Georgia Department of Transportation

Interoffice Memo
Office of Design Policy & Support

DATE: **11/6/2018**

FILE: P.I.# 0007386
Lowndes County / GDOT District 4 - Tifton
I-75 @ CR 274/Lake Park-Bellville Road - Phase II

FROM: for Brent Story, State Design Policy Engineer

TO: SEE DISTRIBUTION

SUBJECT: **APPROVED REVISED CONCEPT REPORT**

Attached is the approved Revised Concept Report for the above subject project.

Attachment

Distribution:
- Hiral Patel, Director of Engineering
- Joe Carpenter, Director of P3
- Albert Shelby, Director of Program Delivery
- Darryl VanMeter, Assistant Director of P3/State Innovative Delivery Administrator
- Kim Nesbitt, Program Delivery Administrator
- Bobby Hilliard, Program Control Administrator
- Paul Tanner, State Transportation Planning Administrator
- Eric Duff, State Environmental Administrator
- Bill DuVall, State Bridge Engineer
- Andrew Heath, State Traffic Engineer
- Angela Robinson, Financial Management Administrator
- Erik Rohde, State Project Review Engineer
- Monica Flournoy, State Materials Engineer
- Patrick Allen, State Utilities Engineer
- Eric Conklin, State Transportation Data Administrator
  - Attn: Systems & Classification Branch
- Benny Walden, Statewide Location Bureau Chief
- Ritchie Swindell, District Engineer
- Tim Warren, District Preconstruction Engineer
- Stacy Aultman, District Utilities Manager
- Cleopatra James, Project Manager
- BOARD MEMBER - 8th Congressional District

DEPARTMENT OF TRANSPORTATION
STATE OF GEORGIA
REVISED PROJECT CONCEPT REPORT

Project Type: Interchange Reconstruction
P.I. Number: 0007386
GDOT District: 4
County: Lowndes
Federal Route Number: I-75
State Route Number: N/A
Project Number: *CSNHS-0007-00(386)*

This project proposes the reconstruction of the interchange with roundabouts at the ramp termini instead of signals. The traffic volumes have decreased enough to not warrant signals and the intersection sight distance, for the design speed, cannot be met without significant impacts to properties in the vicinity.

Submitted for approval:

Tonia P. Brown, PE — 7/13/2018
Consultant Designer & Firm - *JACOBS Engineering Group, Inc.* — Date

Kimberley W. Nesbitt — 8-1-2018
State Program Delivery Administrator — Date

Clinton B. Ford C.L.B. — 7/31/18
GDOT Project Manager — Date

Recommendation for approval:

Eric Duff*/EKP — 3/29/2018
State Environmental Administrator — Date

Andrew Pearson*/EKP — 4/3/2018
FOR State Traffic Engineer — Date

Bill DuVall*/EKP — 4/24/2018
State Bridge Engineer — Date

Ritchie Swindell*/EKP — 4/9/2018
District Engineer — Date

☒ MPO Area: This project is consistent with the MPO adopted Regional Transportation Plan (RTP)/Long Range Transportation Plan (LRTP).

☐ Rural Area: This project is consistent with the goals outlined in the Statewide Transportation Plan (SWTP) and/or is included in the State Transportation Improvement Program (STIP).

Cindy Van Dyke*/EKP — 3/28/2018
State Transportation Planning Administrator — Date

*-Recommendation on File

PLANNING, APPROVED CONCEPT, AND BACKGROUND

Project Justification Statement: The County Road (CR) 274/Bellville Road (Exit 2) interchange facility spans a six-lane section of I-75 just north of the Georgia/Florida state line (see Figure 1: Project Location Map). This interchange currently has operational, ~~safety,~~ and capacity deficiencies. The substandard shoulders under the bridge and clearance are a result of previous widening projects of I-75. The existing bridge is constructed on vertical alignment that does not provide the necessary stopping sight distance for the design speed and limits the intersection sight distance at the ramp terminals for existing traffic from both directions. There is a need to accommodate future traffic volumes, provide adequate storage, and provide sufficient acceleration/deceleration distances for traffic entering and exiting I-75. The proposed improvements would span the approximate 0.56-mile distance along CR 274/Bellville Road (Exit 2) to accommodate the bridge reconstruction and would also include the distance required to lengthen and widen the entrance and exit ramps to and from I-75 at this interchange. The purpose of this project is to provide interchange modifications and overpass improvements to eliminate the operational and capacity deficiencies, as well as provide the adequate ~~and safe~~ clearance for vehicles driving under the bridge along I-75.

Existing conditions:

- Typical Section:
  - I-75 – six-lane rural interstate with limited access
  - Site 1 - CR 274/Bellville Road/Lake Park Road – two-lane rural undivided
- Posted speed:
  - I-75 – 70 mph
  - Site 1 - CR 274/Bellville Road/Lake Park Road – 45 mph
- Minimum radius for curve:
  - I-75 – N/C
  - Site 1 - CR 274/Bellville Road/Lake Park Road – 1534'
- Maximum super-elevation rate of curve:
  - I-75 – N/C
  - Site 1 - CR 274/Bellville Road/Lake Park Road – 8%
- Maximum grade:
  - I-75 -- 4%
  - Site 1 - CR 274/Bellville Road/Lake Park Road – 4.8%
  - Driveways 10%
- Width of right of way:
  - I-75 -300-350 feet
  - Site 1 - CR 274/Bellville Road/Lake Park Road – 80-100 feet
- Limits of Access:
  - Site 1 – East of I-75: Eastbound - 400' Westbound – 225'
    West of I-75: Eastbound - 450' Westbound – 225'

- Major structures:
  - I-75 –N/A
  - Site 1 - CR 274/Bellville Road/Lake Park Road -- Length: 208', span: 70'; deck width 34.10'; sufficiency rating: 62.09; Structure ID#: 185-0032-0
- Major interchanges or intersections along the project:
  - I-75 – NC
  - Site 1 - CR 274/Bellville Road/Lake Park Road -- None
- Existing length of roadway segment and the beginning mile logs for each county segment.
  - I-75 – N/A
  - Site 1 - CR 274/Bellville Road/Lake Park Road – 0.52 mi./ starting at MP 0.90.

Description of the <u>approved</u> concept:

As approved in the 2010 Concept Report, GDOT Project No. CSNHS-0007-00(386), P.I. No. 0007386, Lowndes County, would provide interchange modifications and overpass improvements on I-75 at five locations in Lowndes County, including I-75 at CR 274/Bellville Road (Exit 2)(Site 1), I-75 at SR 376/Lakes Boulevard (Exit 5)(Site 2), I-75 at CR 783/Loch Laurel Road overpass at MP 6.12 (Site 3), I-75 at SR 31/Madison Highway (Exit 11)(Site 4), and I-75 at SR 133/N St. Augustine Road (Exit 18)(Site 5). However, the only two projects moving forward are those at Exit 2 (Site 1) and Exit 11 (Site 4). To advance these interchanges and overpass separately through the design process, each of these has been provided its own P.I. number. All work activities not associated with the interchange reconstruction at CR 274/Bellville Road have been eliminated from P.I. No. 0007386. The Transportation Improvement Plan (TIP) has been updated as of December 2016 to reflect P.I. No. 0007386's CST/UTL phases occurring in FY 2017.

Site 1: Project CSNHS-0007-00(386) would begin at exit #2 Bellville Rd./Lake Park Rd. The existing bridge (CR274/Lake Park Rd./Bellville Road over I-75) will be replaced. The new bridge will be longer to accommodate future widening of I-75, and will be wider to provide a three-lane facility with a center turn lane for left-turn bay storage. The existing bridge is constructed on vertical alignment that does not provide the necessary stopping sight distance for the proposed 45 mph design speed, and limits the intersection sight distance at the ramp terminals for exiting traffic from both directions. The typical section of the bridge and the cross-road is a rural section with a 10' paved outside shoulder to accommodate a disabled tractor-trailer. The vertical alignment of the bridge will be improved to match the 45 MPH speed of Bellville Road. A minimum of 150' of turn lane storage will be provided at the ramp intersections; and channelized right turn lanes will be provided for traffic turning onto the interstate on-ramps. The entrance and exit ramps to and from I-75 will be lengthened and widened to accommodate future traffic volumes, provide adequate storage, and provide sufficient acceleration /deceleration distances for entering and exiting traffic. Additional limit of access will be acquired to comply with current DOT policy.

Site 1:

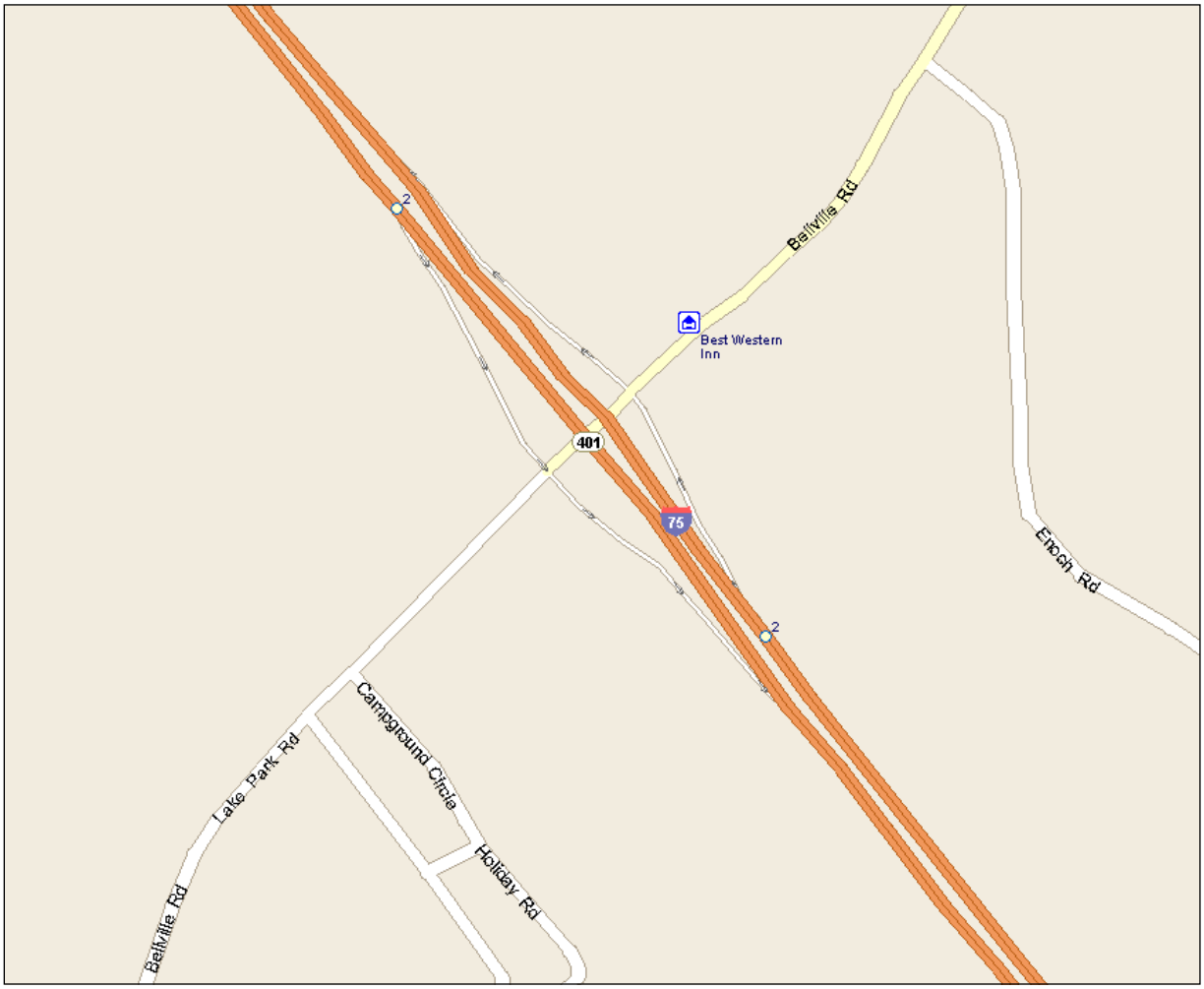

Federal Oversight: ☐ PoDi ☒ Exempt ☐ State Funded ☐ Other

Projected Traffic as shown in the approved Concept Report: ADT or AADT
Open Year (2014): 5800 Design Year (2034): 9050

Updated Traffic: ADT or AADT 24 HR T: 58.5 %
Open Year (2022): 5100 Design Year (2042): 8400

Functional Classification (Mainline):
I-75/SR 401 – Rural Interstate
CR 274/Bellville Road/Lake Park Road – Rural Major Collector

VE Study anticipated: ☐No ☐ Yes ☒ Completed – Date: 8/31/2007
VE Implementation letter is attached.

PROPOSED REVISIONS

Approved Features:	Proposed Features:
• **Typical Section** The proposed typical section for CR 274 / Bellville Road is a rural section with a 12-foot through lane in each direction, a variable width flushed or raised median, and a paved outside shoulder. The proposed bridge is four lanes wide with an 8-foot paved outside shoulder.	• **Typical Section** In addition to the approved rural section along CR 274 / Bellville Road, single lane roundabouts with an inscribed circle diameter (ICD) of 155 feet and urban shoulders will be added at both the southbound and northbound ramp termini with CR 274 / Bellville Road. The bridge will consist of two 20-foot lanes (one in each direction) with a 6-foot raised median and 5.5-foot sidewalk.
• **Project Termini** The center of the bridge roughly divides the project limits in half, such that approximately 0.28 mile of the project is west of the bridge and 0.28 mile is east of the bridge.	• **Project Termini** The project termini were extended east and west to accommodate staging. The center of the bridge roughly divides the project limits in half, such that approximately 0.30 mile of the project is west of the bridge and 0.30 mile is east of the bridge.
• **Changes in right-of-way limits which may affect the analysis of:** o No History concerns o No Archaeological concerns o 3 wetland impacts o 1 open water	• **Changes in right-of-way limits which may affect the analysis of:** o Historic resources – no effect anticipated o Endangered species – no effect anticipated o Archaeological resources – no effect anticipated o Wetlands & Open waters – anticipate impacts based on previous results and proposed limited change in footprint. o Streams or their buffers - anticipate impacts based on previous results and proposed limited change in footprint o Air quality – no effect anticipated o Noise studies – no effect anticipated
• **Access Control** <u>East of I-75:</u> Eastbound - 400',Westbound – 225' <u>West of I-75:</u> Eastbound - 450', Westbound – 225' *Design Variance - none required.*	• **Access Control** <u>East of I-75:</u> Eastbound - 475',Westbound – 480' <u>West of I-75:</u> Eastbound - 150', Westbound – 280' *Design Variance for a Break in Access Control needed for driveways less than 300' from ramp termini.*

Reason(s) for change:
- Signals do not meet warrant requirements due to a decrease in traffic volumes.
- Intersection sight distance cannot be met for the current design speed without significant impacts to the surrounding properties.

Design Variances and/or Exceptions needed: A design variance for a break in access control was approved on 11/22/2017. The design variance was recommended due to the adverse effects caused to commercial properties within the project limits, including displacements, to meet the 300-ft Minimum Access Control requirement in the GDOT Design Policy Manual, current edition.

ENVIRONMENTAL AND PERMITS

Potential environmental impacts of proposed revision:
Environmental impacts are not anticipated to change in a manner that would alter decision making. Resources previously determined to have impacts are anticipated to continue to have impacts due to the proposed revised footprint of the project remaining similar, with the exception of revised cut and fill limits. Reevaluations of special studies memos will be completed and captured in the Categorical Exclusion (CE) Document.

Have proposed revisions been reviewed by environmental staff? ☐ No ☒ Yes

Environmental responsibilities (Studies/Documents/Permits): Consultants will complete the special studies reevaluations, the change re-evaluation memo for the Environmental Document, and the permit applications for acceptance by GDOT. GDOT will transmit the required documents to the agencies for signatures/concurrence.

Air Quality:

Is the project located in an Ozone Non-attainment area?	☒ No	☐ Yes
Is a Carbon Monoxide hotspot analysis required?	☒ No	☐ Yes

Due to the proposed roundabouts, it is anticipated that a CO hotspot analysis would not be required, since there would not be a signalized intersection along the corridor.

Water Quality Requirements: No changes to the water quality requirements are anticipated.

Environmental Comments and Information:

NEPA: An Environmental Reevaluation will need to be completed.

Ecology: An Ecology addendum will need to be conducted based on the revised project plans and footprint due to roundabouts.

Archeology: An Archaeology addendum will need to be conducted based on the revised project plans and footprint due to roundabouts. The need for a field survey will be evaluated up completion of final plans. No effects were identified previously.

History: A History addendum will need to be conducted based on the revised project plans and footprint due to roundabouts. No effects were identified previously.

Air Quality: An Air Quality analysis update will need to be conducted based on the revised project plans and footprint due to roundabouts. No effects were found previously.

Noise Effects: Noise Impacts analysis will need to be conducted based on the revised project plans and footprint due to roundabouts. No effects were found previously.

Public Involvement: A Public Information Open House was conducted with the updated project designs on September 7, 2017.

PROJECT COST AND ADDITIONAL INFORMATION

Item	Estimated Cost	Date of Estimate	Funded By
Preliminary Engineering (PE):	$7,387,421.52	02/03/2006	Federal/Q05
Environmental Mitigation:	$88,720.00	04/17/2018	
Base Construction Cost:	$20,573,728.77		
Engineering and Inspection:	$1,028,686.44		
Contingencies:	$1,080,120.76		
Liquid AC Adjustment:	$413,388.90		
Total Construction Cost:	$23,095,924.87	07/12/2018	State/HB170
Right-of-Way:	$13,250,000.00	03/6/2017	Federal/Z001
Utilities (reimbursable costs):	$1,546,600.00	03/30/2018	State/HB170
TOTAL PROJECT COST:	~~$68,464,591.26~~ $45,368,667 (NORWOOD)		

Recommendation: It is recommended that the proposed revision to the concept be approved for implementation.

Comments: This project is included in the Georgia Oversized Truck Routes.

Attachments:

- Project Location Map
- Detailed Cost Estimates:
  - Revisions to Programmed Costs including Contingency Summary
  - Total Liquid AC Adjustment spreadsheet
  - Job Estimate Report
  - Revised Utility Cost Estimate
- Project Layout
- Typical Sections
- Approved Design Variance
- Environmental Water Mitigation Costs & Worksheet
- Approved Traffic Diagrams
- Signal Warrant Analysis
- Roundabout Analysis
- Stakeholder Meeting - GDOT Response Letter & Sign-In Sheet
- Public Information Open House (PIOH) Response Letter & Summary
- Executed Lighting Agreement
- Value Engineering Implementation Letter

APPROVALS

Concur: Hiral Patel
Director of Engineering

Approve: Margaret B. Pickel — 11·1·18
Chief Engineer — Date

Project Location Map

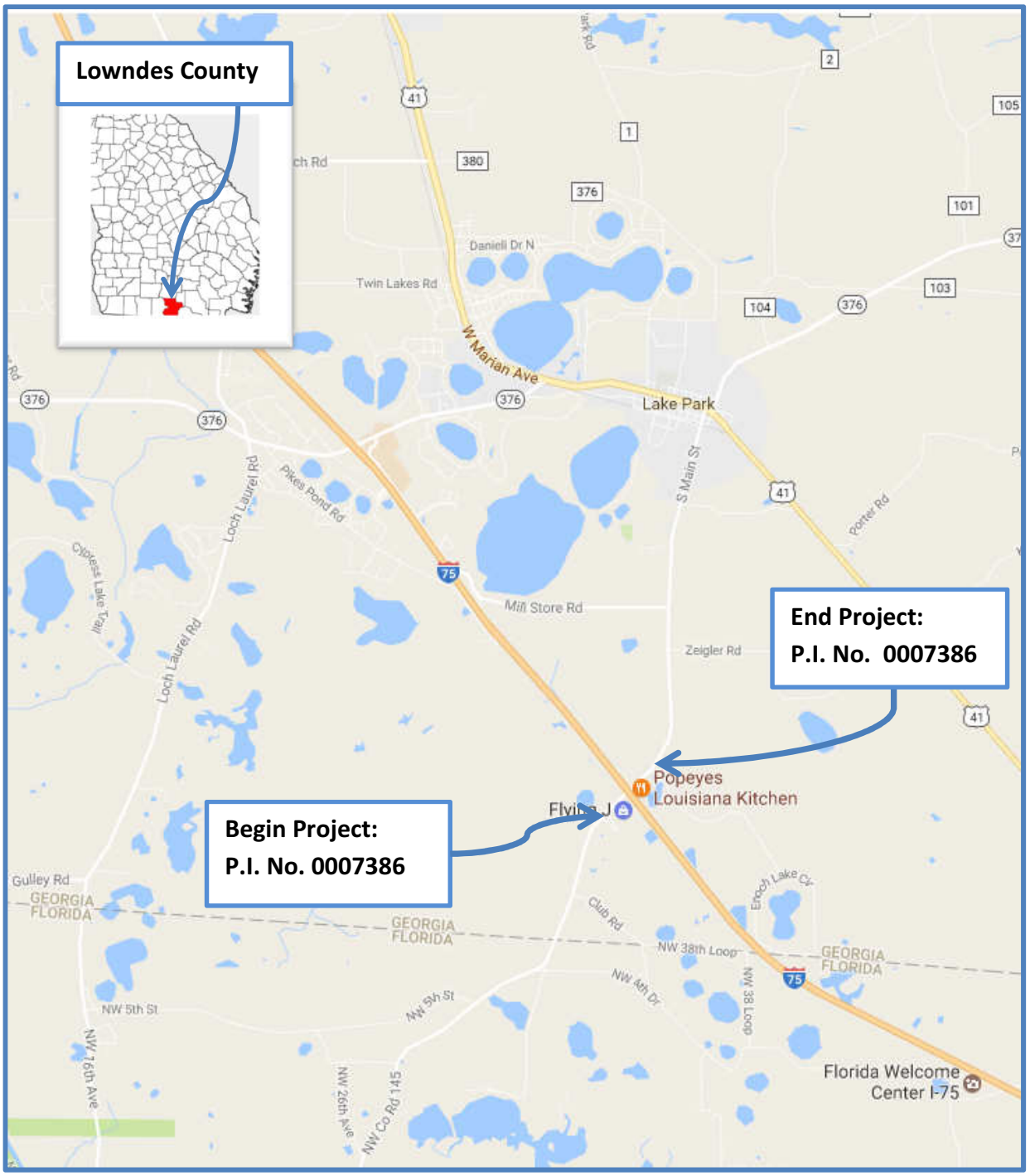

DEPARTMENT OF TRANSPORTATION
STATE OF GEORGIA

INTERDEPARTMENT CORRESPONDENCE

FILE P.I. No. **0007386**

OFFICE Program Delivery

PROJECT DESCRIPTION

I-75 @ CR 274/Lake Park-Bellville Road-Phase II

DATE July 12, 2018

From: Kimberly W. Nesbitt, State Program Delivery Administrator

To: Lisa L. Myers, State Project Review Engineer
via Email Mailbox: **CostEstimatesandUpdates@dot.ga.gov**

Subject: REVISIONS TO PROGRAMMED COSTS

PROJECT MANAGER Cleopatra James

MGMT LET DATE 2/15/2019

MGMT ROW DATE 5/17/2017

PROGRAMMED COSTS (TPro W/OUT INFLATION)			**LAST ESTIMATE UPDATE**	
CONSTRUCTION	$	19,664,630.18	DATE	11/7/2017
RIGHT OF WAY	$	13,250,000.00	DATE	3/6/2017
UTILITIES	$	1,270,000.00	DATE	11/7/2017

REVISED COST ESTIMATES

CONSTRUCTION*	$	23,095,924.87
RIGHT OF WAY	$	
UTILITIES	$	1,546,600.00

*Cost Contains 5 % Contingency

REASONS FOR COST INCREASE AND CONTINGENCY JUSTIFICATION:

Annual Cost Estimate Update. A 5% contingency was added to the Construction estimate for risk at the FFPR phase. The cost increase for Construction is due to quantity increases in pavement and embankment, and an increase in the bridge beam unit cost from $90/SF to $175/SF. The cost increase in Utilities is due to the best available information at the current stage. Unforseen prior rights information may be provided by the Utility Company at a later date that could cause some non-reimbursable costs to shift to the reimbursable cost column.

CONTINGENCY SUMMARY

A.	**CONSTRUCTION COST ESTIMATE:**	$ 20,573,728.77	Base Estimate From CES	
B.	**ENGINEERING AND INSPECTION (E & I):**	$ 1,028,686.44	Base Estimate (A) x	5 %
C.	**CONTINGENCY:**	$ 1,080,120.76	Base Estimate (A) + E & I (B) x See % Table in "Risk Based Cost Estimation" Memo	5 %
D.	**TOTAL LIQUID AC ADJUSTMENT:**	$ 413,388.90	Total From Liquid AC Spreadsheet	
E.	**CONSTRUCTION TOTAL:**	$ **23,095,924.87**	(A + B + C + D = E)	

REIMBURSABLE UTILTY COSTS

UTILITY OWNER	REIMBURSABLE COST
Colquitt EMC	$ 605,000.00
Lowndes County Commission	$ 941,600.00
TOTAL	**$ 1,546,600.00**

ATTACHMENTS: (File Copy in the Project Cost Estimate Folder)

Detailed Cost Estimate Printout
Liquid AC Adjustment Spreadsheet
Utilities Cost Estimate Update

Consultant Validation of Final QC/QA for Construction Cost Estimate Used in This Revision To Programmed Costs

COMPANY NAME: JACOBS Engineering Group, Inc.

VALIDATION OF FINAL QC/QA

PRINTED NAME: Tonia P. Brown

TITLE: Project Engineer

SIGNATURE: Tonia P. Brown.

DATE: 7/12/2018

PROJ. NO.	CSNHS-0007-00(386)	CALL NO.	0/00/2016
P.I. NO.	0007386		
DATE	7/12/2018		

INDEX (TYPE)	**DATE**	**INDEX**
REG. UNLEADED	Jul-18	$ 2.714
DIESEL		$ 3.083
LIQUID AC		$ 507.00

Link to AC Index:
http://www.dot.ga.gov/PS/Materials/AsphaltFuelIndex

LIQUID AC ADJUSTMENTS

PA=[((APM-APL)/APL)]xTMTxAPL

Asphalt

Price Adjustment (PA)				**402152.4**	**$ 402,152.40**
Monthly Asphalt Cement Price month placed (APM)	Max. Cap	60%	$	811.20	
Monthly Asphalt Cement Price month project let (APL)			$	507.00	
Total Monthly Tonnage of asphalt cement (TMT)				1322	

ASPHALT	**Tons**	**%AC**	**AC ton**
Leveling	340	5.0%	17
12.5 OGFC		5.0%	0
12.5 mm	7400	5.0%	370
9.5 mm SP		5.0%	0
25 mm SP	8600	5.0%	430
19 mm SP	10100	5.0%	505
	26440		**1322**

BITUMINOUS TACK COAT

Price Adjustment (PA)			**$**	**11,236.50**	**$ 11,236.50**
Monthly Asphalt Cement Price month placed (APM)	Max. Cap	60%	$	811.20	
Monthly Asphalt Cement Price month project let (APL)			$	507.00	
Total Monthly Tonnage of asphalt cement (TMT)				36.93786793	

Bitum Tack Gals	gals/ton	tons
8600	232.8234	36.9378679

BITUMINOUS TACK COAT (surface treatment)

Price Adjustment (PA)				**0**	**$ -**
Monthly Asphalt Cement Price month placed (APM)	Max. Cap	60%	$	811.20	
Monthly Asphalt Cement Price month project let (APL)			$	507.00	
Total Monthly Tonnage of asphalt cement (TMT)				0	

Bitum Tack	SY	Gals/SY	Gals	gals/ton	tons
Single Surf. Trmt.		0.20	0	232.8234	0
Double Surf.Trmt.		0.44	0	232.8234	0
Triple Surf. Trmt		0.71	0	232.8234	0
					0

TOTAL LIQUID AC ADJUSTMENT **$ 413,388.90**

Detailed Cost Estimate

Job ID: 0007386

Detailed Cost Estimate

Time Processed: Jul-13-2018 02:53:54 PM

JOB NUMBER: 0007386
SPEC YEAR: 13
ITEM HISTORY: ALL_2018Q1_24MO
DESCRIPTION: LOWNDES COUNTY SITE 1
ASSIGNED CONTROL GROUP: JACOBS ENGINEERING CONSULTANT
FED/STATE PROJECT NUMBER: CSNHS-0007-00(386)

ITEMS FOR JOB 0007386

-

Line Number	Item	Quantity	Units	Price	Description	Amount
0012	205-0001	151400.00	CY	$6.01966	UNCLASS EXCAV	$911,376.52
0013	206-0002	165800.00	CY	$8.00000	BORROW EXCAV, INCL MATL	$1,326,400.00
0029	400-3624	1700.00	TN	$150.00000	ASPH CONC 12.5 MM PEM,GP2,INCL P-MBM&HL	$255,000.00
0030	402-1812	340.00	TN	$109.50560	RECYL AC LEVELING,INC BM&HL	$37,231.90
0050	402-3600	3600.00	TN	$115.31000	RECY AC 12.5,SMA,GP2 ON,INCLP-,BM&HL	$415,116.00
0060	432-0206	1100.00	SY	$8.83018	MILL ASPH CONC PVMT/ 1.50 DEP	$9,713.20
0065	433-1000	450.00	SY	$179.85092	REINF CONC APPROACH SLAB	$80,932.91
0075	441-0018	3000.00	SY	$53.58337	DRIVEWAY CONCRETE, 8 IN TK	$160,750.11
0080	441-0104	2000.00	SY	$29.67510	CONC SIDEWALK, 4 IN	$59,350.20
0089	441-0740	430.00	SY	$38.06830	CONC MEDIAN, 4 IN	$16,369.37
0095	441-4050	390.00	SY	$67.00000	CONC VALLEY GUTTER,W/CURB,8	$26,130.00
0103	441-5008	490.00	LF	$16.83851	CONC HEADER CURB, 6 IN, TP 7	$8,250.87
0104	441-5025	690.00	LF	$17.61000	CONC HEADER CURB, 4, TP 9	$12,150.90
0115	446-1100	13600.00	LF	$3.90464	PVMT REF FAB STRIPS, TP2,18 INCH WIDTH	$53,103.10
0125	456-2015	1.00	GLM	$4,328.08360	INDENT. RUMB. STRIPS - GRND-IN-PL (SKIP)	$4,328.08
0140	500-9999	20.00	CY	$235.38145	CL B CONC,BASE OR PVMT WIDEN	$4,707.63
0155	550-1240	800.00	LF	$56.66133	STM DR PIPE 24,H 1-10	$45,329.06
0170	550-1480	100.00	LF	$115.84933	STM DR PIPE 48,H 1-10	$11,584.93
0180	550-3518	1.00	EA	$665.00000	SAFETY END SECTION 18,STD,6:1	$665.00
0215	550-4236	2.00	EA	$1,262.97029	FLARED END SECT 36 IN, ST DR	$2,525.94
0279	641-2200	980.00	LF	$31.00000	DBL FACED GUARDRAIL, TP W	$30,380.00
0289	641-5020	8.00	EA	$2,475.00000	GUARDRL, ANCHOR, TP 12B,31 IN, FLR, E/A	$19,800.00
0290	641-6005	2.00	EA	$6,375.00000	GUARDRAIL TERM, TP 10D, 31 IN	$12,750.00
0304	668-1100	13.00	EA	$2,926.52517	CATCH BASIN, GP 1	$38,044.83
0489	169-0005	3.00	EA	$100,000.00000	BIORETENTION BASIN	$300,000.00
0490	169-0010	3.00	EA	$20,000.00000	BIOSLOPE	$60,000.00
0494	169-0020	7.00	EA	$50,000.00000	ENHANCED DRY SWALE	$350,000.00
0715	639-1535	11.00	EA	$3,000.00000	TREATED TIMBER POLE, CL 5, 35'	$33,000.00
0720	639-2002	1150.00	LF	$3.80890	STEEL WIRE STRAND CABLE, 3/8	$4,380.24
0725	639-4004	2.00	EA	$9,736.20978	STRAIN POLE, TP IV	$19,472.42
0750	647-2140	2.00	EA	$1,700.00000	PULL BOX, PB-4	$3,400.00
0795	939-2237	10.00	EA	$400.00000	GBIC, TYPE D	$4,000.00
0800	939-2300	10.00	EA	$1,000.00000	FIELD SWITCH, TYPE A	$10,000.00
0845	610-5815	6.00	EA	$2,500.00000	REM HIGHMAST LIGHT TOWER	$15,000.00
0850	610-6865	2.00	EA	$1,000.00000	REM SERVICE POLE RISER	$2,000.00
0924	540-1101	1.00	LS	$300,000.00000	REM OF EX BR, STA NO - 117+29.16	$300,000.00
Total						**$4,643,243.21**

001 - ROADWAY

Line Number	Item	Quantity	Units	Price	Description	Amount
0005	150-1000	1.00	LS	$1,500,000.00000	TRAFFIC CONTROL - CSNHS-0007-00(386)	$1,500,000.00
0008	150-5010	10.00	EA	$8,085.89000	TRAF CTRL,PORTABLE IMPACT ATTN	$80,858.90
0009	153-1300	1.00	EA	$104,979.03000	FIELD ENGINEERS OFFICE TP 3	$104,979.03
0010	201-1500	1.00	LS	$2,100,000.00000	CLEARING & GRUBBING - CSNHS-0007-00(386)	$2,100,000.00
0014	207-0203	1900.00	CY	$66.32000	FOUND BKFILL MATL, TP II	$126,008.00
0020	310-1101	44900.00	TN	$23.01000	GR AGGR BASE CRS, INCL MATL	$1,033,149.00
0024	318-3000	1200.00	TN	$38.68000	AGGR SURF CRS	$46,416.00
0035	402-3121	8600.00	TN	$72.95000	RECYL AC 25MM SP,GP1/2,BM&HL	$627,370.00
0040	402-3130	2100.00	TN	$85.91000	RECYL AC 12.5MM SP,GP2,BM&HL	$180,411.00
0045	402-3190	10100.00	TN	$76.01000	RECYL AC 19 MM SP,GP 1 OR 2 ,INC BM&HL	$767,701.00

Line Number	Item	Quantity	Units	Price	Description	Amount
0055	413-0750	8600.00	GL	$3.12759	TACK COAT	$26,897.27
0070	439-0024	20700.00	SY	$89.60000	PLN PC CONC PVMT CL3 11 THK	$1,854,720.00
0085	441-0301	4.00	EA	$2,043.48000	CONC SPILLWAY, TP 1	$8,173.92
0090	441-0748	1700.00	SY	$45.53000	CONC MEDIAN, 6 IN	$77,401.00
0100	441-5002	930.00	LF	$13.69000	CONC HEADER CURB, 6, TP 2	$12,731.70
0105	441-6222	4700.00	LF	$17.97375	CONC CURB & GUTTER/ 8X30TP2	$84,476.63
0110	441-6740	1500.00	LF	$18.81802	CONC CURB & GUTTER/ 8X30 TP7	$28,227.03
0120	456-2012	1.00	GLM	$6,041.31912	INTENT. RUMB. STRIPS - GRND-IN-PL (CONT)	$6,041.32
0130	500-3101	100.00	CY	$629.28495	CLASS A CONCRETE	$62,928.50
0135	500-3800	20.00	CY	$1,002.88301	CL A CONC, INCL REINF STEEL	$20,057.66
0145	511-1000	8000.00	LB	$1.13446	BAR REINF STEEL	$9,075.68
0150	550-1180	1500.00	LF	$49.34443	STM DR PIPE 18,H 1-10	$74,016.65
0160	550-1300	1100.00	LF	$64.15699	STM DR PIPE 30,H 1-10	$70,572.69
0165	550-1360	700.00	LF	$74.27402	STM DR PIPE 36,H 1-10	$51,991.81
0175	550-2180	170.00	LF	$40.69005	SIDE DR PIPE 18,H 1-10	$6,917.31
0185	550-3618	1.00	EA	$516.01636	SAFETY END SECTION 18,SD,6:1	$516.02
0190	550-4118	3.00	EA	$498.18831	FLARED END SECT 18 IN, SIDE DR	$1,494.56
0195	550-4215	2.00	EA	$1,000.00000	FLARED END SECT 15 IN, ST DR	$2,000.00
0200	550-4218	10.00	EA	$636.03073	FLARED END SECT 18 IN, ST DR	$6,360.31
0205	550-4224	1.00	EA	$795.13815	FLARED END SECT 24 IN, ST DR	$795.14
0210	550-4230	2.00	EA	$869.66556	FLARED END SECT 30 IN, ST DR	$1,739.33
0220	550-4418	1.00	EA	$1,107.72890	FLARED END SECT 18 IN, SLP DR	$1,107.73
0225	576-1015	320.00	LF	$37.00000	SLOPE DRAIN PIPE, 15 IN	$11,840.00
0230	576-1018	30.00	LF	$51.61153	SLOPE DRAIN PIPE, 18 IN	$1,548.35
0235	610-9099	1.00	LS	$4,000.00000	REM WINGWALLS/PARAPETS, STA - STA 1126+73.58	$4,000.00
0240	610-9099	1.00	LS	$4,000.00000	REM WINGWALLS/PARAPETS, STA - STA 1986+70.71	$4,000.00
0245	610-9099	1.00	LS	$4,000.00000	REM WINGWALLS/PARAPETS, STA - STA 1986+70.71	$4,000.00
0250	611-9000	2.00	EA	$775.00000	CAPPING MINOR STRUCTURE	$1,550.00
0255	620-0100	3000.00	LF	$30.28996	TEMP BARRIER, METHOD NO. 1	$90,869.88
0260	632-0003	4.00	EA	$11,767.23200	CHANGEABLE MESS SIGN,PORT,TP 3	$47,068.93
0265	634-1200	72.00	EA	$138.41774	RIGHT OF WAY MARKERS	$9,966.08
0270	641-1100	80.00	LF	$78.31094	GUARDRAIL, TP T	$6,264.88
0275	641-1200	5100.00	LF	$19.33888	GUARDRAIL, TP W	$98,628.29
0280	641-5001	15.00	EA	$1,173.66133	GUARDRAIL ANCHORAGE, TP 1	$17,604.92
0285	641-5015	4.00	EACH	$2,971.87000	GUARDRL ANCHOR, TP 12A, 31 IN, TANG, E/A	$11,887.48
0295	643-0010	9200.00	LF	$6.00000	FIELD FENCE WOVEN WIRE AS DIRECTED	$55,200.00
0300	643-8210	450.00	LF	$5.00000	WOOD FENCE -	$2,250.00
0305	668-2100	20.00	EA	$2,478.13793	DROP INLET, GP 1	$49,562.76
0310	668-2110	30.00	LF	$354.78761	DROP INLET, GP 1, ADDL DEPTH	$10,643.63
0315	668-2231	4.00	EA	$4,421.18000	DROP INLET,GP 1,MOD TP M-1	$17,684.72
0320	668-5000	1.00	EA	$2,097.08934	JUNCTION BOX	$2,097.09
0325	668-8012	160.00	SF	$54.87000	SAFETY GRATE, TP 2	$8,779.20
ROADWAY Total						**$9,430,581.40**

002 - BRIDGE

Line Number	Item	Quantity	Units	Price	Description	Amount
0925	543-9000	1.00	LS	$2,807,437.50000	CONSTR OF BRIDGE COMPLETE - BRIDGE OVER I-75	$2,807,437.50
BRIDGE Total						**$2,807,437.50**

003 - RETAINING WALL

Line Number	Item	Quantity	Units	Price	Description	Amount
0810	627-1010	4500.00	SF	$42.94340	MSE WALL FACE, 10 - 20 FT HT, WALL NO - WALL 1	$193,245.30
0815	627-1020	14200.00	SF	$42.66029	MSE WALL FACE, 20 - 30 FT HT, WALL NO - WALL 1	$605,776.12
0820	627-1160	870.00	LF	$243.61472	TRAFFIC BARRIER H, WALL NO - WALL 1	$211,944.81
RETAINING WALL Total						**$1,010,966.23**

005 - PERMANENT EROSION CONTROL

Line Number	Item	Quantity	Units	Price	Description	Amount
0330	441-0204	1200.00	SY	$44.78471	PLAIN CONC DITCH PAVING, 4 IN AS DIRECTED	$53,741.65
0335	603-2180	640.00	SY	$66.87586	STN DUMPED RIP RAP, TP 3, 12 AS DIRECTED	$42,800.55
0340	603-2182	1500.00	SY	$58.41379	STN DUMPED RIP RAP, TP 3, 24 AS DIRECTED	$87,620.69
0345	603-7000	2140.00	SY	$4.35057	PLASTIC FILTER FABRIC	$9,310.22
0350	700-6910	80.00	AC	$958.04489	PERMANENT GRASSING	$76,643.59
0355	700-7000	230.00	TN	$82.41927	AGRICULTURAL LIME	$18,956.43
0360	700-8000	60.00	TN	$599.68960	FERTILIZER MIXED GRADE	$35,981.38
0365	700-8100	3900.00	LB	$2.80741	FERTILIZER NITROGEN CONTENT	$10,948.90

Line Number	Item	Quantity	Units	Price	Description	Amount
0370	711-0600	1800.00	SY	$5.00000	TURF REINFORCING MATTING, TP 6	$9,000.00
0375	716-2000	1800.00	SY	$2.48088	EROSION CONTROL MATS, SLOPES	$4,465.58
PERMANENT EROSION CONTROL Total						**$349,468.99**

006 - TEMPORARY EROSION CONTROL

Line Number	Item	Quantity	Units	Price	Description	Amount
0390	163-0232	38.00	AC	$514.98265	TEMPORARY GRASSING	$19,569.34
0395	163-0240	600.00	TN	$200.57166	MULCH	$120,343.00
0400	163-0300	8.00	EA	$1,637.72465	CONSTRUCTION EXIT	$13,101.80
0405	163-0502	2.00	EA	$495.00000	CONSTR AND REMOVE SILT CONTROL GATE,TP 2	$990.00
0410	163-0503	6.00	EA	$454.35700	CONSTR AND REMOVE SILT CONTROL GATE,TP 3	$2,726.14
0415	163-0520	910.00	LF	$17.08485	CONSTR AND REMOVE TEMP PIPE SLOPE DRAIN	$15,547.21
0420	163-0527	180.00	EA	$506.48626	CNST/REM RIP RAP CKDM,STN P RIPRAP/SN BG	$91,167.53
0425	163-0529	1000.00	LF	$5.38185	CNST/REM TEMP SED BAR OR BLD STRW CK DM	$5,381.85
0430	163-0531	2.00	EA	$17,316.35758	CONSTR & REM SEDIMENT BASIN,TP 1,STA NO- RAMP B 1123+20 & RAMP C 1177+10	$34,632.72
0435	163-0550	24.00	EA	$246.78498	CONS & REM INLET SEDIMENT TRAP	$5,922.84
0440	165-0030	49800.00	LF	$0.77994	MAINT OF TEMP SILT FENCE, TP C	$38,841.01
0445	165-0041	1800.00	LF	$2.26379	MAINT OF CHECK DAMS - ALL TYPES	$4,074.82
0450	165-0060	2.00	EA	$4,458.03519	MAINT OF TEMP SEDIMENT BASIN,STA NO -	$8,916.07
0455	165-0071	500.00	LF	$2.15102	MAINT OF SEDIMENT BARRIER - BALED STRAW	$1,075.51
0460	165-0086	2.00	EA	$117.00000	MAINT OF SILT CONTROL GATE, TP 2	$234.00
0465	165-0087	6.00	EA	$141.65356	MAINT OF SILT CONTROL GATE, TP 3	$849.92
0470	165-0101	16.00	EA	$664.01859	MAINT OF CONST EXIT	$10,624.30
0475	165-0105	24.00	EA	$72.75336	MAINT OF INLET SEDIMENT TRAP	$1,746.08
0480	167-1000	4.00	EA	$415.75532	WATER QUALITY MONITORING AND SAMPLING	$1,663.02
0485	167-1500	36.00	MO	$1,278.38625	WATER QUALITY INSPECTIONS	$46,021.91
0495	171-0030	24900.00	LF	$4.10428	TEMPORARY SILT FENCE, TYPE C	$102,196.57
0500	643-8200	9100.00	LF	$2.34376	BARRIER FENCE (ORANGE), 4 FT	$21,328.22
TEMPORARY EROSION CONTROL Total						**$546,953.86**

007 - SIGNAL

Line Number	Item	Quantity	Units	Price	Description	Amount
0730	647-0220	1.00	LS	$20,000.00000	TRAF SIGNAL INSTALLATION, TEMP	$20,000.00
0735	647-0220	1.00	LS	$20,000.00000	TRAF SIGNAL INSTALLATION, TEMP	$20,000.00
0740	647-0220	1.00	LS	$20,000.00000	TRAF SIGNAL INSTALLATION, TEMP	$20,000.00
0745	682-9950	80.00	LF	$16.00000	DIRECTIONAL BORE - 5"	$1,280.00
0755	647-2170	2.00	EA	$1,585.00000	PULL BOX, PB-7	$3,170.00
0760	682-6222	70.00	LF	$11.03376	CONDUIT, NONMETL, TP 2, 2 IN	$772.36
0765	682-6233	530.00	LF	$5.50000	CONDUIT, NONMETL, TP 3, 2 IN	$2,915.00
0770	682-6540	350.00	LF	$10.00000	CONDUIT, FIBERGLASS, 4 IN	$3,500.00
0775	935-1113	750.00	LF	$10.00000	OUT PLNT FBR OPT CBL,LOOSE TB,SM,24 FBR	$7,500.00
0780	935-3402	2.00	EA	$1,500.00000	FBR OPTIC CLOSURE,FDC(RACK MTD),12 FBR	$3,000.00
0785	935-8000	1.00	LS	$2,000.00000	TESTING	$2,000.00
0790	935-8500	1.00	LS	$3,000.00000	TRAINING	$3,000.00
0805	950-3515	270.00	LF	$50.00000	INSTALL, TELECOM FACIL, COND, BR ATTACH BRIDGE MOUNT	$13,500.00
SIGNAL Total						**$100,637.36**

008 - SIGNING AND MARKING

Line Number	Item	Quantity	Units	Price	Description	Amount
0505	150-0008	6.00	EA	$200.00000	REM/RST EX SP GS, GM, C-IN-PLC	$1,200.00
0510	610-6510	7.00	EA	$585.00000	REM HWY SIGN, OVHD	$4,095.00
0515	610-9310	1.00	LS	$4,000.00000	REM STR SUPPORT, TP - II	$4,000.00
0520	610-9310	1.00	LS	$7,000.00000	REM STR SUPPORT, TP - I	$7,000.00
0525	610-9310	1.00	LS	$4,000.00000	REM STR SUPPORT, TP - II	$4,000.00
0530	610-9310	1.00	LS	$4,000.00000	REM STR SUPPORT, TP - II	$4,000.00
0535	610-9310	1.00	LS	$4,000.00000	REM STR SUPPORT, TP - II	$4,000.00
0540	610-9310	1.00	LS	$4,000.00000	REM STR SUPPORT, TP - II	$4,000.00
0545	636-1033	380.00	SF	$16.66680	HWY SIGNS, TP1MAT,REFL SH TP 9	$6,333.38
0550	636-1036	290.00	SF	$17.00000	HWY SGN,TP1MAT,REFL SH TP 11	$4,930.00
0555	636-1045	50.00	SF	$36.00000	HWY SGN,TP2,REFL SH TP 11	$1,800.00
0560	636-1072	1500.00	SF	$33.00000	HWY SIGNS,ALUM EXTRD PNLS, RS TP 3	$49,500.00
0565	636-2070	800.00	LF	$7.66781	GALV STEEL POSTS, TP 7	$6,134.25
0570	636-2080	370.00	LF	$10.26776	GALV STEEL POSTS, TP 8	$3,799.07
0575	636-2090	50.00	LF	$9.33906	GALV STEEL POSTS, TP 9	$466.95
0580	636-3010	12.00	EA	$495.81975	GROUND-MOUNTED BREAKAWAY SIGN SUPPORT	$5,949.84
0585	636-5010	103.00	EA	$42.00000	DELINEATOR, TP 1	$4,326.00

Line Number	Item	Quantity	Units	Price	Description	Amount
0590	636-5011	4.00	EA	$30.00000	DELINEATOR, TP 1A	$120.00
0595	636-5020	83.00	EA	$28.13753	DELINEATOR, TP 2	$2,335.41
0600	638-1001	1.00	LS	$90,000.00000	STR SUPPORT OVHD SIGN,TP I,STA C0006	$90,000.00
0605	638-1001	1.00	LS	$90,000.00000	STR SUPPORT OVHD SIGN,TP I,STA C0011	$90,000.00
0610	638-1001	1.00	LS	$90,000.00000	STR SUPPORT OVHD SIGN,TP I,STA D0019	$90,000.00
0615	638-1003	1.00	LS	$35,000.00000	STR SUPPORT OVHD,SIGN,TPIIISTA C0001	$35,000.00
0620	638-1003	1.00	LS	$35,000.00000	STR SUPPORT OVHD,SIGN,TPIIISTA D0024	$35,000.00
0625	638-1003	1.00	LS	$35,000.00000	STR SUPPORT OVHD,SIGN,TPIIISTA D0029	$35,000.00
0630	653-0120	8.00	EA	$95.43463	THERM PVMT MARK, ARROW, TP 2	$763.48
0635	653-0210	4.00	EA	$171.63584	THERM PVMT MARK, WORD , TP 1	$686.54
0640	653-1501	13400.00	LF	$0.62972	THERMO SOLID TRAF ST 5 IN, WHI	$8,438.25
0645	653-1502	2700.00	LF	$0.74618	THERMO SOLID TRAF ST, 5 IN YEL	$2,014.69
0650	653-1810	2000.00	LF	$1.78173	THER SLD TRAF STRIPE, 10 IN, W	$3,563.46
0655	653-3501	5000.00	GLF	$0.47082	THERMO SKIP TRAF ST, 5 IN, WHI	$2,354.10
0660	653-6006	240.00	SY	$5.69143	THERM TRAF STRIPING, YELLOW	$1,365.94
0665	654-1001	35.00	EA	$5.43131	RAISED PVMT MARKERS TP 1	$190.10
0670	654-1003	202.00	EA	$4.71672	RAISED PVMT MARKERS TP 3	$952.78
0675	655-7000	2.00	EA	$1,000.00000	PVMT ARROW, PREFORM PLASTIC W/RAISE REFL	$2,000.00
0680	657-1085	7400.00	LF	$6.96000	PRF PL SD PVT MKG,8,B/W,TP PB	$51,504.00
0685	657-1110	1800.00	LF	$12.94000	PRF PL SD PVMT MKG, 11,B/W,TPPB	$23,292.00
0690	657-1244	150.00	LF	$23.37042	PRF PL SD PVMT MKG,24,WH,TPPB	$3,505.56
0695	657-3085	490.00	GLF	$5.29551	PRF PL SK PVMT MKG,8,B/W,TPPB	$2,594.80
0700	657-5003	4.00	EA	$860.00000	PRF PLASTIC PVMT MKG, WORD TP 1, TP PB	$3,440.00
0705	657-5017	6.00	EA	$842.88544	PRF PL PVT MKG,ARW TP2,WH,TPPB	$5,057.31
0710	657-6085	6800.00	LF	$6.40663	PRF PL SD PVMT MKG,8,B/Y,TPPB	$43,565.08
SIGNING AND MARKING Total						**$648,277.99**

009 - LIGHTING

Line Number	Item	Quantity	Units	Price	Description	Amount
0825	441-0004	150.00	SY	$50.00000	CONC SLOPE PAV, 4 IN	$7,500.00
0830	500-3101	140.00	CY	$629.28495	CLASS A CONCRETE	$88,099.89
0835	511-1000	33000.00	LB	$0.93798	BAR REINF STEEL	$30,953.34
0840	682-9950	280.00	LF	$16.00000	DIRECTIONAL BORE - 2"	$4,480.00
0855	681-4352	29.00	EA	$6,000.00000	LT STD, 35' MH, 10' ARM	$174,000.00
0860	681-6200	29.00	EA	$760.00000	LUMINAIRE, TP 2, LED	$22,040.00
0865	682-3428	6400.00	LF	$1.50000	MULT CD CBL, TP RHW, 2-#4-1-#4	$9,600.00
0870	682-3490	4300.00	LF	$6.00000	MULT COND CABLE, TP RHW, 2#10-1#10	$25,800.00
0875	682-3666	4400.00	LF	$3.50000	MULT COND CABLE,TP RHH/RHW,3-#6	$15,400.00
0880	682-6222	10200.00	LF	$6.05000	CONDUIT, NONMETL, TP 2, 2 IN	$61,710.00
0885	682-6233	480.00	LF	$6.30000	CONDUIT, NONMETL, TP 3, 2 IN	$3,024.00
0890	682-6321	1200.00	LF	$27.00000	CONDUIT/ENCASED/TP 1, 2 1-WAY	$32,400.00
0895	682-9010	2.00	EA	$640.00000	SVC POLE RISER	$1,280.00
0900	682-9020	29.00	EA	$2,085.00000	ELEC JCT BOX	$60,465.00
0905	682-9023	4.00	EA	$300.00000	ELEC JCT BX,GALVANIZED, SIZE - 10 IN X 12 IN X 8 IN MIN.	$1,200.00
0910	683-1101	17.00	EA	$22,330.00000	LIGHT TOW/STEL/100'MH/LW EQUIP	$379,610.00
0915	683-7000	68.00	EA	$1,700.00000	HIGH MAST LUM, 4K, TP II MED, 245 W, LED REPLACE WITH 252 W	$115,600.00
0920	683-9025	1.00	EA	$3,000.00000	LOWERING DEVICE POWER SUPPLY UNIT	$3,000.00
LIGHTING Total						**$1,036,162.23**

TOTALS FOR JOB 0007386

ITEMS COST:	$20,573,728.77
COST GROUP COST:	$0.00
ESTIMATED COST:	$20,573,728.77
CONTINGENCY PERCENT:	0.00%
ENGINEERING AND INSPECTION:	0.00%
ESTIMATED COST WITH CONTINGENCY AND E&I:	$20,573,728.77

File Location: Div of Preconstruction > CES

CONFIDENTIALITY NOTICE: This document may contain confidential and/or privileged information. Any unauthorized duplication, disclosure,

DEPARTMENT OF TRANSPORTATION
STATE OF GEORGIA

INTERDEPARTMENT CORRESPONDENCE

FILE

Project No: **CSNHS-0007-00(386)** Office: Tifton
County **LOWNDES** Date: March 30, 2018
P.I. # **0007386**

Description: **I-75 @ CR 274/Lake Park-Bellville Road-Phase II**

EXIT 2

FROM Stacy Aultman., District Utilities Engineer

TO Cleopatra James, Project Manager

SUBJECT **REVISED UTILITY COST ESTIMATE**

A review of utilities located on the above referenced project has been conducted based on the latest available plans.. Listed below is a breakdown of the anticipated reimbursable and non-reimbursable cost.

Utility Owner	Reimbursable	Non-Reimbursable	Estimate Based on
AT&T/ Bellsouth	$0.00	$50,000.00	Site Visit / Available Drawings
Colquitt EMC	$605,000.00	$0.00	Site Visit / Available Drawings
Lowndes County Commission **	$941,600.00	$0.00	Site Visit / Available Drawings
Windsream Communications	$0.00	$10,000.00	Site Visit / Available Drawings
	$0.00	$0.00	
	$0.00	$0.00	
	$0.00	$0.00	
	$0.00	$0.00	
	$0.00	$0.00	
	$0.00	$0.00	
	$0.00	$0.00	
Total 100.00%	$1,546,600.00	$ 60,000 .00	
Department Responsibility 100.00%	$1,546,600.00		
Local Sponsor Responsibility 0.00%	$ 0.00	$ 0.00	PFA Dated N/A with N/A

Update All

** Indicates Potential Utility Aid Request from Local Gov't

Estimate is based on the best available information at the current stage, unforeseen prior rights information may be provided by the Utility Company at a later date that could cause some non-reimbursable costs to shift to the reimbursable cost column.

If additional information is needed, please contact Al Davis at 229-391-5446.

cc: Derrick Vincent, Designer
Patrick Allen, P.E., State Utilities Office
Yulonda Pride-Foster, State Utilities Preconstruction Engineer
Tim Warren, District Preconstruction Engineer

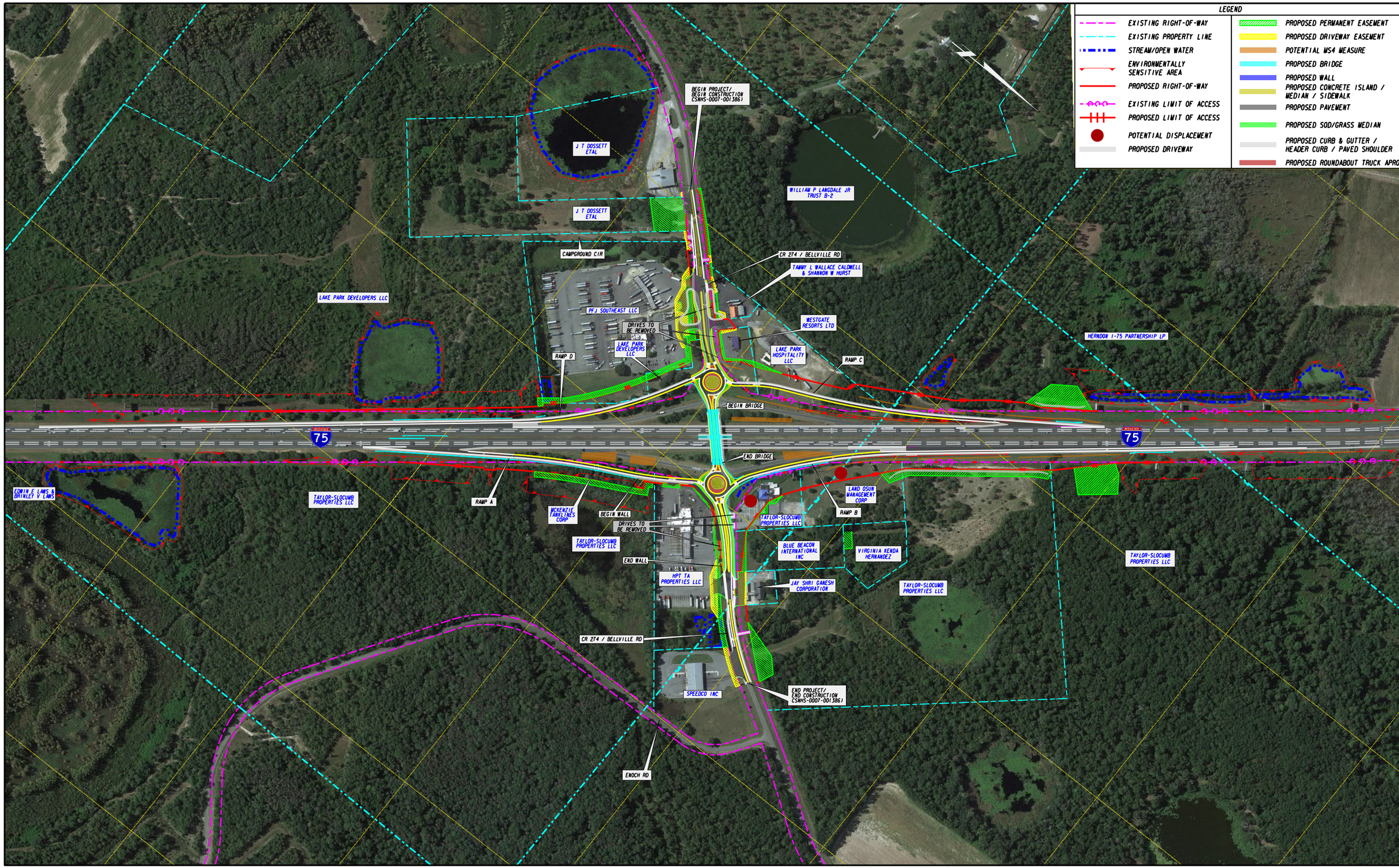

PROJECT LAYOUT
JUNE 8, 2018

SCALE IN FEET
0 150 300 600

JACOBS

PI# 0007386
C.R. 274 / BELLVILLE RD @ I-75

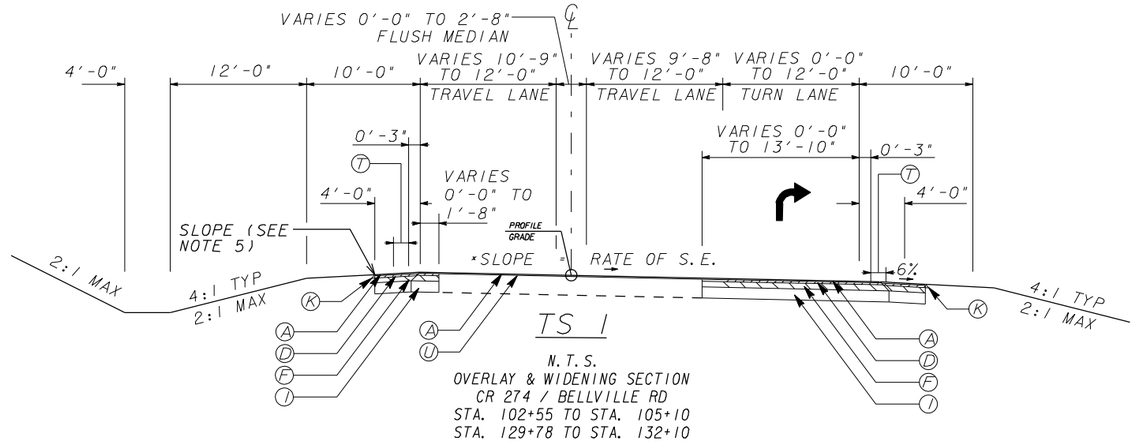

TS 1

N.T.S.
OVERLAY & WIDENING SECTION
CR 274 / BELLVILLE RD
STA. 102+55 TO STA. 105+10
STA. 129+78 TO STA. 132+10

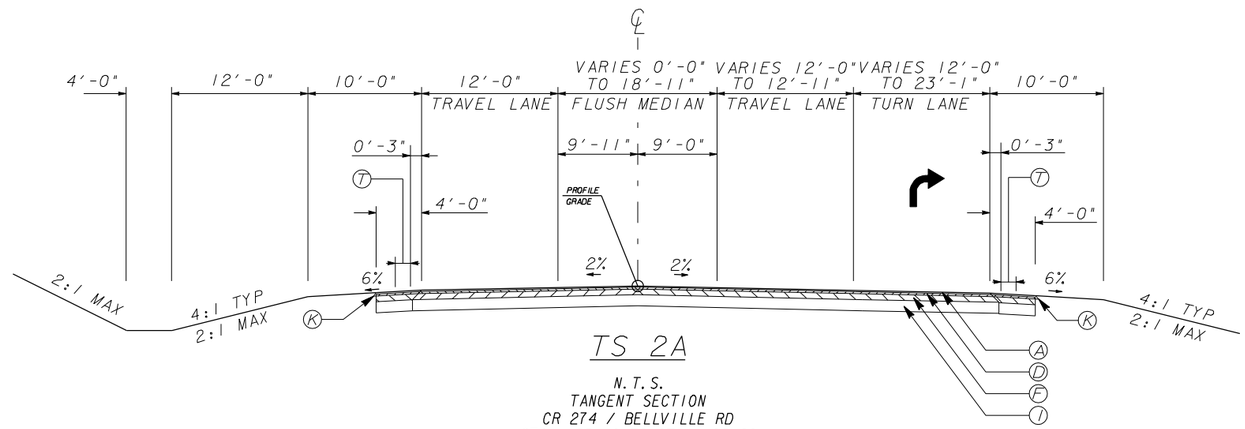

TS 2A

N.T.S.
TANGENT SECTION
CR 274 / BELLVILLE RD
STA. 105+10 TO STA. 108+62

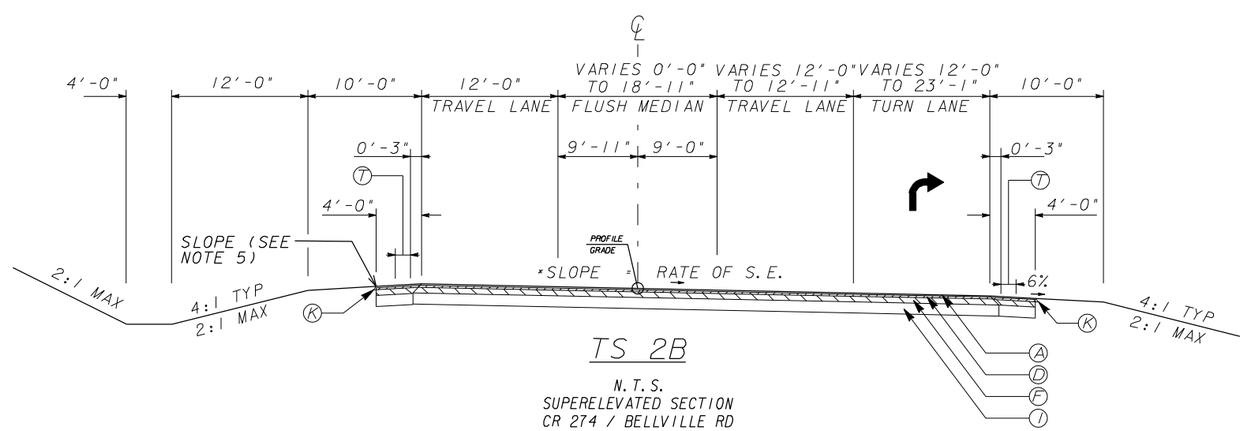

TS 2B

N.T.S.
SUPERELEVATED SECTION
CR 274 / BELLVILLE RD

PAVEMENT DESIGN

- (A) RECYCLED ASPH CONC 12.5 MM SUPERPAVE, GP 2 ONLY, INCL BITUM MATL & H LIME 165 LBS/YD2
- (B) ASPH CONC 12.5 MM PEM, GP 2 ONLY, INCL POLYMER-MODIFIED BITUM MATL & H LIME 135 LBS/YD2
- (C) RECYCLED ASPH CONC 12.5 MM, SMA, GP 2 ONLY, INCL POLYMER-MODIFIED BITUM MATL & H LIME 220 LBS/YD2
- (D) RECYCLED ASPH CONC 19 MM SUPERPAVE, GP 1 OR 2, INCL BITUM MATL & H LIME 220 LBS/YD2
- (E) RECYCLED ASPH CONC 19 MM SUPERPAVE, GP 1 OR 2, INCL BITUM MATL & H LIME 330 LBS/YD2
- (F) RECYCLED ASPH CONC 25 MM SUPERPAVE, GP 1 OR 2, INCL BITUM MATL & H LIME 440 LBS/YD2
- (G) RECYCLED ASPH CONC 25 MM SUPERPAVE, GP 1 OR 2, INCL BITUM MATL & H LIME 880 LBS/YD2
- (H) GR AGGR BASE CRS, INCL MATL, 8"
- (I) GR AGGR BASE CRS, INCL MATL, 12"
- (J) PLAIN PC CONC PVMT, CL 3 CONC, 11 INCH THK
- (K) PAVEMENT EDGE TREATMENT, CONSTRUCTION DETAIL P-7
- (L) CONC CURB & GUTTER, 8 IN X 30 IN, TP 7
- (M) CONC CURB & GUTTER, 8 IN X 30 IN, TP 2
- (N) CONCRETE HEADER CURB, 6 IN, TP 7
- (O) CONCRETE HEADER CURB, 4 IN, TP 9
- (P) CONC SIDEWALK, 4 IN
- (Q) WHERE > 8', GRASS (SEE TS 5A, 5B, & 6 FOR EXCEPTION) WHERE < 8', CONCRETE MEDIAN, 4 IN
- (R) PVMT REINF FABRIC STRIPS, TP 2, 18 INCH WIDTH
- (S) INDENTATION RUMBLE STRIPS - GROUND-IN- PLACE (CONTINUOUS)
- (T) INDENTATION RUMBLE STRIPS - GROUND-IN- PLACE (SKIP)
- (U) MILL ASPH CONC PVMT, 1½ DEPTH

NOTES:
1. SEE ROADWAY PLANS FOR LOCATION OF GUARDRAIL.
2. SLOPE: SEE ROADWAY PLANS FOR SUPERELEVATION RATES AND TRANSITIONS.
3. FOR METHOD OF SUPERELEVATION, SEE CONSTR PLAN & PROFILE SHEETS - CURVE DATA. LOCATIONS OF NORMAL CROWN & FULL S.E. NOTED ON CONSTR CENTERLINE.
4. SHOULDER MAY BE GRADED AWAY FROM ROADWAY TO FACILITATE THE SLOPE TIE TO EXISTING GROUND.
5. FOR RURAL SHOULDERS, SHOULDER TO SLOPE AT 6% OR SUPERELEVATION RATE, WHICHEVER IS GREATER. HOWEVER, THE ALGEBRAIC DIFFERENCE IN PAVING SLOPE AND SHOULDER SLOPE SHALL NOT EXCEED 8%. MINIMUM SHOULDER SLOPE TO BE 2%.

* SEE PLAN SHEETS.

JACOBS™

NOT RELEASED FOR CONSTRUCTION

NOT TO SCALE

REVISION DATES

STATE OF GEORGIA
DEPARTMENT OF TRANSPORTATION
OFFICE: PROGRAM DELIVERY

TYPICAL SECTIONS

CR 274/BELLVILLE RD
@ I-75

DRAWING No. 5-001

GPLN

STATE	PROJECT NUMBER	SHEET NO.	TOTAL SHEETS
GA	CSNHS-0007-00(386)	12	472

NOTES:
1. SEE ROADWAY PLANS FOR LOCATION OF GUARDRAIL.
2. SLOPE: SEE ROADWAY PLANS FOR SUPERELEVATION RATES AND TRANSITIONS.
3. FOR METHOD OF SUPERELEVATION, SEE CONSTR PLAN & PROFILE SHEETS - CURVE DATA. LOCATIONS OF NORMAL CROWN & FULL S.E. NOTED ON CONSTR CENTERLINE.
4. SHOULDER MAY BE GRADED AWAY FROM ROADWAY TO FACILITATE THE SLOPE TIE TO EXISTING GROUND.
5. FOR RURAL SHOULDERS, SHOULDER TO SLOPE AT 6% OR SUPERELEVATION RATE, WHICHEVER IS GREATER. HOWEVER, THE ALGEBRAIC DIFFERENCE IN PAVING SLOPE AND SHOULDER SLOPE SHALL NOT EXCEED 8%. MINIMUM SHOULDER SLOPE TO BE 2%.

★ SEE PLAN SHEETS.

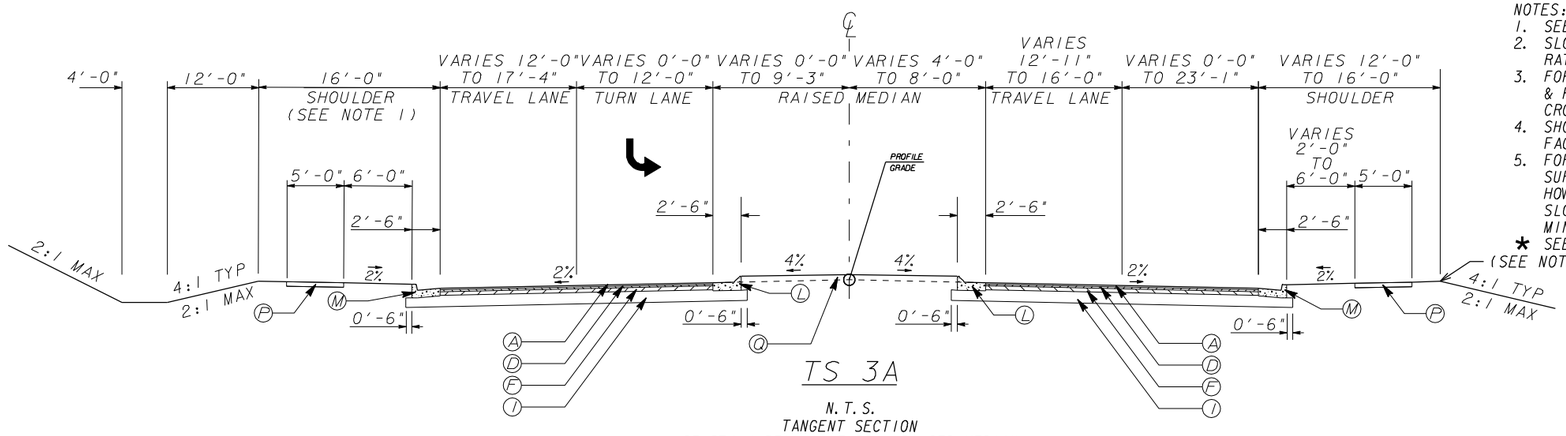

TS 3A

N.T.S.
TANGENT SECTION
CR 274 / BELLVILLE RD - RAISED MEDIAN
STA. 108+62 TO STA. 112+50
STA. 121+50 TO STA. 124+86

PAVEMENT DESIGN

(A) RECYCLED ASPH CONC 12.5 MM SUPERPAVE, GP 2 ONLY, INCL BITUM MATL & H LIME 165 LBS/YD2

(B) ASPH CONC 12.5 MM PEM, GP 2 ONLY, INCL POLYMER-MODIFIED BITUM MATL & H LIME 135 LBS/YD2

(C) RECYCLED ASPH CONC 12.5 MM, SMA, GP 2 ONLY, INCL POLYMER-MODIFIED BITUM MATL & H LIME 220 LBS/YD2

(D) RECYCLED ASPH CONC 19 MM SUPERPAVE, GP 1 OR 2, INCL BITUM MATL & H LIME 220 LBS/YD2

(E) RECYCLED ASPH CONC 19 MM SUPERPAVE, GP 1 OR 2, INCL BITUM MATL & H LIME 330 LBS/YD2

(F) RECYCLED ASPH CONC 25 MM SUPERPAVE, GP 1 OR 2, INCL BITUM MATL & H LIME 440 LBS/YD2

(G) RECYCLED ASPH CONC 25 MM SUPERPAVE, GP 1 OR 2, INCL BITUM MATL & H LIME 880 LBS/YD2

(H) GR AGGR BASE CRS, INCL MATL, 8"

(I) GR AGGR BASE CRS, INCL MATL, 12"

(J) PLAIN PC CONC PVMT, CL 3 CONC, 11 INCH THK

(K) PAVEMENT EDGE TREATMENT, CONSTRUCTION DETAIL P-7

(L) CONC CURB & GUTTER, 8 IN X 30 IN, TP 7

(M) CONC CURB & GUTTER, 8 IN X 30 IN, TP 2

(N) CONCRETE HEADER CURB, 6 IN, TP 7

(O) CONCRETE HEADER CURB, 4 IN, TP 9

(P) CONC SIDEWALK, 4 IN

(Q) WHERE > 8', GRASS (SEE TS 5A, 5B, & 6 FOR EXCEPTION)
WHERE < 8', CONCRETE MEDIAN, 4 IN

(R) PVMT REINF FABRIC STRIPS, TP 2, 18 INCH WIDTH

(S) INDENTATION RUMBLE STRIPS - GROUND-IN- PLACE (CONTINUOUS)

(T) INDENTATION RUMBLE STRIPS - GROUND-IN- PLACE (SKIP)

(U) MILL ASPH CONC PVMT, 1½ DEPTH

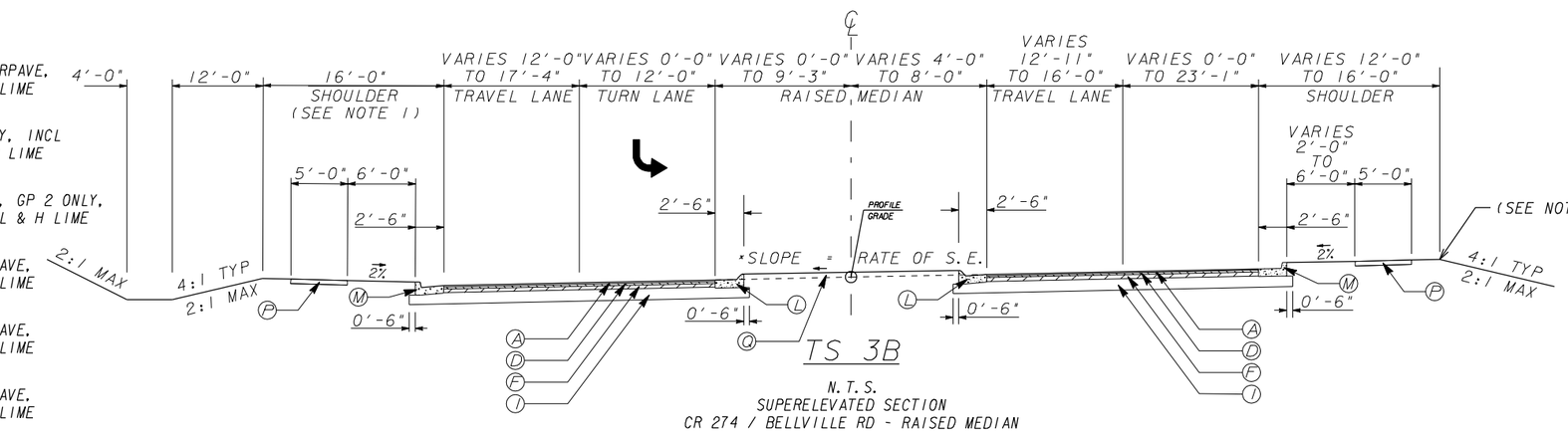

TS 3B

N.T.S.
SUPERELEVATED SECTION
CR 274 / BELLVILLE RD - RAISED MEDIAN

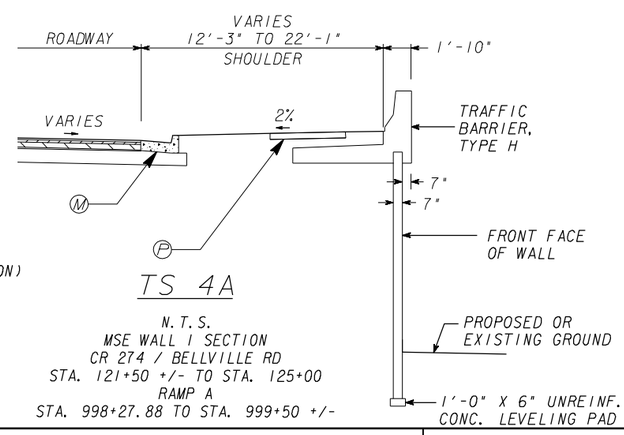

TS 4A

N.T.S.
MSE WALL 1 SECTION
CR 274 / BELLVILLE RD
STA. 121+50 +/- TO STA. 125+00
RAMP A
STA. 998+27.88 TO STA. 999+50 +/-

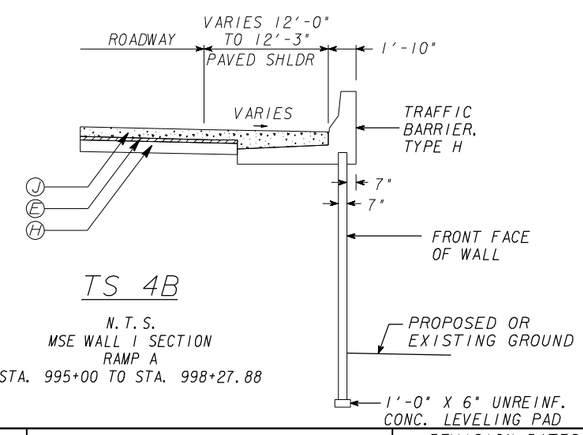

TS 4B

N.T.S.
MSE WALL 1 SECTION
RAMP A
STA. 995+00 TO STA. 998+27.88

TS-4 NOTES:
6. FRONT FACE OF WALL IS WALL BASELINE. SEE SHEETS 32-001 TO 32-003 FOR WALL DETAILS.
7. SEE ROADWAY PLANS FOR LOCATION OF WALL.

JACOBS

NOT RELEASED FOR CONSTRUCTION

NOT TO SCALE

REVISION DATES

STATE OF GEORGIA
DEPARTMENT OF TRANSPORTATION
OFFICE: PROGRAM DELIVERY

TYPICAL SECTIONS

CR 274/BELLVILLE RD @ I-75

DRAWING No. 5-002

GPLN

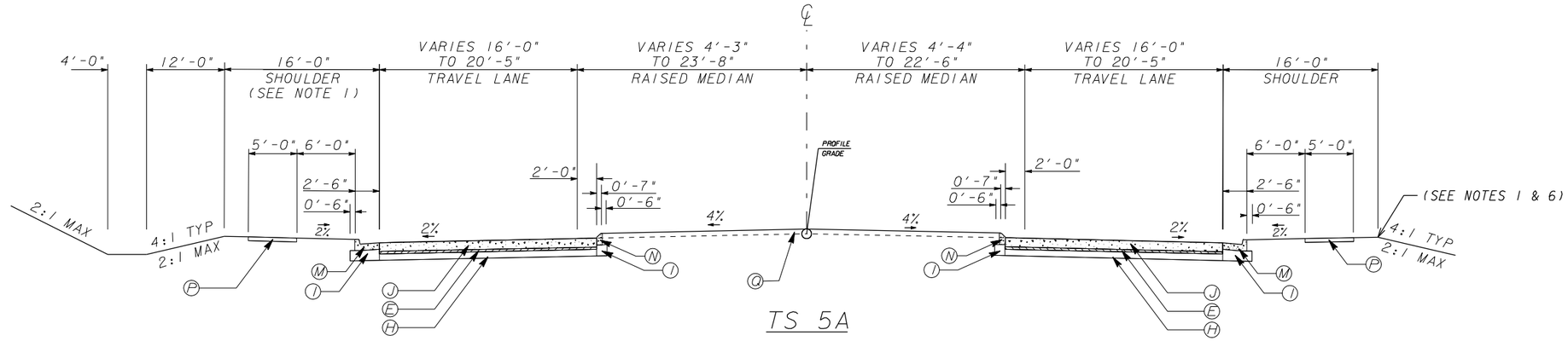

TS 5A

N. T. S.
TANGENT SECTION
CR 274 / BELLVILLE RD - CONCRETE PAVEMENT W/SPLITTER ISLAND
STA. 112+50 TO STA. 113+22
STA. 114+81.29 TO STA. 115+64.16
STA. 118+94.16 TO STA. 119+30.74
STA. 120+90 TO STA. 121+50

TS-5A & 5B NOTE:
7. THE RAISED MEDIANS ARE CONCRETE MEDIAN, 6 INCH, WITHIN THE LIMITS OF THE PLAIN PC CONC PVMT AND ACROSS THE BRIDGE.

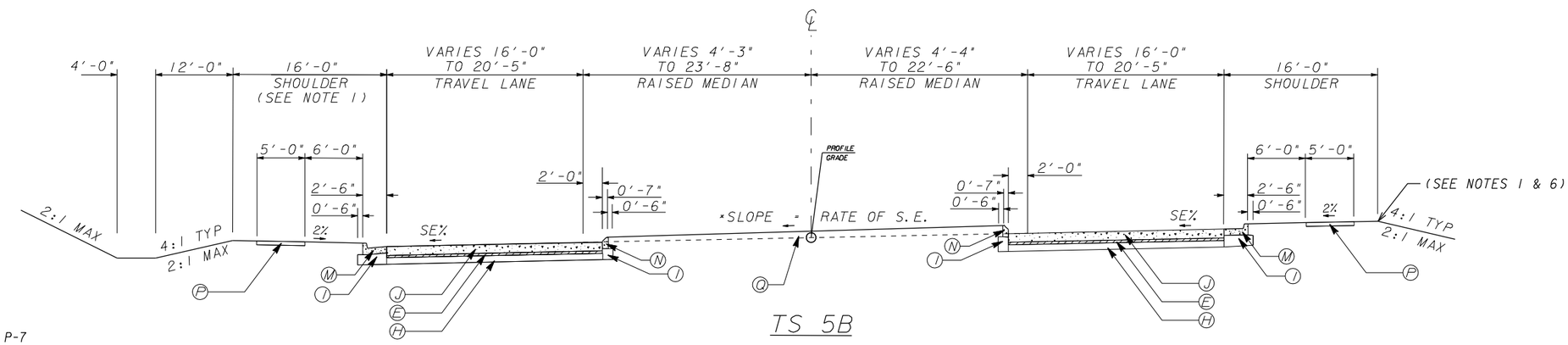

TS 5B

N. T. S.
SUPERELEVATED SECTION
CR 274 / BELLVILLE RD - CONCRETE PAVEMENT W/SPLITTER ISLAND

PAVEMENT DESIGN

- (A) RECYCLED ASPH CONC 12.5 MM SUPERPAVE, GP 2 ONLY, INCL BITUM MATL & H LIME 165 LBS/YD2
- (B) ASPH CONC 12.5 MM PEM, GP 2 ONLY, INCL POLYMER-MODIFIED BITUM MATL & H LIME 135 LBS/YD2
- (C) RECYCLED ASPH CONC 12.5 MM, SMA, GP 2 ONLY, INCL POLYMER-MODIFIED BITUM MATL & H LIME 220 LBS/YD2
- (D) RECYCLED ASPH CONC 19 MM SUPERPAVE, GP 1 OR 2, INCL BITUM MATL & H LIME 220 LBS/YD2
- (E) RECYCLED ASPH CONC 19 MM SUPERPAVE, GP 1 OR 2, INCL BITUM MATL & H LIME 330 LBS/YD2
- (F) RECYCLED ASPH CONC 25 MM SUPERPAVE, GP 1 OR 2, INCL BITUM MATL & H LIME 440 LBS/YD2
- (G) RECYCLED ASPH CONC 25 MM SUPERPAVE, GP 1 OR 2, INCL BITUM MATL & H LIME 880 LBS/YD2
- (H) GR AGGR BASE CRS, INCL MATL, 8"
- (I) GR AGGR BASE CRS, INCL MATL, 12"
- (J) PLAIN PC CONC PVMT, CL 3 CONC, 11 INCH THK
- (K) PAVEMENT EDGE TREATMENT, CONSTRUCTION DETAIL P-7
- (L) CONC CURB & GUTTER, 8 IN X 30 IN, TP 7
- (M) CONC CURB & GUTTER, 8 IN X 30 IN, TP 2
- (N) CONCRETE HEADER CURB, 6 IN, TP 7
- (O) CONCRETE HEADER CURB, 4 IN, TP 9
- (P) CONC SIDEWALK, 4 IN
- (Q) WHERE > 8', GRASS (SEE TS 5A, 5B, & 6 FOR EXCEPTION)
  WHERE < 8', CONCRETE MEDIAN, 4 IN
- (R) PVMT REINF FABRIC STRIPS, TP 2, 18 INCH WIDTH
- (S) INDENTATION RUMBLE STRIPS - GROUND-IN- PLACE (CONTINUOUS)
- (T) INDENTATION RUMBLE STRIPS - GROUND-IN- PLACE (SKIP)
- (U) MILL ASPH CONC PVMT, 1½ DEPTH

NOTES:
1. SEE ROADWAY PLANS FOR LOCATION OF GUARDRAIL.
2. SLOPE: SEE ROADWAY PLANS FOR SUPERELEVATION RATES AND TRANSITIONS.
3. FOR METHOD OF SUPERELEVATION, SEE CONSTR PLAN & PROFILE SHEETS - CURVE DATA. LOCATIONS OF NORMAL CROWN & FULL S.E. NOTED ON CONSTR CENTERLINE.
4. SHOULDER MAY BE GRADED AWAY FROM ROADWAY TO FACILITATE THE SLOPE TIE TO EXISTING GROUND.
5. FOR RURAL SHOULDERS, SHOULDER TO SLOPE AT 6% OR SUPERELEVATION RATE, WHICHEVER IS GREATER. HOWEVER, THE ALGEBRAIC DIFFERENCE IN PAVING SLOPE AND SHOULDER SLOPE SHALL NOT EXCEED 8%. MINIMUM SHOULDER SLOPE TO BE 2%.
6. SEE ROADWAY PLANS FOR LOCATION OF WALL.

★ SEE PLAN SHEETS.

JACOBS™

NOT RELEASED FOR CONSTRUCTION

NOT TO SCALE

REVISION DATES

STATE OF GEORGIA
DEPARTMENT OF TRANSPORTATION
OFFICE: PROGRAM DELIVERY

TYPICAL SECTIONS

CR 274/BELLVILLE RD
@ I-75

DRAWING No. 5-003

GPLN

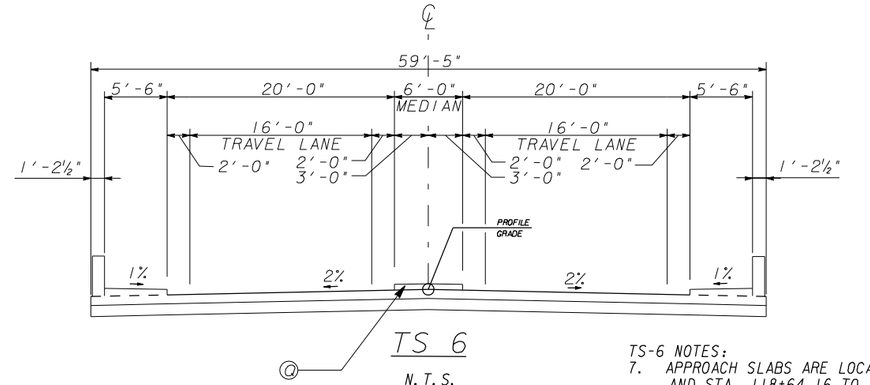

TS 6

N.T.S.
BRIDGE SECTION
CR 274 / BELLVILLE RD
STA. 115+94.16 TO STA. 118+64.16

TS-6 NOTES:
7. APPROACH SLABS ARE LOCATED FROM STA. 115+64.16 TO STA. 115+94.16 AND STA. 118+64.16 TO STA. 118+94.16. SEE GDOT STD 9017-K.
8. THE RAISED MEDIANS ARE CONCRETE MEDIAN, 6 INCH, WITHIN THE LIMITS OF THE PLAIN PC CONC PVMT AND ACROSS THE BRIDGE.

PAVEMENT DESIGN

Ⓐ RECYCLED ASPH CONC 12.5 MM SUPERPAVE, GP 2 ONLY, INCL BITUM MATL & H LIME 165 LBS/YD2

Ⓑ ASPH CONC 12.5 MM PEM, GP 2 ONLY, INCL POLYMER-MODIFIED BITUM MATL & H LIME 135 LBS/YD2

Ⓒ RECYCLED ASPH CONC 12.5 MM, SMA, GP 2 ONLY, INCL POLYMER-MODIFIED BITUM MATL & H LIME 220 LBS/YD2

Ⓓ RECYCLED ASPH CONC 19 MM SUPERPAVE, GP 1 OR 2, INCL BITUM MATL & H LIME 220 LBS/YD2

Ⓔ RECYCLED ASPH CONC 19 MM SUPERPAVE, GP 1 OR 2, INCL BITUM MATL & H LIME 330 LBS/YD2

Ⓕ RECYCLED ASPH CONC 25 MM SUPERPAVE, GP 1 OR 2, INCL BITUM MATL & H LIME 440 LBS/YD2

Ⓖ RECYCLED ASPH CONC 25 MM SUPERPAVE, GP 1 OR 2, INCL BITUM MATL & H LIME 880 LBS/YD2

Ⓗ GR AGGR BASE CRS, INCL MATL, 8"

Ⓘ GR AGGR BASE CRS, INCL MATL, 12"

Ⓙ PLAIN PC CONC PVMT, CL 3 CONC, 11 INCH THK

Ⓚ PAVEMENT EDGE TREATMENT, CONSTRUCTION DETAIL P-7

Ⓛ CONC CURB & GUTTER, 8 IN X 30 IN, TP 7

Ⓜ CONC CURB & GUTTER, 8 IN X 30 IN, TP 2

Ⓝ CONCRETE HEADER CURB, 6 IN, TP 7

Ⓞ CONCRETE HEADER CURB, 4 IN, TP 9

Ⓟ CONC SIDEWALK, 4 IN

Ⓠ WHERE > 8', GRASS (SEE TS 5A, 5B, & 6 FOR EXCEPTION)
WHERE < 8', CONCRETE MEDIAN, 4 IN

Ⓡ PVMT REINF FABRIC STRIPS, TP 2, 18 INCH WIDTH

Ⓢ INDENTATION RUMBLE STRIPS - GROUND-IN- PLACE (CONTINUOUS)

Ⓣ INDENTATION RUMBLE STRIPS - GROUND-IN- PLACE (SKIP)

Ⓤ MILL ASPH CONC PVMT, 1½ DEPTH

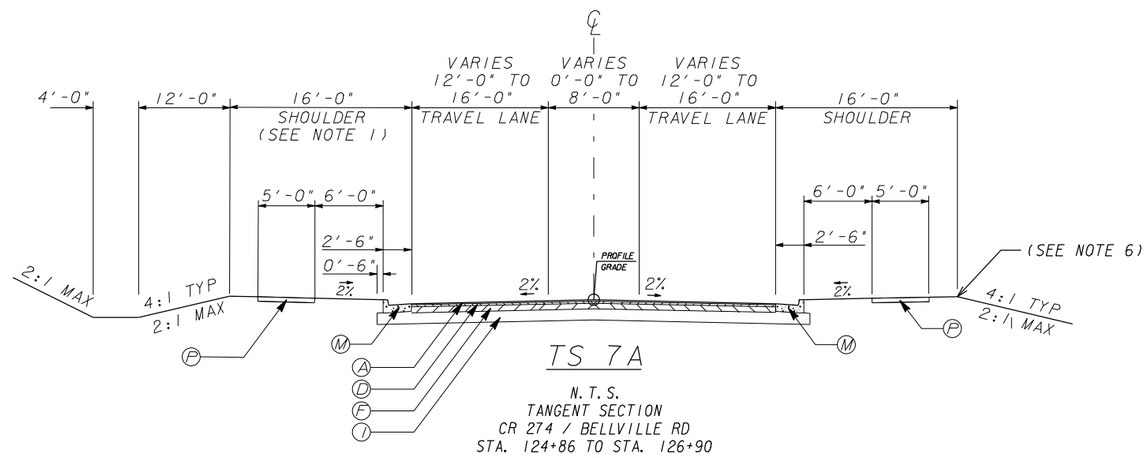

TS 7A

N.T.S.
TANGENT SECTION
CR 274 / BELLVILLE RD
STA. 124+86 TO STA. 126+90

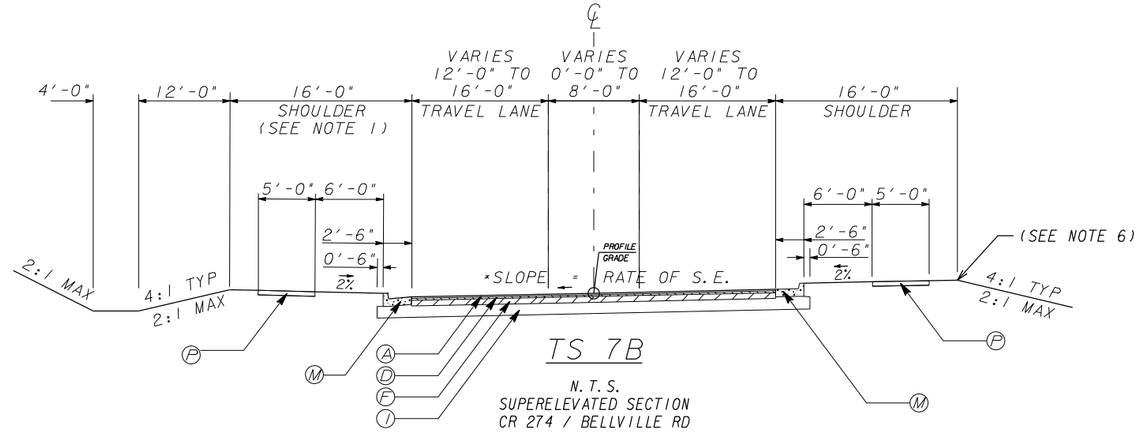

TS 7B

N.T.S.
SUPERELEVATED SECTION
CR 274 / BELLVILLE RD

NOTES:
1. SEE ROADWAY PLANS FOR LOCATION OF GUARDRAIL.
2. SLOPE: SEE ROADWAY PLANS FOR SUPERELEVATION RATES AND TRANSITIONS.
3. FOR METHOD OF SUPERELEVATION, SEE CONSTR PLAN & PROFILE SHEETS - CURVE DATA. LOCATIONS OF NORMAL CROWN & FULL S.E. NOTED ON CONSTR CENTERLINE.
4. SHOULDER MAY BE GRADED AWAY FROM ROADWAY TO FACILITATE THE SLOPE TIE TO EXISTING GROUND.
5. FOR RURAL SHOULDERS, SHOULDER TO SLOPE AT 6% OR SUPERELEVATION RATE, WHICHEVER IS GREATER. HOWEVER, THE ALGEBRAIC DIFFERENCE IN PAVING SLOPE AND SHOULDER SLOPE SHALL NOT EXCEED 8%. MINIMUM SHOULDER SLOPE TO BE 2%.
6. SEE ROADWAY PLANS FOR LOCATION OF WALL.

* SEE PLAN SHEETS.

JACOBS™

NOT RELEASED FOR CONSTRUCTION

NOT TO SCALE

REVISION DATES

STATE OF GEORGIA
DEPARTMENT OF TRANSPORTATION

OFFICE: PROGRAM DELIVERY

TYPICAL SECTIONS

CR 274/BELLVILLE RD
@ I-75

DRAWING No.
5-004

GPLN

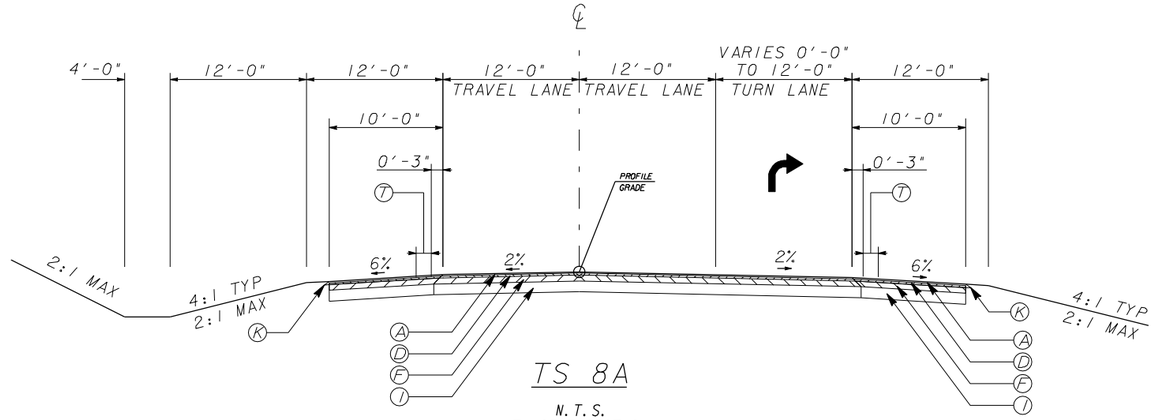

TS 8A

N.T.S.
TANGENT SECTION
CR 274 / BELLVILLE RD
STA. 126+90 TO STA. 129+78

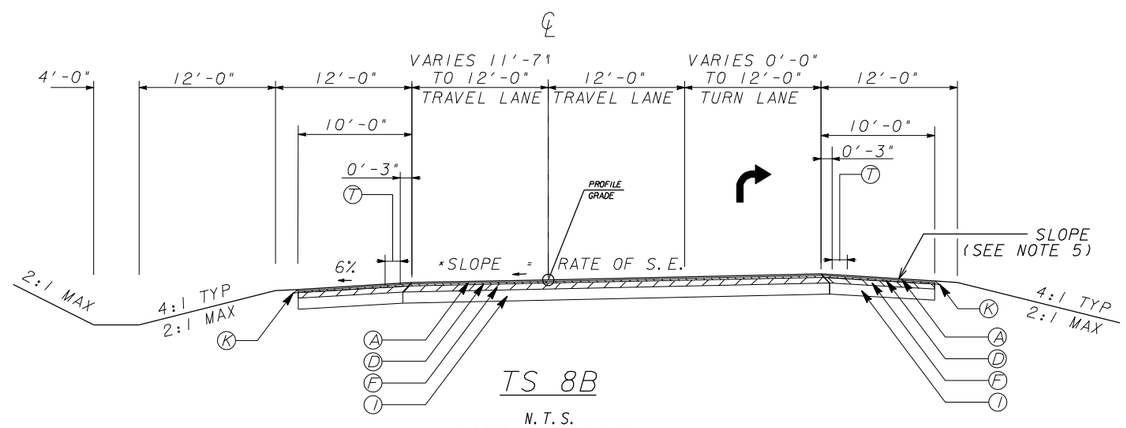

TS 8B

N.T.S.
SUPERELEVATED SECTION
CR 274 / BELLVILLE RD

PAVEMENT DESIGN

(A) RECYCLED ASPH CONC 12.5 MM SUPERPAVE, GP 2 ONLY, INCL BITUM MATL & H LIME 165 LBS/YD2

(B) ASPH CONC 12.5 MM PEM, GP 2 ONLY, INCL POLYMER-MODIFIED BITUM MATL & H LIME 135 LBS/YD2

(C) RECYCLED ASPH CONC 12.5 MM, SMA, GP 2 ONLY, INCL POLYMER-MODIFIED BITUM MATL & H LIME 220 LBS/YD2

(D) RECYCLED ASPH CONC 19 MM SUPERPAVE, GP 1 OR 2, INCL BITUM MATL & H LIME 220 LBS/YD2

(E) RECYCLED ASPH CONC 19 MM SUPERPAVE, GP 1 OR 2, INCL BITUM MATL & H LIME 330 LBS/YD2

(F) RECYCLED ASPH CONC 25 MM SUPERPAVE, GP 1 OR 2, INCL BITUM MATL & H LIME 440 LBS/YD2

(G) RECYCLED ASPH CONC 25 MM SUPERPAVE, GP 1 OR 2, INCL BITUM MATL & H LIME 880 LBS/YD2

(H) GR AGGR BASE CRS, INCL MATL, 8"

(I) GR AGGR BASE CRS, INCL MATL, 12"

(J) PLAIN PC CONC PVMT, CL 3 CONC, 11 INCH THK

(K) PAVEMENT EDGE TREATMENT, CONSTRUCTION DETAIL P-7

(L) CONC CURB & GUTTER, 8 IN X 30 IN, TP 7

(M) CONC CURB & GUTTER, 8 IN X 30 IN, TP 2

(N) CONCRETE HEADER CURB, 6 IN, TP 7

(O) CONCRETE HEADER CURB, 4 IN, TP 9

(P) CONC SIDEWALK, 4 IN

(Q) WHERE > 8', GRASS (SEE TS 5A, 5B, & 6 FOR EXCEPTION)
WHERE < 8', CONCRETE MEDIAN, 4 IN

(R) PVMT REINF FABRIC STRIPS, TP 2, 18 INCH WIDTH

(S) INDENTATION RUMBLE STRIPS - GROUND-IN- PLACE (CONTINUOUS)

(T) INDENTATION RUMBLE STRIPS - GROUND-IN- PLACE (SKIP)

(U) MILL ASPH CONC PVMT, 1½ DEPTH

NOTES:
1. SEE ROADWAY PLANS FOR LOCATION OF GUARDRAIL.
2. SLOPE: SEE ROADWAY PLANS FOR SUPERELEVATION RATES AND TRANSITIONS.
3. FOR METHOD OF SUPERELEVATION, SEE CONSTR PLAN & PROFILE SHEETS - CURVE DATA. LOCATIONS OF NORMAL CROWN & FULL S.E. NOTED ON CONSTR CENTERLINE.
4. SHOULDER MAY BE GRADED AWAY FROM ROADWAY TO FACILITATE THE SLOPE TIE TO EXISTING GROUND.
5. FOR RURAL SHOULDERS, SHOULDER TO SLOPE AT 6% OR SUPERELEVATION RATE, WHICHEVER IS GREATER. HOWEVER, THE ALGEBRAIC DIFFERENCE IN PAVING SLOPE AND SHOULDER SLOPE SHALL NOT EXCEED 8%. MINIMUM SHOULDER SLOPE TO BE 2%.

* SEE PLAN SHEETS.

JACOBS™

NOT RELEASED FOR CONSTRUCTION

NOT TO SCALE

REVISION DATES

STATE OF GEORGIA
DEPARTMENT OF TRANSPORTATION
OFFICE: PROGRAM DELIVERY

TYPICAL SECTIONS

CR 274/BELLVILLE RD
@ I-75

DRAWING No. 5-005

GPLN

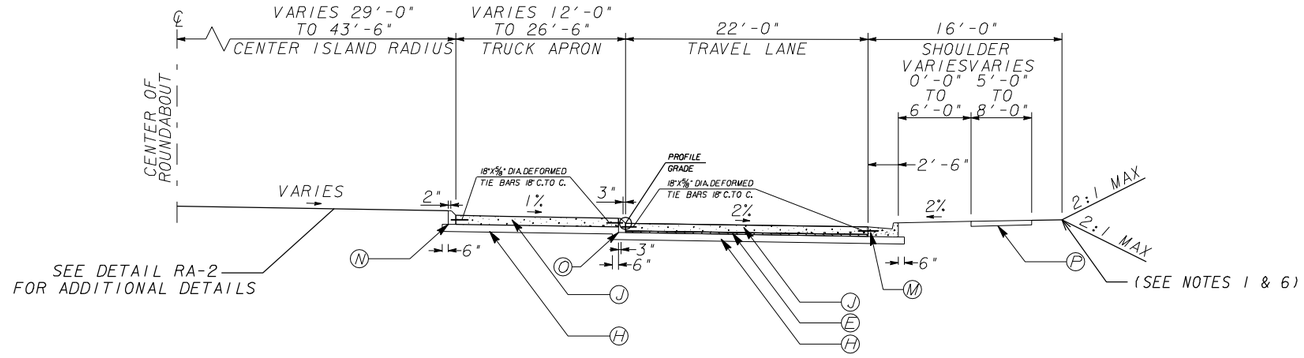

TS 9A

N. T. S.
TANGENT SECTION
CR 274 / BELLVILLE RD - CONCRETE PAVEMENT ROUNDABOUT
STA. 113+22.00 TO STA. 114+81.29
STA. 119+30.74 TO STA. 120+90.16

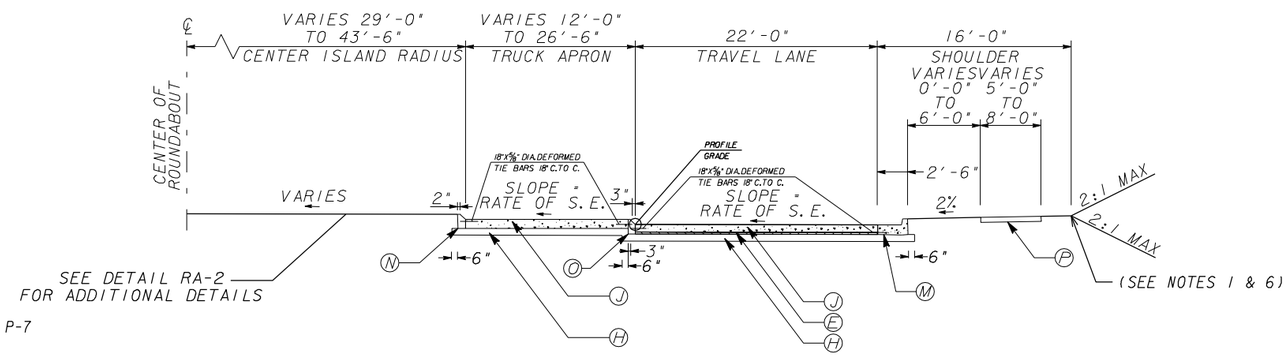

TS 9B

N. T. S.
SUPERELEVATED SECTION
CR 274 / BELLVILLE RD - CONCRETE PAVEMENT ROUNDABOUT

PAVEMENT DESIGN

- (A) RECYCLED ASPH CONC 12.5 MM SUPERPAVE, GP 2 ONLY, INCL BITUM MATL & H LIME 165 LBS/YD2
- (B) ASPH CONC 12.5 MM PEM, GP 2 ONLY, INCL POLYMER-MODIFIED BITUM MATL & H LIME 135 LBS/YD2
- (C) RECYCLED ASPH CONC 12.5 MM, SMA, GP 2 ONLY, INCL POLYMER-MODIFIED BITUM MATL & H LIME 220 LBS/YD2
- (D) RECYCLED ASPH CONC 19 MM SUPERPAVE, GP 1 OR 2, INCL BITUM MATL & H LIME 220 LBS/YD2
- (E) RECYCLED ASPH CONC 19 MM SUPERPAVE, GP 1 OR 2, INCL BITUM MATL & H LIME 330 LBS/YD2
- (F) RECYCLED ASPH CONC 25 MM SUPERPAVE, GP 1 OR 2, INCL BITUM MATL & H LIME 440 LBS/YD2
- (G) RECYCLED ASPH CONC 25 MM SUPERPAVE, GP 1 OR 2, INCL BITUM MATL & H LIME 880 LBS/YD2
- (H) GR AGGR BASE CRS, INCL MATL, 8"
- (I) GR AGGR BASE CRS, INCL MATL, 12"
- (J) PLAIN PC CONC PVMT, CL 3 CONC, 11 INCH THK
- (K) PAVEMENT EDGE TREATMENT, CONSTRUCTION DETAIL P-7
- (L) CONC CURB & GUTTER, 8 IN X 30 IN, TP 7
- (M) CONC CURB & GUTTER, 8 IN X 30 IN, TP 2
- (N) CONCRETE HEADER CURB, 6 IN, TP 7
- (O) CONCRETE HEADER CURB, 4 IN, TP 9
- (P) CONC SIDEWALK, 4 IN
- (Q) WHERE > 8', GRASS (SEE TS 5A, 5B, & 6 FOR EXCEPTION)
  WHERE < 8', CONCRETE MEDIAN, 4 IN
- (R) PVMT REINF FABRIC STRIPS, TP 2, 18 INCH WIDTH
- (S) INDENTATION RUMBLE STRIPS - GROUND-IN- PLACE (CONTINUOUS)
- (T) INDENTATION RUMBLE STRIPS - GROUND-IN- PLACE (SKIP)
- (U) MILL ASPH CONC PVMT, 1½ DEPTH

NOTES:
1. SEE ROADWAY PLANS FOR LOCATION OF GUARDRAIL.
2. SLOPE: SEE ROADWAY PLANS FOR SUPERELEVATION RATES AND TRANSITIONS.
3. FOR METHOD OF SUPERELEVATION, SEE CONSTR PLAN & PROFILE SHEETS - CURVE DATA. LOCATIONS OF NORMAL CROWN & FULL S.E. NOTED ON CONSTR CENTERLINE.
4. SHOULDER MAY BE GRADED AWAY FROM ROADWAY TO FACILITATE THE SLOPE TIE TO EXISTING GROUND.
5. FOR RURAL SHOULDERS, SHOULDER TO SLOPE AT 6% OR SUPERELEVATION RATE, WHICHEVER IS GREATER. HOWEVER, THE ALGEBRAIC DIFFERENCE IN PAVING SLOPE AND SHOULDER SLOPE SHALL NOT EXCEED 8%. MINIMUM SHOULDER SLOPE TO BE 2%.
6. SEE ROADWAY PLANS FOR LOCATION OF WALL.

★ SEE PLAN SHEETS.

JACOBS

NOT RELEASED FOR CONSTRUCTION

NOT TO SCALE

REVISION DATES

STATE OF GEORGIA
DEPARTMENT OF TRANSPORTATION
OFFICE: PROGRAM DELIVERY

TYPICAL SECTIONS

CR 274/BELLVILLE RD
@ I-75

DRAWING No. 5-006

GPLN

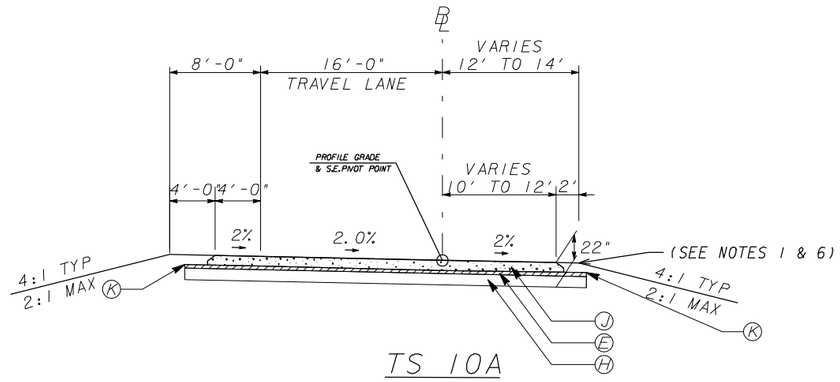

TS 10A

N.T.S.
TANGENT SECTION
RAMP A - STA. 984+81.12 TO STA. 998+27.88
RAMP B - STA. 1102+13.63 TO STA. 1109+84.59
RAMP C - STA. 1182+48.47 TO STA. 1198+24.08
RAMP D - STA. 1301+36.12 TO STA. 1310+63.17

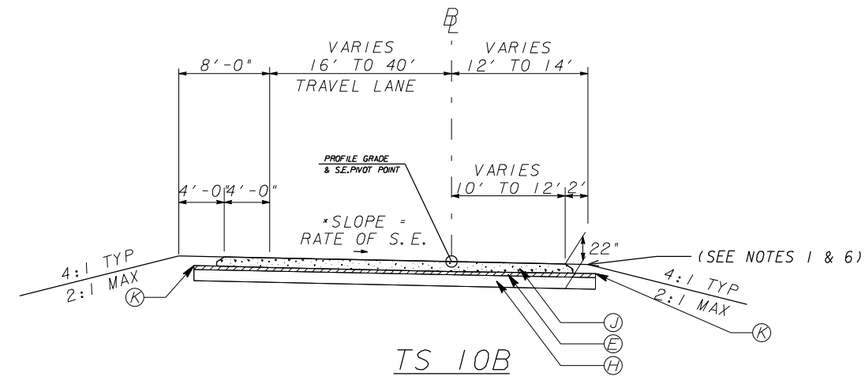

TS 10B

N.T.S.
SUPERELEVATED SECTION

PAVEMENT DESIGN

- (A) RECYCLED ASPH CONC 12.5 MM SUPERPAVE, GP 2 ONLY, INCL BITUM MATL & H LIME 165 LBS/YD2
- (B) ASPH CONC 12.5 MM PEM, GP 2 ONLY, INCL POLYMER-MODIFIED BITUM MATL & H LIME 135 LBS/YD2
- (C) RECYCLED ASPH CONC 12.5 MM, SMA, GP 2 ONLY, INCL POLYMER-MODIFIED BITUM MATL & H LIME 220 LBS/YD2
- (D) RECYCLED ASPH CONC 19 MM SUPERPAVE, GP 1 OR 2, INCL BITUM MATL & H LIME 220 LBS/YD2
- (E) RECYCLED ASPH CONC 19 MM SUPERPAVE, GP 1 OR 2, INCL BITUM MATL & H LIME 330 LBS/YD2
- (F) RECYCLED ASPH CONC 25 MM SUPERPAVE, GP 1 OR 2, INCL BITUM MATL & H LIME 440 LBS/YD2
- (G) RECYCLED ASPH CONC 25 MM SUPERPAVE, GP 1 OR 2, INCL BITUM MATL & H LIME 880 LBS/YD2
- (H) GR AGGR BASE CRS, INCL MATL, 8"
- (I) GR AGGR BASE CRS, INCL MATL, 12"
- (J) PLAIN PC CONC PVMT, CL 3 CONC, 11 INCH THK
- (K) PAVEMENT EDGE TREATMENT, CONSTRUCTION DETAIL P-7
- (L) CONC CURB & GUTTER, 8 IN X 30 IN, TP 7
- (M) CONC CURB & GUTTER, 8 IN X 30 IN, TP 2
- (N) CONCRETE HEADER CURB, 6 IN, TP 7
- (O) CONCRETE HEADER CURB, 4 IN, TP 9
- (P) CONC SIDEWALK, 4 IN
- (Q) WHERE > 8', GRASS (SEE TS 5A, 5B, & 6 FOR EXCEPTION) WHERE < 8', CONCRETE MEDIAN, 4 IN
- (R) PVMT REINF FABRIC STRIPS, TP 2, 18 INCH WIDTH
- (S) INDENTATION RUMBLE STRIPS - GROUND-IN- PLACE (CONTINUOUS)
- (T) INDENTATION RUMBLE STRIPS - GROUND-IN- PLACE (SKIP)
- (U) MILL ASPH CONC PVMT, 1½ DEPTH

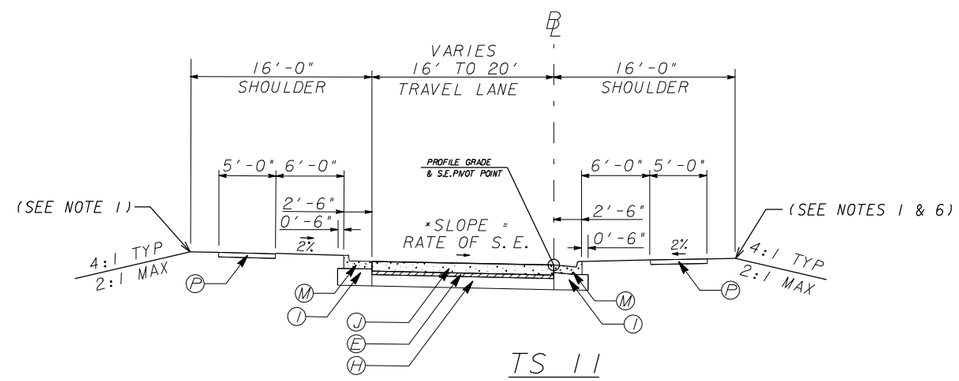

TS 11

N.T.S.
SUPERELEVATED SECTION
RAMP A - STA. 998+27.88 TO STA. 999+53.94
RAMP B - STA. 1100+07.62 TO STA. 1102+13.63
RAMP C - STA. 1198+24.08 TO STA. 1199+52.90
RAMP D - STA. 1300+03.51 TO STA. 1301+36.12

NOTES:
1. SEE ROADWAY PLANS FOR LOCATION OF GUARDRAIL.
2. SLOPE: SEE ROADWAY PLANS FOR SUPERELEVATION RATES AND TRANSITIONS.
3. FOR METHOD OF SUPERELEVATION, SEE CONSTR PLAN & PROFILE SHEETS - CURVE DATA. LOCATIONS OF NORMAL CROWN & FULL S.E. NOTED ON CONSTR CENTERLINE.
4. SHOULDER MAY BE GRADED AWAY FROM ROADWAY TO FACILITATE THE SLOPE TIE TO EXISTING GROUND.
5. FOR RURAL SHOULDERS, SHOULDER TO SLOPE AT 6% OR SUPERELEVATION RATE, WHICHEVER IS GREATER. HOWEVER, THE ALGEBRAIC DIFFERENCE IN PAVING SLOPE AND SHOULDER SLOPE SHALL NOT EXCEED 8%. MINIMUM SHOULDER SLOPE TO BE 2%.
6. SEE ROADWAY PLANS FOR LOCATION OF WALL.
7. SEE GDOT CONSTRUCTION DETAIL R-2 FOR EXIT RAMPS.

★ SEE PLAN SHEETS.

JACOBS

NOT RELEASED FOR CONSTRUCTION

NOT TO SCALE

REVISION DATES

STATE OF GEORGIA
DEPARTMENT OF TRANSPORTATION
OFFICE: PROGRAM DELIVERY

TYPICAL SECTIONS

CR 274/BELLVILLE RD
@ I-75

DRAWING No. 5-007

GPLN

TS-12 NOTE:
9. I-75 SB STA. 1965+00.00 TO STA. 1974+00.00 - BARN ROOF FORESLOPE WITH 20' AT 6:1 FROM SHOULDER HINGE POINT & TIE IN TO EXISTING GROUND AT 4:1.

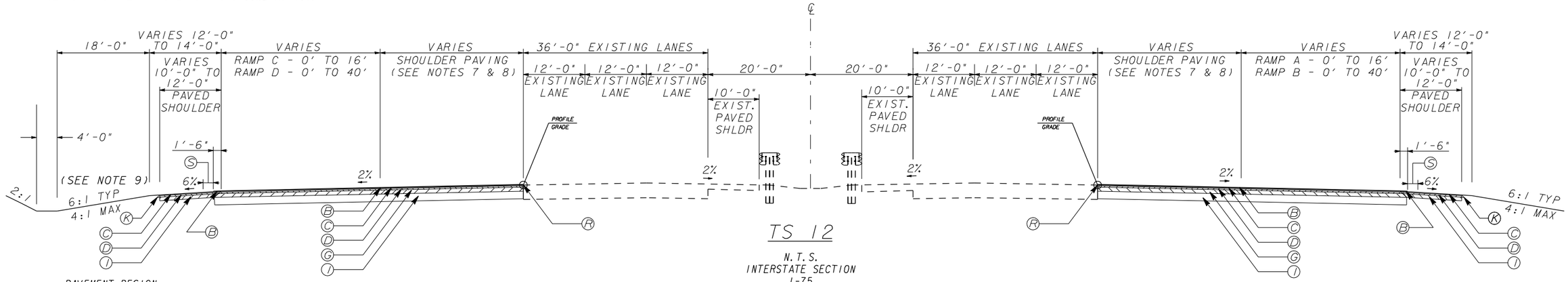

TS 12

N.T.S.
INTERSTATE SECTION
I-75

STA. 1960+00.00 TO STA. 1989+51.66 SB (RAMP D - STA. 1310+63.00 TO STA. 1340+14.06)
STA. 1979+16.01 TO STA. 1985+38.72 NB (RAMP A - STA. 978+58.54 TO STA. 984+81.12)
STA. 2009+79.54 TO STA. 2039+30.00 NB (RAMP B - STA. 1109+84.59 TO STA. 1139+36.38)
STA. 2016+81.30 TO STA. 2023+04.00 SB (RAMP C - STA. 1176+25.89 TO STA. 1182+48.47)

PAVEMENT DESIGN

- (A) RECYCLED ASPH CONC 12.5 MM SUPERPAVE, GP 2 ONLY, INCL BITUM MATL & H LIME 165 LBS/YD2
- (B) ASPH CONC 12.5 MM PEM, GP 2 ONLY, INCL POLYMER-MODIFIED BITUM MATL & H LIME 135 LBS/YD2
- (C) RECYCLED ASPH CONC 12.5 MM, SMA, GP 2 ONLY, INCL POLYMER-MODIFIED BITUM MATL & H LIME 220 LBS/YD2
- (D) RECYCLED ASPH CONC 19 MM SUPERPAVE, GP 1 OR 2, INCL BITUM MATL & H LIME 220 LBS/YD2
- (E) RECYCLED ASPH CONC 19 MM SUPERPAVE, GP 1 OR 2, INCL BITUM MATL & H LIME 330 LBS/YD2
- (F) RECYCLED ASPH CONC 25 MM SUPERPAVE, GP 1 OR 2, INCL BITUM MATL & H LIME 440 LBS/YD2
- (G) RECYCLED ASPH CONC 25 MM SUPERPAVE, GP 1 OR 2, INCL BITUM MATL & H LIME 880 LBS/YD2
- (H) GR AGGR BASE CRS, INCL MATL, 8"
- (I) GR AGGR BASE CRS, INCL MATL, 12"
- (J) PLAIN PC CONC PVMT, CL 3 CONC, 11 INCH THK
- (K) PAVEMENT EDGE TREATMENT, CONSTRUCTION DETAIL P-7
- (L) CONC CURB & GUTTER, 8 IN X 30 IN, TP 7
- (M) CONC CURB & GUTTER, 8 IN X 30 IN, TP 2
- (N) CONCRETE HEADER CURB, 6 IN, TP 7
- (O) CONCRETE HEADER CURB, 4 IN, TP 9
- (P) CONC SIDEWALK, 4 IN
- (Q) WHERE > 8', GRASS (SEE TS 5A, 5B, & 6 FOR EXCEPTION) WHERE < 8', CONCRETE MEDIAN, 4 IN
- (R) PVMT REINF FABRIC STRIPS, TP 2, 18 INCH WIDTH
- (S) INDENTATION RUMBLE STRIPS - GROUND-IN- PLACE (CONTINUOUS)
- (T) INDENTATION RUMBLE STRIPS - GROUND-IN- PLACE (SKIP)
- (U) MILL ASPH CONC PVMT, 1½ DEPTH

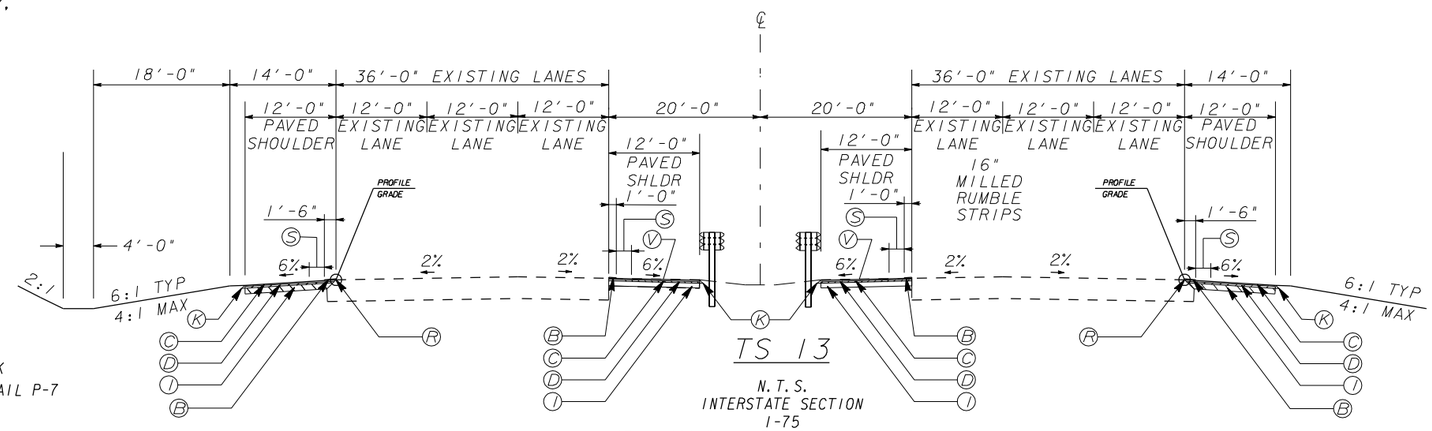

TS 13

N.T.S.
INTERSTATE SECTION
I-75

STA. 1989+51.66 TO STA. 2016+81.30 SB
STA. 1985+38.72 TO STA. 2009+79.54 NB

RECONSTRUCT INSIDE SHOULDER FROM
(V) STA 1999+00 TO 2001+00 NB & SB

NOTES:
1. SEE ROADWAY PLANS FOR LOCATION OF GUARDRAIL.
2. SLOPE: SEE ROADWAY PLANS FOR SUPERELEVATION RATES AND TRANSITIONS.
3. FOR METHOD OF SUPERELEVATION, SEE CONSTR PLAN & PROFILE SHEETS - CURVE DATA. LOCATIONS OF NORMAL CROWN & FULL S.E. NOTED ON CONSTR CENTERLINE.
4. SHOULDER MAY BE GRADED AWAY FROM ROADWAY TO FACILITATE THE SLOPE TIE TO EXISTING GROUND.
5. FOR RURAL SHOULDERS, SHOULDER TO SLOPE AT 6% OR SUPERELEVATION RATE, WHICHEVER IS GREATER. HOWEVER, THE ALGEBRAIC DIFFERENCE IN PAVING SLOPE AND SHOULDER SLOPE SHALL NOT EXCEED 8%. MINIMUM SHOULDER SLOPE TO BE 2%.
6. SEE GDOT CONSTRUCTION DETAIL R-2 FOR EXIT RAMPS.
7. SHOULDER PAVING AT RAMPS A & C VARIES FROM 0' TO 27'-6".
8. SHOULDER PAVING AT RAMPS B & D VARIES FROM 0' TO 31'-0".

★ SEE PLAN SHEETS.

JACOBS™

NOT RELEASED FOR CONSTRUCTION

NOT TO SCALE

REVISION DATES		

STATE OF GEORGIA
DEPARTMENT OF TRANSPORTATION
OFFICE: PROGRAM DELIVERY

TYPICAL SECTIONS

CR 274/BELLVILLE RD
@ I-75

DRAWING No. 5-008

GPLN

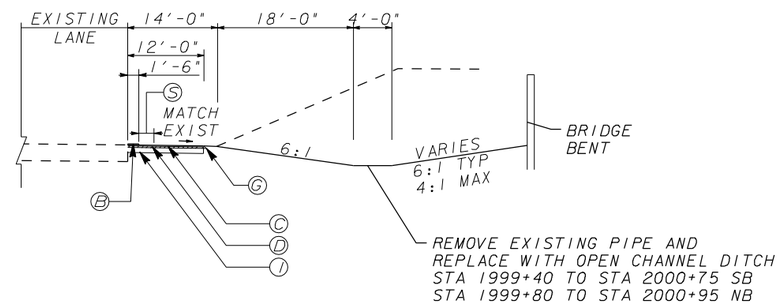

TS 14

N.T.S.
INTERSTATE SHOULDER SECTION
I-75
CONSTRUCT SHOULDER STA. 1989+50.37 TO STA. 2017+31.14 SB
CONSTRUCT SHOULDER STA. 1984+88.87 TO STA. 2009+80.71 NB

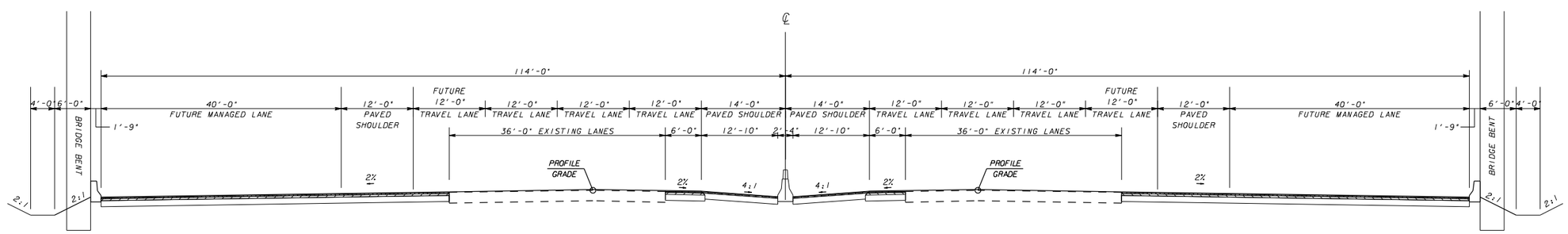

TS 15

N.T.S.
INTERSTATE SECTION
FUTURE I-75
(TO BE CONSTRUCTED BY OTHERS)

JACOBS™

NOT RELEASED FOR CONSTRUCTION

NOT TO SCALE

REVISION DATES		

STATE OF GEORGIA
DEPARTMENT OF TRANSPORTATION
OFFICE: PROGRAM DELIVERY

TYPICAL SECTIONS

CR 274/BELLVILLE RD
@ I-75

DRAWING No. 5-009

GPLN

NOTES:
1. SEE ROADWAY PLANS FOR LOCATION OF GUARDRAIL.
2. SLOPE: SEE ROADWAY PLANS FOR SUPERELEVATION RATES AND TRANSITIONS.
3. FOR METHOD OF SUPERELEVATION, SEE CONSTR PLAN & PROFILE SHEETS - CURVE DATA. LOCATIONS OF NORMAL CROWN & FULL S.E. NOTED ON CONSTR CENTERLINE.
4. SHOULDER MAY BE GRADED AWAY FROM ROADWAY TO FACILITATE THE SLOPE TIE TO EXISTING GROUND.
5. FOR RURAL SHOULDERS, SHOULDER TO SLOPE AT 6% OR SUPERELEVATION RATE, WHICHEVER IS GREATER. HOWEVER, THE ALGEBRAIC DIFFERENCE IN PAVING SLOPE AND SHOULDER SLOPE SHALL NOT EXCEED 8%. MINIMUM SHOULDER SLOPE TO BE 2%.
6. SEE ROADWAY PLANS FOR LOCATION OF WALL.

* SEE PLAN SHEETS.

STAGING TS-1 TO TS-4 NOTE:
7. ALL TEMPORARY ASPHALT PAVEMENT SECTIONS NOT DEPICTED IN THE TYPICAL SECTIONS WILL BE THE SAME AS THE TEMPORARY PAVEMENT SHOWN.

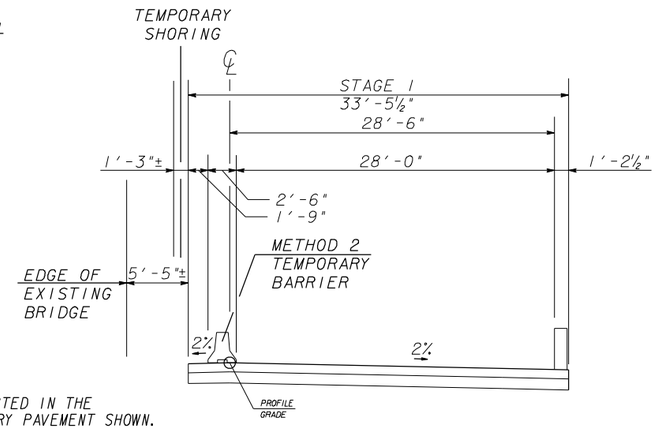

STAGING TS 1

N. T. S.
BRIDGE SECTION - STAGE 1
CR 274 / BELLVILLE RD
STA. 115+94.16 TO STA. 118+64.16

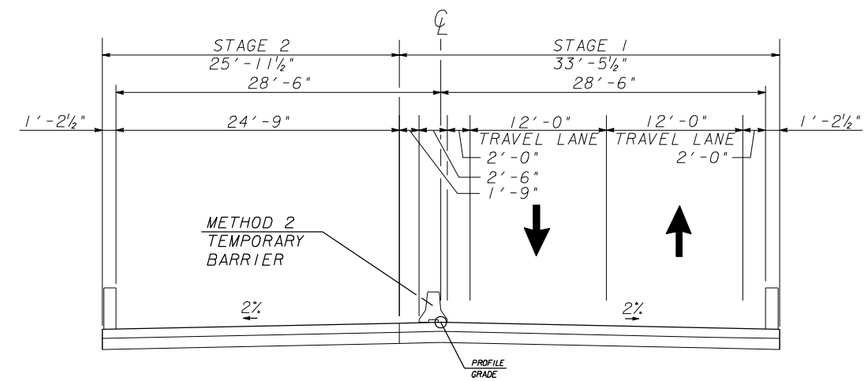

STAGING TS 2

N. T. S.
BRIDGE SECTION - STAGE 2
CR 274 / BELLVILLE RD
STA. 115+94.16 TO STA. 118+64.16

PAVEMENT DESIGN

- (A) RECYCLED ASPH CONC 12.5 MM SUPERPAVE, GP 2 ONLY, INCL BITUM MATL & H LIME 165 LBS/YD2
- (B) ASPH CONC 12.5 MM PEM, GP 2 ONLY, INCL POLYMER-MODIFIED BITUM MATL & H LIME 135 LBS/YD2
- (C) RECYCLED ASPH CONC 12.5 MM, SMA, GP 2 ONLY, INCL POLYMER-MODIFIED BITUM MATL & H LIME 220 LBS/YD2
- (D) RECYCLED ASPH CONC 19 MM SUPERPAVE, GP 1 OR 2, INCL BITUM MATL & H LIME 220 LBS/YD2
- (E) RECYCLED ASPH CONC 19 MM SUPERPAVE, GP 1 OR 2, INCL BITUM MATL & H LIME 330 LBS/YD2
- (F) RECYCLED ASPH CONC 25 MM SUPERPAVE, GP 1 OR 2, INCL BITUM MATL & H LIME 440 LBS/YD2
- (G) RECYCLED ASPH CONC 25 MM SUPERPAVE, GP 1 OR 2, INCL BITUM MATL & H LIME 880 LBS/YD2
- (H) GR AGGR BASE CRS, INCL MATL, 8"
- (J) GR AGGR BASE CRS, INCL MATL, 12"
- (J) PLAIN PC CONC PVMT, CL 3 CONC, 11 INCH THK
- (K) PAVEMENT EDGE TREATMENT, CONSTRUCTION DETAIL P-7
- (L) CONC CURB & GUTTER, 8 IN X 30 IN, TP 7
- (M) CONC CURB & GUTTER, 8 IN X 30 IN, TP 2
- (N) CONCRETE HEADER CURB, 6 IN, TP 7
- (O) CONCRETE HEADER CURB, 4 IN, TP 9
- (P) CONC SIDEWALK, 4 IN
- (Q) WHERE > 8', GRASS (SEE TS 5A, 5B, & 6 FOR EXCEPTION) WHERE < 8', CONCRETE MEDIAN, 4 IN
- (R) PVMT REINF FABRIC STRIPS, TP 2, 18 INCH WIDTH
- (S) INDENTATION RUMBLE STRIPS - GROUND-IN- PLACE (CONTINUOUS)
- (T) INDENTATION RUMBLE STRIPS - GROUND-IN- PLACE (SKIP)
- (U) MILL ASPH CONC PVMT, 1½ DEPTH

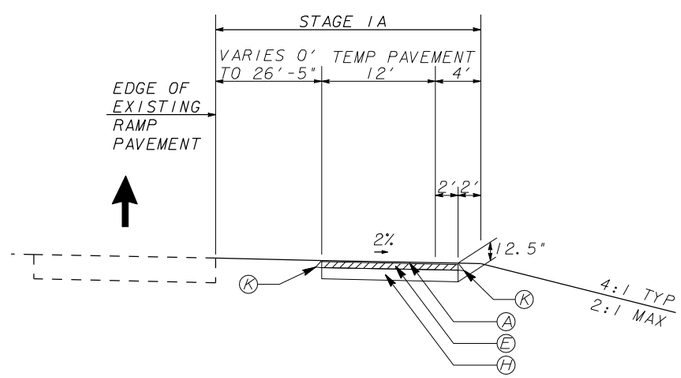

STAGING TS 3

N. T. S.
RAMPS A AND D SECTION - STAGE 1A
RAMP A - STA. 993+22.00 TO STA. 999+53.94
RAMP D - STA. 1300+03.51 TO STA. 1303+98.00

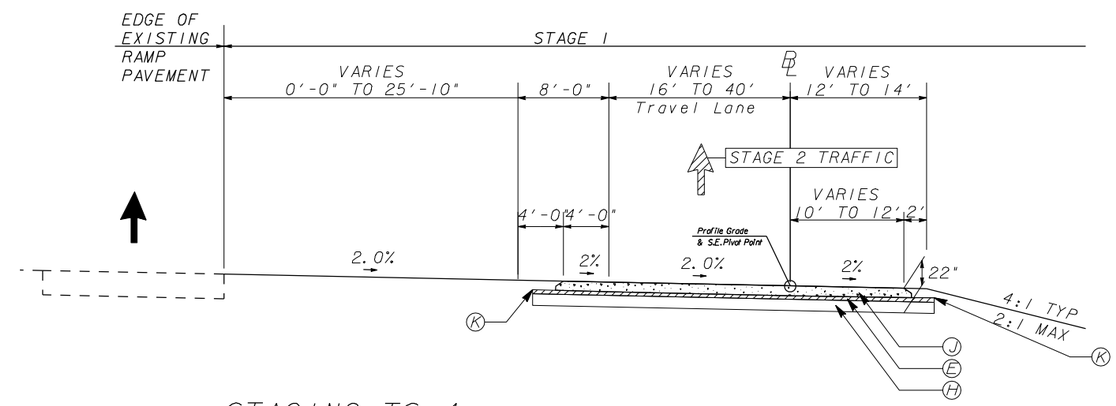

STAGING TS 4

N. T. S.
RAMPS B AND C SECTION - STAGE 1
RAMP B - STA. 1100+07.62 TO STA. 1109+85.00
RAMP C - STA. 1182+48.47 TO STA. 1199+52.90

SEE TYPICAL SECTIONS 12 AND 13 FOR STAGE 1 CONSTRUCTION OF RAMPS B AND C ALONG I-75 FROM:
STA. 2009+79.54 TO STA. 2039+30.00 RT
STA. 2016+81.30 TO STA. 2023+04.00 LT

JACOBS

NOT RELEASED FOR CONSTRUCTION

NOT TO SCALE

REVISION DATES

STATE OF GEORGIA
DEPARTMENT OF TRANSPORTATION
OFFICE: PROGRAM DELIVERY

TYPICAL SECTIONS

CR 274/BELLVILLE RD
@ I-75

DRAWING NO. 5-010

GPLN

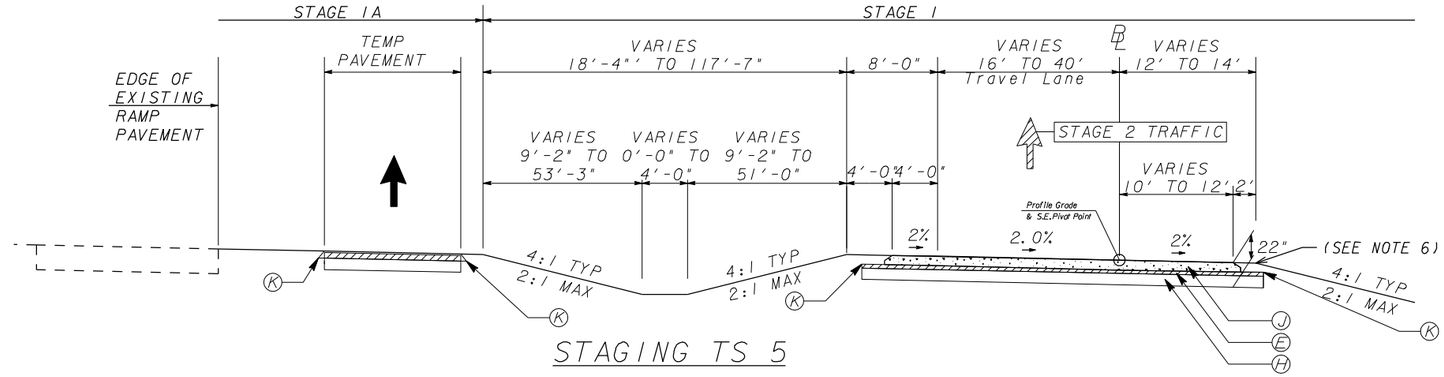

STAGING TS 5

N.T.S.
RAMPS A AND D SECTION - STAGE 1
RAMP A - STA. 993+22.00 TO STA. 999+53.94
RAMP D - STA. 1300+03.51 TO STA. 1303+98.00

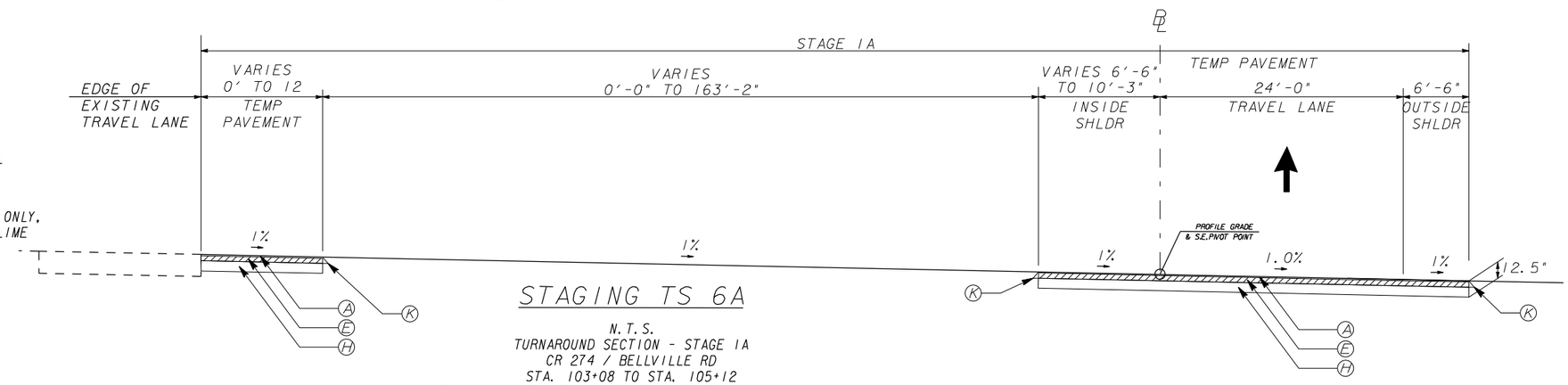

STAGING TS 6A

N.T.S.
TURNAROUND SECTION - STAGE 1A
CR 274 / BELLVILLE RD
STA. 103+08 TO STA. 105+12
STA. 128+05 TO STA. 131+93 (OPPOSITE HAND SECTION)

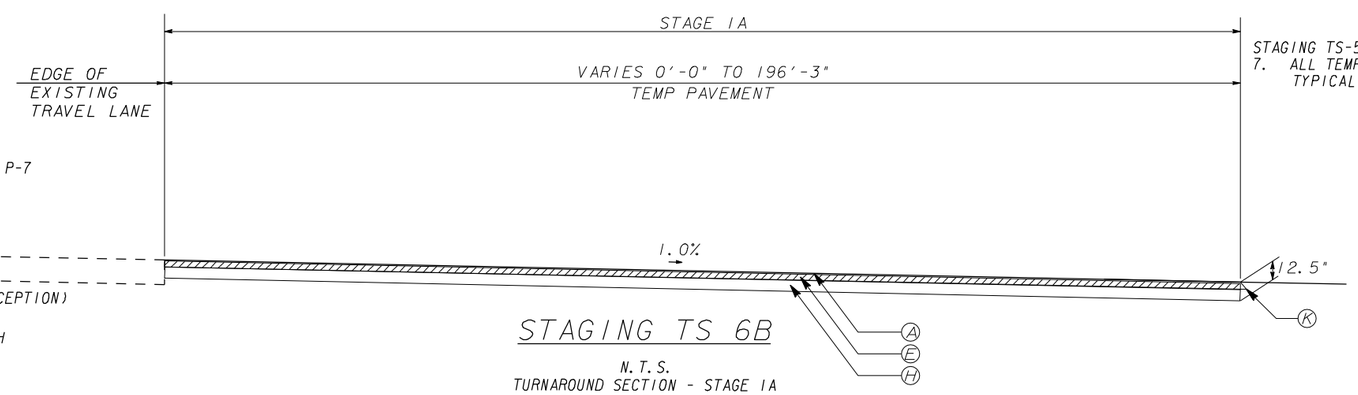

STAGING TS 6B

N.T.S.
TURNAROUND SECTION - STAGE 1A
CR 274 / BELLVILLE RD
STA. 103+08 TO STA. 105+12
STA. 128+05 TO STA. 131+93 (OPPOSITE HAND SECTION)

PAVEMENT DESIGN

- (A) RECYCLED ASPH CONC 12.5 MM SUPERPAVE, GP 2 ONLY, INCL BITUM MATL & H LIME 165 LBS/YD2
- (B) ASPH CONC 12.5 MM PEM, GP 2 ONLY, INCL POLYMER-MODIFIED BITUM MATL & H LIME 135 LBS/YD2
- (C) RECYCLED ASPH CONC 12.5 MM, SMA, GP 2 ONLY, INCL POLYMER-MODIFIED BITUM MATL & H LIME 220 LBS/YD2
- (D) RECYCLED ASPH CONC 19 MM SUPERPAVE, GP 1 OR 2, INCL BITUM MATL & H LIME 220 LBS/YD2
- (E) RECYCLED ASPH CONC 19 MM SUPERPAVE, GP 1 OR 2, INCL BITUM MATL & H LIME 330 LBS/YD2
- (F) RECYCLED ASPH CONC 25 MM SUPERPAVE, GP 1 OR 2, INCL BITUM MATL & H LIME 440 LBS/YD2
- (G) RECYCLED ASPH CONC 25 MM SUPERPAVE, GP 1 OR 2, INCL BITUM MATL & H LIME 880 LBS/YD2
- (H) GR AGGR BASE CRS, INCL MATL, 8"
- (I) GR AGGR BASE CRS, INCL MATL, 12"
- (J) PLAIN PC CONC PVMT, CL 3 CONC, 11 INCH THK
- (K) PAVEMENT EDGE TREATMENT, CONSTRUCTION DETAIL P-7
- (L) CONC CURB & GUTTER, 8 IN X 30 IN, TP 7
- (M) CONC CURB & GUTTER, 8 IN X 30 IN, TP 2
- (N) CONCRETE HEADER CURB, 6 IN, TP 7
- (O) CONCRETE HEADER CURB, 4 IN, TP 9
- (P) CONC SIDEWALK, 4 IN
- (Q) WHERE > 8', GRASS (SEE TS 5A, 5B, & 6 FOR EXCEPTION) WHERE < 8', CONCRETE MEDIAN, 4 IN
- (R) PVMT REINF FABRIC STRIPS, TP 2, 18 INCH WIDTH
- (S) INDENTATION RUMBLE STRIPS - GROUND-IN- PLACE (CONTINUOUS)
- (T) INDENTATION RUMBLE STRIPS - GROUND-IN- PLACE (SKIP)
- (U) MILL ASPH CONC PVMT, 1½ DEPTH

STAGING TS-5 TO TS-6B NOTE:
7. ALL TEMPORARY ASPHALT PAVEMENT SECTIONS NOT DEPICTED IN THE TYPICAL SECTIONS WILL BE THE SAME AS THE TEMPORARY PAVEMENT SHOWN.

NOTES:
1. SEE ROADWAY PLANS FOR LOCATION OF GUARDRAIL.
2. SLOPE: SEE ROADWAY PLANS FOR SUPERELEVATION RATES AND TRANSITIONS.
3. FOR METHOD OF SUPERELEVATION, SEE CONSTR PLAN & PROFILE SHEETS - CURVE DATA. LOCATIONS OF NORMAL CROWN & FULL S.E. NOTED ON CONSTR CENTERLINE.
4. SHOULDER MAY BE GRADED AWAY FROM ROADWAY TO FACILITATE THE SLOPE TIE TO EXISTING GROUND.
5. FOR RURAL SHOULDERS, SHOULDER TO SLOPE AT 6% OR SUPERELEVATION RATE, WHICHEVER IS GREATER. HOWEVER, THE ALGEBRAIC DIFFERENCE IN PAVING SLOPE AND SHOULDER SLOPE SHALL NOT EXCEED 8%. MINIMUM SHOULDER SLOPE TO BE 2%.
6. SEE ROADWAY PLANS FOR LOCATION OF WALL.

★ SEE PLAN SHEETS.

JACOBS™

NOT RELEASED FOR CONSTRUCTION

NOT TO SCALE

REVISION DATES

STATE OF GEORGIA
DEPARTMENT OF TRANSPORTATION
OFFICE: PROGRAM DELIVERY

TYPICAL SECTIONS

CR 274/BELLVILLE RD
@ I-75

DRAWING No. 5-011

GPLN

ALLOWABLE RANGES TABLE

FOR THIS PROJECT, CROSS SLOPES THAT ARE ADJUSTED TO "BEST FIT" EXISTING PAVEMENT SLOPES ARE SUBJECT TO THE FOLLOWING LIMITS:

A. NORMAL CROWN

SECTION WITH GRADES 0.5% OR GREATER	SECTION WITH GRADES LESS THAN 0.5%
0.0150 FT/FT - MINIMUM	0.0156 FT/FT - MINIMUM
0.0208 FT/FT - DESIRABLE	0.0208 FT/FT - DESIRABLE
0.0250 FT/FT - MAXIMUM	0.0300 FT/FT - MAXIMUM

B. SUPERELEVATION RATE

S.E. RATE SHOWN ON PLANS OR SE RATE EXISTING IN FIELD, WHICHEVER IS GREATER.

C. SUPERELEVATION TRANSITION LENGTH (LENGTH FROM FLAT POINT TO FULL SE)

	RATE OF CHANGE	CORRESPONDING DIFFERENCE IN GRADE BETWEEN PIVOT POINT AND EDGE OF PAVEMENT
MINIMUM	1:150	0.67%
DESIRABLE	1:200	0.50%
MAXIMUM	1:300	0.33%

LENGTH SHALL BE SET TO AVOID CREATING A FLAT GUTTER GRADE ON LOW SIDE AND TO AVOID FLAT CROSS SLOPES AT OR NEAR THE LOW POINT OF VERTICAL CURVES.

D. POSITIONING OF SUPERELEVATION TRANSITION LENGTH ON SIMPLE CURVES

50% OF TRANSITION INSIDE CURVE - MAXIMUM
33% OF TRANSITION INSIDE CURVE - DESIRABLE
20% OF TRANSITION INSIDE CURVE - MINIMUM

NOTE: CROWN WIPE-OUT SHALL BE AT THE SAME RATE AS THE SE TRANSITION.

E. SMOOTHING OF BREAKS IN EDGE PROFILE AT BEGIN AND END OF TRANSITION SHALL BE ACCOMPLISHED BY VERTICAL CURVE WITH A MINIMUM LENGTH (IN FEET) EQUAL TO THE SPEED DESIGN (IN MPH).

TYPICAL SECTION DETAIL TO BE USED WHEN EXISTING PAVEMENT IS TO BE RESURFACED WITH TWO INCHES OR MORE OF ASPHALTIC CONCRETE

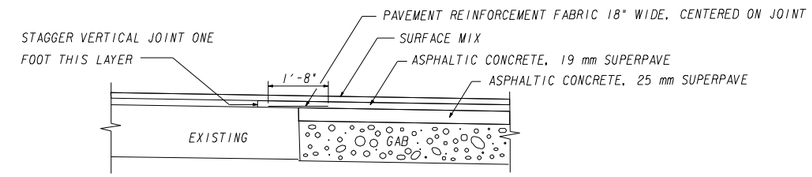

TYPICAL SECTION DETAIL TO BE USED WHEN EXISTING PAVEMENT IS TO BE RESURFACED WITH LESS THAN TWO INCHES OF ASPHALTIC CONCRETE

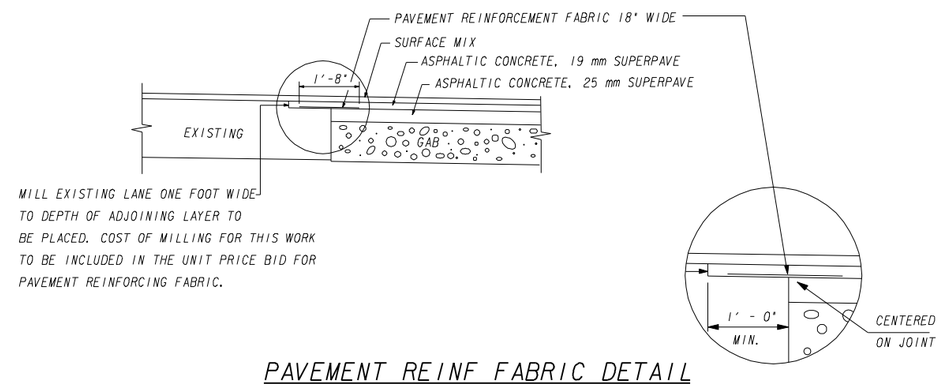

PAVEMENT REINF FABRIC DETAIL

N.T.S.

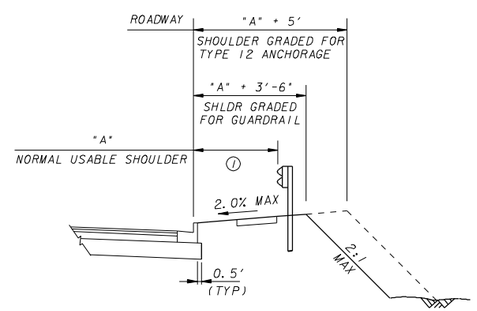

GUARDRAIL SHOULDER DETAIL - URBAN CURB & GUTTER

N.T.S.

SEE CONSTRUCTION PLANS FOR LOCATIONS

1 DISTANCE TO FACE OF GUARDRAIL VARIES FOR EACH ALIGNMENT

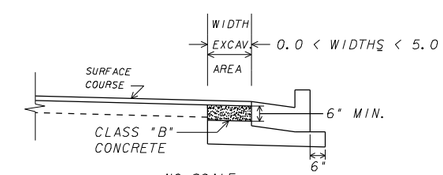

NO SCALE

CLASS "B" CONCRETE BASE OR PAVEMENT WIDENING

Item Code 500-9999 - Cu. Yds.

In excavated areas between the existing paving and new curb and gutter that are 5'-0" or less in width, Class "B" concrete shall be placed in lieu of the base and paving specified by the typical section. Payment will be made under "Class B Concrete Base and Pavement Widening".

In excavated areas greater than 5'-0" in width, the Contractor shall place base and paving as specified on the typical section.

See plans for details of curb and gutter construction.

CLASS "B" CONCRETE BASE OR WIDENING DETAIL

N.T.S.

JACOBS

NOT RELEASED FOR CONSTRUCTION

NOT TO SCALE

REVISION DATES

STATE OF GEORGIA
DEPARTMENT OF TRANSPORTATION

OFFICE: PROGRAM DELIVERY

TYPICAL SECTIONS

CR 274/BELLVILLE RD @ I-75

DRAWING No. 5-012

GPLN

JACOBS

Ten 10th Street, NW, Suite 1400
Atlanta, Georgia 30309
United States

FILE P.I. No. 0007386
CSNHS-0007-00(386)
Lowndes County
CR 274 / Bellville Road @ I-75 Interchange Reconstruction

DATE October 27, 2017

FROM Derrick D. Vincent, P.E., JACOBS Project Manager

TO Brent A. Story, P.E., State Design Policy Engineer

SUBJECT **Design Variance for a Break in Access Control**

Approval of a Design Variance is requested for this project.

PROJECT DESCRIPTION:

The proposed project consists of the CR 274/Bellville Road @ I-75 interchange reconstruction located at Exit 2 on I-75 in Lowndes County. The project involves the replacement of the existing bridge over I-75 and redirects the ramp termini into a roundabout configuration. The proposed bridge will be lengthened to accommodate any future widening of I-75 and moved 24 feet to the south of the current location to accommodate staging. The center of the bridge roughly divides the project limits in half, such that approximately 0.30 mile of the project is west of the bridge and 0.30 mile is east of the bridge. The bridge elevation will be raised two to three feet higher than the existing bridge to meet minimum clearance requirements for the I-75 overpass bridge. The proposed bridge will provide one lane in each direction, a raised median, sidewalk, and curb and gutter. Presently, the bridge and CR 274 / Bellville Road are rural sections with paved outside shoulders. See Figure 1 for the existing interchange layout.

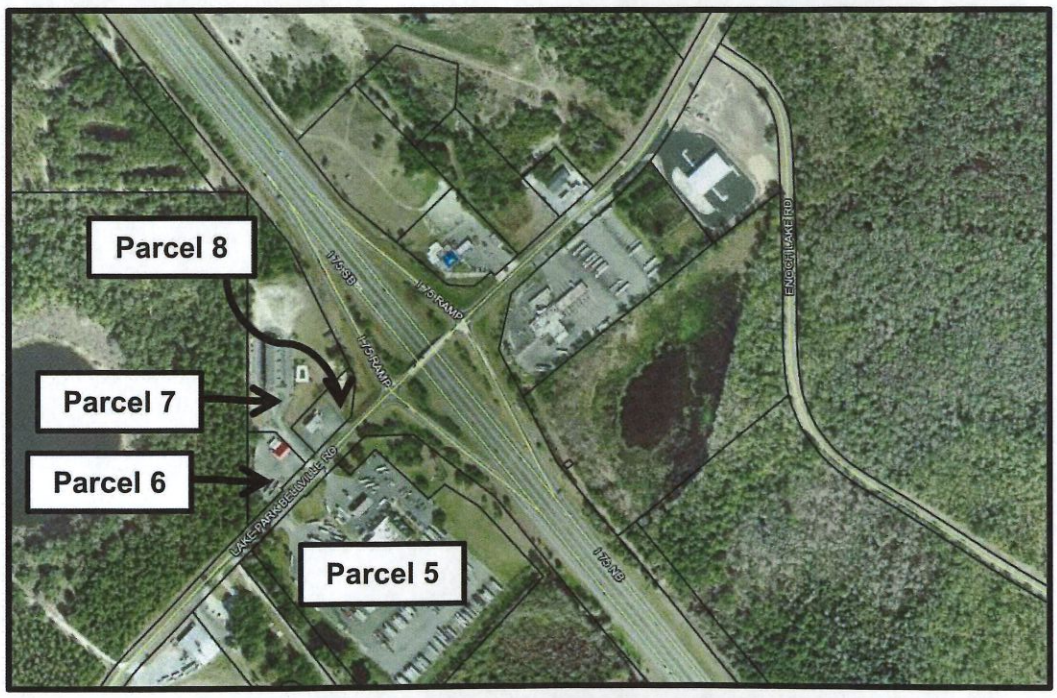

FIGURE 1: EXISTING INTERCHANGE LAYOUT

The posted speed for CR 274/Bellville Road is 45 miles per hour (mph). The proposed typical section will be a rural section with one through lane in each direction, a variable width flushed or raised median, and a paved outside shoulder before and after the approaches to the roundabouts. The design speed is 45 mph.

The typical section of the proposed roundabouts at each intersection of CR 274 / Bellville Road with the entrance/exit ramps as well as the approaches will be urban and include sidewalk, curb and gutter, raised islands/medians, and lighting. The middle of the roundabouts will include roadway signs, grassed areas and future potential landscaping. The design speed of the roundabouts is 25 mph.

FEATURES REQUIRING A DESIGN VARIANCE:

A Design Variance will be required for breaks in the proposed limit-of-access along CR 274/Bellville Road needed to provide ingress/egress to Parcels 5, 7, & 8. According to the 2017 GDOT Design Policy Manual (DPM) (Section 3.5.2 Access Management), access control shall not be less than 300 feet, at a minimum, for projects that involve an Interstate interchange. The distance is measured from the radius return of the ramp termini with the intersecting route (driveway). The DPM also states that coordination with the District office should be performed prior to making a request for a break in access control. All breaks in access control under the given conditions must have prior approval of a Design Variance from the Department's Chief Engineer. The proposed layout and driveway spacing are shown in Figure 2.

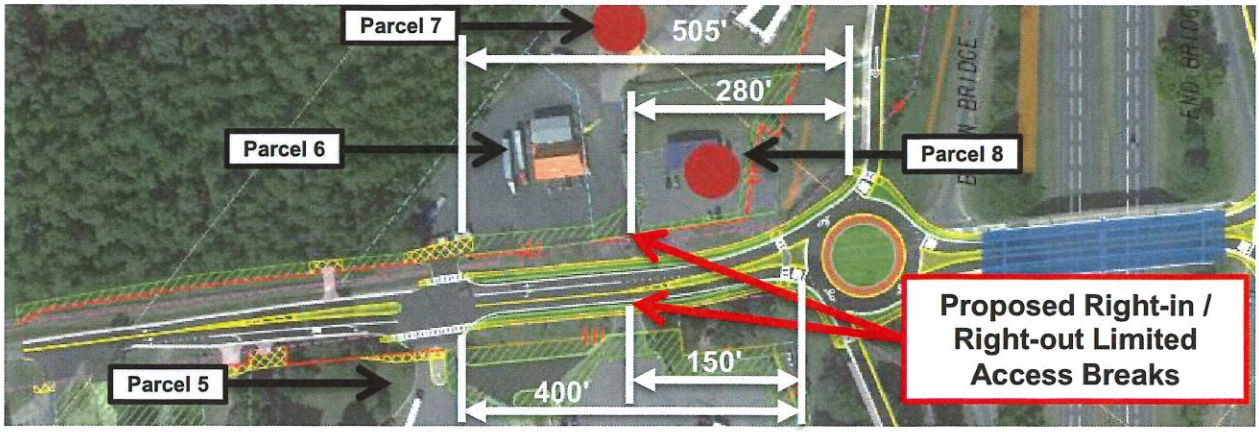

FIGURE 2: NO-BUILD CONDITIONS

See Table 1 for driveway locations and the existing, proposed, and minimum required distances needed for access control.

TABLE 1: ACCESS CONTROL ALONG CR 274/BELLVILLE ROAD

PARCEL	DISTANCE (Radius Return to Radius Return)		MINIMUM LIMITED ACCESS	VARIANCE REQUIRED?
	EXISTING	PROPOSED		
5	330'	150'	300'	YES
5	560'	400'	300'	NO
6	460'	505'	300'	NO
7	360'	280'	300'	YES
8	150' / 290'	REMOVED	300'	NO

Note: Mile Markers not found along CR 274

CURRENT AND FUTURE TRAFFIC DATA: CR 274/Bellville Road is classified as a Rural Major Collector and I-75 is classified as a Rural Interstate Principal Arterial. The 2016 Average Daily Traffic (ADT) along this section of roadway is 4,400 vehicles per day (vpd) with a peak hour flowrate of 275 vehicles per hour. The open year traffic (2022) has a projected ADT of 5,100 vpd, with a peak hour flowrate of 315 vehicles per hour. The future projected ADT (2042) is 8,400 vpd with a peak hour traffic of 515. The daily truck percentage is 58.5%

CRASH DATA: Accident history data was obtained from GDOT for the last three (3) available years (2013, 2014, and 2015) for the Exit 2 - CR 274/Bellville Road at I-75 interchange. Tables 2A and 2B summarize the historical number of crashes, injuries, and fatalities.

TABLE 2A: CRASH HISTORY SUMMARY (EXIT 2 - CR 274/BELLVILLE ROAD @ I-75)

Year	Annual Crashes	Crash Rate per 100 million vehicle-miles (MVM)		Annual Injuries	Injury Rate per 100 million vehicle-miles (MVM)		Annual Fatalities	Fatality Rate per 100 million vehicle-miles (MVM)	
		Road Segment	Statewide Average		Road Segment	Statewide Average		Road Segment	Statewide Average
2013	1	208	208	0	0	90	0	0	2.46
2014	1	208	199	0	0	89	1	208	3.11
2015	2	415	194	2	415	90	0	0	2.88

TABLE 2B: CRASH TYPE SUMMARY (EXIT 2 - CR 274/BELLVILLE ROAD @ I-75)

Year	Angle	Rear End	Side Swipe	Head On	Non-Collision	Pedestrian	**TOTAL**
2013	1	0	0	0	0	0	1
2014	0	0	0	1	0	0	1
2015	1	1	0	0	0	0	2

ALTERNATIVES CONSIDERED / RISK ASSESSMENT

The GDOT Design Policy Manual, Section 3.5.2, states that:

> "access rights should be acquired so that driveway connections are not allowed within the functional area of any intersection. The functional area of an intersection is the area where motorists are responding to the intersection, decelerating, and maneuvering into the appropriate lane to stop or complete a turn. Access connections too close to intersections can cause serious traffic conflicts that impair the function of the affected facility."

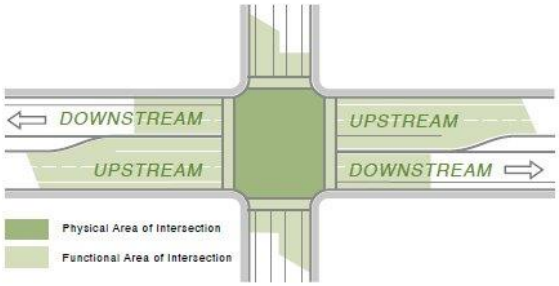

FIGURE 3: FUNCTIONAL AREA OF AN INTERSECTION
(SOURCE: https://safety.fhwa.dot.gov/intersection/other_topics/fhwasa10002/)

The Access Management Manual (TRB, 2003 – page 133) notes that, "stopping sight distance is one method for establishing the downstream functional distance of an intersection." With a fastest path speed of 25 mph for roundabouts, the recommended stopping sight distance is 155 feet. **Because the proposed right-in / right-out limited access break for Parcel 7 would located 280 feet from the roundabout intersection, it would not be within the downstream functional area of the interchange.** Calculations for the downstream functional area between the Parcel 7 driveway and Roundabout intersection are provided in Table 3, below.

TABLE 3: FUNCTIONAL AREA DOWNSTREAM OF ROUNDABOUT

Elements of Functional Area	Notes	Distance (at 25 mph)
d1 (perception reaction time)	2.5 second	91.9 feet
d2 (deceleration distance)	-11.2 fps^2	60.3 feet
	TOTAL*	155 feet

*value rounded to the nearest 5 feet

The Access Management Manual (TRB, 2003 – page 131) notes that upstream functional distance of an intersection consist of three elements "Distance traveled during a perception-reaction time, d1; Deceleration distance while the driver maneuvers to a stop, d2; and Queue storage, d3." With an approach speed of 45 mph for roundabout and a queue of 91 feet, the upstream functional area for the eastbound approach to the roundabout is 435 feet. **Therefore the proposed right-in / right-out limited access break for Parcel 5 would be within the functional area of the roundabout intersection.** Calculations for the upstream functional area between the Parcel 5 driveway and roundabout intersection are provided in Table 4, below.

TABLE 4: FUNCTIONAL AREA UPSTREAM FROM ROUNDABOUT

Elements of Functional Area	Notes	Distance (at 45 mph)*
d1 (perception reaction time)	2.5 second	165.4 feet
d2a (maneuver distance)	No lane change	0 feet
d2b (deceleration distance)	-11.2 fps^2; 3% uphill	178.7 feet
d3 (queue distance)	95th percentile for 2042	91 feet
	TOTAL*	435 feet

*value rounded to the nearest 5 feet

The Access Management Manual (TRB, 2003 – page 134) states that:

> "Where property frontage is within the functional intersection area and alternative access is not available or cannot be provided at reasonable cost, it may be necessary to permit an access connection. In such cases, including the following conditions in the access permit can minimize the adverse impacts of the connection: (a) require that the access connection be located as far as possible from the intersection; (b) limit movements to right in/right out; and (c) limit the volume of traffic that may use the connection."

Because the driveway for Parcel 5 is within the functional area of the roundabout intersection, it is recommended that the access be limited to right-in / right-out movements. It is further recommended that the proposed access be positioned at the most optimal location, based on the physical layout of the roadway and adjacent properties.

With the proposed limited access breaks, the Build conditions would still have many safety benefits west of the interchange over the No-Build conditions. These are summarized in Table 5 and described further below:

TABLE 5: ALTERNATIVES COMPARISON (WEST OF INTERCHANGE)

#	Comparison	No-Build	Build With Variance	Potential Safety Impact
1	# Driveways (within 0.3 mile segment)	6	4	9% crash reduction along road segment
2	Median	Not Present	Present	39% crash reduction at RIRO driveways
3	Distance from Ramp to Closest Driveway	150'	150'	No measurable change in crashes
4	Street Lighting	Not Present	Present	≥ 17% reduction in night time crashes

1) The proposed conditions would reduce the number of access points on the west side of the interchange from six (6) driveways to four (4) driveways.
   - The 2010 Highway Safety Manual (HSM), Section 14A.3.1.1 (page 14-45) states that restricting access to commercial properties near intersections by closing private driveways on major roads reduces conflicts between through and turning traffic. This reduction in conflicts may lead to reductions in rear-end crashes related to speed changes near the driveways, and angle crashes related to vehicles turning into and out of driveways.
   - Based on HSM Section 13.14.2, Equation 13-7 (page 13-51), the impacts of decreasing access point density from 6 to 4 on a 0.3 miles of rural two-lane road with 8,400 vehicles per day roadway is expected to be a 9% reduction in crashes.
2) The proposed conditions would place a raised median along CR274 / Bellville Road west of the roundabout.
   - HSM Section 13.4.2.6,Table 13-10 (page 13-14) shows that, by providing a median on an urban two-lane road, one could expect a potential 39% reduction in crashes that may be related to the restriction of turning maneuvers at minor intersections and access points.
3) Distances between the roundabout intersection and closest driveway would not worsen from the existing conditions.
   - The proposed right-in / right-out driveway for Parcel 5 will be just as close as the existing Parcel 8 full-access driveway (which will be removed). See Table 1 for more detail.
4) The proposed design will include street lighting, which is not currently being provided.
   - There is an expected 18-19% reduction in nighttime injury crashes and 17-20% reduction in nighttime non-injury-crashes by providing highway lighting on roadway segments that previously had no lighting, HSM Section 13.13.2.1 and Table 13-56 (page 13-49).

COST TO MEET STANDARD CRITERIA The estimated costs to meet minimum access control requirements are related to Right-of-Way acquisition and are shown below. The additional cost for Parcel 5 is related to change of access. The additional costs for Parcels 7 and 8 are related to damages due to loss of access.

Right-of-Way (Parcel 5)	$ 500,000
Right-of-Way (Parcel 7)	$ 800,000
Right-of-Way (Parcel 8)	$ 300,000
TOTAL	**$1,600,000**

JACOBS

WHY THE CURRENT STANDARD CRITERIA CANNOT BE MET The current GDOT Standard Criteria cannot be met without closing four (4) existing driveways. Closing the drives to Parcels 7 and 8 will displace two (2) commercial businesses. Closing the second drive to Parcel 5 will change the access for passenger cars forcing them to use the same entrance as the semi-trucks. The estimated damages due solely to access change or loss totals $1,600,000.

MITIGATION PROPOSED A break in the limited access will be required for ingress/egress to Parcels 5, 7, and 8. In order to mitigate the substandard access control distances, the driveways will be designed for right-in / right-out only access and a raised concrete median will be added to separate opposing traffic at this location. This will reduce the number of conflict points and provide additional safety measures. An advance warning sign will be added to inform the driver of the upcoming westbound driveway and to increase driver awareness. A One-Way sign (R6-2) will be placed in the median and No Left Turn signs (R3-2) will be placed to the right of the driveways. A Reduced Speed Limit Ahead sign (W3-5) and a 25 mph Speed Limit sign (R2-1) will also be provided. The 25 mph design speed for the roundabout and the urban typical section will also help manage operating speeds.

RECOMMENDATION We recommend approval of this design variance for implementation due to adverse effects caused to commercial properties, including two (2) displacements, to meet the 300-ft Minimum Access Control requirement in the GDOT Design Policy Manual, current edition.

Engineer of Record contact information: Tonia Brown, Tonia.Brown@jacobs.com, (404) 978-7507

Recommend:	Tonia Brown Engineer of Record	10/27/17 Date
Concur:	Hial Bell GDOT Director of Engineering	11/20/17 Date
Approve:	Margaret B. Pinkelo GDOT Chief Engineer	11/22/17 Date

Attachments: Cover, plan sheet and driveway profiles

Brown, Tonia

From: Collin Lane <clane@edwards-pitman.com>
Sent: Tuesday, April 17, 2018 7:37 AM
To: Dawood, Laura
Cc: Vincent, Derrick D.; Brown, Tonia
Subject: [EXTERNAL] RE: 0007386 Lowndes

Laura,

The cost of mitigation credits has not changed per the April 2018 Estimated Costs for Mitigation Credits for either HUC 03110202 or 03110203. I have not recalculated impacts for the project since we are waiting on newer plans. With that being said, I would use the previous estimated mitigation cost for now for this project:

For PI No. 0007386
Wetland Credits – HUC 03110202 – 11.74 X $4000 = $46,960
Wetland Credits – HUC 03110203 – 10.44 X $4000 = $41,760

Thank you,
Collin

From: Dawood, Laura <Laura.Dawood@aecom.com>
Sent: Friday, April 13, 2018 6:01 AM
To: Collin Lane <clane@edwards-pitman.com>
Cc: Derrick D. Vincent (Derrick.Vincent@jacobs.com) <Derrick.Vincent@jacobs.com>; Brown, Tonia (Tonia.Brown@jacobs.com) <Tonia.Brown@jacobs.com>
Subject: 0007386 Lowndes

Morning Collin,
There has been a request to update the mitigation fees.

Would you please provide an updated cost for mitigation for this project?

Thanks,
Laura

Laura Dawood
NEPA Project Manager
Direct 770.548.9904
laura.dawood@aecom.com

AECOM
1360 Peachtree Street, Ste. 500
Atlanta, Georgia 30309
T 404-965-9600 F 1-678-808-8400
www.aecom.com

Table 3. Wetland and Open Water Mitigation Worksheet
GDOT Project Number CSNHS-0007-00(386)
PI No. 0007386, Lowndes County
HUC 03110203

ADVERSE IMPACT FACTORS

Factor	Options						
Dominant Effect	Fill 2.0	Impound 1.8	Dredge 1.6	Drain 1.4	Flood 1.2	Clear 1.0	Shade 0.5
Duration of Effects	7+ years 2.0	5-7 years 1.5	3-5 years 1.0	1-3 years 0.5	<1 year 0.1		
Existing Condition	Class 1 2.0	Class 2 1.5	Class 3 1.0	Class 4 0.5	Class 5 0.1		
Lost Kind	Kind A 2.0	Kind B 1.5	Kind C 1.0	Kind D 0.5	Kind E 0.1		
Preventability	High 2.0	Moderate 1.0	Low 0.5	None 0			
Rarity Ranking	Rare 2.0	Uncommon 0.5	Common 0.1				

REQUIRED MITIGATION CREDITS WORKSHEET

Factor	Wetland 1 - Emergent Permanent	Wetland 1 - Forested - Temporary	Wetland 1 - Emergent Temporary	Open Water 2A - Fill	Wetland 4 Fill
Dominant Effect	2.0	1.0	1.0	2.0	2.0
Duration of Effects	2.0	2.0	0.1	2.0	2.0
Existing Condition	0.5	1.5	0.5	0.1	0.1
Lost Kind	1.0	1.5	1.0	0.1	1.0
Preventability	0.5	0.5	0.5	0.5	0.5
Rarity Ranking	0.1	0.1	0.1	0.1	0.1
Sum of r Factors (R)	6.1	6.6	3.2	4.8	5.7
Impacted Area (AA)	0.54	0.11	1.28	0.02	0.39
R x AA	3.29	0.73	4.10	0.10	2.22

Total Credits HUC 03110203 **10.44**

Table 3. Wetland and Open Water Mitigation Worksheet
GDOT Project Number CSNHS-0007-00(386)
PI No. 0007386, Lowndes County
HUC 03110202

ADVERSE IMPACT FACTORS

Factor	Options						
Dominant Effect	Fill 2.0	Impound 1.8	Dredge 1.6	Drain 1.4	Flood 1.2	Clear 1.0	Shade 0.5
Duration of Effects	7+ years 2.0	5-7 years 1.5	3-5 years 1.0	1-3 years 0.5	<1 year 0.1		
Existing Condition	Class 1 2.0	Class 2 1.5	Class 3 1.0	Class 4 0.5	Class 5 0.1		
Lost Kind	Kind A 2.0	Kind B 1.5	Kind C 1.0	Kind D 0.5	Kind E 0.1		
Preventability	High 2.0	Moderate 1.0	Low 0.5	None 0			
Rarity Ranking	Rare 2.0	Uncommon 0.5	Common 0.1				

REQUIRED MITIGATION CREDITS WORKSHEET

Factor	Wetland 1A5 Fill	Wetland 1A5 Temporary	Wetland 1C Fill	Wetland 2 Fill	Wetland 2 Temporary	Wetland 5 Fill	Wetland 10 Fill
Dominant Effect	2.0	1.0	2.0	2.0	1.0	2.0	2.0
Duration of Effects	2.0	0.1	2.0	2.0	2.0	2.0	2.0
Existing Condition	0.1	0.1	0.1	1.5	1.5	0.1	0.1
Lost Kind	0.1	0.1	0.1	1.5	1.5	1.0	1.0
Preventability	0.5	0.5	0.5	0.5	0.5	0.5	0.5
Rarity Ranking	0.1	0.1	0.1	0.1	0.1	0.1	0.1
Sum of r Factors (R)	4.8	1.9	4.8	7.6	6.6	5.7	5.7
Impacted Area (AA)	0.03	0.35	0.07	0.01	0.52	0.38	0.07
R x AA	0.14	0.67	0.34	0.08	3.43	2.17	0.40

Subtotal Credits HUC 03110202 (page 2) **7.22**

Table 3. Wetland and Open Water Mitigation Worksheet
GDOT Project Number CSNHS-0007-00(386)
PI No. 0007386, Lowndes County
HUC 03110202

ADVERSE IMPACT FACTORS

Factor	Options						
Dominant Effect	Fill 2.0	Impound 1.8	Dredge 1.6	Drain 1.4	Flood 1.2	Clear 1.0	Shade 0.5
Duration of Effects	7+ years 2.0	5-7 years 1.5	3-5 years 1.0	1-3 years 0.5	<1 year 0.1		
Existing Condition	Class 1 2.0	Class 2 1.5	Class 3 1.0	Class 4 0.5	Class 5 0.1		
Lost Kind	Kind A 2.0	Kind B 1.5	Kind C 1.0	Kind D 0.5	Kind E 0.1		
Preventability	High 2.0	Moderate 1.0	Low 0.5	None 0			
Rarity Ranking	Rare 2.0	Uncommon 0.5	Common 0.1				

REQUIRED MITIGATION CREDITS WORKSHEET

Factor	Wetland 10 Temporary	Wetland 2B Fill	Wetland 2B Temporary
Dominant Effect	1.0	2.0	0.1
Duration of Effects	0.1	2.0	0.1
Existing Condition	0.1	0.5	0.5
Lost Kind	1.0	1.0	1.0
Preventability	0.5	0.5	0.5
Rarity Ranking	0.1	0.1	0.1
Sum of r Factors (R)	2.8	6.1	2.3
Impacted Area (AA)	0.29	0.51	0.26
R x AA	0.81	3.11	0.60

Prepared by: CTL - 08.29.16

Subtotal Credits HUC 03110202/Page 3	**4.52**
Total Credits Required	**22.17**
Required Credits HUC 03110202	**11.74**
Required Credits HUC 03110203	**10.44**

Department of Transportation
State of Georgia

INTERDEPARTMENT CORRESPONDENCE

FILE Lowndes County
P.I. # 0007386 & 0010297

OFFICE Planning

DATE June 27, 2018

FROM Paul Tanner, State Transportation Planning Administrator

TO Kimberly Nesbitt, State Program Delivery Administrator
Attention: Cleopatra James

SUBJECT **Design Traffic Forecasts** for I-75 @ CR 274/LAKE PARK-BELLVILLE ROAD – PHASE II and I-75 @ SR 31 – PHASE II

Per request, we have reviewed the consultant's design traffic forecasts for the above project. Based on the information furnished, we find the design traffic forecasts to be satisfactory, and the design traffic forecasting task to be complete for the above project. The reviewed and approved design traffic forecast for the above project is attached in Lowndes County Traffic Forecasting Report 06-20-18.pdf, Traffic Diagrams PSET Bellville 06-19-18.pdf, Traffic Diagrams PSET SR31 06-19-18.pdf, and Traffic Projection Diagrams 06-19-18.dgn.

If you have any questions concerning this information please contact Andre Washington at 404-631-1925.

Andre Washington
Office Of Planning
5th Floor, One Georgia Center
404-631-1925

RPT/AMW

COUNTY	PROJECT NUMBER	SHEET NO.	TOTAL SHEETS
LOWNDES	NHS-007-00(386)	1	4

EXISTING 2016 DHV
SITE 1: CR 274/BELLVILLE ROAD

0000 - AM PEAK HOUR
(0000) - PM PEAK HOUR

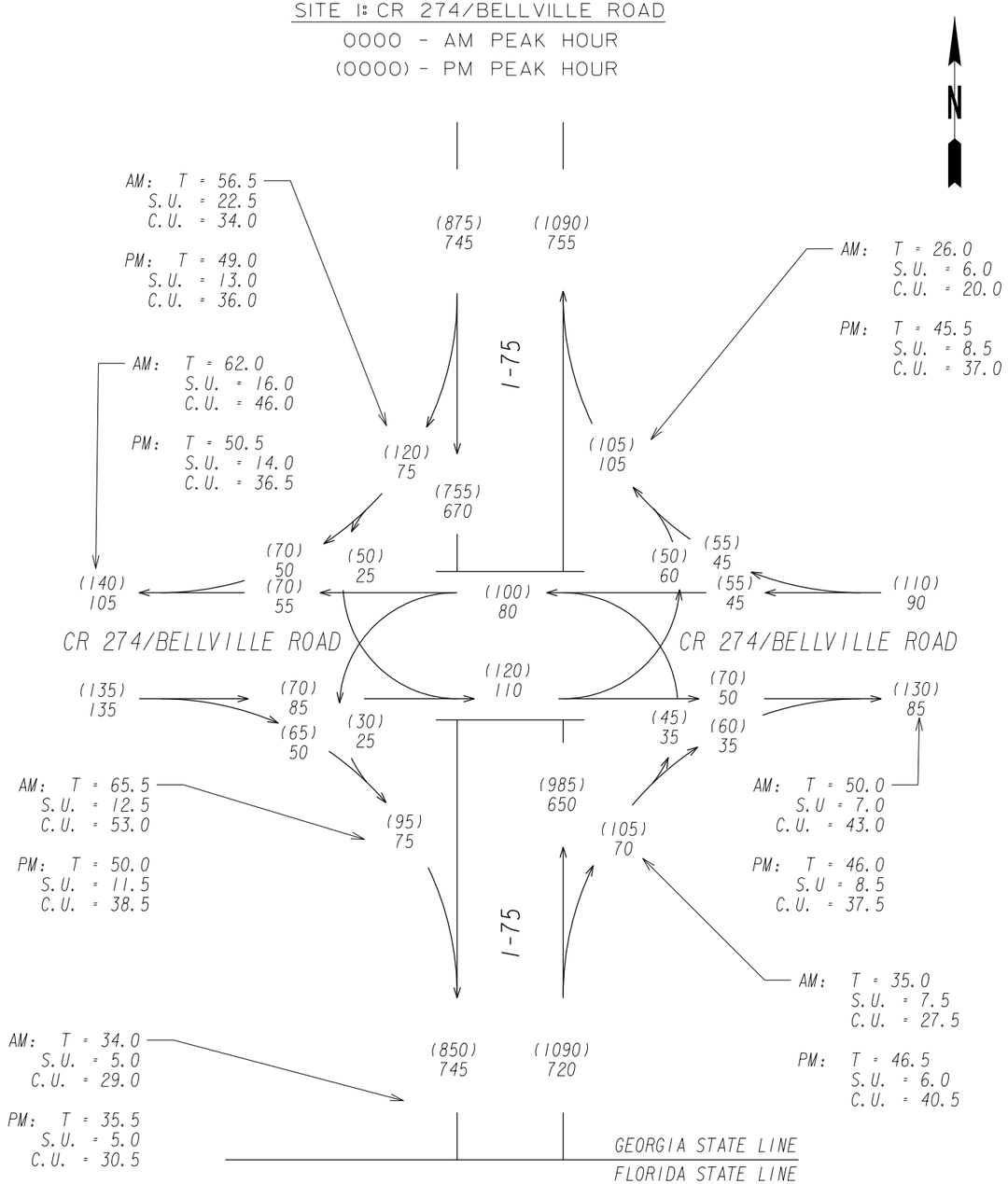

EXISTING 2016 AADT
SITE 1: CR 274/BELLVILLE ROAD

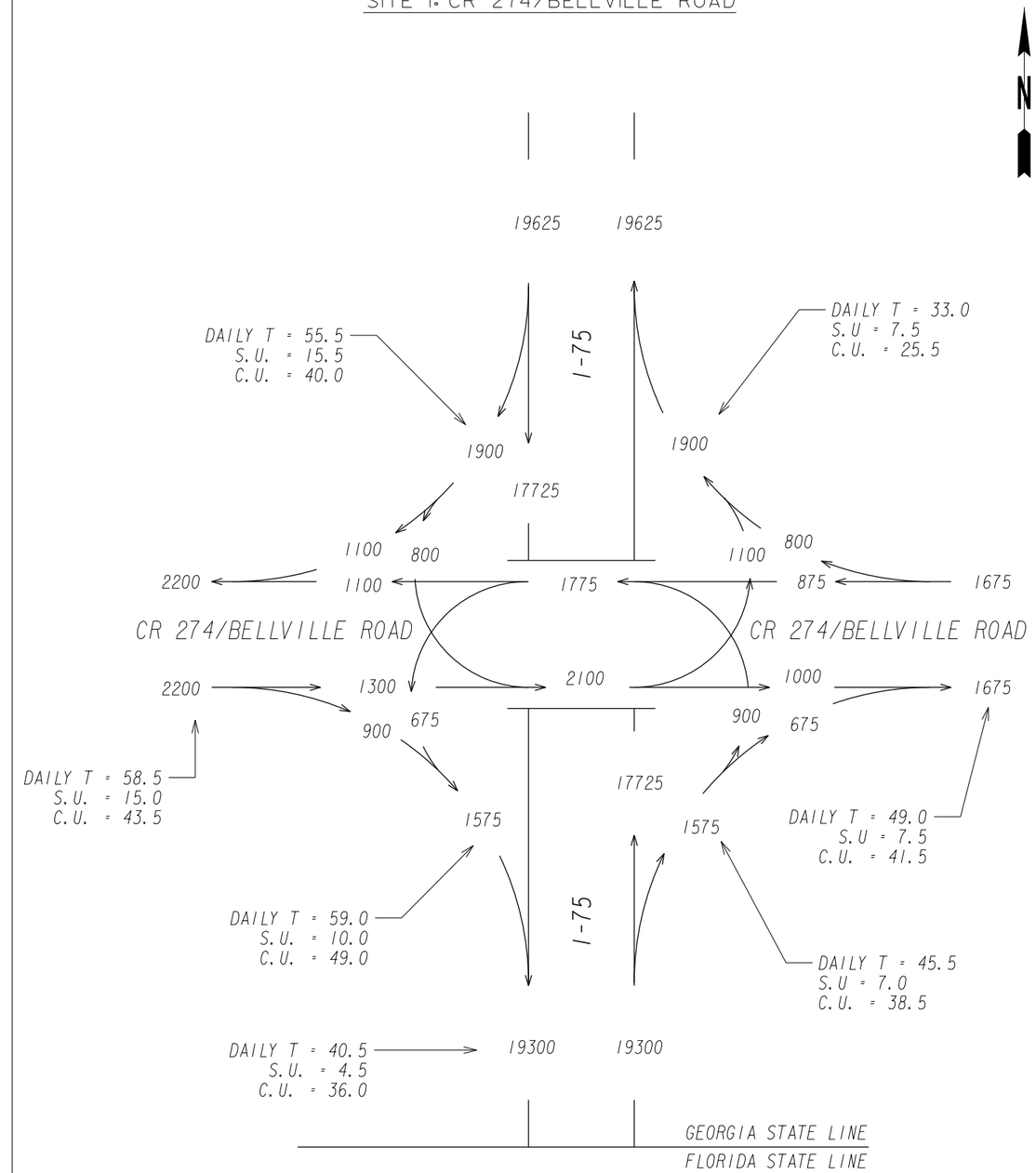

P.I. NO. 0007386
LOWNDES COUNTY

JACOBS

SCALE: N.T.S.

REVISION DATES		

STATE OF GEORGIA
DEPARTMENT OF TRANSPORTATION

NOVEMBER 2016

TRAFFIC DIAGRAM

DIAGRAM 1: EXISTING 2016 DHV AND AADT VOLUMES
(NO BUILD)

DRAWING No.
10-001

COUNTY	PROJECT NUMBER	SHEET NO.	TOTAL SHEETS
LOWNDES	NHS-007-00(386)	2	4

2022 DHV

SITE 1: CR 274/BELLVILLE ROAD

0000 - AM PEAK HOUR

(0000) - PM PEAK HOUR

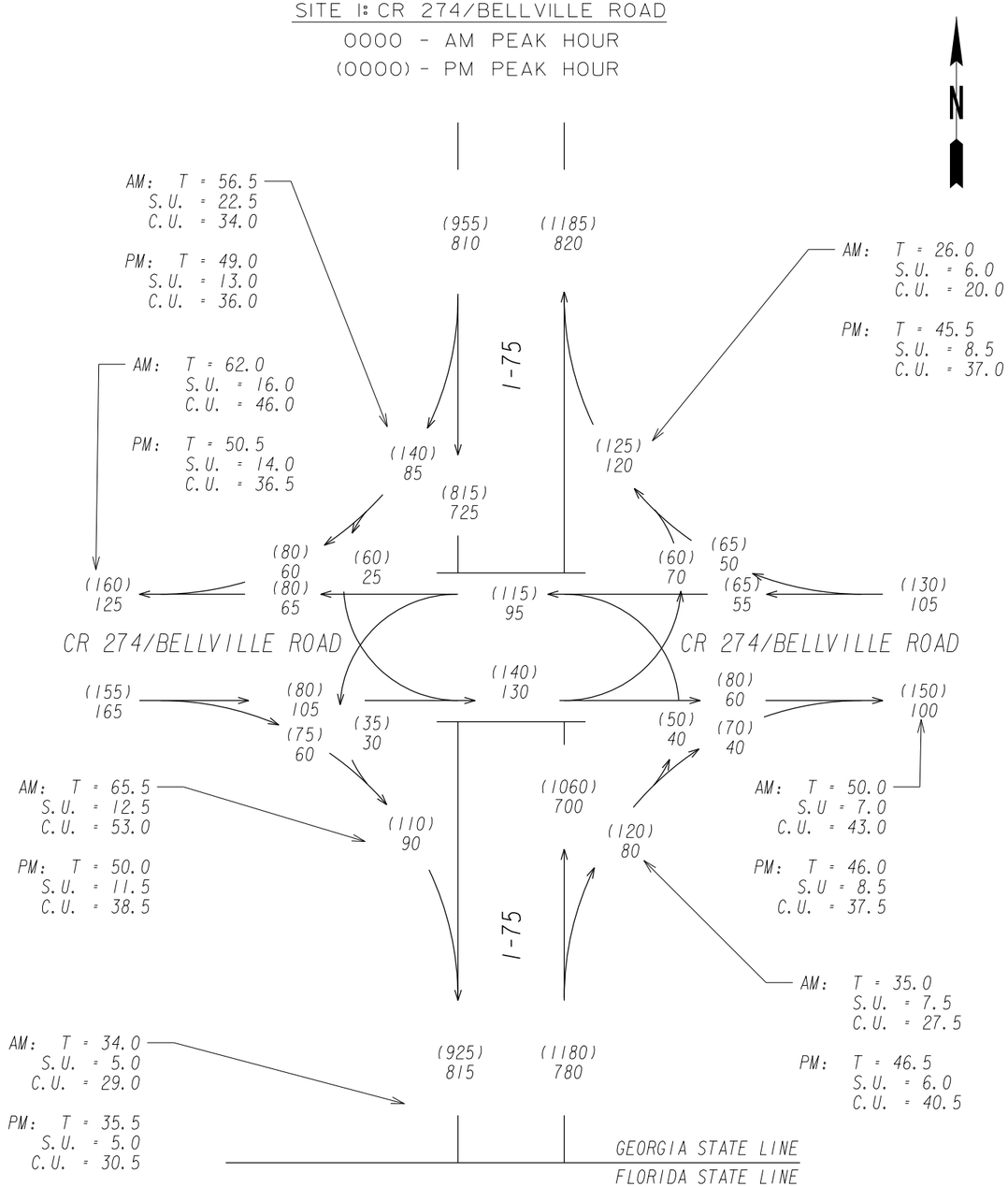

2042 DHV

SITE 1: CR 274/BELLVILLE ROAD

0000 - AM PEAK HOUR

(0000) - PM PEAK HOUR

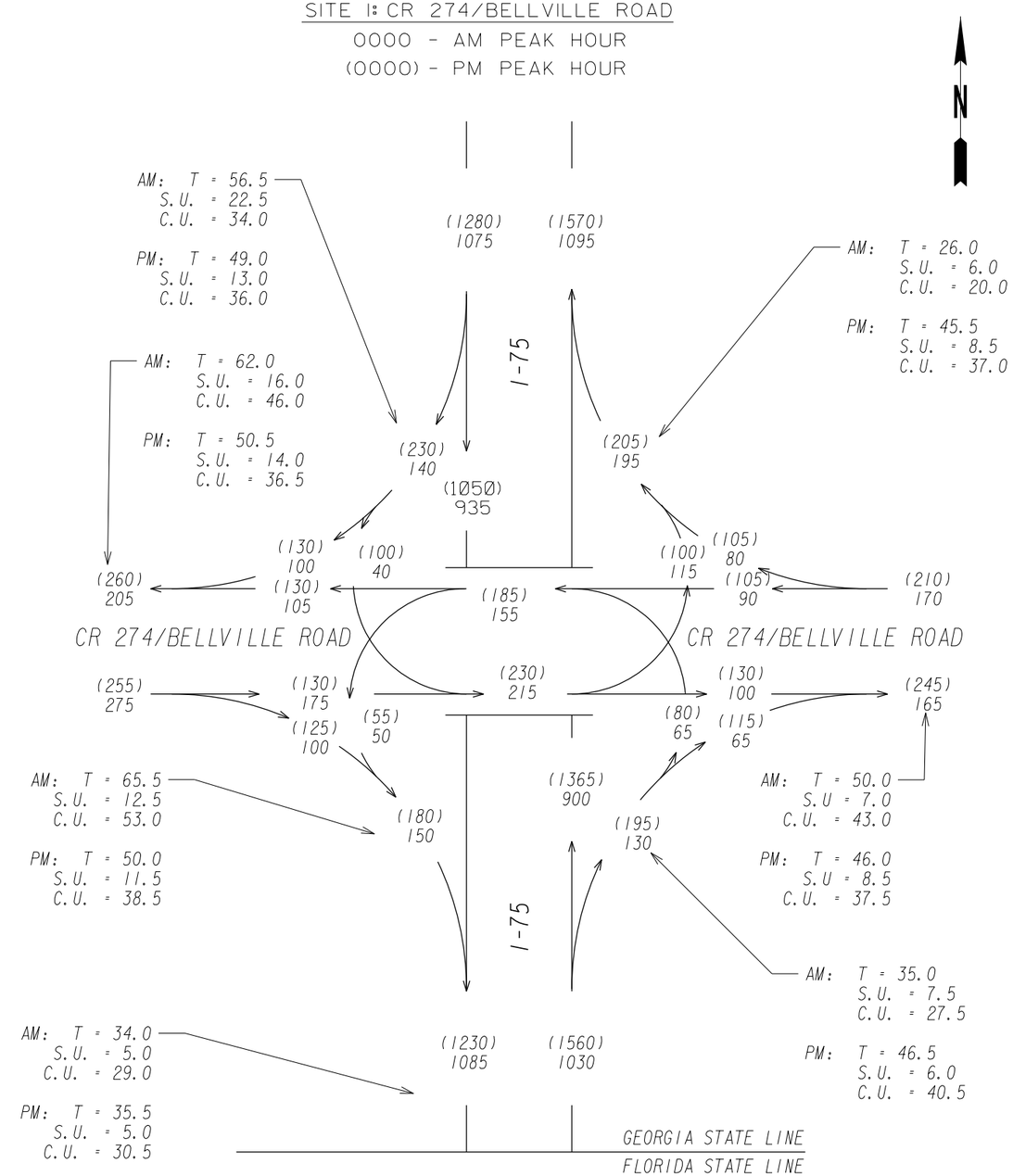

P.I. NO. 0007386
LOWNDES COUNTY

JACOBS

SCALE: N.T.S.

REVISION DATES		

STATE OF GEORGIA
DEPARTMENT OF TRANSPORTATION

NOVEMBER 2016

TRAFFIC DIAGRAM

DIAGRAM 2: 2022 AND 2042 DHV VOLUMES (NO BUILD)

DRAWING No. 10-002

COUNTY	PROJECT NUMBER	SHEET NO.	TOTAL SHEETS
LOWNDES	NHS-007-00(386)	3	4

2024 DHV

SITE 1: CR 274/BELLVILLE ROAD

0000 - AM PEAK HOUR

(0000) - PM PEAK HOUR

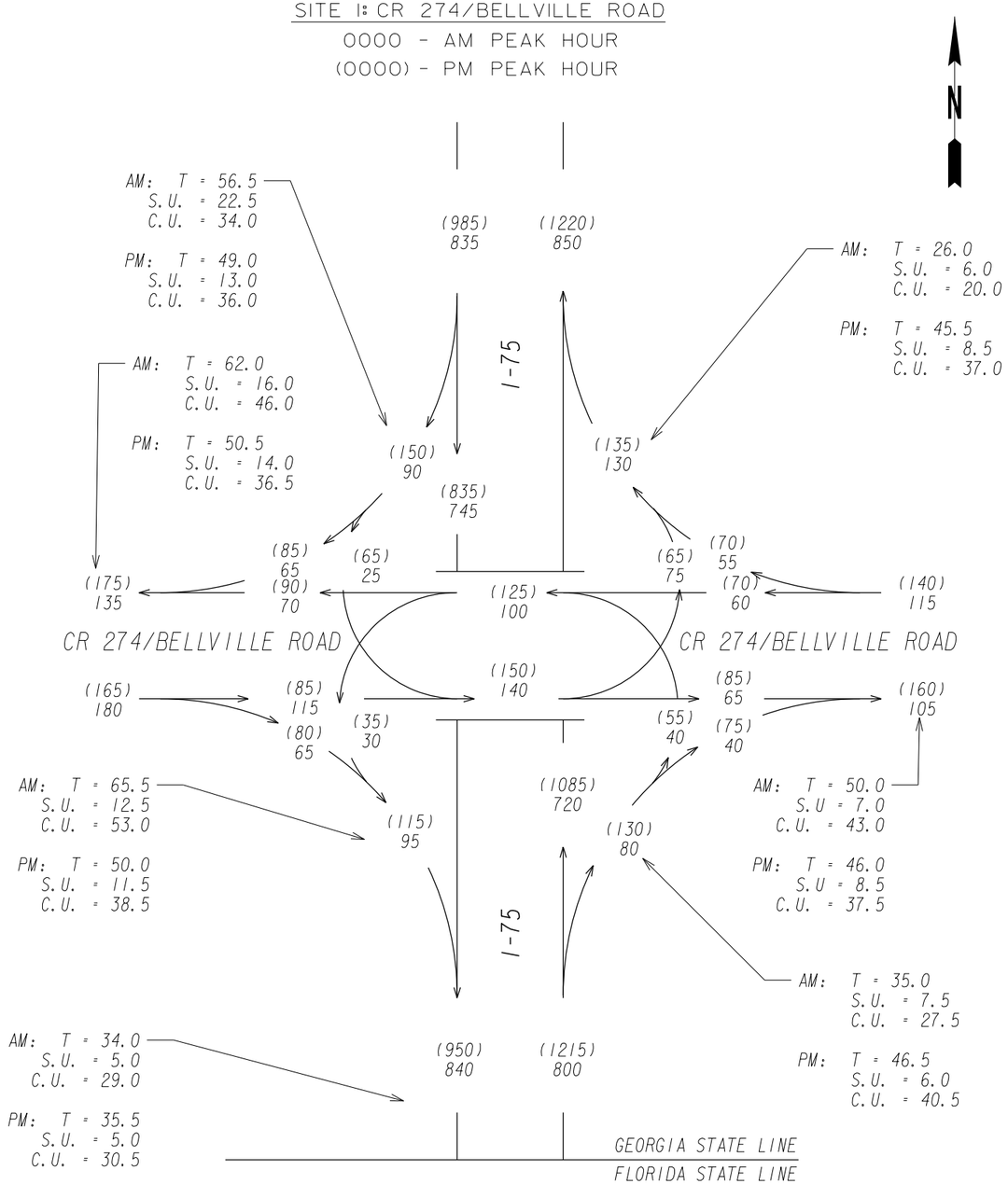

2044 DHV

SITE 1: CR 274/BELLVILLE ROAD

0000 - AM PEAK HOUR

(0000) - PM PEAK HOUR

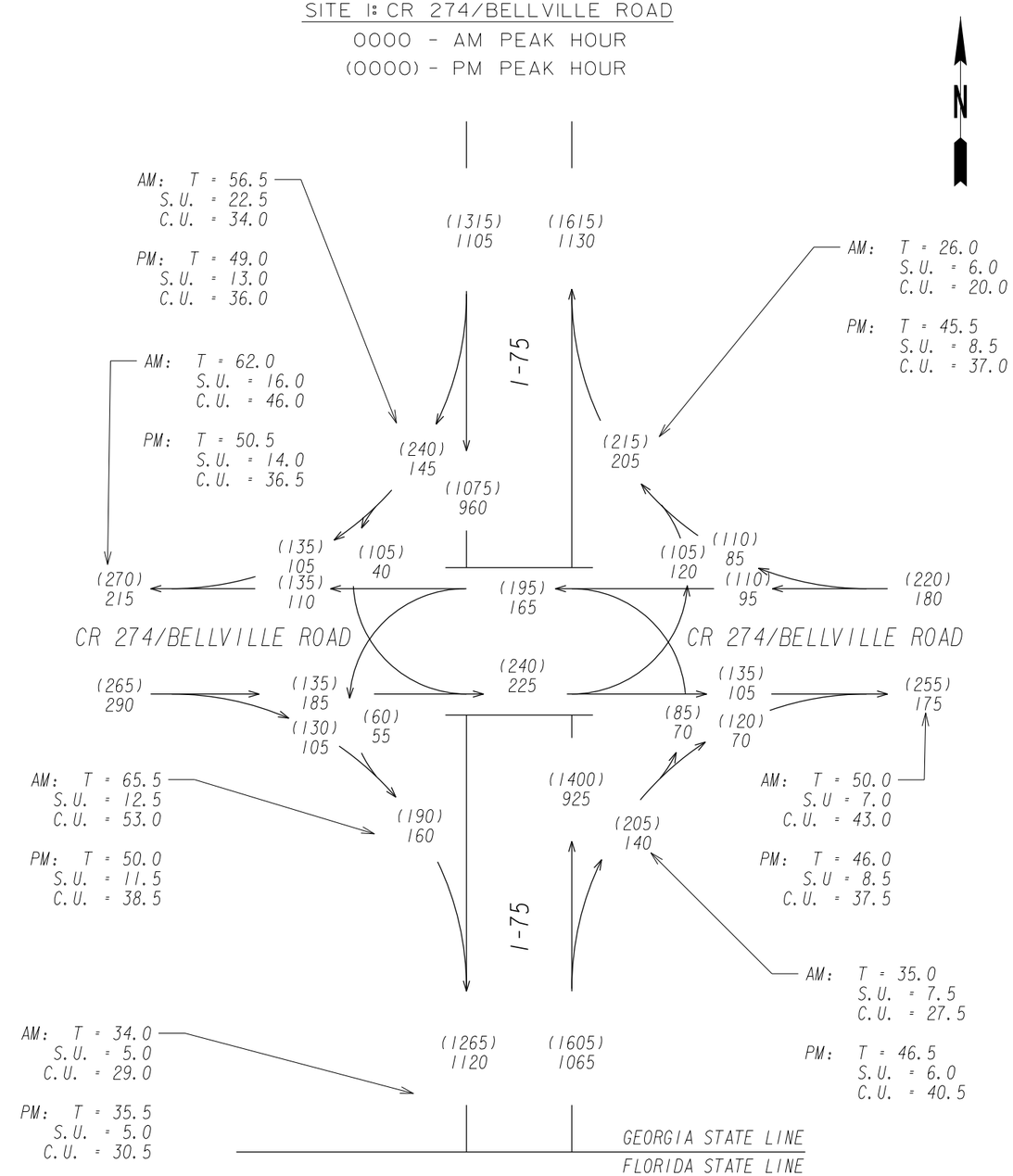

P.I. NO. 0007386
LOWNDES COUNTY

JACOBS

SCALE: N.T.S.

REVISION DATES		

STATE OF GEORGIA
DEPARTMENT OF TRANSPORTATION

NOVEMBER 2016

TRAFFIC DIAGRAM

DIAGRAM 3: 2024 AND 2044 DHV VOLUMES (NO BUILD)

DRAWING No. 10-003

COUNTY	PROJECT NUMBER	SHEET NO.	TOTAL SHEETS
LOWNDES	NHS-007-00(386)	4	4

DESIGN (2042) AND BASE 2022 AADT
SITE 1: CR 274/BELLVILLE ROAD

0000 - BASE YEAR
(0000) - DESIGN YEAR

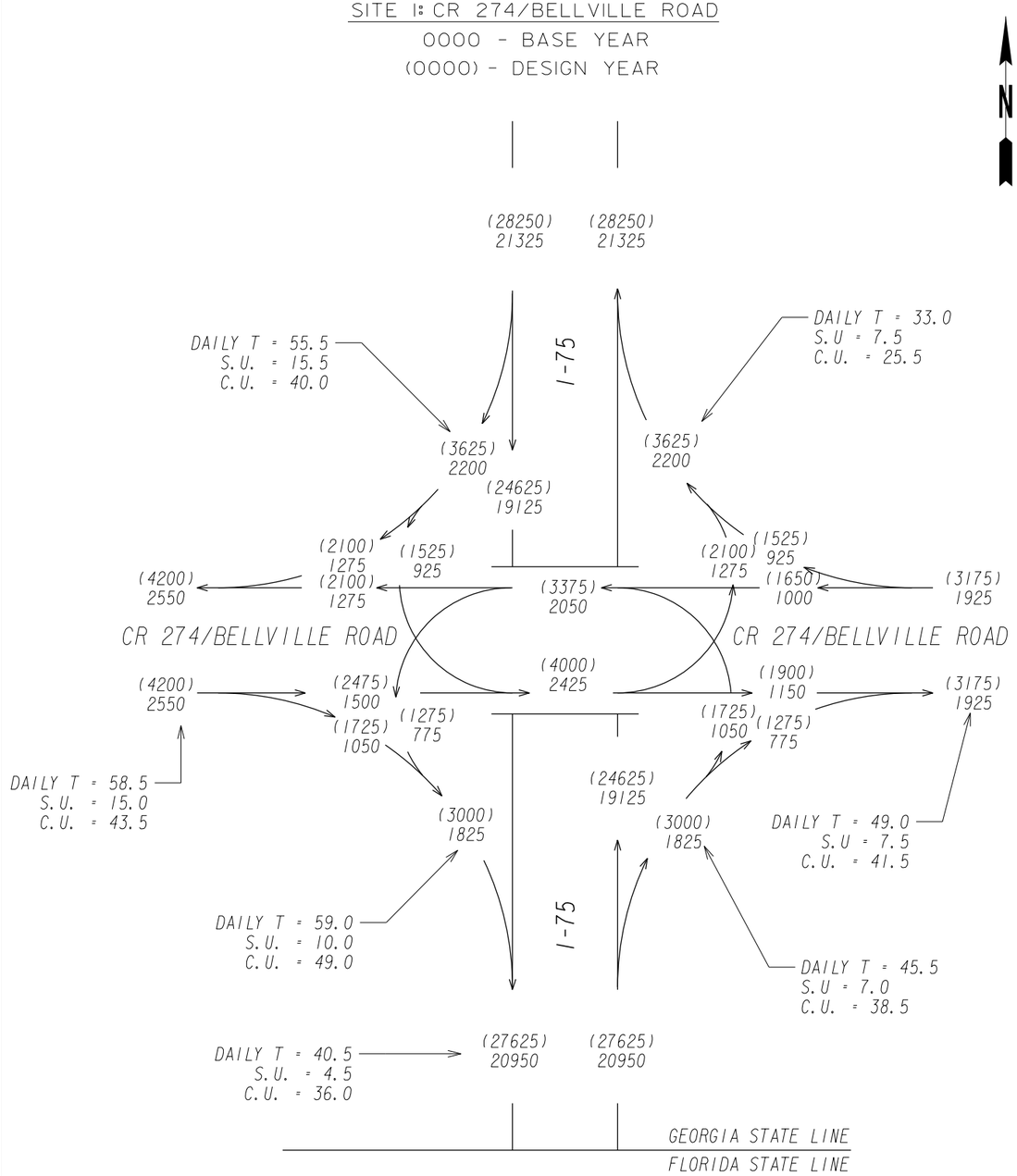

DESIGN (2044) AND BASE 2024 AADT
SITE 1: CR 274/BELLVILLE ROAD

0000 - BASE YEAR
(0000) - DESIGN YEAR

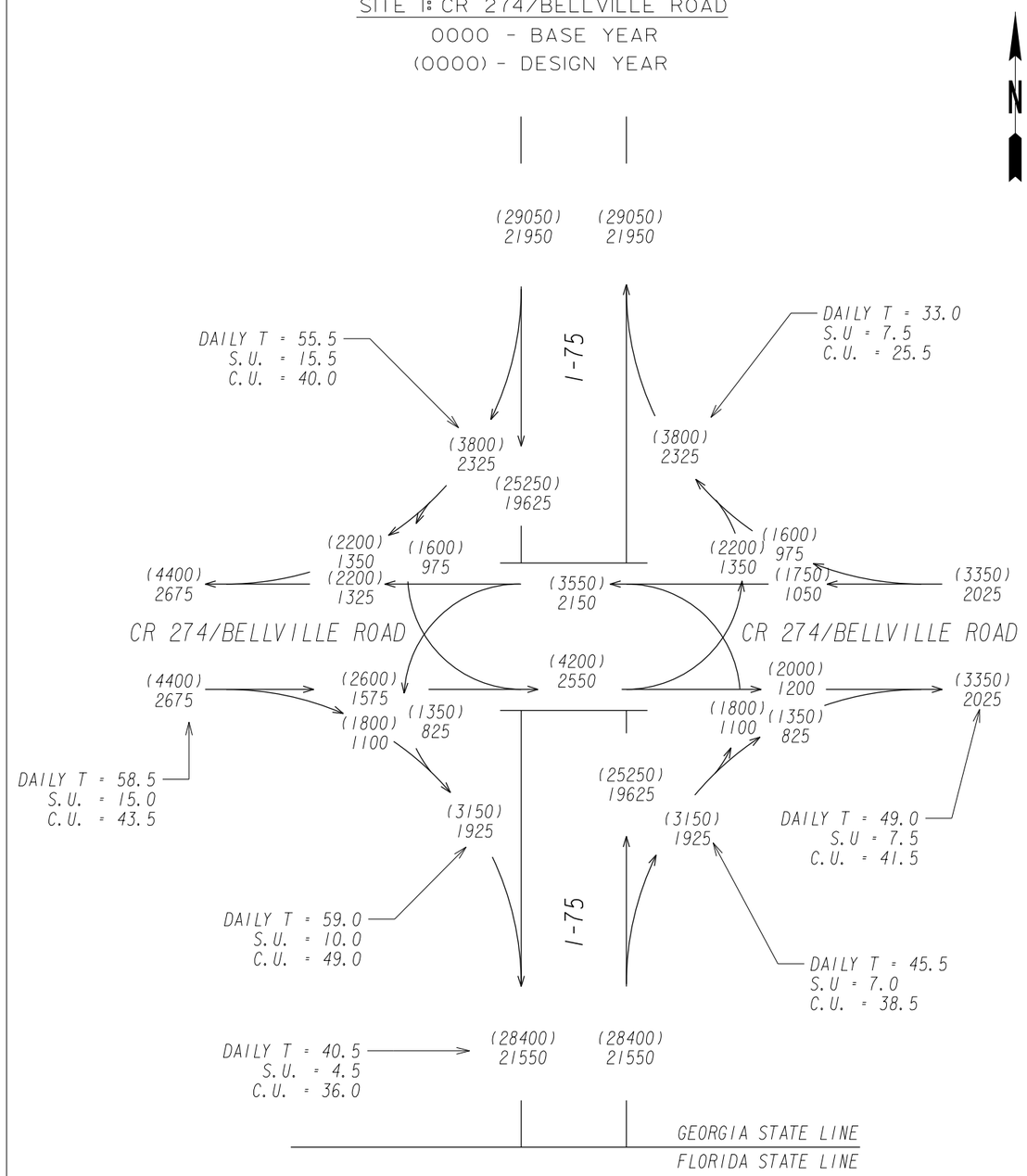

P.I. NO. 0007386
LOWNDES COUNTY

JACOBS

SCALE: N.T.S.

REVISION DATES		

STATE OF GEORGIA
DEPARTMENT OF TRANSPORTATION

NOVEMBER 2016

TRAFFIC DIAGRAM

DIAGRAM 4: (2042)2022 AND (2044)2024 AADT VOLUMES
(NO BUILD)

DRAWING No.
10-004

COUNTY	PROJECT NUMBER	SHEET NO.	TOTAL SHEETS
LOWNDES	NHS-007-00(386)	2	4

2022 DHV

SITE 1: CR 274/BELLVILLE ROAD

0000 - AM PEAK HOUR

(0000) - PM PEAK HOUR

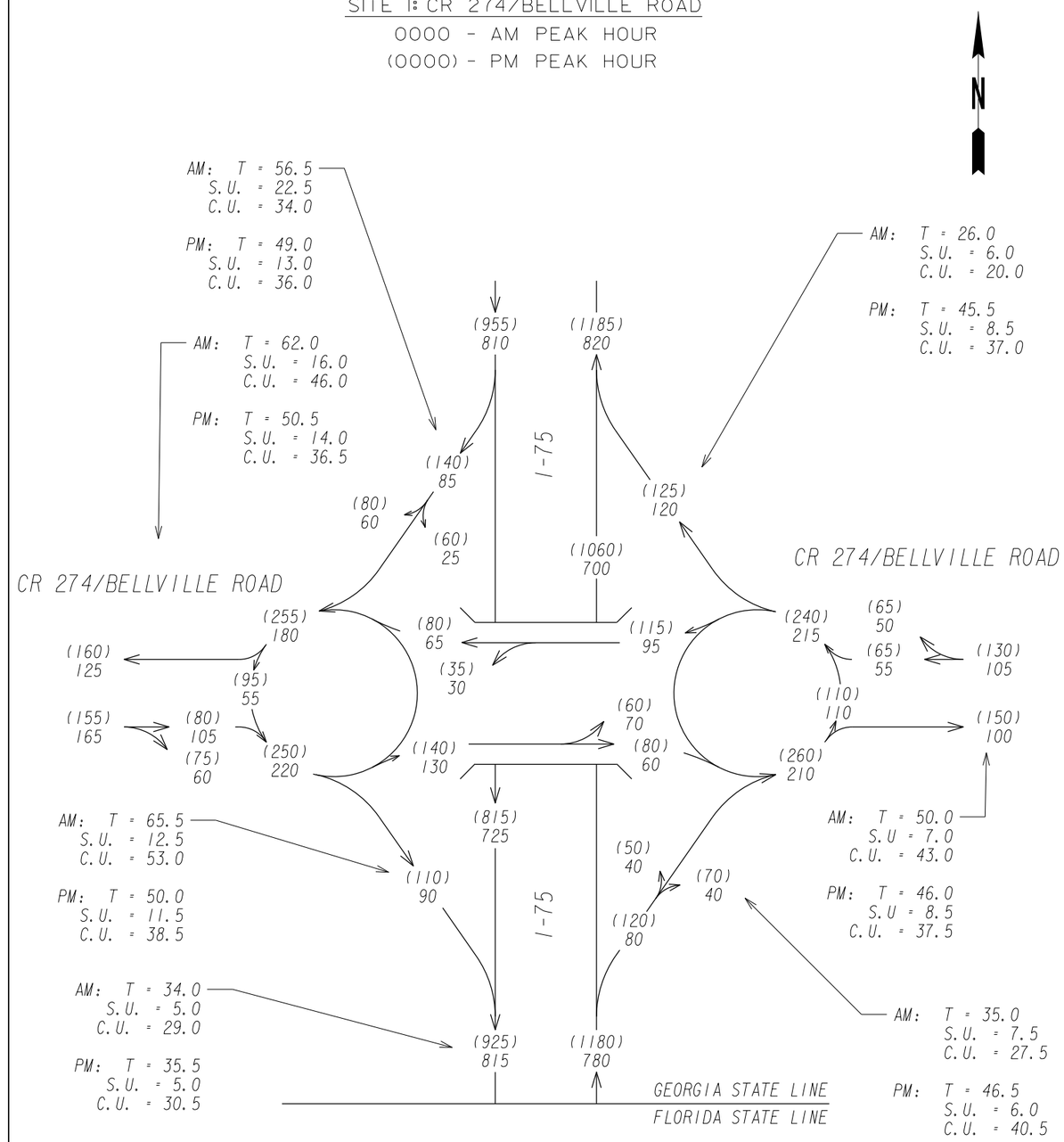

2042 DHV

SITE 1: CR 274/BELLVILLE ROAD

0000 - AM PEAK HOUR

(0000) - PM PEAK HOUR

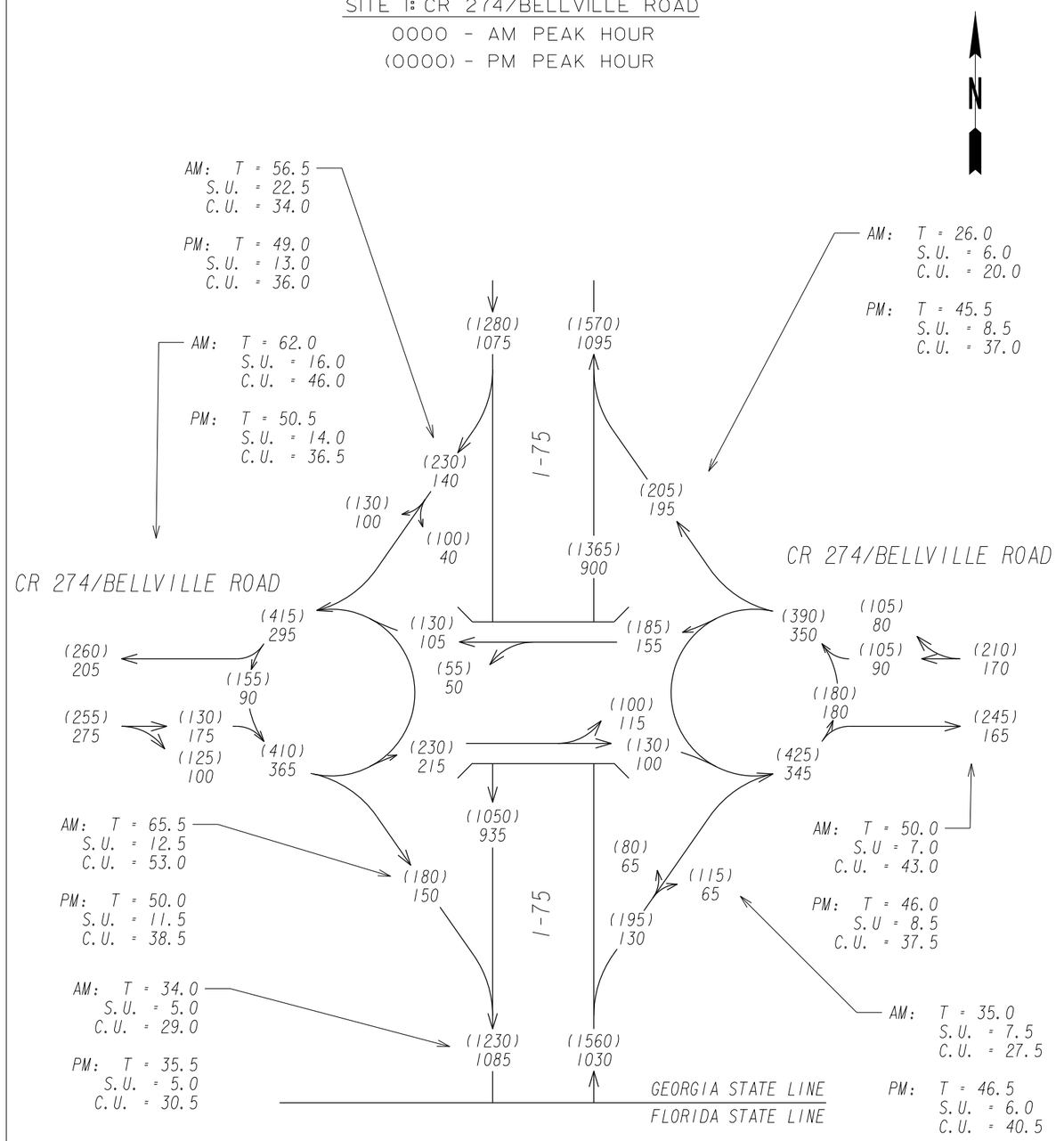

P. I. NO. 0007386
LOWNDES COUNTY

JACOBS

SCALE: N.T.S.

REVISION DATES		

STATE OF GEORGIA
DEPARTMENT OF TRANSPORTATION

NOVEMBER 2016

TRAFFIC DIAGRAM

DIAGRAM 2: 2022 AND 2042 DHV VOLUMES (BUILD)

DRAWING No. 10-005

COUNTY	PROJECT NUMBER	SHEET NO.	TOTAL SHEETS
LOWNDES	NHS-007-00(386)	3	4

2024 DHV

SITE 1: CR 274/BELLVILLE ROAD

0000 - AM PEAK HOUR

(0000) - PM PEAK HOUR

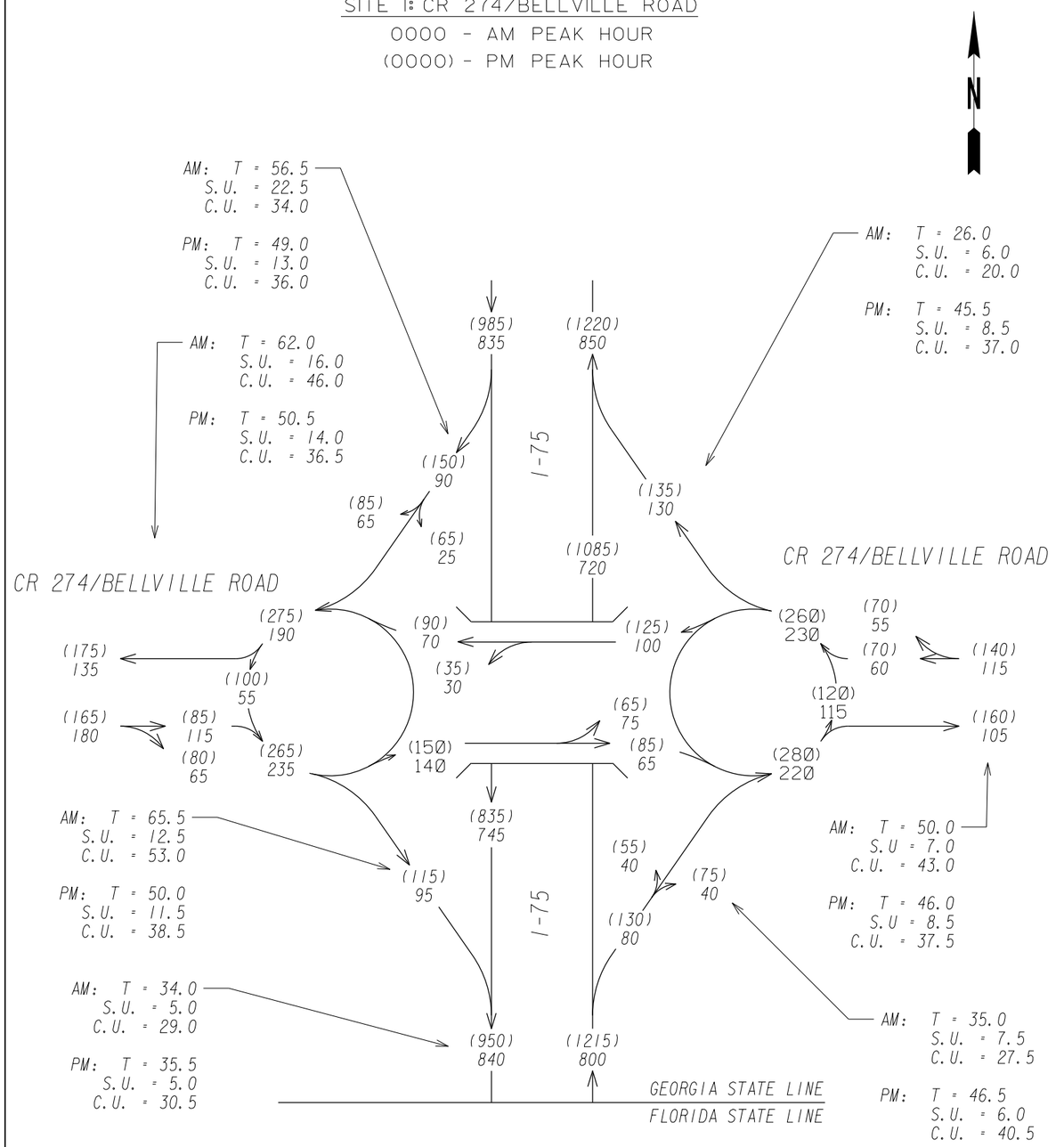

2044 DHV

SITE 1: CR 274/BELLVILLE ROAD

0000 - AM PEAK HOUR

(0000) - PM PEAK HOUR

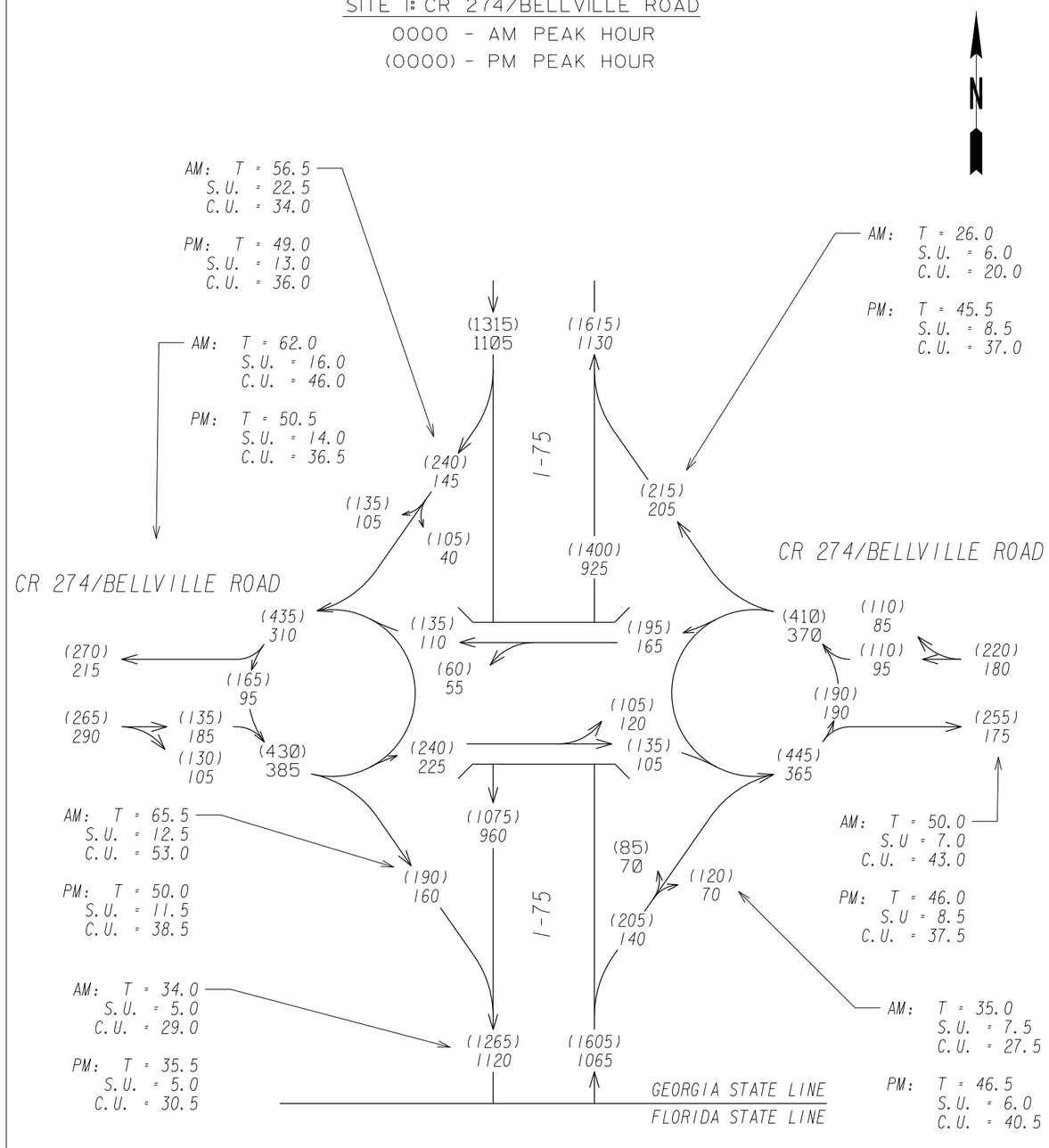

P.I. NO. 0007386
LOWNDES COUNTY

JACOBS

SCALE: N.T.S.

REVISION DATES		

STATE OF GEORGIA
DEPARTMENT OF TRANSPORTATION

NOVEMBER 2016

TRAFFIC DIAGRAM

DIAGRAM 3: 2024 AND 2044 DHV VOLUMES (BUILD)

DRAWING No. 10-006

COUNTY	PROJECT NUMBER	SHEET NO.	TOTAL SHEETS
LOWNDES	NHS-007-00(386)	4	4

DESIGN (2042) AND BASE 2022 AADT
SITE 1: CR 274/BELLVILLE ROAD

0000 - BASE YEAR
(0000) - DESIGN YEAR

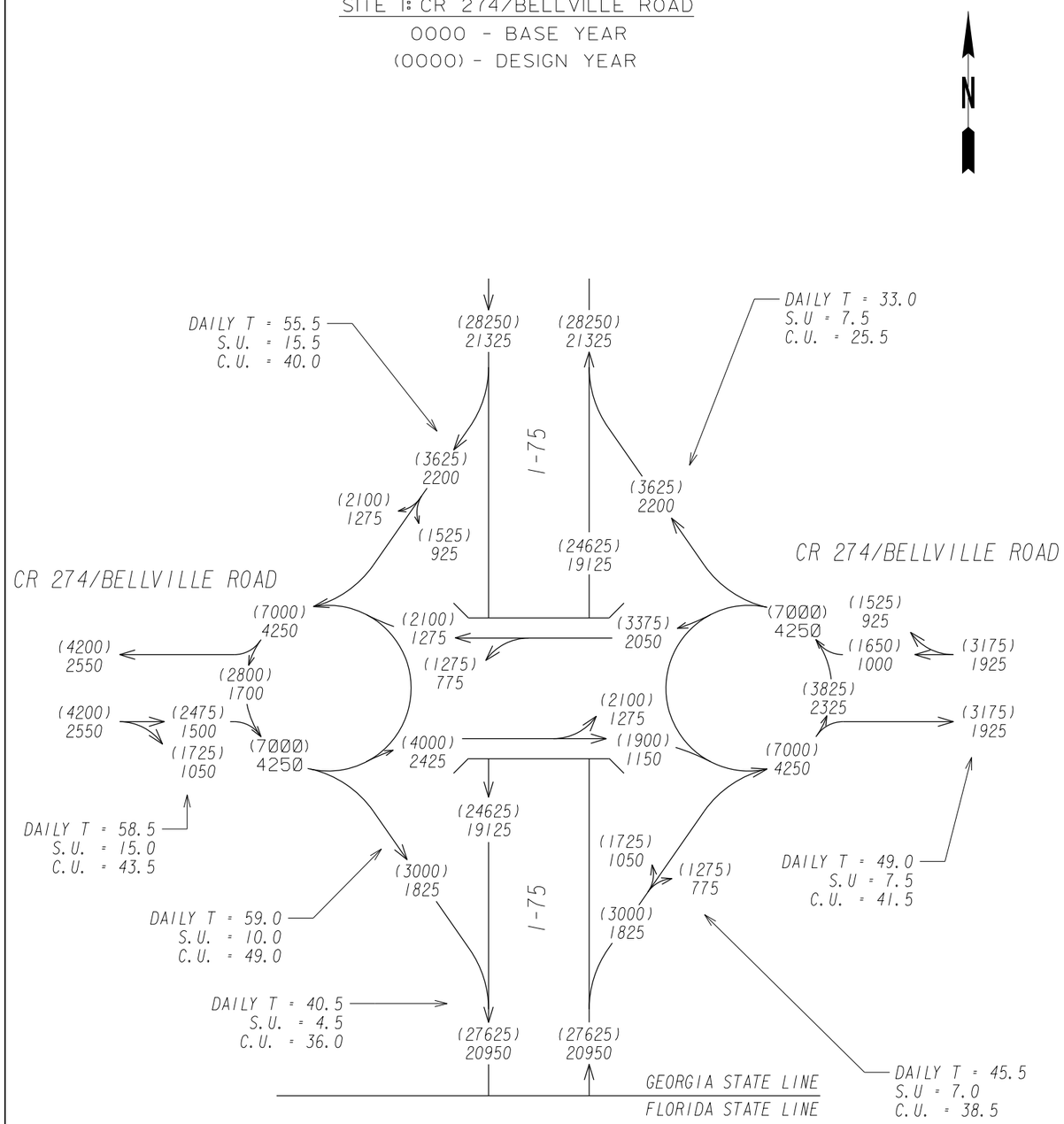

DESIGN (2044) AND BASE 2024 AADT
SITE 1: CR 274/BELLVILLE ROAD

0000 - BASE YEAR
(0000) - DESIGN YEAR

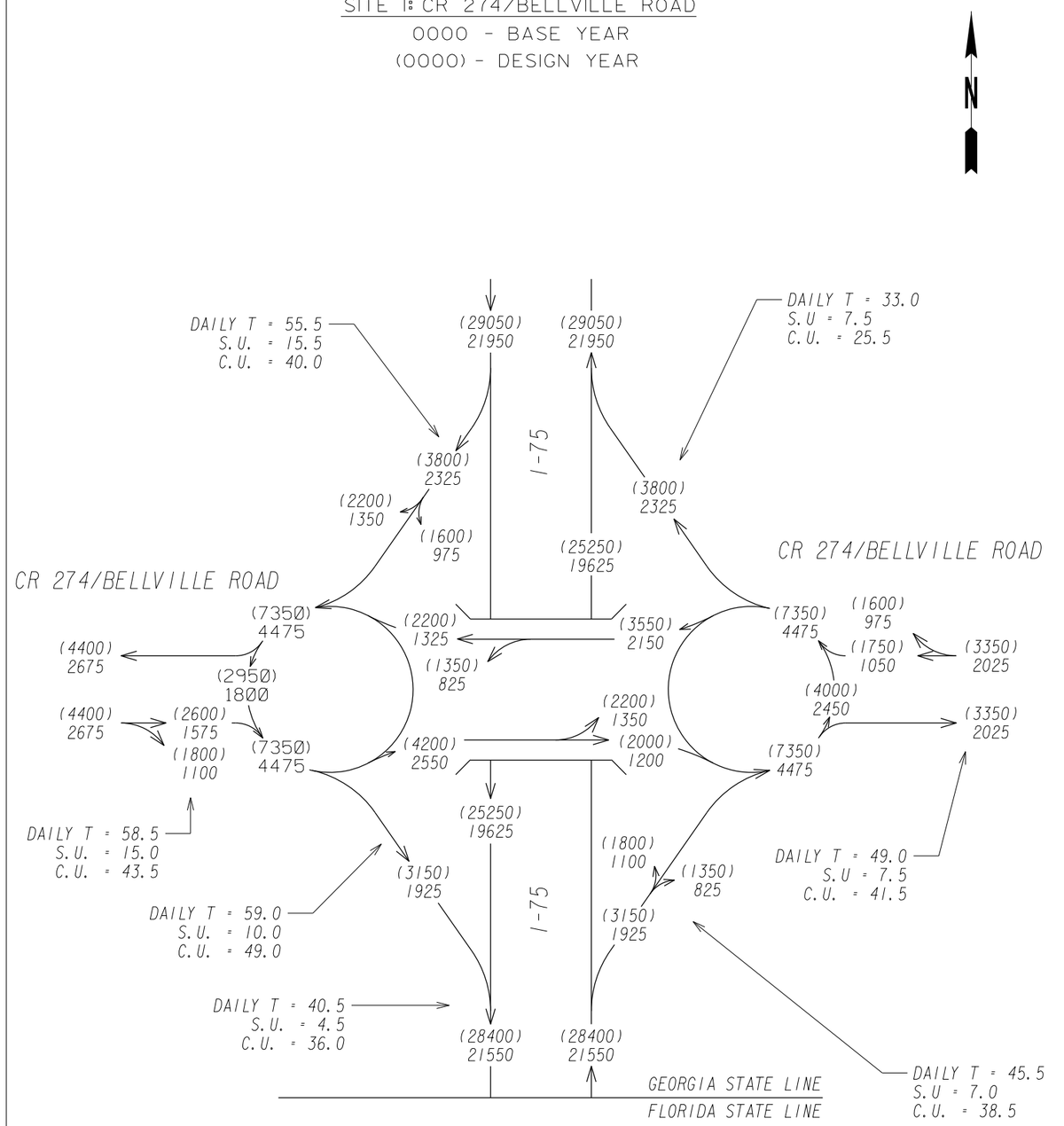

P.I. NO. 0007386
LOWNDES COUNTY

JACOBS

SCALE: N.T.S.

REVISION DATES		

STATE OF GEORGIA
DEPARTMENT OF TRANSPORTATION

NOVEMBER 2016

TRAFFIC DIAGRAM

DIAGRAM 4: (2042)2022 AND (2044)2024 AADT VOLUMES
(BUILD)

DRAWING No.
10-007

CR 274 (Bellville Road) at I-75 NB Ramps

GDOT

Signal Warrant Analysis

November 29, 2016

PI 0007386

CR 274 (Bellville Road) at I-75 NB Ramps

Project No:	CB-506050
Document Title:	Signal Warrant Analysis
Document No.:	1
Revision:	-
Date:	November 29, 2016
Client Name:	GDOT
Client No:	PI 0007386
Project Manager:	Derrick Vincent, PE
Author:	Geoff K. Warr, PE, PTOE
File Name:	\\ATLFIL22\Projects\CB-506050 Lowndes Co\600 DISCIPLINE FILES\610 Studies & Reports\Traffic (AAD)\2016 Update\Reports\6. Signal Warrant Analysis_WIP\2_Bellville NB Ramps\Doc\CB-056050 Bellville Rd NB Ramps - SWA 11-28-16.docx

Jacobs Engineering Inc.

Ten 10th Street, NW, Suite 1400
Atlanta, Georgia 30309
United States
T +1.404.978.7600
F +1.404.978.7660
www.jacobs.com

© Copyright 2016 Jacobs Engineering Inc. The concepts and information contained in this document are the property of Jacobs. Use or copying of this document in whole or in part without the written permission of Jacobs constitutes an infringement of copyright.

Limitation: This report has been prepared on behalf of, and for the exclusive use of Jacobs' Client, and is subject to, and issued in accordance with, the provisions of the contract between Jacobs and the Client. Jacobs accepts no liability or responsibility whatsoever for, or in respect of, any use of, or reliance upon, this report by any third party.

Contents

STUDY LOCATION 1
COUNTY 1
REQUESTED BY 1
REASON FOR INVESTIGATION 1
EXISTING LANE GEOMETRY 1
EXISTING TRAFFIC CONTROL 1
VEHICULAR VOLUMES 2
VEHICULAR SPEEDS 4
PEDESTRIAN ACTIVITY 4
PARKING 4
ADJACENT SIGNALIZED INTERSECTIONS 4
SIGHT DISTANCE 4
FUTURE BUILD CONDITIONS 5
CAPACITY ANALYSIS 6
WARRANT ANALYSIS 7
FUTURE DELAY ANALYSIS 8
ROUNDABOUT FEASIBILITY 9
CONCLUSIONS AND RECOMMENDATIONS 10

Tables

Table 1 : Base 2022 Traffic Volumes (I-75 Northbound Ramps at Bellville Road) 3
Table 2 : Design 2042 Traffic Volumes (I-75 Northbound Ramps at Bellville Road) 4
Table 3 : Existing Intersection Delay 6
Table 4 : Base 2022 (I-75 Northbound Ramps at Bellville Road) - Adjusted for Heavy Vehicles 7
Table 5 : Base 2042 (I-75 Northbound Ramps at Bellville Road) - Adjusted for Heavy Vehicles 8
Table 6 : Signal Warrant Analysis Results 8
Table 7 : Future Intersection Delay (Signalized) 9
Table 8 : Future Intersection Delay (Roundabout) 9

STUDY LOCATION

The study intersection is CR 274 (Bellville Road) at the I-75 Northbound Ramps, located in Lowndes County, GA. The study intersection is approximately 1.5 miles north of where I-75 crosses the Georgia / Florida state line. A location map is included in the Appendix A.

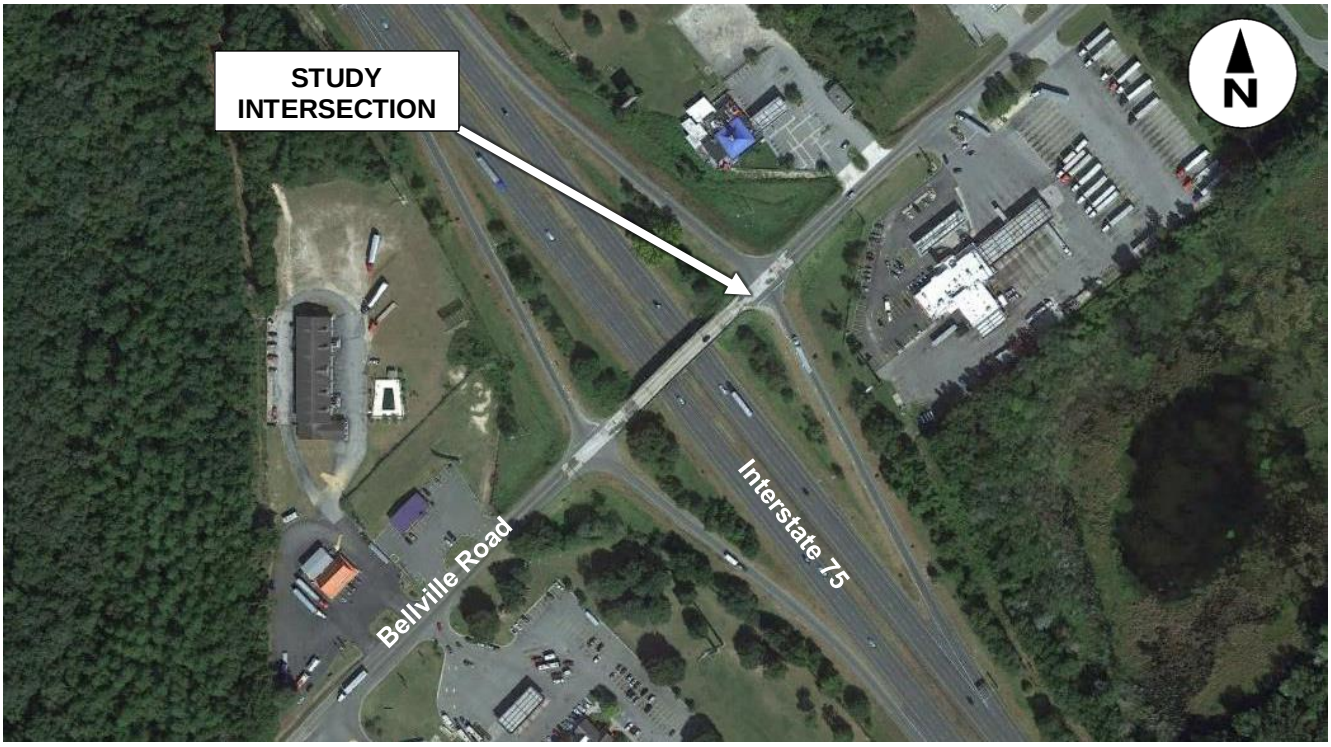

Figure 1 : Aerial of Study Intersection

COUNTY

The intersection is located in Lowndes County.

REQUESTED BY

GDOT has requested this traffic engineering study.

REASON FOR INVESTIGATION

The purpose of this study is to perform an MUTCD Signal Warrant Analysis for the intersection of CR 274 (Bellville Road) at the I-75 Southbound Ramps with the projected volumes after reconfiguration of the interchange ramps.

EXISTING LANE GEOMETRY

CR 274 (Bellville Road) is an east-west, two-lane, undivided roadway. The I-75 Northbound Off-Ramp has a single stop-controlled lane to serve left and right turning movements.

EXISTING TRAFFIC CONTROL

The study intersection is currently free-flow for CR 274 (Bellville Road) with a stop sign on the I-75 Northbound Off-Ramp.

VEHICULAR VOLUMES

Traffic counts on I-75 and CR 274 (Bellville Road) show a daily traffic volume of 1,576 vehicles per day on the I-75 Northbound Off-Ramp; 3,625 vehicles per day on Bellville Road (east of the interchange); and 4,570 vehicles per day on Bellville Road (west of the northbound ramps).

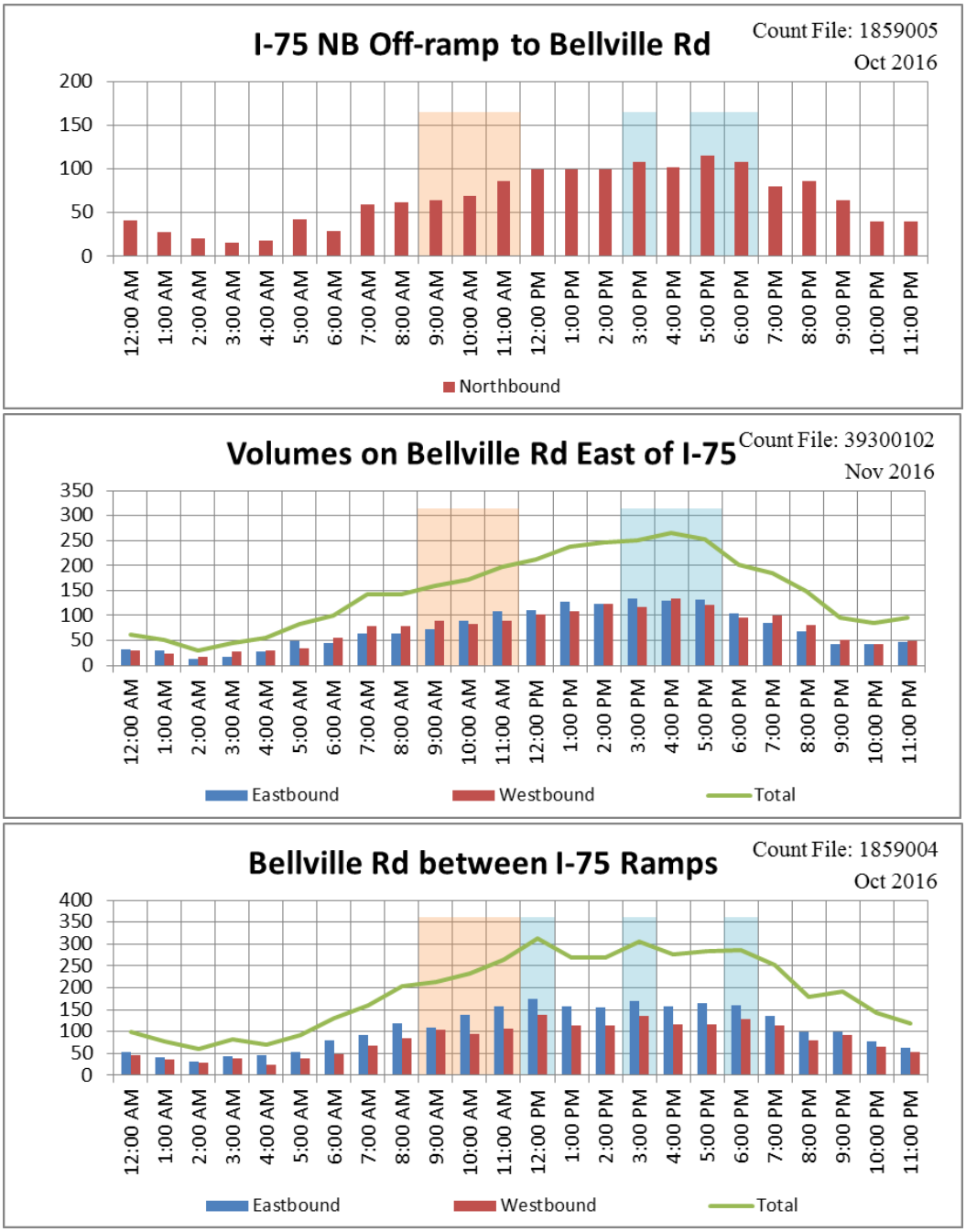

Figure 2 : Hourly Volume for Study Approaches

Twenty-Four hour turning movement volumes were derived from the Base and Design (2022 and 2042) daily turning movement diagrams (Appendix D) and the hourly distributions from the approach counts (Figure 2). The

resulting volumes are shown in Table 1 for the year 2022 and Table 2 for the year 2042. Results were rounded to the nearest five vehicles per hour for each hourly volume.

Table 1 : Base 2022 Traffic Volumes (I-75 Northbound Ramps at Bellville Road)

Approach	NORTHBOUND I-75 NB Off-Ramp			SOUTHBOUND NA			EASTBOUND Bellville Road			WESTBOUND Bellville Road		
Time / Movement	L	T	R	L	T	R	L	T	R	L	T	R
Midnight - 1:00 a.m.	25	0	20	-	-	-	25	25	-	-	15	15
1:00 a.m. - 2:00 a.m.	20	0	15	-	-	-	20	20	-	-	15	10
2:00 a.m. - 3:00 a.m.	15	0	10	-	-	-	15	15	-	-	10	10
3:00 a.m. - 4:00 a.m.	10	0	10	-	-	-	20	20	-	-	15	15
4:00 a.m. - 5:00 a.m.	10	0	10	-	-	-	25	20	-	-	15	15
5:00 a.m. - 6:00 a.m.	30	0	20	-	-	-	25	25	-	-	20	20
6:00 a.m. - 7:00 a.m.	20	0	15	-	-	-	40	35	-	-	30	30
7:00 a.m. - 8:00 a.m.	40	0	30	-	-	-	45	40	-	-	45	40
8:00 a.m. - 9:00 a.m.	40	0	30	-	-	-	60	55	-	-	45	40
9:00 a.m. - 10:00 a.m.	45	0	30	-	-	-	55	50	-	-	50	45
10:00 a.m. - 11:00 a.m.	45	0	35	-	-	-	70	60	-	-	45	45
11:00 a.m. - Noon	60	0	45	-	-	-	80	70	-	-	50	45
Noon - 1:00 p.m.	65	0	50	-	-	-	85	80	-	-	60	55
1:00 p.m. - 2:00 p.m.	65	0	50	-	-	-	80	70	-	-	60	55
2:00 p.m. - 3:00 p.m.	65	0	50	-	-	-	75	70	-	-	70	65
3:00 p.m. - 4:00 p.m.	70	0	55	-	-	-	85	75	-	-	65	60
4:00 p.m. - 5:00 p.m.	65	0	50	-	-	-	80	70	-	-	75	70
5:00 p.m. - 6:00 p.m.	75	0	55	-	-	-	80	75	-	-	70	65
6:00 p.m. - 7:00 p.m.	70	0	55	-	-	-	80	70	-	-	55	50
7:00 p.m. - 8:00 p.m.	55	0	40	-	-	-	70	60	-	-	55	55
8:00 p.m. - 9:00 p.m.	60	0	45	-	-	-	50	45	-	-	45	45
9:00 p.m. - 10:00 p.m.	45	0	30	-	-	-	50	45	-	-	30	30
10:00 p.m. - 11:00 p.m.	25	0	20	-	-	-	40	35	-	-	25	20
11:00 p.m. - Midnight	25	0	20	-	-	-	30	30	-	-	25	25

Table 2 : Design 2042 Traffic Volumes (I-75 Northbound Ramps at Bellville Road)

Approach	NORTHBOUND I-75 NB Off-Ramp			SOUTHBOUND NA			EASTBOUND Bellville Road			WESTBOUND Bellville Road		
Time / Movement	L	T	R	L	T	R	L	T	R	L	T	R
Midnight - 1:00 a.m.	45	0	35	-	-	-	45	40	-	-	30	25
1:00 a.m. - 2:00 a.m.	30	0	20	-	-	-	35	30	-	-	20	20
2:00 a.m. - 3:00 a.m.	20	0	15	-	-	-	25	25	-	-	15	15
3:00 a.m. - 4:00 a.m.	15	0	15	-	-	-	35	30	-	-	25	25
4:00 a.m. - 5:00 a.m.	20	0	15	-	-	-	40	35	-	-	25	25
5:00 a.m. - 6:00 a.m.	45	0	35	-	-	-	45	40	-	-	30	30
6:00 a.m. - 7:00 a.m.	30	0	25	-	-	-	65	60	-	-	50	45
7:00 a.m. - 8:00 a.m.	65	0	50	-	-	-	75	70	-	-	75	65
8:00 a.m. - 9:00 a.m.	65	0	50	-	-	-	95	85	-	-	75	70
9:00 a.m. - 10:00 a.m.	70	0	50	-	-	-	90	80	-	-	85	75
10:00 a.m. - 11:00 a.m.	75	0	55	-	-	-	110	100	-	-	80	70
11:00 a.m. - Noon	95	0	70	-	-	-	130	115	-	-	85	80
Noon - 1:00 p.m.	110	0	80	-	-	-	145	130	-	-	95	90
1:00 p.m. - 2:00 p.m.	110	0	80	-	-	-	130	115	-	-	100	95
2:00 p.m. - 3:00 p.m.	110	0	80	-	-	-	125	115	-	-	115	105
3:00 p.m. - 4:00 p.m.	115	0	85	-	-	-	140	125	-	-	110	100
4:00 p.m. - 5:00 p.m.	110	0	80	-	-	-	130	120	-	-	125	115
5:00 p.m. - 6:00 p.m.	125	0	95	-	-	-	135	120	-	-	115	105
6:00 p.m. - 7:00 p.m.	120	0	90	-	-	-	130	120	-	-	90	85
7:00 p.m. - 8:00 p.m.	90	0	65	-	-	-	110	100	-	-	95	85
8:00 p.m. - 9:00 p.m.	95	0	70	-	-	-	80	70	-	-	75	70
9:00 p.m. - 10:00 p.m.	70	0	50	-	-	-	80	70	-	-	50	45
10:00 p.m. - 11:00 p.m.	45	0	35	-	-	-	65	55	-	-	40	35
11:00 p.m. - Midnight	45	0	30	-	-	-	55	50	-	-	45	40

VEHICULAR SPEEDS

Bellville Road is a northeast-southwest, two-lane, undivided roadway with a speed limit of 45 mph and an advisory speed of 35 mph on the bridge over I-75. Bellville Road is classified as a "Rural Major Collector" by GDOT. A ramp speed of 50 mph was used in modeling the I-75 Northbound Ramps.

PEDESTRIAN ACTIVITY

Bellville Road currently lacks pedestrian crossing and sidewalks in the vicinity of the I-75 interchange.

PARKING

No parking is allowed in the vicinity of the study intersection.

ADJACENT SIGNALIZED INTERSECTIONS

There are presently no signalized intersections within a one mile radius of the study intersection.

SIGHT DISTANCE

The AASHTO stopping sight distance requirement is 360 feet along a 45 mph roadway. The AASHTO sight distance requirement for a stop controlled left turn onto a 45 mph roadway (while crossing one lane of traffic) is 500 feet. The existing bridge is constructed on vertical alignment that does not provide the necessary stopping sight distance for the proposed 45 mph design speed. The narrow shoulders further limit the intersection sight distances at the ramp terminals for exiting traffic from both directions.

Figure 3 : Looking Left from I-75 Northbound Off-Ramp

Figure 4 : Looking Left from I-75 Southbound Off-Ramp

FUTURE BUILD CONDITIONS

As part of the I-75 widening project in Lowndes County, GDOT is planning improvements along CR 274/Lake Park-Bellville Road in order to accommodate the widened I-75 cross section. As part of these improvements, a new bridge is planned. The new bridge will be longer to accommodate future widening of I-75, and will be wider to provide a three-lane facility with a center turn lane for left-turn bay storage. Due to the anticipated amount of traffic at the relocated ramp intersections, GDOT is considering placement of a traffic signal at the I-75 Northbound Ramps.

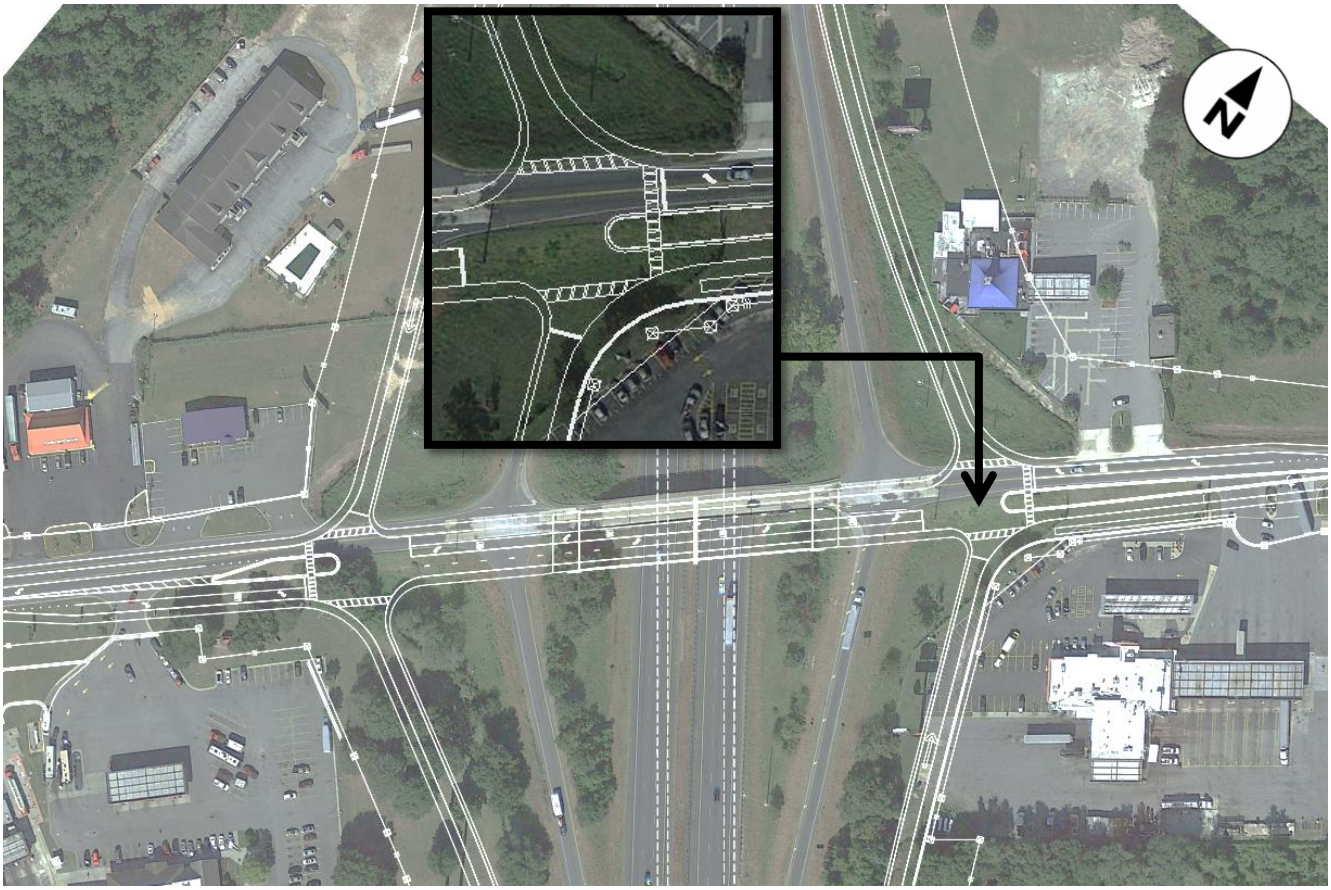

Figure 5 : Build Concept for I-75 Interchange

CAPACITY ANALYSIS

Intersection delay was calculated using the AM and PM peak hour volumes from Appendix D and Synchro software. Results of the existing capacity analysis are shown below in Table 3.

Table 3 : Unsignalized Intersection Delay

Bellville Road at the I-75 Northbound Ramps		No-Build				Build (Unsignalized)			
		AM Peak Hour		PM Peak Hour		AM Peak Hour		PM Peak Hour	
		LOS	Delay	LOS	Delay	LOS	Delay	LOS	Delay
2016	Northbound Approach (I-75 Northbound Ramp)	B	10.6	B	11.0	-	-	-	-
	Eastbound Left (Bellville Road)	A	8.3	A	8.1	-	-	-	-
2022	Northbound Approach (I-75 Northbound Ramp)	B	11.2	B	11.6	B	10.9	B	11.3
	Eastbound Left (Bellville Road)	A	8.4	A	8.2	A	8.2	A	8.0
2042	Northbound Approach (I-75 Northbound Ramp)	B	14.9	C	16.4	B	14.0	C	15.3
	Eastbound Left (Bellville Road)	A	9.0	A	8.6	A	8.5	A	8.2

The result of the intersection capacity analysis indicates that all movements are operating at an acceptable level-of-service in both the AM and PM peak hours.

WARRANT ANALYSIS

The posted speed limit on CR 274 (Bellville Road) is 45 mph. A signal warrant analysis was performed using a main street approach speed of 45 mph with the intersection geometry of a single-lane main street approach and a single-lane side street approach. Since no dedicated turn bays were planned for the I-75 Northbound Off-Ramp, left and right turn vehicles to queue together; hence, no right turn reductions were applied to the Northbound approach.

The unusually high percentage of heavy vehicles may have an impact on the accuracy of the warrant check conclusion. NCHRP Report 457 (Transportation Research Board, 2001) recommends that, if the heavy vehicle percentage exceeds 5%, the effect of heavy vehicles should be fully evaluated during the engineering study. The Signalized Intersections Informational Guide (FHWA-SA-13-027, 2013) states that, in some cases, larger vehicles can be converted into Passenger Car Equivalents (PCEs) to account for their additional impacts on the system.

To include allowances for the relatively large gap times that drivers of such vehicles need to cross or enter the major traffic stream safely, a separate scenario was evaluated by adjusting truck traffic to passenger car equivalents. The Highway Capacity Manual PCE of 2.0 (HCM 2010, Exhibit 21-10) has been used to develop the adjusted intersection volumes in Table 4 for the year 2022 and Table 5 for the year 2042.

Table 4 : Base 2022 (I-75 Southbound Ramps at Bellville Road) - Adjusted for Heavy Vehicles

Approach	NORTHBOUND NA			SOUTHBOUND I-75 SB Off-Ramp			EASTBOUND Bellville Road			WESTBOUND Bellville Road		
Heavy Vehicle %	45.5%			NA			49.0%			58.5%		
Adjustment Factor	1.455			NA			1.490			1.585		
Time / Movement	L	T	R	L	T	R	L	T	R	L	T	R
Midnight - 1:00 a.m.	35	0	30	-	-	-	35	35	-	-	25	25
1:00 a.m. - 2:00 a.m.	30	0	20	-	-	-	30	30	-	-	25	15
2:00 a.m. - 3:00 a.m.	20	0	15	-	-	-	20	20	-	-	15	15
3:00 a.m. - 4:00 a.m.	15	0	15	-	-	-	30	30	-	-	25	25
4:00 a.m. - 5:00 a.m.	15	0	15	-	-	-	35	30	-	-	25	25
5:00 a.m. - 6:00 a.m.	45	0	30	-	-	-	35	35	-	-	30	30
6:00 a.m. - 7:00 a.m.	30	0	20	-	-	-	60	50	-	-	50	50
7:00 a.m. - 8:00 a.m.	60	0	45	-	-	-	65	60	-	-	70	65
8:00 a.m. - 9:00 a.m.	60	0	45	-	-	-	90	80	-	-	70	65
9:00 a.m. - 10:00 a.m.	65	0	45	-	-	-	80	75	-	-	80	70
10:00 a.m. - 11:00 a.m.	65	0	50	-	-	-	105	90	-	-	70	70
11:00 a.m. - Noon	85	0	65	-	-	-	120	105	-	-	80	70
Noon - 1:00 p.m.	95	0	75	-	-	-	125	120	-	-	95	85
1:00 p.m. - 2:00 p.m.	95	0	75	-	-	-	120	105	-	-	95	85
2:00 p.m. - 3:00 p.m.	95	0	75	-	-	-	110	105	-	-	110	105
3:00 p.m. - 4:00 p.m.	100	0	80	-	-	-	125	110	-	-	105	95
4:00 p.m. - 5:00 p.m.	95	0	75	-	-	-	120	105	-	-	120	110
5:00 p.m. - 6:00 p.m.	110	0	80	-	-	-	120	110	-	-	110	105
6:00 p.m. - 7:00 p.m.	100	0	80	-	-	-	120	105	-	-	85	80
7:00 p.m. - 8:00 p.m.	80	0	60	-	-	-	105	90	-	-	85	85
8:00 p.m. - 9:00 p.m.	85	0	65	-	-	-	75	65	-	-	70	70
9:00 p.m. - 10:00 p.m.	65	0	45	-	-	-	75	65	-	-	50	50
10:00 p.m. - 11:00 p.m.	35	0	30	-	-	-	60	50	-	-	40	30
11:00 p.m. - Midnight	35	0	30	-	-	-	45	45	-	-	40	40

Table 5 : Base 2042 (I-75 Southbound Ramps at Bellville Road) - Adjusted for Heavy Vehicles

Approach	NORTHBOUND NA			SOUTHBOUND I-75 SB Off-Ramp			EASTBOUND Bellville Road			WESTBOUND Bellville Road		
Heavy Vehicle %	45.5%			NA			49.0%			58.5%		
Adjustment Factor	1.455			NA			1.490			1.585		
Time / Movement	L	T	R	L	T	R	L	T	R	L	T	R
Midnight - 1:00 a.m.	65	0	50	-	-	-	65	60	-	-	50	40
1:00 a.m. - 2:00 a.m.	45	0	30	-	-	-	50	45	-	-	30	30
2:00 a.m. - 3:00 a.m.	30	0	20	-	-	-	35	35	-	-	25	25
3:00 a.m. - 4:00 a.m.	20	0	20	-	-	-	50	45	-	-	40	40
4:00 a.m. - 5:00 a.m.	30	0	20	-	-	-	60	50	-	-	40	40
5:00 a.m. - 6:00 a.m.	65	0	50	-	-	-	65	60	-	-	50	50
6:00 a.m. - 7:00 a.m.	45	0	35	-	-	-	95	90	-	-	80	70
7:00 a.m. - 8:00 a.m.	95	0	75	-	-	-	110	105	-	-	120	105
8:00 a.m. - 9:00 a.m.	95	0	75	-	-	-	140	125	-	-	120	110
9:00 a.m. - 10:00 a.m.	100	0	75	-	-	-	135	120	-	-	135	120
10:00 a.m. - 11:00 a.m.	110	0	80	-	-	-	165	150	-	-	125	110
11:00 a.m. - Noon	140	0	100	-	-	-	195	170	-	-	135	125
Noon - 1:00 p.m.	160	0	115	-	-	-	215	195	-	-	150	145
1:00 p.m. - 2:00 p.m.	160	0	115	-	-	-	195	170	-	-	160	150
2:00 p.m. - 3:00 p.m.	160	0	115	-	-	-	185	170	-	-	180	165
3:00 p.m. - 4:00 p.m.	165	0	125	-	-	-	210	185	-	-	175	160
4:00 p.m. - 5:00 p.m.	160	0	115	-	-	-	195	180	-	-	200	180
5:00 p.m. - 6:00 p.m.	180	0	140	-	-	-	200	180	-	-	180	165
6:00 p.m. - 7:00 p.m.	175	0	130	-	-	-	195	180	-	-	145	135
7:00 p.m. - 8:00 p.m.	130	0	95	-	-	-	165	150	-	-	150	135
8:00 p.m. - 9:00 p.m.	140	0	100	-	-	-	120	105	-	-	120	110
9:00 p.m. - 10:00 p.m.	100	0	75	-	-	-	120	105	-	-	80	70
10:00 p.m. - 11:00 p.m.	65	0	50	-	-	-	95	80	-	-	65	55
11:00 p.m. - Midnight	65	0	45	-	-	-	80	75	-	-	70	65

The results of the signal warrant analysis for future condition indicated that the 2042 traffic volumes meet one or more of the MUTCD warrants (100% Thresholds). Detailed copies of the signal warrant analyses are included in Appendix E and Appendix F.

Table 6 : Signal Warrant Analysis Results

Scenario	Warrant 1	Warrant 2	Warrant 3	Warrant 4-9
Build 2022 (Table 1)	NOT SATISFIED	NOT SATISFIED	NOT SATISFIED	NOT EVALUATED
Build 2042 (Table 2)	NOT SATISFIED	NOT SATISFIED	NOT SATISFIED	NOT EVALUATED
Build 2022– Adjusted for Heavy Vehicles (Table 4)	NOT SATISFIED	NOT SATISFIED	NOT SATISFIED	NOT EVALUATED
Build 2042– Adjusted for Heavy Vehicles (Table 5)	SATISFIED	SATISFIED	SATISFIED	NOT EVALUATED

FUTURE DELAY ANALYSIS

A future capacity analysis was performed at the intersection of CR 274 (Bellville Road) at the I-75 Northbound Ramps. The methodology used for evaluating traffic operations at the intersection is based on the criteria set forth in the Transportation Research Board's Highway Capacity Manual (HCM 2010). Synchro Software, which emulates the HCM methodology, was used for conducting the analysis. The future intersection capacity analysis is shown in Table 7 for the unsignalized and signalized conditions.

Table 7 : Future Intersection Delay (Signalized)

Bellville Road at the I-75 Northbound Ramps		Build (Unsignalized)				Build (Signalized)			
		AM Peak Hour		PM Peak Hour		AM Peak Hour		PM Peak Hour	
		LOS	Delay	LOS	Delay	LOS	Delay	LOS	Delay
2022	OVERALL	-	-	-	-	A	6.7	A	7.9
	Northbound Approach (I-75 Northbound Ramp)	B	10.6	B	11.0	A	9.2	B	10.3
	Eastbound Left (Bellville Road)	A	8.3	A	8.1	A	6.7	A	7.0
2042	OVERALL	-	-	-	-	A	7.7	B	10.3
	Northbound Approach (I-75 Northbound Ramp)	B	11.2	B	11.6	B	14.5	B	14.3
	Eastbound Left (Bellville Road)	A	8.4	A	8.2	A	7.1	A	9.2

As shown in Table 7, after the installation of a traffic signal, the intersection will operate at LOS A in the AM and LOS A or B in the PM peak hours.

ROUNDABOUT FEASIBILITY

Based on the traffic volumes on CR 274 (Bellville Road) and at the I-75 Northbound Ramps, the GDOT roundabout analysis is required since CR 274 (Bellville Road) carries less than 90% of the daily traffic through the intersection. The results of the future volumes revealed that that CR 274 (Bellville Road) approaches will carry 68% of the total daily traffic at the study intersection. The roundabout analysis was prepared using the GDOT Roundabout Analysis Tool (v3.0). Detailed results of the analysis are included in the Appendix.

Table 8 : Future Intersection Delay (Roundabout)

Bellville Road at the I-75 Northbound Ramps		Build (Roundabout)			
		AM Peak Hour		PM Peak Hour	
		LOS	Delay	LOS	Delay
2022	Northbound Approach (I-75 Northbound Ramp)	A	6	A	7
	Westbound Approach (Bellville Road)	A	7	A	7
	Eastbound Approach (Bellville Road)	A	6	A	5
2042	Northbound Approach (I-75 Northbound Ramp)	A	7	B	11
	Westbound Approach (Bellville Road)	B	11	A	9
	Eastbound Approach (Bellville Road)	A	7	A	7

Results of the roundabout analysis indicate that a single-lane roundabout would operate at an acceptable level-of-service; however, heavy vehicle usage and right-of-way constraints would need to be taken into account before further consideration is given to its implementation.

CONCLUSIONS AND RECOMMENDATIONS

The results of the signal warrant analysis indicate that the 2042 traffic volumes for the intersection of CR 274 (Bellville Road) at the I-75 Northbound Ramps will not meet MUTCD Warrants for the 100% standard. If volumes are adjusted to account for the relatively large gap times that heavy vehicles need to cross or enter the major traffic stream safely, then MUTCD Warrants 1, 2, and 3 are met for the 2042 traffic volumes. A traffic signal installation is recommended at this intersection based on the projected traffic volumes and need to service the exceptionally high proportion of heavy vehicles.

PREPARED BY: _____ DATE: _____
Jacobs Engineering Group

RECOMMENDED BY: _____ DATE: _____
District Traffic Engineer

RECOMMENDED BY: _____ DATE: _____
State Traffic Engineer

Appendices

Appendix A. Location Map

Appendix B. Future Build Concept

Appendix C. Traffic Count Data

Appendix D. Traffic Diagrams

Appendix E. Build 2022 Warrant Analysis Sheets (100% Standard)

Appendix F. Build 2042 Warrant Analysis Sheets (100% Standard)

Appendix G. Existing Intersection Analysis

Appendix H. Future Intersection Analysis (No Signal)

Appendix I. Future Intersection Analysis (With Signal)

Appendix J. Left Turn Analysis AM and PM

Appendix K. Roundabout Analysis

Appendix A. Location Map

Study Location
Danielli Dr N
Twin Lakes Rd
Shewette Rd
W Marian Ave
Lake Park
Golf Dr
S Main St
Porter Rd
Kinspy Rd
Loch Laurel Rd
Pikes Pond Rd
Mill Store Rd
Zeigler Rd
Bellville Rd
Enoch Rd
Enoch Lake Cir
Club Rd
GEORGIA
FLORIDA
NW 38th Loop
NW 4th Dr
NW 5th St
NW 26th Ave
NW Co Rd 145
NW 40th Blvd
NW 13th Dr
NW 20th Dr
NW 30th Ave
NW Co Rd 157
NW Co Rd 152
Florida Welcome
Center I-75
376
103
104
41
75

Appendix B. Future Build Concept

Appendix C. Traffic Count Data

BELLVILLE RD @ I-75 SB RAMPS
LOWNDES COUNTY

File Name : TM# 013987-1
Site Code : 00139871
Start Date : 9/7/2016
Page No : 1

Groups Printed- Automobiles - Trucks - Buses

	I-75 SB OFF RAMP Southbound					BELLVILLE RD Westbound					I-75 SB ON RAMP Northbound					BELLVILLE RD Eastbound					
Start Time	Peds	Left	Thru	Right	App. Total	Peds	Left	Thru	Right	App. Total	Peds	Left	Thru	Right	App. Total	Peds	Left	Thru	Right	App. Total	Int. Total
07:00	0	4	0	5	9	0	10	15	0	25	0	0	0	0	0	0	0	16	8	24	58
07:15	0	3	0	12	15	0	9	5	0	14	0	0	0	0	0	0	0	13	11	24	53
07:30	0	7	0	10	17	0	10	9	0	19	0	0	0	0	0	0	0	13	7	20	56
07:45	0	7	0	14	21	0	6	11	0	17	0	0	0	0	0	0	0	13	10	23	61
Total	0	21	0	41	62	0	35	40	0	75	0	0	0	0	0	0	0	55	36	91	228
08:00	0	7	0	12	19	0	8	14	0	22	0	0	0	0	0	0	0	17	11	28	69
08:15	0	4	0	10	14	0	4	16	0	20	0	0	0	0	0	0	0	21	14	35	69
08:30	0	6	0	12	18	0	2	14	0	16	0	0	0	0	0	0	0	27	9	36	70
08:45	0	6	0	16	22	0	9	12	0	21	0	0	0	0	0	0	0	23	14	37	80
Total	0	23	0	50	73	0	23	56	0	79	0	0	0	0	0	0	0	88	48	136	288
09:00	0	7	0	13	20	0	3	17	0	20	0	0	0	0	0	0	0	22	7	29	69
09:15	0	3	1	21	25	0	5	9	0	14	0	0	0	0	0	0	0	18	16	34	73
09:30	0	6	2	11	19	0	6	12	0	18	0	0	0	0	0	0	0	19	17	36	73
09:45	0	7	0	15	22	0	6	11	0	17	0	0	0	0	0	0	0	19	11	30	69
Total	0	23	3	60	86	0	20	49	0	69	0	0	0	0	0	0	0	78	51	129	284
15:00	0	7	0	19	26	0	14	20	0	34	0	0	0	0	0	0	0	18	14	32	92
15:15	0	13	0	15	28	0	10	13	0	23	0	0	0	0	0	0	0	14	14	28	79
15:30	0	11	0	23	34	0	5	14	0	19	0	0	0	0	0	0	0	14	11	25	78
15:45	0	9	0	21	30	0	7	22	0	29	0	0	0	0	0	0	0	19	11	30	89
Total	0	40	0	78	118	0	36	69	0	105	0	0	0	0	0	0	0	65	50	115	338
16:00	0	8	0	25	33	0	8	21	0	29	0	0	0	0	0	0	0	24	10	34	96
16:15	0	16	0	19	35	0	2	11	0	13	0	0	0	0	0	0	0	19	13	32	80
16:30	0	13	1	25	39	0	11	20	0	31	0	0	0	0	0	0	0	17	13	30	100
16:45	0	12	0	5	17	0	5	10	0	15	0	0	0	0	0	0	0	20	22	42	74
Total	0	49	1	74	124	0	26	62	0	88	0	0	0	0	0	0	0	80	58	138	350
17:00	0	11	0	19	30	0	10	16	0	26	0	0	0	0	0	0	0	19	14	33	89
17:15	0	13	1	22	36	0	5	22	0	27	0	0	0	0	0	0	0	15	17	32	95
17:30	0	11	0	19	30	0	8	19	0	27	0	0	0	0	0	0	0	20	14	34	91
17:45	0	13	0	20	33	0	7	18	0	25	0	0	0	0	0	0	0	10	11	21	79
Total	0	48	1	80	129	0	30	75	0	105	0	0	0	0	0	0	0	64	56	120	354
Grand Total	0	204	5	383	592	0	170	351	0	521	0	0	0	0	0	0	0	430	299	729	1842
Apprch %	0	34.5	0.8	64.7		0	32.6	67.4	0		0	0	0	0		0	0	59	41		
Total %	0	11.1	0.3	20.8	32.1	0	9.2	19.1	0	28.3	0	0	0	0	0	0	0	23.3	16.2	39.6	
Automobiles	0	93	4	217	314	0	75	177	0	252	0	0	0	0	0	0	0	245	138	383	949
% Automobiles	0	45.6	80	56.7	53	0	44.1	50.4	0	48.4	0	0	0	0	0	0	0	57	46.2	52.5	51.5
Trucks	0	111	0	158	269	0	95	172	0	267	0	0	0	0	0	0	0	182	153	335	871
% Trucks	0	54.4	0	41.3	45.4	0	55.9	49	0	51.2	0	0	0	0	0	0	0	42.3	51.2	46	47.3
Buses	0	0	1	8	9	0	0	2	0	2	0	0	0	0	0	0	0	3	8	11	22
% Buses	0	0	20	2.1	1.5	0	0	0.6	0	0.4	0	0	0	0	0	0	0	0.7	2.7	1.5	1.2

File Name : TM# 013987-1
Site Code : 00139871
Start Date : 9/7/2016
Page No : 2

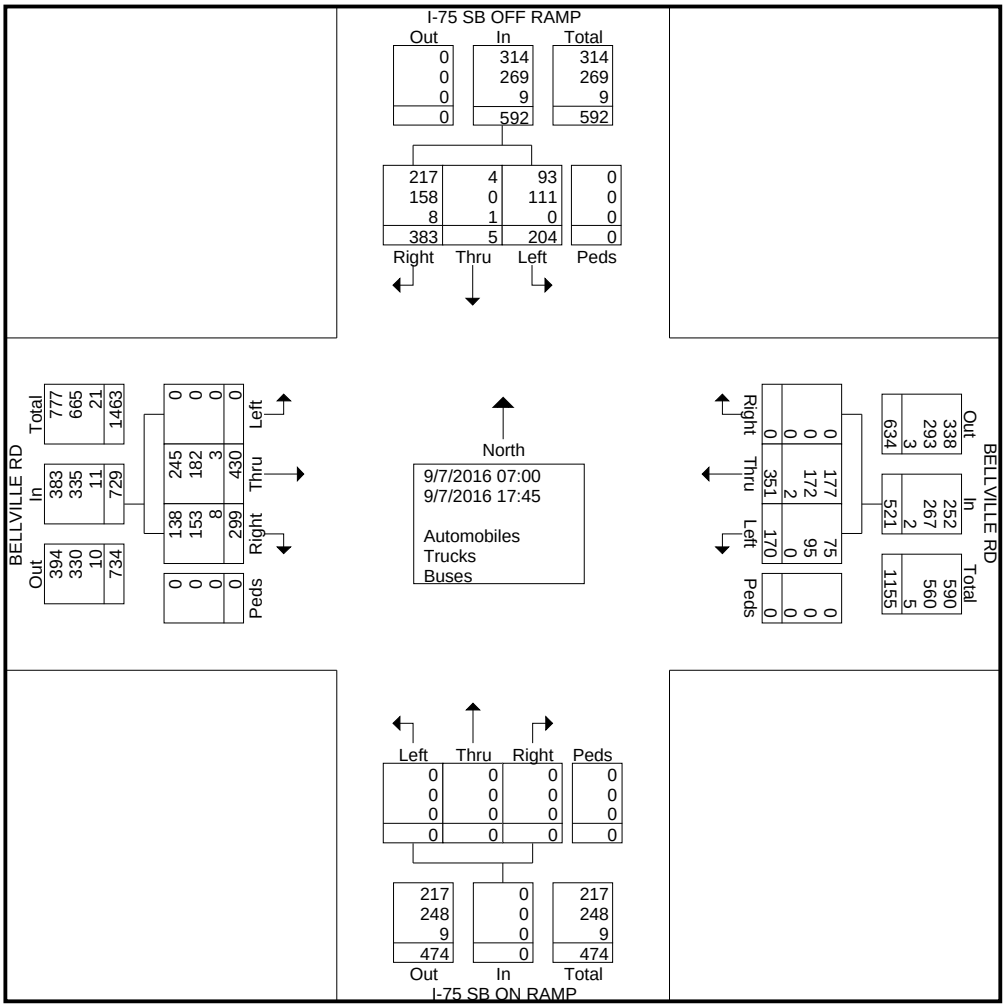

File Name : TM# 013987-1
Site Code : 00139871
Start Date : 9/7/2016
Page No : 3

	I-75 SB OFF RAMP Southbound					BELLVILLE RD Westbound					I-75 SB ON RAMP Northbound					BELLVILLE RD Eastbound					
Start Time	Peds	Left	Thru	Right	App. Total	Peds	Left	Thru	Right	App. Total	Peds	Left	Thru	Right	App. Total	Peds	Left	Thru	Right	App. Total	Int. Total
Peak Hour Analysis From 07:00 to 11:45 - Peak 1 of 1																					
Peak Hour for Entire Intersection Begins at 08:45																					
08:45	0	6	0	16	22	0	**9**	12	0	**21**	0	0	0	0	0	0	0	**23**	14	**37**	**80**
09:00	0	**7**	0	13	20	0	3	**17**	0	20	0	0	0	0	0	0	0	22	7	29	69
09:15	0	3	1	**21**	**25**	0	5	9	0	14	0	0	0	0	0	0	0	18	16	34	73
09:30	0	6	**2**	11	19	0	6	12	0	18	0	0	0	0	0	0	0	19	**17**	36	73
Total Volume	0	22	3	61	86	0	23	50	0	73	0	0	0	0	0	0	0	82	54	136	295
% App. Total	0	25.6	3.5	70.9		0	31.5	68.5	0		0	0	0	0		0	0	60.3	39.7		
PHF	.000	.786	.375	.726	.860	.000	.639	.735	.000	.869	.000	.000	.000	.000	.000	.000	.000	.891	.794	.919	.922

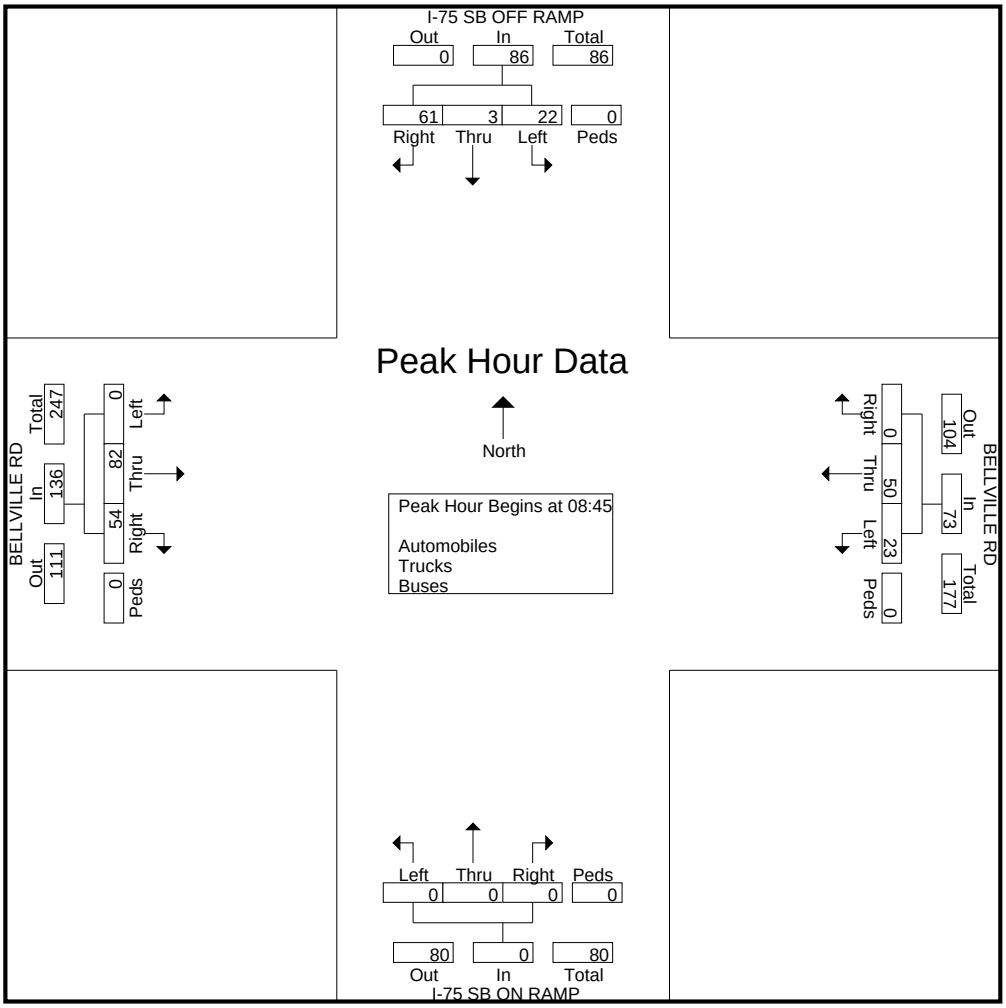

File Name : TM# 013987-1
Site Code : 00139871
Start Date : 9/7/2016
Page No : 4

	I-75 SB OFF RAMP Southbound					BELLVILLE RD Westbound					I-75 SB ON RAMP Northbound					BELLVILLE RD Eastbound					
Start Time	Peds	Left	Thru	Right	App. Total	Peds	Left	Thru	Right	App. Total	Peds	Left	Thru	Right	App. Total	Peds	Left	Thru	Right	App. Total	Int. Total
Peak Hour Analysis From 12:00 to 17:45 - Peak 1 of 1																					
Peak Hour for Entire Intersection Begins at 15:45																					
15:45	0	9	0	21	30	0	7	**22**	0	29	0	0	0	0	0	0	0	19	11	30	89
16:00	0	8	0	**25**	33	0	8	21	0	29	0	0	0	0	0	0	0	**24**	10	**34**	96
16:15	0	**16**	0	19	35	0	2	11	0	13	0	0	0	0	0	0	0	19	**13**	32	80
16:30	0	13	**1**	25	**39**	0	**11**	20	0	**31**	0	0	0	0	0	0	0	17	13	30	**100**
Total Volume	0	46	1	90	137	0	28	74	0	102	0	0	0	0	0	0	0	79	47	126	365
% App. Total	0	33.6	0.7	65.7		0	27.5	72.5	0		0	0	0	0		0	0	62.7	37.3		
PHF	.000	.719	.250	.900	.878	.000	.636	.841	.000	.823	.000	.000	.000	.000	.000	.000	.000	.823	.904	.926	.913

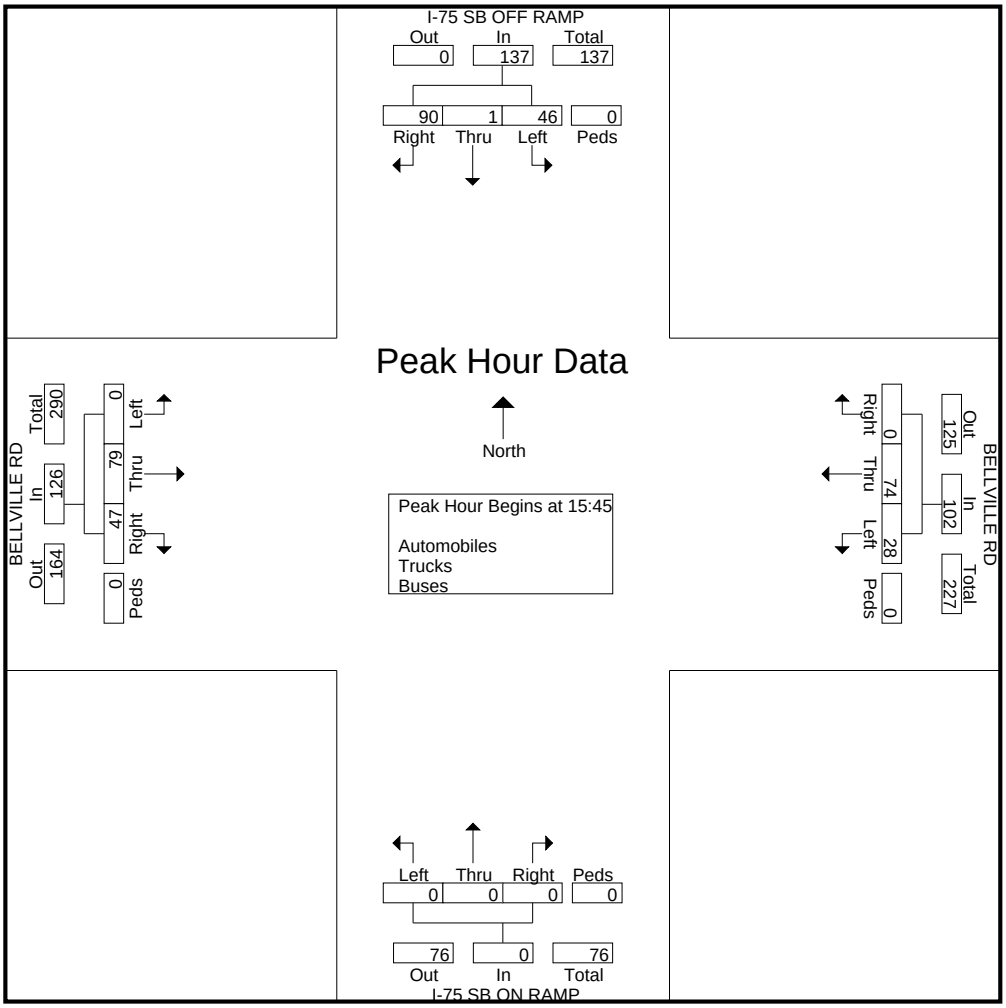

BELLVILLE RD @ I-75 NB RAMPS
LOWNDES COUNTY

File Name : TM# 013987-2
Site Code : 00139872
Start Date : 9/7/2016
Page No : 1

Groups Printed- Automobiles - Trucks - Buses

	i-75 NB ON RAMP Southbound					BELLVILLE RD Westbound					I-75 NB OFF RAMP Northbound					BELLVILLE RD Eastbound					
Start Time	Peds	Left	Thru	Right	App. Total	Peds	Left	Thru	Right	App. Total	Peds	Left	Thru	Right	App. Total	Peds	Left	Thru	Right	App. Total	Int. Total
07:00	0	0	0	0	0	0	0	17	3	20	0	7	0	6	13	0	12	8	0	20	53
07:15	0	0	0	0	0	0	0	10	8	18	0	4	0	8	12	0	9	8	0	17	47
07:30	0	0	0	0	0	0	0	9	16	25	0	14	0	9	23	0	10	10	0	20	68
07:45	0	0	0	0	0	0	0	10	7	17	0	7	0	4	11	0	9	9	0	18	46
Total	0	0	0	0	0	0	0	46	34	80	0	32	0	27	59	0	40	35	0	75	214
08:00	0	0	0	0	0	0	0	15	10	25	0	9	2	6	17	0	11	14	0	25	67
08:15	0	0	0	0	0	0	0	6	10	16	0	12	0	7	19	0	15	9	0	24	59
08:30	0	0	0	0	0	0	0	9	9	18	0	7	0	8	15	0	20	15	0	35	68
08:45	0	0	0	0	0	0	0	15	16	31	0	8	1	9	18	0	16	13	0	29	78
Total	0	0	0	0	0	0	0	45	45	90	0	36	3	30	69	0	62	51	0	113	272
09:00	0	0	0	0	0	0	0	7	8	15	0	11	0	4	15	0	15	14	0	29	59
09:15	0	0	0	0	0	0	0	10	8	18	0	4	0	11	15	0	17	5	0	22	55
09:30	0	0	0	0	0	0	0	12	9	21	0	6	0	14	20	0	14	11	0	25	66
09:45	0	0	0	0	0	0	0	10	9	19	0	7	0	9	16	0	15	6	0	21	56
Total	0	0	0	0	0	0	0	39	34	73	0	28	0	38	66	0	61	36	0	97	236
15:00	0	0	0	0	0	0	0	21	13	34	0	12	0	15	27	0	16	10	0	26	87
15:15	0	0	0	0	0	0	0	14	19	33	0	10	0	15	25	0	13	14	0	27	85
15:30	0	0	0	0	0	0	0	8	15	23	0	10	0	9	19	0	8	15	0	23	65
15:45	0	0	0	0	0	0	0	15	8	23	0	16	0	10	26	0	13	14	0	27	76
Total	0	0	0	0	0	0	0	58	55	113	0	48	0	49	97	0	50	53	0	103	313
16:00	0	0	0	0	0	0	0	17	11	28	0	10	0	13	23	0	13	19	0	32	83
16:15	0	0	0	0	0	0	0	4	8	12	0	8	0	11	19	0	10	25	0	35	66
16:30	0	0	0	0	0	0	0	19	14	33	0	12	1	15	28	0	13	18	0	31	92
16:45	0	0	0	0	0	0	0	10	13	23	0	5	0	20	25	0	15	17	0	32	80
Total	0	0	0	0	0	0	0	50	46	96	0	35	1	59	95	0	51	79	0	130	321
17:00	0	0	0	0	0	0	0	17	16	33	0	9	0	8	17	0	14	18	0	32	82
17:15	0	0	0	0	0	0	0	9	13	22	0	18	0	18	36	0	9	19	0	28	86
17:30	0	0	0	0	0	0	0	18	19	37	0	9	0	11	20	0	14	17	0	31	88
17:45	0	0	0	0	0	0	0	18	7	25	0	7	1	9	17	0	6	17	0	23	65
Total	0	0	0	0	0	0	0	62	55	117	0	43	1	46	90	0	43	71	0	114	321
Grand Total	0	0	0	0	0	0	0	300	269	569	0	222	5	249	476	0	307	325	0	632	1677
Apprch %	0	0	0	0		0	0	52.7	47.3		0	46.6	1.1	52.3		0	48.6	51.4	0		
Total %	0	0	0	0	0	0	0	17.9	16	33.9	0	13.2	0.3	14.8	28.4	0	18.3	19.4	0	37.7	
Automobiles	0	0	0	0	0	0	0	166	147	313	0	89	3	115	207	0	146	193	0	339	859
% Automobiles	0	0	0	0	0	0	0	55.3	54.6	55	0	40.1	60	46.2	43.5	0	47.6	59.4	0	53.6	51.2
Trucks	0	0	0	0	0	0	0	134	122	256	0	131	2	134	267	0	159	131	0	290	813
% Trucks	0	0	0	0	0	0	0	44.7	45.4	45	0	59	40	53.8	56.1	0	51.8	40.3	0	45.9	48.5
Buses	0	0	0	0	0	0	0	0	0	0	0	2	0	0	2	0	2	1	0	3	5
% Buses	0	0	0	0	0	0	0	0	0	0	0	0.9	0	0	0.4	0	0.7	0.3	0	0.5	0.3

File Name : TM# 013987-2
Site Code : 00139872
Start Date : 9/7/2016
Page No : 2

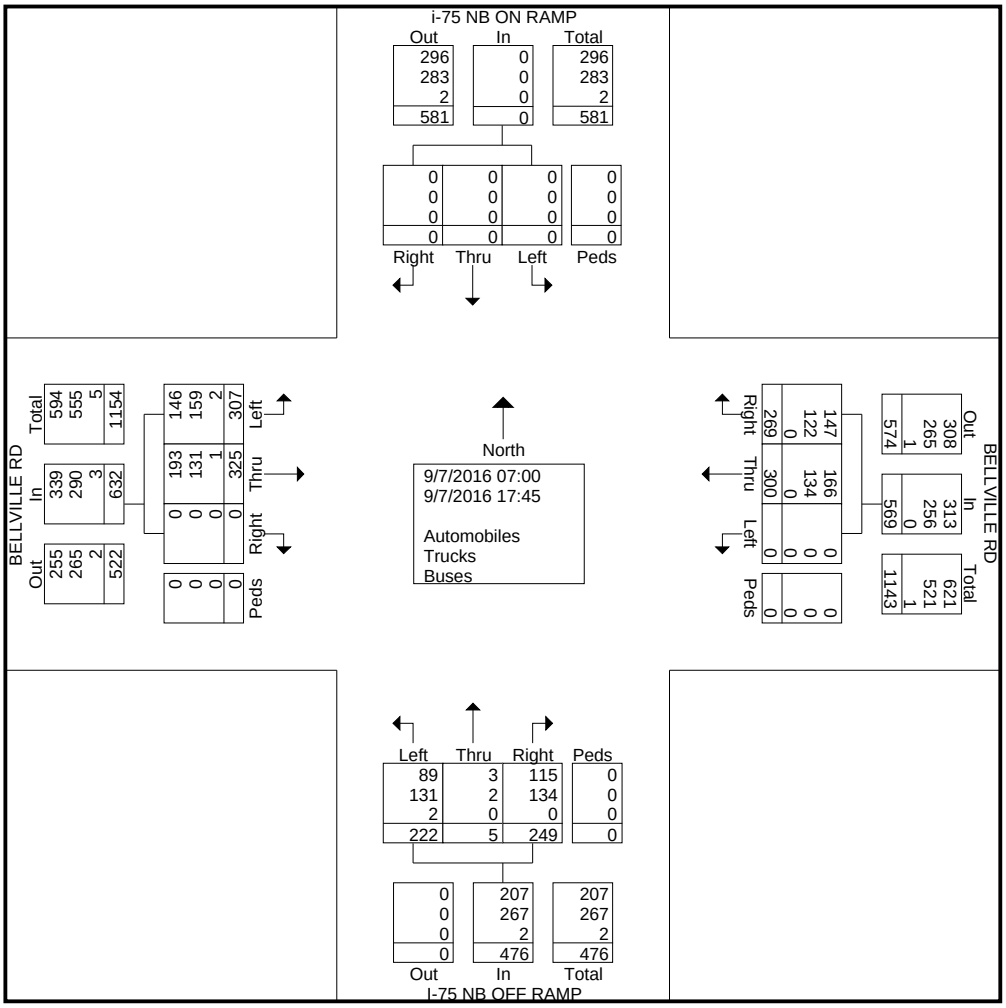

File Name : TM# 013987-2
Site Code : 00139872
Start Date : 9/7/2016
Page No : 3

	i-75 NB ON RAMP Southbound					BELLVILLE RD Westbound					I-75 NB OFF RAMP Northbound					BELLVILLE RD Eastbound					
Start Time	Peds	Left	Thru	Right	App. Total	Peds	Left	Thru	Right	App. Total	Peds	Left	Thru	Right	App. Total	Peds	Left	Thru	Right	App. Total	Int. Total
Peak Hour Analysis From 07:00 to 11:45 - Peak 1 of 1																					
Peak Hour for Entire Intersection Begins at 08:00																					
08:00	0	0	0	0	0	0	0	**15**	10	25	0	9	**2**	6	17	0	11	14	0	25	67
08:15	0	0	0	0	0	0	0	6	10	16	0	**12**	0	7	**19**	0	15	9	0	24	59
08:30	0	0	0	0	0	0	0	9	9	18	0	7	0	8	15	0	**20**	**15**	0	**35**	68
08:45	0	0	0	0	0	0	0	15	**16**	**31**	0	8	1	**9**	18	0	16	13	0	29	**78**
Total Volume	0	0	0	0	0	0	0	45	45	90	0	36	3	30	69	0	62	51	0	113	272
% App. Total	0	0	0	0		0	0	50	50		0	52.2	4.3	43.5		0	54.9	45.1	0		
PHF	.000	.000	.000	.000	.000	.000	.000	.750	.703	.726	.000	.750	.375	.833	.908	.000	.775	.850	.000	.807	.872

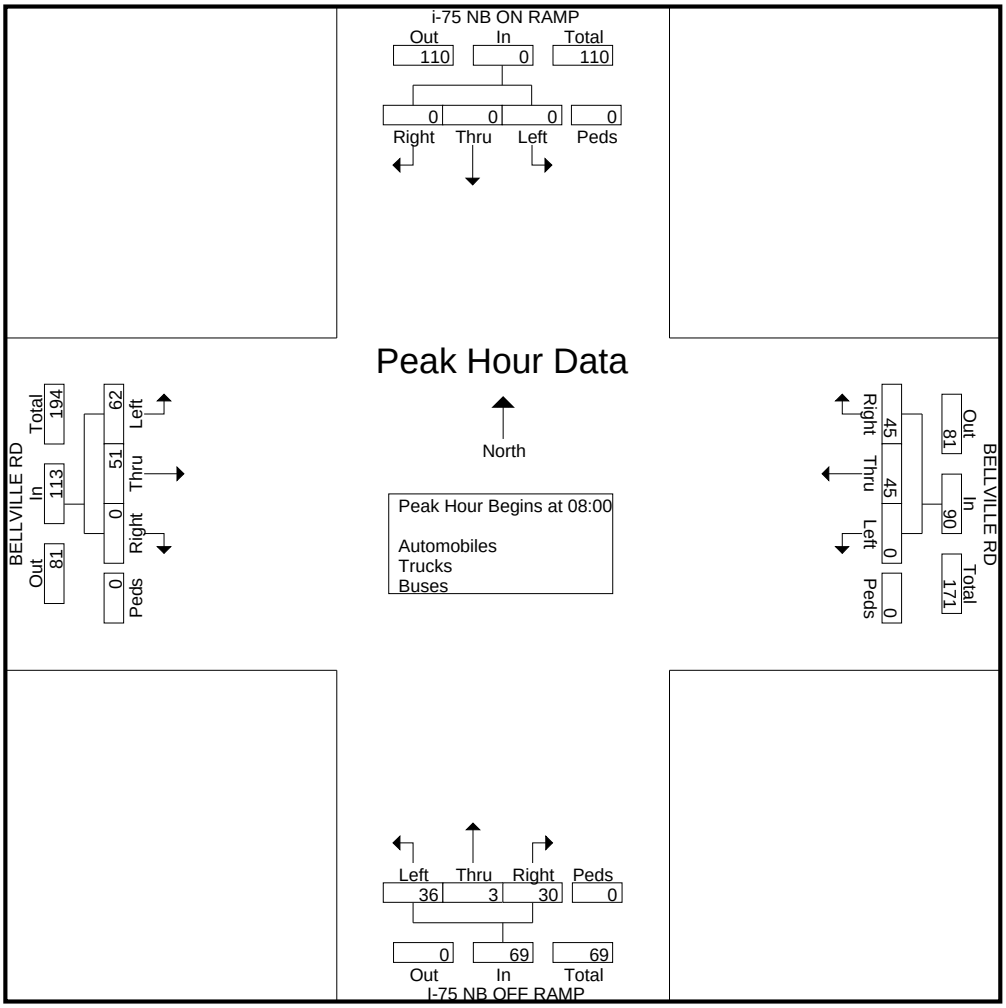

File Name : TM# 013987-2
Site Code : 00139872
Start Date : 9/7/2016
Page No : 4

	i-75 NB ON RAMP Southbound					BELLVILLE RD Westbound					I-75 NB OFF RAMP Northbound					BELLVILLE RD Eastbound					
Start Time	Peds	Left	Thru	Right	App. Total	Peds	Left	Thru	Right	App. Total	Peds	Left	Thru	Right	App. Total	Peds	Left	Thru	Right	App. Total	Int. Total
Peak Hour Analysis From 12:00 to 17:45 - Peak 1 of 1																					
Peak Hour for Entire Intersection Begins at 16:30																					
16:30	0	0	0	0	0	0	0	**19**	14	**33**	0	12	**1**	15	28	0	13	18	0	31	**92**
16:45	0	0	0	0	0	0	0	10	13	23	0	5	0	**20**	25	0	**15**	17	0	**32**	80
17:00	0	0	0	0	0	0	0	17	**16**	33	0	9	0	8	17	0	14	18	0	32	82
17:15	0	0	0	0	0	0	0	9	13	22	0	**18**	0	18	**36**	0	9	**19**	0	28	86
Total Volume	0	0	0	0	0	0	0	55	56	111	0	44	1	61	106	0	51	72	0	123	340
% App. Total	0	0	0	0		0	0	49.5	50.5		0	41.5	0.9	57.5		0	41.5	58.5	0		
PHF	.000	.000	.000	.000	.000	.000	.000	.724	.875	.841	.000	.611	.250	.763	.736	.000	.850	.947	.000	.961	.924

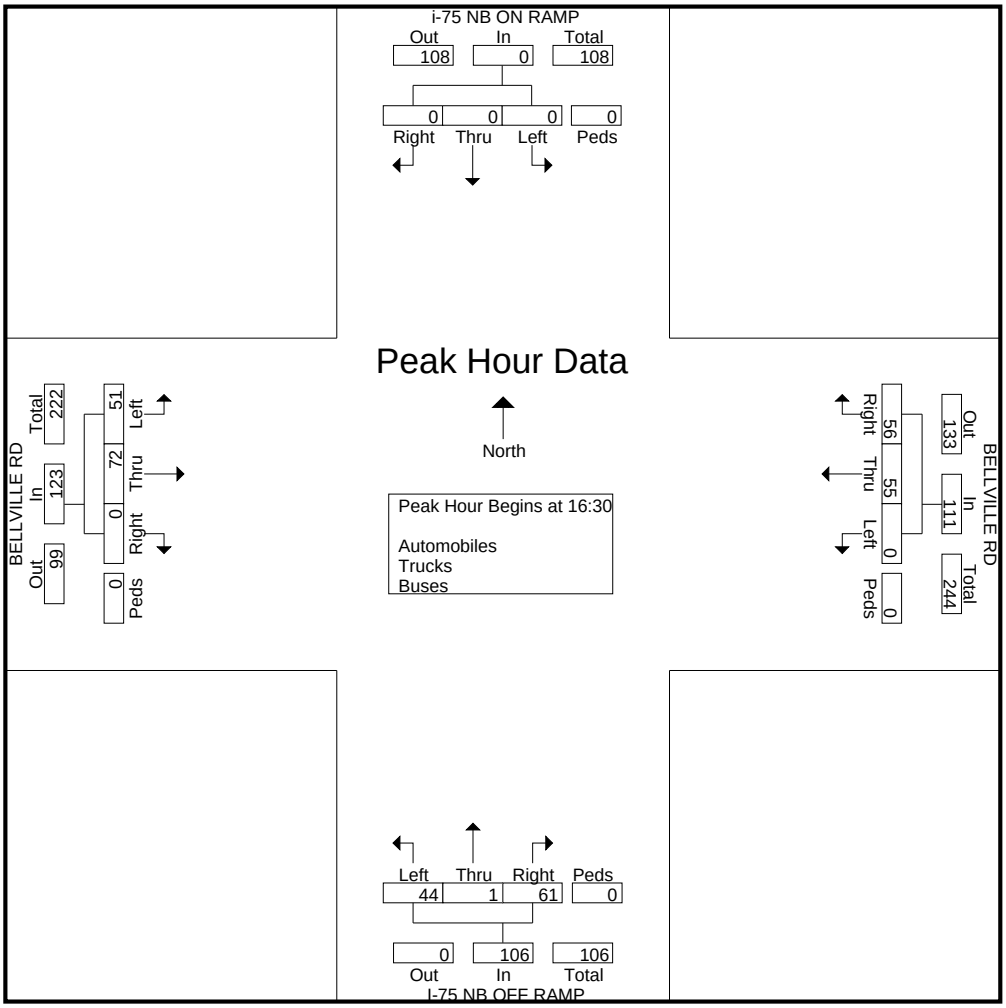

MetroCount Traffic Executive
Event Counts

LOWNDES COUNTY P.I.# 013987 SITE# 9004 BELLVIEW RD E/O I-75 SB RAMPS (EASTBOUND)

DATASETS:

Site:	**[4081] MCSetup factory setup**
ChannelA:	0 - Unused or unknown. - Added to totals. (1)
ChannelB:	0 - Unused or unknown. - Excluded from totals. (0)
Survey Duration:	13:32 Mon 03 Oct 2016 to 14:48 Mon 10 Oct 2016
File:	G:\DATA\2016\Georgia\P.I\P.I.# 013987\408110OCT2016.EC0 (Base)
Identifier:	P3990VGY MC56-L4 [MC55] (c)Microcom 19Sep03
Algorithm:	Event count

PROFILE:

Filter time:	**00:00 Wed 05 Oct 2016 to 00:00 Fri 07 Oct 2016**
Name:	Factory default profile
Method:	Count axles divided by two.
Units:	Non-Metric (ft, mi, f/s, mph, lb, ton)
In profile:	5197 Events

*** Wed 05 Oct 2016 - Total=2391, 15 minute drops,**

0000	0100	0200	0300	0400	0500	0600	0700	0800	0900	1000	1100	1200	1300	1400	1500	1600	1700	1800	1900	2000	2100	2200	2300	
49	**41**	**28**	**44**	**49**	**50**	**80**	**86**	**102**	**118**	**135**	**135**	**165**	**140**	**153**	**162**	**143**	**134**	**145**	**116**	**82**	**97**	**71**	**66**	
16	10	6	14	9	7	10	20	20	28	27	47	**51**	45	39	**42**	42	39	23	32	23	23	12	22	10
11	9	8	10	14	20	29	20	27	30	34	29	**52**	31	50	**48**	29	36	53	31	15	24	16	20	14
13	10	8	9	13	16	13	23	22	32	43	**30**	29	27	29	**41**	24	30	32	28	23	20	15	12	18
9	12	6	11	13	7	28	23	33	28	31	**29**	33	37	**35**	31	48	29	37	25	21	30	28	12	17

*** Thu 06 Oct 2016 - Total=2806, 15 minute drops,**

0000	0100	0200	0300	0400	0500	0600	0700	0800	0900	1000	1100	1200	1300	1400	1500	1600	1700	1800	1900	2000	2100	2200	2300	
59	**42**	**37**	**46**	**45**	**58**	**83**	**99**	**138**	**105**	**140**	**183**	**186**	**176**	**160**	**178**	**177**	**198**	**175**	**161**	**117**	**102**	**85**	**56**	
10	8	7	10	10	9	19	23	35	31	29	**56**	48	48	45	50	38	54	41	40	23	28	19	17	-
14	15	14	12	9	12	17	23	34	26	33	**44**	43	36	24	50	56	51	43	39	31	25	37	20	-
18	8	6	12	15	15	26	28	35	25	44	**36**	41	46	43	34	40	44	57	44	31	25	17	10	-
17	11	10	12	11	22	21	25	34	23	34	**47**	54	46	48	44	43	49	34	38	32	24	12	9	-

MetroCount Traffic Executive
Event Counts

LOWNDES COUNTY P.I.# 013987 SITE# 9004 BELLVIEW RD E/O I-75 SB RAMPS (WESTBOUND)

DATASETS:

Site:	**[4131] 4131**
ChannelA:	1 - North bound, A hit first. - Added to totals. (1)
ChannelB:	0 - Unused or unknown. - Excluded from totals. (0)
Survey Duration:	13:31 Mon 03 Oct 2016 to 15:50 Mon 10 Oct 2016
File:	G:\DATA\2016\Georgia\P.I\P.I.# 013987\413110OCT2016.EC0 (Base)
Identifier:	P254WM29 MC56-L5 [MC55] (c)Microcom 19Oct04
Algorithm:	Event count

PROFILE:

Filter time:	**00:00 Wed 05 Oct 2016 to 00:00 Fri 07 Oct 2016**
Name:	Factory default profile
Method:	Count axles divided by two.
Units:	Non-Metric (ft, mi, f/s, mph, lb, ton)
In profile:	4029 Events

*** Wed 05 Oct 2016 - Total=1867, 15 minute drops,**

0000	0100	0200	0300	0400	0500	0600	0700	0800	0900	1000	1100	1200	1300	1400	1500	1600	1700	1800	1900	2000	2100	2200	2300	
39	**40**	**21**	**31**	**26**	**38**	**45**	**52**	**86**	**108**	**93**	**109**	**128**	**99**	**114**	**129**	**90**	**122**	**112**	**103**	**58**	**99**	**63**	**62**	
9	7	5	7	5	9	6	11	17	23	23	23	**18**	**26**	32	35	25	29	35	25	15	24	15	15	9
6	10	7	8	5	11	12	9	30	27	28	24	**34**	33	22	27	19	36	32	34	14	27	16	16	14
20	9	3	8	6	11	11	16	22	26	14	36	**42**	20	31	30	18	26	22	28	12	27	17	16	18
4	14	6	8	10	7	16	16	17	32	28	**26**	**34**	20	29	37	28	31	23	16	17	21	15	15	11

*** Thu 06 Oct 2016 - Total=2161, 15 minute drops,**

0000	0100	0200	0300	0400	0500	0600	0700	0800	0900	1000	1100	1200	1300	1400	1500	1600	1700	1800	1900	2000	2100	2200	2300	
52	**36**	**37**	**49**	**25**	**43**	**56**	**86**	**87**	**104**	**99**	**106**	**148**	**130**	**116**	**147**	**145**	**115**	**145**	**129**	**106**	**88**	**69**	**43**	
9	10	7	12	7	7	18	24	23	33	24	21	**40**	34	34	34	33	29	30	24	23	18	20	17	-
14	7	9	10	4	9	10	21	24	15	20	24	**29**	23	21	48	32	22	39	31	28	20	22	15	-
18	9	13	15	10	16	13	17	17	35	29	33	**44**	30	30	30	33	35	44	48	29	31	12	5	-
11	10	8	12	4	11	15	24	23	21	26	**28**	35	43	31	35	47	29	32	26	26	19	15	6	-

MetroCount Traffic Executive
GDOT Classification

LOWNDES COUNTY P.I.# 013987 SITE# 9005 I-75 NB OFF RAMP TO BELLVIEW RD

DATASETS:

Site: **[C1144] !c1144**
Direction: 1 - North bound, A hit first., **Lane:** 0
Survey Duration: 16:44 Tue 06 Sep 2016 to 18:22 Tue 13 Sep 2016
File: G:\DATA\2016\Georgia\P.I\P.I.# 013987\UMC1144913.EC0 (Plus)
Identifier: DB48TNDZ MC56-L5 [MC55] (c)Microcom 19Oct04
Algorithm: Factory default

PROFILE:

Filter time: **00:00 Wed 07 Sep 2016 to 00:00 Fri 09 Sep 2016**
Included classes: 1, 2, 3, 4, 5, 6, 7, 8, 9, 10, 11, 12, 13
Speed range: 5 - 100 mph.
Direction: North (bound)
Headway: All
Scheme: Scheme F2
Name: Factory default profile
Method: Vehicle classification
Units: Non-Metric (ft, mi, f/s, mph, lb, ton)

*** Wed 07 Sep 2016 - Thu 08 Sep 2016**

Time	Total	nCL 1	nCL 2	nCL 3	nCL 4	nCL 5	nCL 6	nCL 7	nCL 8	nCL 9	nCL10	nCL11	nCL12	nCL13
0000	58	2	37	2	0	1	1	1	0	9	0	0	1	4
0100	34	0	13	1	1	1	0	0	0	17	1	0	0	0
0200	23	0	4	1	0	1	0	0	0	12	2	0	0	3
0300	17	0	10	0	0	0	0	0	0	7	0	0	0	0
0400	18	0	8	1	1	0	0	0	0	7	0	0	0	1
0500	50	0	32	6	0	1	1	0	1	9	0	0	0	0
0600	31	0	18	7	0	1	0	0	1	4	0	0	0	0
0700	61	0	37	8	1	1	0	0	0	14	0	0	0	0
0800	89	0	51	11	1	2	1	0	1	21	1	0	0	0
0900	68	3	26	5	2	4	3	0	0	25	0	0	0	0
1000	74	1	25	17	1	4	0	0	5	20	0	1	0	0
1100	76	0	34	11	0	2	0	0	4	25	0	0	0	0
1200	100	4	40	12	1	3	3	0	4	31	0	1	1	0
1300	104	1	55	6	1	5	1	0	2	32	0	1	0	0
1400	94	1	41	15	2	1	1	0	1	30	1	1	0	0
1500	117	2	55	8	2	1	3	0	1	44	0	1	0	0
1600	98	3	29	9	3	0	2	0	4	48	0	0	0	0
1700	111	6	47	8	0	1	4	1	5	37	2	0	0	0
1800	102	3	41	5	1	2	5	0	2	39	4	0	0	0
1900	92	1	42	4	3	2	3	0	1	35	0	0	0	1
2000	84	0	46	4	0	3	3	0	0	24	2	0	0	2
2100	66	0	37	3	1	0	3	0	0	20	2	0	0	0
2200	38	0	18	2	1	1	2	0	0	13	1	0	0	0
2300	38	0	14	3	0	1	1	0	1	18	0	0	0	0
Tot.	**1643**	**27**	**760**	**149**	**22**	**38**	**37**	**2**	**33**	**541**	**16**	**5**	**2**	**11**

*** Thu 08 Sep 2016 - Fri 09 Sep 2016**

Time	Total	nCL 1	nCL 2	nCL 3	nCL 4	nCL 5	nCL 6	nCL 7	nCL 8	nCL 9	nCL10	nCL11	nCL12	nCL13
0000	24	0	10	3	0	2	0	0	1	7	1	0	0	0
0100	21	1	6	1	0	1	0	0	0	10	1	0	0	1
0200	19	0	2	2	0	0	0	0	2	12	1	0	0	0
0300	14	0	4	1	0	0	0	0	0	9	0	0	0	0
0400	17	0	5	2	0	0	0	0	0	8	1	1	0	0
0500	34	0	14	7	0	0	0	0	0	13	0	0	0	0
0600	27	0	12	6	0	1	1	0	0	5	1	1	0	0
0700	58	2	23	10	2	6	0	0	1	14	0	0	0	0
0800	35	0	18	2	1	4	0	0	2	8	0	0	0	0
0900	60	2	19	10	0	4	4	0	0	21	0	0	0	0
1000	64	0	22	12	0	4	1	0	4	21	0	0	0	0
1100	97	2	36	16	2	8	5	0	2	26	0	0	0	0
1200	98	2	51	12	1	5	0	0	1	24	0	0	0	2
1300	94	1	42	9	3	3	1	0	1	33	1	0	0	0
1400	105	0	46	12	1	4	1	0	1	38	2	0	0	0
1500	98	1	39	12	1	5	1	0	3	35	0	0	0	1
1600	105	3	38	9	2	2	2	0	3	45	0	1	0	0
1700	119	3	56	11	0	1	3	0	5	39	0	0	0	1
1800	114	1	43	5	0	7	4	0	2	51	1	0	0	0
1900	68	2	20	1	5	2	3	0	1	33	1	0	0	0
2000	89	6	35	5	1	3	3	0	4	29	3	0	0	0
2100	63	0	33	3	0	1	2	0	1	22	0	0	0	1
2200	43	2	13	1	1	0	2	0	3	21	0	0	0	0
2300	42	0	17	7	1	2	0	0	1	14	0	0	0	0
Tot.	**1508**	**28**	**604**	**159**	**21**	**65**	**33**	**0**	**38**	**538**	**13**	**3**	**0**	**6**

Reliable Traffic Data Services, LLC

Tel: (770) 578-8158 Fax: (770) 578-8159
info@reliabletraffic.org | www.reliabletraffic.org

Classification Data

Site Code: 39300102
Bellville Rd East of
I-75 NB Ramp

Eastbound

Start Time	Class 1	Class 2	Class 3	Class 4	Class 5	Class 6	Class 7	Class 8	Class 9	Class 10	Class 11	Class 12	Class 13	Class 14	Total
10/25/16	0	4	2	0	0	0	0	0	1	0	0	0	0	0	7
00:15	0	5	3	0	0	1	0	0	4	0	0	0	0	0	13
00:30	0	1	0	0	0	0	0	0	1	0	0	0	0	0	2
00:45	0	5	2	0	0	0	0	0	3	0	0	0	0	0	10
	0	15	7	0	0	1	0	0	9	0	0	0	0	0	32
01:00	0	2	0	0	0	2	0	0	4	0	0	0	0	0	8
01:15	0	5	0	0	0	2	0	0	5	0	0	0	0	0	12
01:30	0	3	0	0	0	0	0	0	1	0	0	0	0	0	4
01:45	0	3	3	0	0	0	0	0	2	0	0	0	0	0	8
	0	13	3	0	0	4	0	0	12	0	0	0	0	0	32
02:00	0	0	1	0	0	0	0	0	4	0	0	0	0	0	5
02:15	0	0	0	0	0	0	0	0	0	0	0	0	0	0	0
02:30	0	0	0	0	0	0	0	0	2	0	0	0	0	0	2
02:45	0	0	2	0	0	0	0	0	1	0	0	0	0	0	3
	0	0	3	0	0	0	0	0	7	0	0	0	0	0	10
03:00	0	1	1	0	0	0	0	0	3	0	0	0	0	0	5
03:15	0	2	0	0	0	0	0	0	1	0	0	0	0	0	3
03:30	0	2	1	0	0	0	0	0	1	0	0	0	0	0	4
03:45	0	0	0	0	0	0	0	0	3	0	0	0	0	0	3
	0	5	2	0	0	0	0	0	8	0	0	0	0	0	15
04:00	0	2	0	0	0	0	0	0	2	0	0	0	0	0	4
04:15	0	2	1	0	0	0	0	0	4	0	0	0	0	0	7
04:30	0	4	0	0	0	0	0	0	1	0	0	0	0	0	5
04:45	0	4	3	0	0	3	0	0	4	0	0	0	0	0	14
	0	12	4	0	0	3	0	0	11	0	0	0	0	0	30
05:00	0	2	0	0	0	0	0	0	5	0	0	0	0	0	7
05:15	1	6	1	0	0	2	0	0	7	0	0	0	0	0	17
05:30	0	3	1	0	0	2	0	0	5	0	0	0	0	0	11
05:45	3	9	3	0	0	2	0	0	6	0	0	0	0	0	23
	4	20	5	0	0	6	0	0	23	0	0	0	0	0	58
06:00	0	6	3	0	0	1	0	0	5	0	0	0	0	0	15
06:15	0	1	1	0	0	0	0	0	0	0	0	0	0	0	2
06:30	0	5	2	0	0	0	0	0	7	0	0	0	0	0	14
06:45	0	5	2	0	0	1	0	0	2	0	0	0	0	0	10
	0	17	8	0	0	2	0	0	14	0	0	0	0	0	41
07:00	0	9	2	0	0	0	0	0	8	0	0	0	0	0	19
07:15	0	5	1	0	0	2	0	0	5	0	0	0	0	0	13
07:30	1	5	3	0	0	0	0	0	10	0	0	0	0	0	19
07:45	0	7	1	0	0	1	0	0	9	0	0	0	0	0	18
	1	26	7	0	0	3	0	0	32	0	0	0	0	0	69
08:00	2	8	3	0	0	0	0	0	12	0	0	0	0	0	25
08:15	3	6	2	0	0	1	0	0	6	0	0	0	0	0	18
08:30	0	5	1	0	0	1	0	0	7	0	0	0	0	0	14
08:45	1	3	2	0	0	0	0	0	8	0	0	0	0	0	14
	6	22	8	0	0	2	0	0	33	0	0	0	0	0	71
09:00	3	10	3	0	0	3	0	0	8	0	0	0	0	0	27
09:15	0	4	2	0	0	3	0	0	5	0	0	0	0	0	14
09:30	0	7	2	0	0	1	0	0	9	0	0	0	0	0	19
09:45	0	5	4	0	0	0	0	0	4	0	0	0	0	0	13
	3	26	11	0	0	7	0	0	26	0	0	0	0	0	73
10:00	0	7	5	0	3	0	0	1	9	0	0	0	0	0	25
10:15	2	9	2	0	0	3	0	3	11	0	0	0	0	0	30
10:30	3	6	4	0	0	2	0	0	3	0	0	0	0	0	18
10:45	3	10	2	0	0	0	0	0	6	0	0	0	0	0	21
	8	32	13	0	3	5	0	4	29	0	0	0	0	0	94
11:00	0	9	3	0	0	1	0	0	8	0	0	0	0	0	21
11:15	1	15	3	0	3	0	0	1	12	0	0	0	0	0	35
11:30	1	6	0	0	0	1	0	0	5	0	0	0	0	0	13
11:45	0	8	2	0	0	1	0	3	11	0	0	0	0	0	25
	2	38	8	0	3	3	0	4	36	0	0	0	0	0	94
Total	24	226	79	0	6	36	0	8	240	0	0	0	0	0	619
Percent	3.9%	36.5%	12.8%	0.0%	1.0%	5.8%	0.0%	1.3%	38.8%	0.0%	0.0%	0.0%	0.0%	0.0%	

Reliable Traffic Data Services, LLC

Tel: (770) 578-8158 Fax: (770) 578-8159
info@reliabletraffic.org | www.reliabletraffic.org

Classification Data

Site Code: 39300102
Bellville Rd East of
I-75 NB Ramp

Eastbound

Start Time	Class 1	Class 2	Class 3	Class 4	Class 5	Class 6	Class 7	Class 8	Class 9	Class 10	Class 11	Class 12	Class 13	Class 14	Total
12 PM	2	6	1	0	0	1	0	0	10	0	0	0	0	0	20
12:15	0	9	1	0	1	3	0	2	10	0	0	0	0	0	26
12:30	1	10	1	0	0	1	0	0	6	0	0	0	0	0	19
12:45	1	12	5	0	2	2	0	1	11	0	0	0	0	0	34
	4	37	8	0	3	7	0	3	37	0	0	0	0	0	99
13:00	3	17	2	0	0	2	0	0	17	0	0	0	0	0	41
13:15	1	9	5	0	0	3	0	1	10	0	0	0	0	0	29
13:30	3	7	3	0	0	1	0	1	8	0	0	0	0	0	23
13:45	1	16	4	0	3	1	0	2	15	1	0	0	0	0	43
	8	49	14	0	3	7	0	4	50	1	0	0	0	0	136
14:00	3	8	2	0	1	1	0	1	7	0	0	0	0	0	23
14:15	3	9	4	0	3	0	0	1	12	0	0	0	0	0	32
14:30	0	14	5	0	1	0	0	3	11	0	0	0	0	0	34
14:45	1	11	5	0	0	2	0	1	16	0	0	0	0	0	36
	7	42	16	0	5	3	0	6	46	0	0	0	0	0	125
15:00	1	14	6	0	1	1	0	3	11	0	0	0	0	0	37
15:15	1	14	4	0	1	1	0	2	10	0	0	0	0	0	33
15:30	3	12	2	0	3	2	0	0	11	0	0	0	0	0	33
15:45	3	10	4	0	1	2	0	1	16	0	0	0	0	0	37
	8	50	16	0	6	6	0	6	48	0	0	0	0	0	140
16:00	1	11	2	0	0	0	0	2	8	0	0	0	0	0	24
16:15	1	14	5	0	2	2	0	1	7	0	0	0	0	0	32
16:30	1	11	5	0	0	3	0	1	10	0	0	0	0	0	31
16:45	3	11	1	0	0	1	0	2	9	0	0	0	0	0	27
	6	47	13	0	2	6	0	6	34	0	0	0	0	0	114
17:00	2	19	5	0	2	2	0	1	16	0	0	0	0	0	47
17:15	1	10	6	0	1	2	0	1	14	0	0	0	0	0	35
17:30	1	9	4	0	2	3	0	1	12	0	0	0	0	0	32
17:45	0	11	5	0	1	0	0	0	16	0	0	0	0	0	33
	4	49	20	0	6	7	0	3	58	0	0	0	0	0	147
18:00	0	15	4	0	1	1	0	3	17	0	0	0	0	0	41
18:15	2	8	2	0	2	1	0	0	11	0	0	0	0	0	26
18:30	3	6	4	0	0	1	0	0	8	0	0	0	0	0	22
18:45	2	10	4	0	0	0	0	2	9	0	0	0	0	0	27
	7	39	14	0	3	3	0	5	45	0	0	0	0	0	116
19:00	1	5	3	0	0	3	0	1	11	0	0	0	0	0	24
19:15	1	8	3	0	2	2	0	0	16	0	0	0	0	0	32
19:30	1	9	2	0	0	1	0	0	5	0	0	0	0	0	18
19:45	0	4	3	0	0	1	0	0	6	0	0	0	0	0	14
	3	26	11	0	2	7	0	1	38	0	0	0	0	0	88
20:00	0	6	1	0	0	1	0	0	8	0	0	0	0	0	16
20:15	1	9	2	0	0	1	0	0	9	0	0	0	0	0	22
20:30	1	9	2	0	0	2	0	0	9	0	0	0	0	0	23
20:45	0	5	0	0	0	3	0	0	6	0	0	0	0	0	14
	2	29	5	0	0	7	0	0	32	0	0	0	0	0	75
21:00	2	4	1	0	0	0	0	0	9	0	0	0	0	0	16
21:15	0	5	1	0	0	0	0	0	2	0	0	0	0	0	8
21:30	0	4	1	0	0	0	0	0	3	0	0	0	0	0	8
21:45	0	6	3	0	0	1	0	0	6	0	0	0	0	0	16
	2	19	6	0	0	1	0	0	20	0	0	0	0	0	48
22:00	0	3	3	0	0	0	0	0	1	0	0	0	0	0	7
22:15	0	4	1	0	0	1	0	0	6	0	0	0	0	0	12
22:30	0	6	3	0	0	1	0	0	3	0	0	0	0	0	13
22:45	0	3	3	0	0	1	0	0	3	0	0	0	0	0	10
	0	16	10	0	0	3	0	0	13	0	0	0	0	0	42
23:00	1	10	5	0	0	1	0	1	11	0	0	0	0	0	29
23:15	0	4	0	0	0	3	0	0	4	0	0	0	0	0	11
23:30	0	1	0	0	0	0	0	0	2	0	0	0	0	0	3
23:45	0	0	0	0	0	0	0	0	1	0	0	0	0	0	1
	1	15	5	0	0	4	0	1	18	0	0	0	0	0	44
Total	52	418	138	0	30	61	0	35	439	1	0	0	0	0	1174
Percent	4.4%	35.6%	11.8%	0.0%	2.6%	5.2%	0.0%	3.0%	37.4%	0.1%	0.0%	0.0%	0.0%	0.0%	

Reliable Traffic Data Services, LLC

Tel: (770) 578-8158 Fax: (770) 578-8159
info@reliabletraffic.org | www.reliabletraffic.org

Classification Data

Site Code: 39300102
Bellville Rd East of
I-75 NB Ramp

Eastbound

Start Time	Class 1	Class 2	Class 3	Class 4	Class 5	Class 6	Class 7	Class 8	Class 9	Class 10	Class 11	Class 12	Class 13	Class 14	Total
10/26/16	0	0	0	0	0	0	0	0	2	0	0	0	0	0	2
00:15	0	3	0	0	0	3	0	0	7	0	0	0	0	0	13
00:30	0	3	0	0	0	0	0	3	2	0	0	0	0	0	8
00:45	1	3	0	0	0	0	0	2	3	0	0	0	0	0	9
	1	9	0	0	0	3	0	5	14	0	0	0	0	0	32
01:00	0	0	0	0	0	0	0	0	7	0	1	0	0	0	8
01:15	0	4	1	0	0	1	0	0	4	0	0	0	0	0	10
01:30	1	0	0	0	0	0	0	0	3	0	0	0	0	0	4
01:45	0	0	0	0	0	0	0	0	6	0	0	0	0	0	6
	1	4	1	0	0	1	0	0	20	0	1	0	0	0	28
02:00	0	3	0	0	0	1	0	0	3	0	0	0	0	0	7
02:15	0	0	0	0	1	0	0	0	0	0	0	0	0	0	1
02:30	0	0	0	0	0	0	0	0	1	0	0	0	0	0	1
02:45	0	2	0	0	0	0	0	4	0	0	0	0	0	0	6
	0	5	0	0	1	1	0	4	4	0	0	0	0	0	15
03:00	0	0	0	0	0	0	0	0	3	0	0	0	0	0	3
03:15	0	1	2	0	0	0	0	0	2	0	0	0	0	0	5
03:30	0	3	2	0	0	0	0	0	3	0	0	0	0	0	8
03:45	0	1	0	0	0	0	0	0	3	0	0	0	0	0	4
	0	5	4	0	0	0	0	0	11	0	0	0	0	0	20
04:00	0	0	0	0	0	0	0	0	0	0	0	0	0	0	0
04:15	0	0	1	0	0	0	0	0	4	0	0	0	0	0	5
04:30	0	3	0	0	0	0	0	0	5	0	0	0	0	0	8
04:45	0	4	2	0	0	0	0	0	5	0	0	0	0	0	11
	0	7	3	0	0	0	0	0	14	0	0	0	0	0	24
05:00	0	7	0	0	0	0	0	0	3	0	0	0	0	0	10
05:15	0	3	0	0	0	2	0	0	3	0	0	0	0	0	8
05:30	0	3	2	0	0	1	0	0	7	0	0	0	0	0	13
05:45	0	5	0	0	0	2	0	0	7	0	0	0	0	0	14
	0	18	2	0	0	5	0	0	20	0	0	0	0	0	45
06:00	0	4	3	0	0	3	0	0	6	0	0	0	0	0	16
06:15	0	5	1	0	0	0	0	0	3	0	0	0	0	0	9
06:30	0	7	2	0	0	2	0	0	3	0	0	0	0	0	14
06:45	0	3	2	0	0	0	0	0	4	0	0	0	0	0	9
	0	19	8	0	0	5	0	0	16	0	0	0	0	0	48
07:00	0	6	4	0	0	1	0	0	3	0	0	0	0	0	14
07:15	0	4	0	0	0	0	0	0	5	0	0	0	0	0	9
07:30	0	6	2	0	0	3	0	0	10	0	0	0	0	0	21
07:45	3	7	1	0	0	1	0	0	6	0	0	0	0	0	18
	3	23	7	0	0	5	0	0	24	0	0	0	0	0	62
08:00	2	8	1	0	0	0	0	0	7	0	0	0	0	0	18
08:15	1	9	2	0	0	1	0	0	5	0	0	0	0	0	18
08:30	0	5	0	0	0	3	0	0	4	0	0	0	0	0	12
08:45	0	6	0	0	0	3	0	0	8	0	0	0	0	0	17
	3	28	3	0	0	7	0	0	24	0	0	0	0	0	65
09:00	1	11	0	0	0	1	0	0	10	0	0	0	0	0	23
09:15	0	7	1	0	0	1	0	0	8	0	0	0	0	0	17
09:30	0	4	2	0	0	3	0	0	8	0	0	0	0	0	17
09:45	1	8	4	0	0	1	0	0	4	0	0	0	0	0	18
	2	30	7	0	0	6	0	0	30	0	0	0	0	0	75
10:00	2	9	3	0	0	3	0	1	10	0	0	0	0	0	28
10:15	3	7	2	0	0	3	0	0	7	0	0	0	0	0	22
10:30	1	11	4	0	0	3	0	2	7	0	0	0	0	0	28
10:45	0	5	4	0	0	3	0	0	8	0	0	0	0	0	20
	6	32	13	0	0	12	0	3	32	0	0	0	0	0	98
11:00	0	10	2	0	0	1	0	1	10	0	0	0	0	0	24
11:15	1	11	5	0	2	0	0	3	16	0	0	0	0	0	38
11:30	2	6	5	0	0	1	0	2	8	0	0	0	0	0	24
11:45	1	17	6	0	0	0	0	3	17	0	0	0	0	0	44
	4	44	18	0	2	2	0	9	51	0	0	0	0	0	130
Total	20	224	66	0	3	47	0	21	260	0	1	0	0	0	642
Percent	3.1%	34.9%	10.3%	0.0%	0.5%	7.3%	0.0%	3.3%	40.5%	0.0%	0.2%	0.0%	0.0%	0.0%	

Reliable Traffic Data Services, LLC

Tel: (770) 578-8158 Fax: (770) 578-8159
info@reliabletraffic.org | www.reliabletraffic.org

Classification Data

Site Code: 39300102
Bellville Rd East of
I-75 NB Ramp

Eastbound

Start Time	Class 1	Class 2	Class 3	Class 4	Class 5	Class 6	Class 7	Class 8	Class 9	Class 10	Class 11	Class 12	Class 13	Class 14	Total
12 PM	0	14	4	0	0	1	0	0	4	0	0	0	0	0	23
12:15	0	17	4	1	1	0	0	0	12	0	0	0	0	0	35
12:30	0	15	6	0	0	0	0	2	15	0	0	3	0	0	41
12:45	0	11	3	0	3	0	0	0	10	0	0	0	0	0	27
	0	57	17	1	4	1	0	2	41	0	0	3	0	0	126
13:00	0	18	4	0	0	0	0	2	15	0	0	0	0	0	39
13:15	0	17	2	0	2	0	0	1	9	0	0	0	0	0	31
13:30	0	11	5	0	0	0	0	2	12	0	0	0	0	0	30
13:45	0	12	3	0	0	3	0	0	11	0	0	0	0	0	29
	0	58	14	0	2	3	0	5	47	0	0	0	0	0	129
14:00	0	16	3	0	2	3	1	2	16	0	0	0	0	0	43
14:15	0	5	3	0	1	0	0	4	6	0	1	1	0	0	21
14:30	0	8	6	0	2	2	2	0	11	0	0	0	0	0	31
14:45	3	17	1	1	0	0	0	3	11	0	0	0	0	0	36
	3	46	13	1	5	5	3	9	44	0	1	1	0	0	131
15:00	0	23	4	0	0	2	0	1	21	0	0	0	1	0	52
15:15	0	9	3	0	2	3	0	0	20	0	0	0	0	0	37
15:30	0	8	3	0	1	0	0	0	7	0	0	0	0	0	19
15:45	0	7	0	0	3	0	0	0	16	0	0	0	0	0	26
	0	47	10	0	6	5	0	1	64	0	0	0	1	0	134
16:00	0	20	2	0	0	2	0	3	12	0	0	0	0	0	39
16:15	0	12	4	0	0	1	0	2	9	0	2	0	0	0	30
16:30	0	17	7	0	1	1	0	0	14	0	0	0	0	0	40
16:45	0	14	7	0	0	3	0	0	17	3	0	0	0	0	44
	0	63	20	0	1	7	0	5	52	3	2	0	0	0	153
17:00	0	12	4	0	0	4	0	0	16	1	0	0	0	0	37
17:15	3	15	5	0	1	3	0	0	7	0	0	0	0	0	34
17:30	0	7	2	0	0	1	0	0	8	0	0	0	0	0	18
17:45	0	10	7	0	3	0	0	2	9	0	2	0	0	0	33
	3	44	18	0	4	8	0	2	40	1	2	0	0	0	122
18:00	1	12	1	0	1	2	0	0	18	0	0	0	0	0	35
18:15	1	7	2	0	0	0	0	0	16	0	0	0	0	0	26
18:30	0	10	0	0	1	0	0	2	7	0	0	0	0	0	20
18:45	0	8	5	0	1	3	0	3	2	0	0	0	0	0	22
	2	37	8	0	3	5	0	5	43	0	0	0	0	0	103
19:00	3	4	1	0	0	3	0	0	15	0	0	0	0	0	26
19:15	0	5	3	0	0	0	0	3	17	1	0	0	0	0	29
19:30	0	7	0	0	0	1	0	0	8	3	0	0	0	0	19
19:45	0	6	1	0	0	0	0	0	8	0	0	0	0	0	15
	3	22	5	0	0	4	0	3	48	4	0	0	0	0	89
20:00	0	12	1	0	0	0	0	0	7	0	0	0	0	0	20
20:15	0	4	3	0	0	3	0	0	5	0	0	0	0	0	15
20:30	0	6	0	0	0	1	0	0	7	0	0	0	0	0	14
20:45	0	5	4	0	0	0	0	0	6	0	0	0	0	0	15
	0	27	8	0	0	4	0	0	25	0	0	0	0	0	64
21:00	0	7	0	0	0	1	0	0	3	0	0	0	0	0	11
21:15	0	4	3	0	0	1	0	0	5	0	0	0	0	0	13
21:30	0	2	1	0	0	0	0	0	4	0	0	0	0	0	7
21:45	0	5	3	0	0	0	0	0	2	0	0	0	0	0	10
	0	18	7	0	0	2	0	0	14	0	0	0	0	0	41
22:00	0	1	1	0	0	0	0	0	4	0	0	0	0	0	6
22:15	0	9	2	0	0	1	0	0	6	0	0	0	0	0	18
22:30	0	2	0	0	0	0	0	0	3	0	0	0	0	0	5
22:45	0	5	0	0	0	1	0	0	7	0	0	0	0	0	13
	0	17	3	0	0	2	0	0	20	0	0	0	0	0	42
23:00	0	9	4	0	0	0	0	0	9	0	0	0	0	0	22
23:15	0	5	3	0	0	0	0	3	5	0	0	0	0	0	16
23:30	0	4	0	0	0	0	0	0	3	2	0	0	0	0	9
23:45	0	2	2	0	0	0	0	0	0	0	0	0	0	0	4
	0	20	9	0	0	0	0	3	17	2	0	0	0	0	51
Total	11	456	132	2	25	46	3	35	455	10	5	4	1	0	1185
Percent	0.9%	38.5%	11.1%	0.2%	2.1%	3.9%	0.3%	3.0%	38.4%	0.8%	0.4%	0.3%	0.1%	0.0%	
Grand Total	107	1324	415	2	64	190	3	99	1394	11	6	4	1	0	3620
Percent	3.0%	36.6%	11.5%	0.1%	1.8%	5.2%	0.1%	2.7%	38.5%	0.3%	0.2%	0.1%	0.0%	0.0%	

Reliable Traffic Data Services, LLC

Tel: (770) 578-8158 Fax: (770) 578-8159
info@reliabletraffic.org | www.reliabletraffic.org

Classification Data

Site Code: 39300102
Bellville Rd East of
I-75 NB Ramp

Westbound

Start Time	Class 1	Class 2	Class 3	Class 4	Class 5	Class 6	Class 7	Class 8	Class 9	Class 10	Class 11	Class 12	Class 13	Class 14	Total
10/25/16	3	5	1	0	0	1	0	1	1	0	0	0	0	0	12
00:15	0	1	0	0	0	1	0	0	4	0	0	0	0	0	6
00:30	1	1	0	0	0	2	0	0	5	0	0	0	0	0	9
00:45	0	2	0	0	0	0	0	0	4	0	0	0	0	0	6
	4	9	1	0	0	4	0	1	14	0	0	0	0	0	33
01:00	0	2	0	0	0	0	0	1	11	0	0	0	0	0	14
01:15	0	2	0	0	0	0	0	0	2	0	1	0	0	0	5
01:30	0	2	1	0	0	0	0	0	3	0	0	0	0	0	6
01:45	0	1	0	0	0	1	0	0	4	0	0	0	0	0	6
	0	7	1	0	0	1	0	1	20	0	1	0	0	0	31
02:00	1	2	1	0	0	0	0	0	3	0	0	0	0	0	7
02:15	0	1	0	0	0	0	0	0	1	0	0	0	0	0	2
02:30	0	0	0	0	0	0	0	0	5	0	0	0	0	0	5
02:45	0	0	0	0	0	0	0	0	2	1	0	0	0	0	3
	1	3	1	0	0	0	0	0	11	1	0	0	0	0	17
03:00	0	3	1	0	0	0	0	0	2	0	0	0	0	0	6
03:15	0	4	1	0	0	0	0	0	2	0	0	0	0	0	7
03:30	0	3	0	0	0	0	0	0	3	0	0	0	0	0	6
03:45	0	5	0	0	0	0	0	0	4	0	0	0	0	0	9
	0	15	2	0	0	0	0	0	11	0	0	0	0	0	28
04:00	1	3	1	0	0	1	1	1	2	0	0	0	0	0	10
04:15	1	0	0	0	0	1	0	0	1	0	0	0	0	0	3
04:30	2	1	1	0	0	2	0	0	3	0	0	0	0	0	9
04:45	0	5	1	0	0	2	0	0	2	0	1	0	0	0	11
	4	9	3	0	0	6	1	1	8	0	1	0	0	0	33
05:00	0	1	0	0	0	0	0	0	1	0	0	0	0	0	2
05:15	0	2	1	0	1	0	0	1	2	0	0	0	0	0	7
05:30	1	3	1	0	0	0	0	0	6	0	0	0	0	0	11
05:45	2	7	0	0	0	2	0	0	4	0	0	0	0	0	15
	3	13	2	0	1	2	0	1	13	0	0	0	0	0	35
06:00	1	3	2	0	0	2	0	1	1	0	0	1	0	0	11
06:15	0	7	1	0	0	0	0	2	7	0	0	0	0	0	17
06:30	2	7	2	0	0	1	0	0	4	0	0	0	0	0	16
06:45	1	4	3	0	1	1	0	0	6	0	0	0	0	0	16
	4	21	8	0	1	4	0	3	18	0	0	1	0	0	60
07:00	0	6	1	0	0	0	0	0	6	0	0	0	1	0	14
07:15	0	6	0	0	0	1	0	0	6	0	0	0	0	0	13
07:30	1	11	3	0	1	2	0	1	4	0	0	0	0	0	23
07:45	3	13	3	0	0	3	0	1	3	1	0	0	0	0	27
	4	36	7	0	1	6	0	2	19	1	0	0	1	0	77
08:00	1	10	6	0	0	1	0	0	5	1	0	0	0	0	24
08:15	0	6	3	0	2	0	0	1	7	0	0	0	0	0	19
08:30	0	5	1	0	0	0	0	3	6	1	0	0	1	0	17
08:45	0	7	1	0	0	2	0	1	3	1	1	0	0	0	16
	1	28	11	0	2	3	0	5	21	3	1	0	1	0	76
09:00	0	8	1	0	1	0	0	1	5	0	1	0	0	0	17
09:15	3	6	6	0	1	2	1	2	10	0	1	0	0	0	32
09:30	2	7	4	0	2	1	1	1	6	0	0	0	0	0	24
09:45	0	9	4	0	2	2	0	0	9	0	0	0	0	0	26
	5	30	15	0	6	5	2	4	30	0	2	0	0	0	99
10:00	2	5	1	0	0	3	0	0	8	0	0	1	0	0	20
10:15	4	7	2	1	1	4	0	0	7	1	0	0	0	0	27
10:30	0	11	0	0	0	2	0	0	6	0	0	0	0	0	19
10:45	1	13	3	0	1	1	1	0	6	1	0	1	0	0	28
	7	36	6	1	2	10	1	0	27	2	0	2	0	0	94
11:00	1	4	2	1	1	1	0	0	6	0	0	0	0	0	16
11:15	2	8	3	0	0	1	0	0	7	0	0	0	0	0	21
11:30	0	11	5	0	1	1	0	1	3	1	0	0	0	0	23
11:45	1	6	2	1	2	1	0	0	5	1	0	0	0	0	19
	4	29	12	2	4	4	0	1	21	2	0	0	0	0	79
Total	37	236	69	3	17	45	4	19	213	9	5	3	2	0	662
Percent	5.6%	35.6%	10.4%	0.5%	2.6%	6.8%	0.6%	2.9%	32.2%	1.4%	0.8%	0.5%	0.3%	0.0%	

Reliable Traffic Data Services, LLC

Tel: (770) 578-8158 Fax: (770) 578-8159
info@reliabletraffic.org | www.reliabletraffic.org

Classification Data

Site Code: 39300102
Bellville Rd East of
I-75 NB Ramp

Westbound

Start Time	Class 1	Class 2	Class 3	Class 4	Class 5	Class 6	Class 7	Class 8	Class 9	Class 10	Class 11	Class 12	Class 13	Class 14	Total
12 PM	2	9	1	0	0	5	0	1	6	0	0	0	0	0	24
12:15	2	12	6	0	3	3	0	0	6	1	0	0	0	0	33
12:30	2	14	0	0	1	2	2	1	4	1	0	0	1	0	28
12:45	4	11	7	0	0	1	1	0	5	0	0	0	0	0	29
	10	46	14	0	4	11	3	2	21	2	0	0	1	0	114
13:00	5	12	4	0	1	2	0	0	4	0	0	0	0	0	28
13:15	2	18	3	0	0	0	0	2	4	0	0	0	0	0	29
13:30	2	12	3	0	0	4	0	0	14	1	0	0	0	0	36
13:45	0	9	4	0	0	2	0	0	6	1	0	0	0	0	22
	9	51	14	0	1	8	0	2	28	2	0	0	0	0	115
14:00	2	11	3	1	0	1	2	0	9	0	0	0	0	0	29
14:15	2	9	3	0	2	2	0	1	11	2	0	0	0	0	32
14:30	1	14	6	0	1	2	0	2	9	0	0	0	0	0	35
14:45	2	11	5	0	0	3	0	0	10	1	0	0	0	0	32
	7	45	17	1	3	8	2	3	39	3	0	0	0	0	128
15:00	1	11	4	0	1	0	1	1	6	2	0	0	0	0	27
15:15	1	16	6	0	0	1	0	0	9	1	0	0	0	0	34
15:30	0	5	4	0	0	0	0	0	8	0	0	0	0	0	17
15:45	0	14	2	0	2	0	0	0	15	2	0	0	0	0	35
	2	46	16	0	3	1	1	1	38	5	0	0	0	0	113
16:00	0	15	7	0	0	3	0	0	16	1	0	0	0	0	42
16:15	0	9	3	0	1	1	0	1	4	0	0	1	0	0	20
16:30	0	15	3	0	2	1	0	0	13	0	0	0	1	0	35
16:45	0	11	6	0	1	4	0	1	10	1	0	0	0	0	34
	0	50	19	0	4	9	0	2	43	2	0	1	1	0	131
17:00	0	17	6	0	0	0	0	0	12	0	0	0	0	0	35
17:15	1	10	3	0	0	1	0	0	6	0	0	0	0	0	21
17:30	2	15	3	0	0	4	0	1	8	0	0	0	0	0	33
17:45	0	10	5	1	1	0	0	1	8	1	0	0	0	0	27
	3	52	17	1	1	5	0	2	34	1	0	0	0	0	116
18:00	0	11	3	0	1	0	0	1	7	0	0	0	0	0	23
18:15	0	11	4	0	0	1	0	0	13	1	0	0	0	0	30
18:30	1	12	0	0	0	4	0	0	6	0	0	0	0	0	23
18:45	0	9	4	0	0	2	0	0	8	0	1	0	0	0	24
	1	43	11	0	1	7	0	1	34	1	1	0	0	0	100
19:00	0	11	3	0	0	1	0	0	10	0	0	0	0	0	25
19:15	1	7	4	0	0	2	0	0	15	0	0	0	0	0	29
19:30	0	8	3	0	0	0	0	1	14	0	0	0	0	0	26
19:45	0	4	2	0	1	0	0	0	17	0	0	0	0	0	24
	1	30	12	0	1	3	0	1	56	0	0	0	0	0	104
20:00	1	8	1	0	0	2	0	1	7	0	0	0	0	0	20
20:15	0	7	1	0	0	0	0	1	9	1	0	0	0	0	19
20:30	0	7	2	0	0	0	0	0	9	0	0	0	0	0	18
20:45	1	3	4	0	0	3	0	1	10	0	0	0	1	0	23
	2	25	8	0	0	5	0	3	35	1	0	0	1	0	80
21:00	0	4	2	0	0	0	0	1	4	0	0	0	0	0	11
21:15	1	10	3	0	0	1	0	0	8	0	0	0	0	0	23
21:30	0	1	0	0	0	0	0	0	7	0	0	0	0	0	8
21:45	0	1	2	1	0	0	0	0	14	0	0	0	0	0	18
	1	16	7	1	0	1	0	1	33	0	0	0	0	0	60
22:00	0	3	0	0	1	0	0	0	6	0	0	0	0	0	10
22:15	1	5	4	0	0	1	0	0	9	0	0	0	0	0	20
22:30	1	3	0	0	0	1	0	1	7	1	0	0	0	0	14
22:45	0	2	0	1	0	0	0	0	5	0	0	0	0	0	8
	2	13	4	1	1	2	0	1	27	1	0	0	0	0	52
23:00	0	6	0	0	0	0	0	0	10	0	0	0	0	0	16
23:15	0	2	3	0	0	0	0	0	3	0	0	2	0	0	10
23:30	0	2	0	0	0	1	0	0	3	0	0	0	0	0	6
23:45	0	2	1	0	0	1	0	1	5	0	1	0	0	0	11
	0	12	4	0	0	2	0	1	21	0	1	2	0	0	43
Total	38	429	143	4	19	62	6	20	409	18	2	3	3	0	1156
Percent	3.3%	37.1%	12.4%	0.3%	1.6%	5.4%	0.5%	1.7%	35.4%	1.6%	0.2%	0.3%	0.3%	0.0%	

Reliable Traffic Data Services, LLC

Tel: (770) 578-8158 Fax: (770) 578-8159
info@reliabletraffic.org | www.reliabletraffic.org

Classification Data

Site Code: 39300102
Bellville Rd East of
I-75 NB Ramp

Westbound

Start Time	Class 1	Class 2	Class 3	Class 4	Class 5	Class 6	Class 7	Class 8	Class 9	Class 10	Class 11	Class 12	Class 13	Class 14	Total
10/26/16	0	2	1	0	0	0	0	2	4	0	0	0	0	0	9
00:15	0	6	0	0	0	0	0	0	2	0	0	0	0	0	8
00:30	1	3	0	0	1	1	0	0	4	0	1	0	0	0	11
00:45	0	1	0	0	0	1	0	0	2	0	0	0	0	0	4
	1	12	1	0	1	2	0	2	12	0	1	0	0	0	32
01:00	0	1	0	0	0	0	0	0	3	0	0	0	0	0	4
01:15	0	1	0	1	0	0	0	1	1	0	0	0	0	0	4
01:30	0	0	0	0	0	0	0	0	3	0	0	0	0	0	3
01:45	0	1	1	0	0	0	0	0	1	0	0	0	0	0	3
	0	3	1	1	0	0	0	1	8	0	0	0	0	0	14
02:00	0	1	0	0	0	0	0	0	2	0	1	0	0	0	4
02:15	0	1	1	0	0	0	0	0	2	0	0	0	0	0	4
02:30	1	1	1	1	0	1	0	0	1	0	0	0	0	0	6
02:45	2	2	0	0	0	2	0	0	1	0	0	1	0	0	8
	3	5	2	1	0	3	0	0	6	0	1	1	0	0	22
03:00	0	4	0	0	0	0	0	0	4	0	0	0	0	0	8
03:15	0	1	0	0	0	1	0	0	3	0	0	0	0	0	5
03:30	0	5	2	0	0	1	0	0	2	0	0	0	0	0	10
03:45	0	5	0	0	0	0	0	0	0	0	0	0	0	0	5
	0	15	2	0	0	2	0	0	9	0	0	0	0	0	28
04:00	0	2	0	0	0	0	0	0	0	0	0	0	0	0	2
04:15	0	1	0	0	0	0	0	0	6	0	0	0	0	0	7
04:30	2	3	0	0	0	2	0	0	10	0	0	0	0	0	17
04:45	0	2	0	0	0	0	0	0	3	0	0	0	0	0	5
	2	8	0	0	0	2	0	0	19	0	0	0	0	0	31
05:00	0	2	0	0	0	0	0	0	3	0	0	0	0	0	5
05:15	1	1	1	0	0	2	0	0	3	0	0	0	0	0	8
05:30	1	2	2	0	0	1	0	1	4	0	0	0	0	0	11
05:45	0	7	1	1	0	0	0	0	4	0	0	0	0	0	13
	2	12	4	1	0	3	0	1	14	0	0	0	0	0	37
06:00	0	3	3	0	1	1	0	0	5	0	0	0	0	0	13
06:15	0	6	1	0	0	1	0	0	5	0	0	1	0	0	14
06:30	1	5	4	0	0	2	0	1	5	0	0	0	0	0	18
06:45	0	5	0	0	0	0	1	1	3	0	0	0	0	0	10
	1	19	8	0	1	4	1	2	18	0	0	1	0	0	55
07:00	0	8	3	0	1	0	0	0	6	0	0	0	0	0	18
07:15	1	5	1	0	0	1	0	0	6	0	0	0	0	0	14
07:30	0	12	3	0	1	0	0	1	8	0	0	0	0	0	25
07:45	0	14	3	0	1	2	0	0	6	0	0	1	0	0	27
	1	39	10	0	3	3	0	1	26	0	0	1	0	0	84
08:00	1	8	2	0	0	3	0	0	9	0	0	1	0	0	24
08:15	0	5	4	0	1	0	0	3	7	0	0	0	0	0	20
08:30	2	6	1	0	0	1	0	4	8	0	0	0	0	0	22
08:45	0	6	6	0	0	1	0	1	5	0	0	0	0	0	19
	3	25	13	0	1	5	0	8	29	0	0	1	0	0	85
09:00	0	6	1	0	1	1	0	0	9	1	1	0	0	0	20
09:15	0	8	1	0	0	0	0	0	7	0	1	0	0	0	17
09:30	0	7	3	0	0	1	0	1	9	1	0	0	0	0	22
09:45	0	9	1	0	0	1	0	2	11	0	0	0	0	0	24
	0	30	6	0	1	3	0	3	36	2	2	0	0	0	83
10:00	0	4	3	0	0	1	0	0	10	0	0	0	0	0	18
10:15	1	6	1	1	0	0	0	0	6	0	0	0	0	0	15
10:30	0	15	2	0	2	1	0	0	5	0	0	0	0	0	25
10:45	1	5	5	0	0	2	0	1	9	0	0	0	0	0	23
	2	30	11	1	2	4	0	1	30	0	0	0	0	0	81
11:00	0	10	3	0	1	1	0	3	7	0	0	0	0	0	25
11:15	0	11	3	0	1	1	0	1	9	1	0	0	0	0	27
11:30	0	8	2	1	0	0	0	0	7	0	0	0	1	0	19
11:45	0	14	2	1	1	0	0	1	12	1	0	0	0	0	32
	0	43	10	2	3	2	0	5	35	2	0	0	1	0	103
Total	15	241	68	6	12	33	1	24	242	4	4	4	1	0	655
Percent	2.3%	36.8%	10.4%	0.9%	1.8%	5.0%	0.2%	3.7%	36.9%	0.6%	0.6%	0.6%	0.2%	0.0%	

Reliable Traffic Data Services, LLC

Tel: (770) 578-8158 Fax: (770) 578-8159
info@reliabletraffic.org | www.reliabletraffic.org

Classification Data

Site Code: 39300102
Bellville Rd East of
I-75 NB Ramp

Westbound

Start Time	Class 1	Class 2	Class 3	Class 4	Class 5	Class 6	Class 7	Class 8	Class 9	Class 10	Class 11	Class 12	Class 13	Class 14	Total
12 PM	0	10	4	0	1	0	0	0	6	1	0	0	0	0	22
12:15	0	12	2	0	0	0	1	1	9	1	0	0	0	0	26
12:30	0	14	2	0	0	1	0	0	9	0	0	0	0	0	26
12:45	2	13	3	0	1	2	0	0	9	0	0	0	0	0	30
	2	49	11	0	2	3	1	1	33	2	0	0	0	0	104
13:00	0	18	1	0	0	0	0	0	11	0	0	1	0	0	31
13:15	1	11	0	0	0	0	0	0	10	1	0	0	0	0	23
13:30	0	13	6	0	1	2	0	1	8	0	0	0	0	0	31
13:45	0	8	7	0	0	1	0	2	9	0	0	0	0	0	27
	1	50	14	0	1	3	0	3	38	1	0	1	0	0	112
14:00	0	10	3	0	1	0	0	0	7	1	0	0	0	0	22
14:15	0	7	4	1	0	1	0	0	13	1	0	0	0	0	27
14:30	1	18	9	0	2	2	0	0	10	0	0	0	0	0	42
14:45	3	8	5	0	1	1	0	1	18	1	0	0	0	0	38
	4	43	21	1	4	4	0	1	48	3	0	0	0	0	129
15:00	1	15	3	0	1	1	1	3	11	0	0	0	0	0	36
15:15	1	18	2	0	1	1	0	0	14	0	0	0	0	0	37
15:30	0	14	0	0	1	0	0	0	11	0	0	0	0	0	26
15:45	0	7	3	1	1	2	0	0	12	0	0	0	0	0	26
	2	54	8	1	4	4	1	3	48	0	0	0	0	0	125
16:00	2	10	2	0	1	3	0	1	9	0	0	1	0	0	29
16:15	0	18	3	0	0	1	0	1	16	0	0	0	0	0	39
16:30	0	18	5	0	2	1	0	1	14	0	1	0	0	0	42
16:45	1	6	6	0	1	3	0	0	11	2	0	0	0	0	30
	3	52	16	0	4	8	0	3	50	2	1	1	0	0	140
17:00	2	16	4	0	0	2	0	0	10	1	0	0	0	0	35
17:15	0	10	1	0	2	2	0	0	12	0	0	0	0	0	27
17:30	1	17	8	0	0	0	2	1	8	1	0	0	0	0	38
17:45	0	18	4	0	0	0	0	1	11	0	0	0	0	0	34
	3	61	17	0	2	4	2	2	41	2	0	0	0	0	134
18:00	0	7	6	1	1	1	0	0	7	0	0	0	0	0	23
18:15	1	11	2	0	1	1	0	1	10	0	0	0	0	0	27
18:30	0	8	4	0	0	0	0	0	12	0	0	0	0	0	24
18:45	0	7	6	0	0	1	0	0	6	0	0	0	0	0	20
	1	33	18	1	2	3	0	1	35	0	0	0	0	0	94
19:00	0	6	3	0	2	2	0	1	11	0	0	0	0	0	25
19:15	0	9	3	0	0	2	0	0	15	0	0	0	0	0	29
19:30	0	7	1	0	1	0	0	0	14	1	0	0	0	0	24
19:45	0	4	1	0	0	2	0	0	11	0	0	0	0	0	18
	0	26	8	0	3	6	0	1	51	1	0	0	0	0	96
20:00	0	9	3	0	0	0	0	1	10	0	0	0	0	0	23
20:15	0	8	1	0	0	0	0	3	8	0	0	0	0	0	20
20:30	0	4	2	0	0	0	0	0	6	0	0	0	0	0	12
20:45	1	5	4	0	0	5	0	3	9	0	0	0	1	0	28
	1	26	10	0	0	5	0	7	33	0	0	0	1	0	83
21:00	0	2	3	0	0	0	0	1	3	0	0	0	0	0	9
21:15	3	4	2	0	0	0	0	0	6	0	0	0	0	0	15
21:30	0	3	0	0	0	0	0	0	5	0	0	0	0	0	8
21:45	0	1	1	3	0	0	0	0	11	0	0	0	0	0	16
	3	10	6	3	0	0	0	1	25	0	0	0	0	0	48
22:00	0	2	0	0	3	0	0	0	5	0	0	0	0	0	10
22:15	2	3	3	0	0	1	0	0	6	0	0	0	0	0	15
22:30	1	2	0	0	0	0	0	0	3	1	0	0	0	0	7
22:45	0	2	0	0	0	0	0	0	4	0	0	0	0	0	6
	3	9	3	0	3	1	0	0	18	1	0	0	0	0	38
23:00	0	6	1	0	1	0	0	0	9	1	0	0	0	0	18
23:15	0	6	1	0	1	1	0	0	6	0	1	0	0	0	16
23:30	1	4	0	0	0	0	0	0	3	1	0	0	0	0	9
23:45	1	1	2	0	0	2	0	0	6	0	0	0	0	0	12
	2	17	4	0	2	3	0	0	24	2	1	0	0	0	55
Total	25	430	136	6	27	44	4	23	444	14	2	2	1	0	1158
Percent	2.2%	37.1%	11.7%	0.5%	2.3%	3.8%	0.3%	2.0%	38.3%	1.2%	0.2%	0.2%	0.1%	0.0%	
Grand Total	115	1336	416	19	75	184	15	86	1308	45	13	12	7	0	3631
Percent	3.2%	36.8%	11.5%	0.5%	2.1%	5.1%	0.4%	2.4%	36.0%	1.2%	0.4%	0.3%	0.2%	0.0%	

Appendix D. Traffic Diagrams

SUBMITTED SEPARATELY

Appendix E. Build 2022 Warrant Analysis Sheets (100% Standard)

JACOBS ENGINEERING

SIGNAL WARRANT ANALYSIS SUMMARY REPORT:
Bellville Rd @ I-75 NB Ramp
2022 Build

Project Number :	CB506050	Report Date :	November 28, 2016
Analyst :	GKW	Counts Date :	Fall 2016
Major Street :	Bellville Rd		
Minor Street :	I-75 NB Ramp		
Speed on Major Street :	45		
Lanes @ Intersection :	Major Street - 1		
	Minor Street - 1		

WARRANT 1, EIGHT-HOUR VEHICULAR VOLUME **100% Thresholds**

WARRANT 1	**NOT SATISFIED**				
	STANDARD 1	**NOT SATISFIED**	CONDITION A	0	HOURS
			CONDITION B	0	HOURS
	STANDARD 2	**NOT SATISFIED**	CONDITION A	0	HOURS
			CONDITION B	0	HOURS

WARRANT 2, FOUR-HOUR VEHICULAR VOLUME **100% Thresholds**

WARRANT 2	**NOT SATISFIED**	0	HOURS

WARRANT 3, PEAK HOUR VEHICULAR VOLUME **100% Thresholds**

WARRANT 3	**NOT SATISFIED**		
	STANDARD A	**NOT EVALUATED**	0	VEHICLE HOURS
	STANDARD B	**NOT SATISFIED**	0	HOURS

WARRANT 4, PEDESTRIAN VOLUME **100% Thresholds**

WARRANT 4	**NOT EVALUATED**		
	STANDARD A	**NOT SATISFIED**	0	HOURS
	STANDARD B	**NOT SATISFIED**	0	HOURS

WARRANT 5, SCHOOL CROSSING

WARRANT 5 **NOT EVALUATED**

WARRANT 6, COORDINATED SIGNAL SYSTEM

WARRANT 6 **NOT EVALUATED**

WARRANT 7, CRASH EXPERIENCE

WARRANT 7 **NOT EVALUATED**

WARRANT 8, ROADWAY NETWORK

WARRANT 8 **NOT EVALUATED**

WARRANT 9, INTERSECTION NEAR A GRADE CROSSING

WARRANT 9 **NOT EVALUATED**

JACOBS ENGINEERING

SIGNAL WARRANT ANALYSIS SUMMARY REPORT:
Bellville Rd @ I-75 NB Ramp
2022 Build

Analyst :	GKW	Report Date :	November 28, 2016
Major Street :	Bellville Rd	Counts Date :	Fall 2016
Minor Street :	I-75 NB Ramp	Lanes @ Intersection :	Major Street - 1
Speed on Major Street :	45		Minor Street - 1

24-HOUR TRAFFIC VOLUME

TABLE 1

Time	Minor Street Northbound				Minor Street Southbound			
24 Hours	Total Approach Volume	Right Turn	% Right Turn	With 0 % RT Turn Reduction	Total Approach Volume	Right Turn	% Right Turn	With 0% RT Turn Reduction
12:00 AM	45	20	44	45	0	0	0	0
1:00 AM	35	15	43	35	0	0	0	0
2:00 AM	25	10	40	25	0	0	0	0
3:00 AM	20	10	50	20	0	0	0	0
4:00 AM	20	10	50	20	0	0	0	0
5:00 AM	50	20	40	50	0	0	0	0
6:00 AM	35	15	43	35	0	0	0	0
7:00 AM	70	30	43	70	0	0	0	0
8:00 AM	70	30	43	70	0	0	0	0
9:00 AM	75	30	40	75	0	0	0	0
10:00 AM	80	35	44	80	0	0	0	0
11:00 AM	105	45	43	105	0	0	0	0
12:00 PM	115	50	43	115	0	0	0	0
1:00 PM	115	50	43	115	0	0	0	0
2:00 PM	115	50	43	115	0	0	0	0
3:00 PM	125	55	44	125	0	0	0	0
4:00 PM	115	50	43	115	0	0	0	0
5:00 PM	130	55	42	130	0	0	0	0
6:00 PM	125	55	44	125	0	0	0	0
7:00 PM	95	40	42	95	0	0	0	0
8:00 PM	105	45	43	105	0	0	0	0
9:00 PM	75	30	40	75	0	0	0	0
10:00 PM	45	20	44	45	0	0	0	0
11:00 PM	45	20	44	45	0	0	0	0
Total				1835				0

JACOBS ENGINEERING

24-HOUR TRAFFIC VOLUME

TABLE 2

Time	Major Street				Major Street			
	Eastbound				Westbound			
24 Hours	Total Approach Volume	Right Turn	% Right Turn	With 0% RT Turn Reduction	Total Approach Volume	Right Turn	% Right Turn	With 0% RT Turn Reduction
12:00 AM	50	0	0	50	30	15	50	30
1:00 AM	40	0	0	40	25	10	40	25
2:00 AM	30	0	0	30	20	10	50	20
3:00 AM	40	0	0	40	30	15	50	30
4:00 AM	45	0	0	45	30	15	50	30
5:00 AM	50	0	0	50	40	20	50	40
6:00 AM	75	0	0	75	60	30	50	60
7:00 AM	85	0	0	85	85	40	47	85
8:00 AM	115	0	0	115	85	40	47	85
9:00 AM	105	0	0	105	95	45	47	95
10:00 AM	130	0	0	130	90	45	50	90
11:00 AM	150	0	0	150	95	45	47	95
12:00 PM	165	0	0	165	115	55	48	115
1:00 PM	150	0	0	150	115	55	48	115
2:00 PM	145	0	0	145	135	65	48	135
3:00 PM	160	0	0	160	125	60	48	125
4:00 PM	150	0	0	150	145	70	48	145
5:00 PM	155	0	0	155	135	65	48	135
6:00 PM	150	0	0	150	105	50	48	105
7:00 PM	130	0	0	130	110	55	50	110
8:00 PM	95	0	0	95	90	45	50	90
9:00 PM	95	0	0	95	60	30	50	60
10:00 PM	75	0	0	75	45	20	44	45
11:00 PM	60	0	0	60	50	25	50	50
Total				2445				1915

JACOBS ENGINEERING

WARRANT ANALYSIS RESULTS - Bellville Rd @ I-75 NB Ramp

WARRANT 1 - EIGHT-HOUR VEHICULAR VOLUME (100% Thresholds)

WARRANT 1* NOT SATISFIED

STANDARD 1	NOT SATISFIED	CONDITION A	0	HOURS
		CONDITION B	0	HOURS
STANDARD 2	NOT SATISFIED	CONDITION A	0	HOURS
		CONDITION B	0	HOURS

24-HOUR TRAFFIC VOLUME EVALUATION

TABLE 3

HOUR OF DAY	MAJOR ST TOTAL OF BOTH APPROACHES	MINOR ST HIGH VOLUME APPROACH	WARRANT 1			
			STANDARD 1		STANDARD 2	
			CONDITION A	CONDITION B	CONDITION A	CONDITION B
12:00 AM	80	45	0	0	0	0
1:00 AM	65	35	0	0	0	0
2:00 AM	50	25	0	0	0	0
3:00 AM	70	20	0	0	0	0
4:00 AM	75	20	0	0	0	0
5:00 AM	90	50	0	0	0	0
6:00 AM	135	35	0	0	0	0
7:00 AM	170	70	0	0	0	MINOR
8:00 AM	200	70	0	0	0	MINOR
9:00 AM	200	75	0	MINOR	0	MINOR
10:00 AM	220	80	0	MINOR	0	MINOR
11:00 AM	245	105	0	MINOR	0	MINOR
12:00 PM	280	115	0	MINOR	0	MINOR
1:00 PM	265	115	0	MINOR	0	MINOR
2:00 PM	280	115	0	MINOR	0	MINOR
3:00 PM	285	125	0	MINOR	MINOR	MINOR
4:00 PM	295	115	0	MINOR	0	MINOR
5:00 PM	290	130	0	MINOR	MINOR	MINOR
6:00 PM	255	125	0	MINOR	MINOR	MINOR
7:00 PM	240	95	0	MINOR	0	MINOR
8:00 PM	185	105	0	MINOR	0	MINOR
9:00 PM	155	75	0	MINOR	0	MINOR
10:00 PM	120	45	0	0	0	0
11:00 PM	110	45	0	0	0	0
TOTAL	4360	1835				

CRITERIA**		STANDARD 1 - 100%		STANDARD 2 - 80%	
		CONDITION A	CONDITION B	CONDITION A	CONDITION B
	MAJOR ST	500	750	400	600
	MINOR ST	150	75	120	60
NO. OF HOURS MET		0	0	0	0

JACOBS ENGINEERING

WARRANT 2, FOUR-HOUR VEHICULAR VOLUME **(100% Thresholds)**

WARRANT 2* NOT SATISFIED 0 HOURS

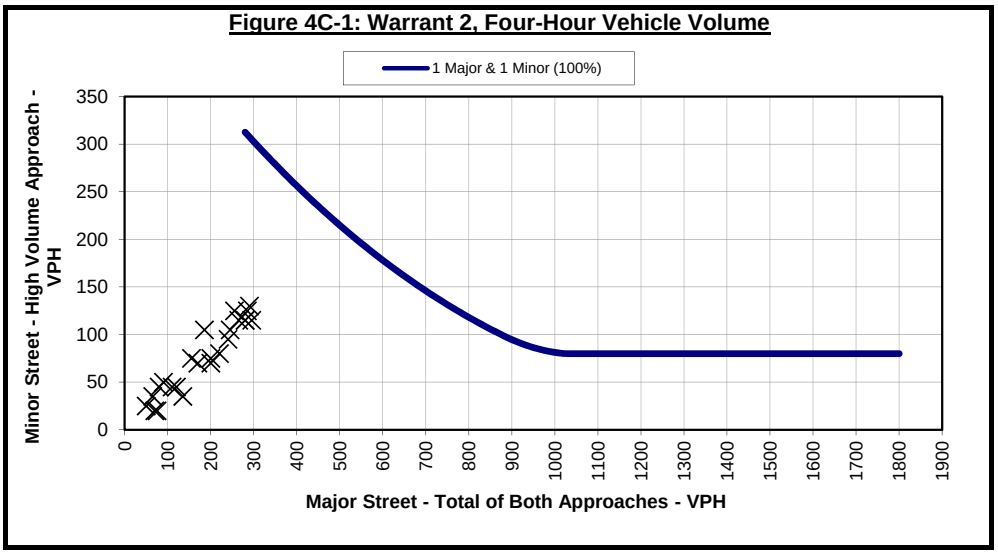

*Note: Curves for minimum volumes are based on the curves from FIGURES 4C-1 & 4C-2, MUTCD Section 4C.04

WARRANT 3, PEAK HOUR **(100% Thresholds)**

STANDARD A NOT EVALUATED 0 VEHICLE HOURS

0	Peak Hour Minor-Street Volume
0	Average Minor-Street Delay (seconds)
1	Number of Approach Lanes (Minor Street)

STANDARD B* NOT SATISFIED 0 HOURS

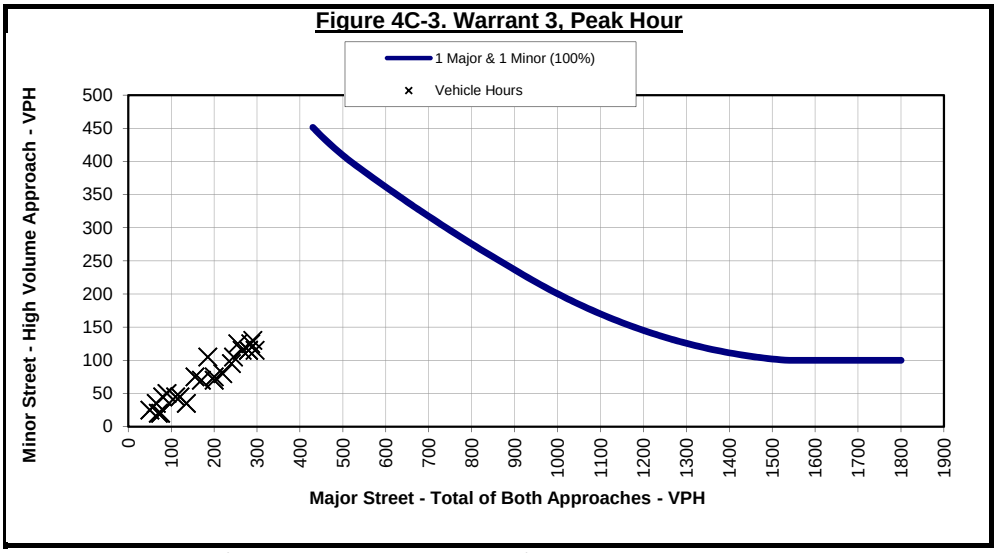

*Note: Curves for minimum volumes are based on the curves from FIGURES 4C-3 & 4C-4, MUTCD Section 4C.04

JACOBS ENGINEERING

WARRANT 4, PEDESTRIAN VOLUME **(100% Thresholds)**

WARRANT 4	NOT EVALUATED			
	STANDARD A	NOT SATISFIED	0	HOURS
	STANDARD B	NOT SATISFIED	0	HOURS

WARRANT 5, SCHOOL CROSSING

WARRANT 5 NOT EVALUATED

WARRANT 6, COORDINATED SIGNAL SYSTEM

WARRANT 6 NOT EVALUATED

WARRANT 7, CRASH EXPERIENCE

WARRANT 7 NOT EVALUATED

WARRANT 8, ROADWAY NETWORK

WARRANT 8 NOT EVALUATED

WARRANT 9, INTERSECTION NEAR A GRADE CROSSING

WARRANT 9 NOT EVALUATED

JACOBS ENGINEERING

SIGNAL WARRANT ANALYSIS SUMMARY REPORT:
Bellville Rd @ I-75 NB Ramp
2022 Build

Project Number :	CB506050	Report Date :	November 28, 2016
Analyst :	GKW	Counts Date :	Fall 2016
Major Street :	Bellville Rd		
Minor Street :	I-75 NB Ramp		
Speed on Major Street :	45		
Lanes @ Intersection :	Major Street - 1		
	Minor Street - 1		

WARRANT 1, EIGHT-HOUR VEHICULAR VOLUME **100% Thresholds**

WARRANT 1	**NOT SATISFIED**				
	STANDARD 1	**NOT SATISFIED**	CONDITION A	0	HOURS
			CONDITION B	0	HOURS
	STANDARD 2	**NOT SATISFIED**	CONDITION A	6	HOURS
			CONDITION B	0	HOURS

WARRANT 2, FOUR-HOUR VEHICULAR VOLUME **100% Thresholds**

WARRANT 2	**NOT SATISFIED**	0	HOURS

WARRANT 3, PEAK HOUR VEHICULAR VOLUME **100% Thresholds**

WARRANT 3	**NOT SATISFIED**		
	STANDARD A	**NOT EVALUATED**	0	VEHICLE HOURS
	STANDARD B	**NOT SATISFIED**	0	HOURS

WARRANT 4, PEDESTRIAN VOLUME **100% Thresholds**

WARRANT 4	**NOT EVALUATED**		
	STANDARD A	**NOT SATISFIED**	0	HOURS
	STANDARD B	**NOT SATISFIED**	0	HOURS

WARRANT 5, SCHOOL CROSSING

WARRANT 5 **NOT EVALUATED**

WARRANT 6, COORDINATED SIGNAL SYSTEM

WARRANT 6 **NOT EVALUATED**

WARRANT 7, CRASH EXPERIENCE

WARRANT 7 **NOT EVALUATED**

WARRANT 8, ROADWAY NETWORK

WARRANT 8 **NOT EVALUATED**

WARRANT 9, INTERSECTION NEAR A GRADE CROSSING

WARRANT 9 **NOT EVALUATED**

JACOBS ENGINEERING

SIGNAL WARRANT ANALYSIS SUMMARY REPORT:
Bellville Rd @ I-75 NB Ramp
2022 Build

Analyst :	GKW	Report Date :	November 28, 2016
Major Street :	Bellville Rd	Counts Date :	Fall 2016
Minor Street :	I-75 NB Ramp	Lanes @ Intersection :	Major Street - 1
Speed on Major Street :	45		Minor Street - 1

24-HOUR TRAFFIC VOLUME

TABLE 1

Time	Minor Street				Minor Street			
	Northbound				Southbound			
24 Hours	Total Approach Volume	Right Turn	% Right Turn	With 0 % RT Turn Reduction	Total Approach Volume	Right Turn	% Right Turn	With 0% RT Turn Reduction
12:00 AM	65	30	46	65	0	0	0	0
1:00 AM	50	20	40	50	0	0	0	0
2:00 AM	35	15	43	35	0	0	0	0
3:00 AM	30	15	50	30	0	0	0	0
4:00 AM	30	15	50	30	0	0	0	0
5:00 AM	75	30	40	75	0	0	0	0
6:00 AM	50	20	40	50	0	0	0	0
7:00 AM	105	45	43	105	0	0	0	0
8:00 AM	105	45	43	105	0	0	0	0
9:00 AM	110	45	41	110	0	0	0	0
10:00 AM	115	50	43	115	0	0	0	0
11:00 AM	150	65	43	150	0	0	0	0
12:00 PM	170	75	44	170	0	0	0	0
1:00 PM	170	75	44	170	0	0	0	0
2:00 PM	170	75	44	170	0	0	0	0
3:00 PM	180	80	44	180	0	0	0	0
4:00 PM	170	75	44	170	0	0	0	0
5:00 PM	190	80	42	190	0	0	0	0
6:00 PM	180	80	44	180	0	0	0	0
7:00 PM	140	60	43	140	0	0	0	0
8:00 PM	150	65	43	150	0	0	0	0
9:00 PM	110	45	41	110	0	0	0	0
10:00 PM	65	30	46	65	0	0	0	0
11:00 PM	65	30	46	65	0	0	0	0
Total				2680				0

JACOBS ENGINEERING

24-HOUR TRAFFIC VOLUME

TABLE 2

Time	Major Street				Major Street			
	Eastbound				Westbound			
24 Hours	Total Approach Volume	Right Turn	% Right Turn	With 0% RT Turn Reduction	Total Approach Volume	Right Turn	% Right Turn	With 0% RT Turn Reduction
12:00 AM	70	0	0	70	50	25	50	50
1:00 AM	60	0	0	60	40	15	38	40
2:00 AM	40	0	0	40	30	15	50	30
3:00 AM	60	0	0	60	50	25	50	50
4:00 AM	65	0	0	65	50	25	50	50
5:00 AM	70	0	0	70	60	30	50	60
6:00 AM	110	0	0	110	100	50	50	100
7:00 AM	125	0	0	125	135	65	48	135
8:00 AM	170	0	0	170	135	65	48	135
9:00 AM	155	0	0	155	150	70	47	150
10:00 AM	195	0	0	195	140	70	50	140
11:00 AM	225	0	0	225	150	70	47	150
12:00 PM	245	0	0	245	180	85	47	180
1:00 PM	225	0	0	225	180	85	47	180
2:00 PM	215	0	0	215	215	105	49	215
3:00 PM	235	0	0	235	200	95	48	200
4:00 PM	225	0	0	225	230	110	48	230
5:00 PM	230	0	0	230	215	105	49	215
6:00 PM	225	0	0	225	165	80	48	165
7:00 PM	195	0	0	195	170	85	50	170
8:00 PM	140	0	0	140	140	70	50	140
9:00 PM	140	0	0	140	100	50	50	100
10:00 PM	110	0	0	110	70	30	43	70
11:00 PM	90	0	0	90	80	40	50	80
Total				3620				3035

JACOBS ENGINEERING

WARRANT ANALYSIS RESULTS - Bellville Rd @ I-75 NB Ramp

WARRANT 1 - EIGHT-HOUR VEHICULAR VOLUME (100% Thresholds)

WARRANT 1* NOT SATISFIED

STANDARD 1	NOT SATISFIED	CONDITION A	0	HOURS
		CONDITION B	0	HOURS
STANDARD 2	NOT SATISFIED	CONDITION A	6	HOURS
		CONDITION B	0	HOURS

24-HOUR TRAFFIC VOLUME EVALUATION

TABLE 3

HOUR OF DAY	MAJOR ST TOTAL OF BOTH APPROACHES	MINOR ST HIGH VOLUME APPROACH	WARRANT 1			
			STANDARD 1		STANDARD 2	
			CONDITION A	CONDITION B	CONDITION A	CONDITION B
12:00 AM	120	65	0	0	0	MINOR
1:00 AM	100	50	0	0	0	0
2:00 AM	70	35	0	0	0	0
3:00 AM	110	30	0	0	0	0
4:00 AM	115	30	0	0	0	0
5:00 AM	130	75	0	MINOR	0	MINOR
6:00 AM	210	50	0	0	0	0
7:00 AM	260	105	0	MINOR	0	MINOR
8:00 AM	305	105	0	MINOR	0	MINOR
9:00 AM	305	110	0	MINOR	0	MINOR
10:00 AM	335	115	0	MINOR	0	MINOR
11:00 AM	375	150	MINOR	MINOR	MINOR	MINOR
12:00 PM	425	170	MINOR	MINOR	BOTH	MINOR
1:00 PM	405	170	MINOR	MINOR	BOTH	MINOR
2:00 PM	430	170	MINOR	MINOR	BOTH	MINOR
3:00 PM	435	180	MINOR	MINOR	BOTH	MINOR
4:00 PM	455	170	MINOR	MINOR	BOTH	MINOR
5:00 PM	445	190	MINOR	MINOR	BOTH	MINOR
6:00 PM	390	180	MINOR	MINOR	MINOR	MINOR
7:00 PM	365	140	0	MINOR	MINOR	MINOR
8:00 PM	280	150	MINOR	MINOR	MINOR	MINOR
9:00 PM	240	110	0	MINOR	0	MINOR
10:00 PM	180	65	0	0	0	MINOR
11:00 PM	170	65	0	0	0	MINOR
TOTAL	6655	2680				

CRITERIA**		STANDARD 1 - 100%		STANDARD 2 - 80%	
		CONDITION A	CONDITION B	CONDITION A	CONDITION B
	MAJOR ST	500	750	400	600
	MINOR ST	150	75	120	60
NO. OF HOURS MET		0	0	6	0

JACOBS ENGINEERING

WARRANT 2, FOUR-HOUR VEHICULAR VOLUME **(100% Thresholds)**

WARRANT 2* NOT SATISFIED 0 HOURS

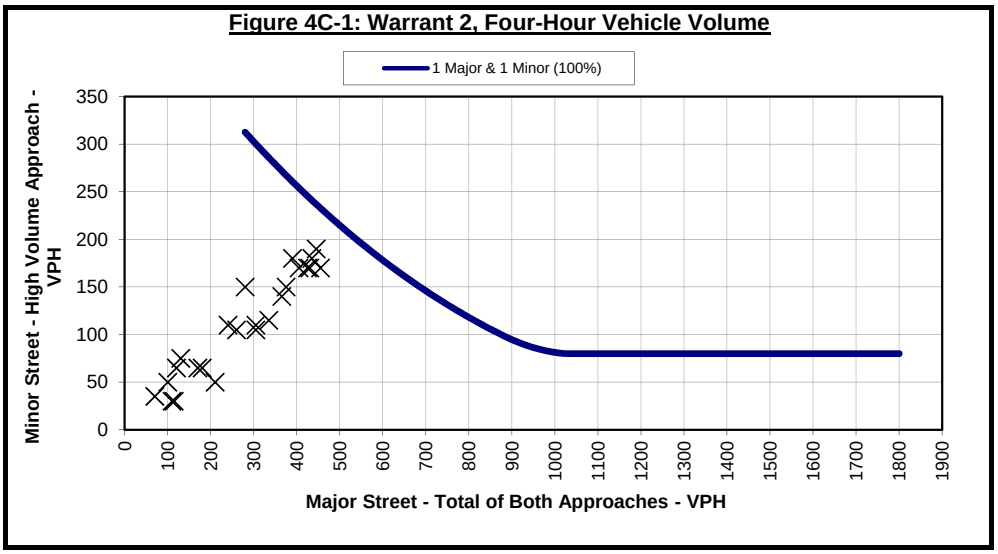

*Note: Curves for minimum volumes are based on the curves from FIGURES 4C-1 & 4C-2, MUTCD Section 4C.04

WARRANT 3, PEAK HOUR **(100% Thresholds)**

STANDARD A NOT EVALUATED 0 VEHICLE HOURS

0	Peak Hour Minor-Street Volume
0	Average Minor-Street Delay (seconds)
1	Number of Approach Lanes (Minor Street)

STANDARD B* NOT SATISFIED 0 HOURS

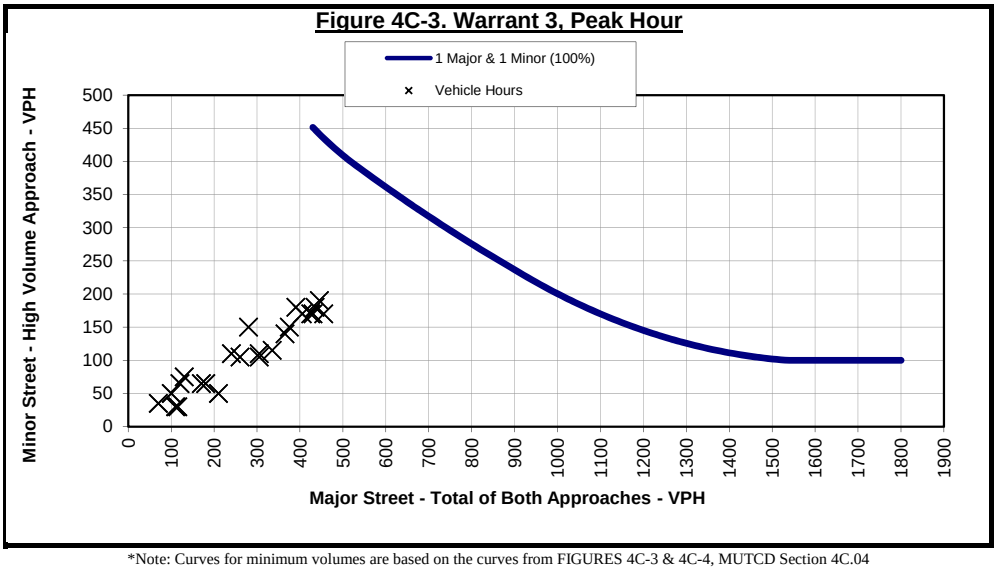

*Note: Curves for minimum volumes are based on the curves from FIGURES 4C-3 & 4C-4, MUTCD Section 4C.04

JACOBS ENGINEERING

WARRANT 4, PEDESTRIAN VOLUME **(100% Thresholds)**

WARRANT 4	NOT EVALUATED			
	STANDARD A	NOT SATISFIED	0	HOURS
	STANDARD B	NOT SATISFIED	0	HOURS

WARRANT 5, SCHOOL CROSSING

WARRANT 5 NOT EVALUATED

WARRANT 6, COORDINATED SIGNAL SYSTEM

WARRANT 6 NOT EVALUATED

WARRANT 7, CRASH EXPERIENCE

WARRANT 7 NOT EVALUATED

WARRANT 8, ROADWAY NETWORK

WARRANT 8 NOT EVALUATED

WARRANT 9, INTERSECTION NEAR A GRADE CROSSING

WARRANT 9 NOT EVALUATED

Appendix F. Build 2042 Warrant Analysis Sheets (100% Standard)

JACOBS ENGINEERING

SIGNAL WARRANT ANALYSIS SUMMARY REPORT:
Bellville Rd @ I-75 NB Ramp
2042 Build

Project Number :	CB506050	Report Date :	November 28, 2016
Analyst :	GKW	Counts Date :	Fall 2016
Major Street :	Bellville Rd		
Minor Street :	I-75 NB Ramp		
Speed on Major Street :	45		
Lanes @ Intersection :	Major Street - 1		
	Minor Street - 1		

WARRANT 1, EIGHT-HOUR VEHICULAR VOLUME **100% Thresholds**

WARRANT 1	**NOT SATISFIED**				
	STANDARD 1	**NOT SATISFIED**	CONDITION A	0	HOURS
			CONDITION B	0	HOURS
	STANDARD 2	**NOT SATISFIED**	CONDITION A	8	HOURS
			CONDITION B	0	HOURS

WARRANT 2, FOUR-HOUR VEHICULAR VOLUME **100% Thresholds**

WARRANT 2	**NOT SATISFIED**	0	HOURS

WARRANT 3, PEAK HOUR VEHICULAR VOLUME **100% Thresholds**

WARRANT 3	**NOT SATISFIED**		
	STANDARD A	**NOT EVALUATED**	0	VEHICLE HOURS
	STANDARD B	**NOT SATISFIED**	0	HOURS

WARRANT 4, PEDESTRIAN VOLUME **100% Thresholds**

WARRANT 4	**NOT EVALUATED**		
	STANDARD A	**NOT SATISFIED**	0	HOURS
	STANDARD B	**NOT SATISFIED**	0	HOURS

WARRANT 5, SCHOOL CROSSING

WARRANT 5 **NOT EVALUATED**

WARRANT 6, COORDINATED SIGNAL SYSTEM

WARRANT 6 **NOT EVALUATED**

WARRANT 7, CRASH EXPERIENCE

WARRANT 7 **NOT EVALUATED**

WARRANT 8, ROADWAY NETWORK

WARRANT 8 **NOT EVALUATED**

WARRANT 9, INTERSECTION NEAR A GRADE CROSSING

WARRANT 9 **NOT EVALUATED**

JACOBS ENGINEERING

SIGNAL WARRANT ANALYSIS SUMMARY REPORT:
Bellville Rd @ I-75 NB Ramp
2042 Build

Analyst :	GKW	Report Date :	November 28, 2016
Major Street :	Bellville Rd	Counts Date :	Fall 2016
Minor Street :	I-75 NB Ramp	Lanes @ Intersection :	Major Street - 1
Speed on Major Street :	45		Minor Street - 1

24-HOUR TRAFFIC VOLUME

TABLE 1

Time	Minor Street				Minor Street			
	Northbound				Southbound			
24 Hours	Total Approach Volume	Right Turn	% Right Turn	With 0 % RT Turn Reduction	Total Approach Volume	Right Turn	% Right Turn	With 0% RT Turn Reduction
12:00 AM	80	35	44	80	0	0	0	0
1:00 AM	50	20	40	50	0	0	0	0
2:00 AM	35	15	43	35	0	0	0	0
3:00 AM	30	15	50	30	0	0	0	0
4:00 AM	35	15	43	35	0	0	0	0
5:00 AM	80	35	44	80	0	0	0	0
6:00 AM	55	25	45	55	0	0	0	0
7:00 AM	115	50	43	115	0	0	0	0
8:00 AM	115	50	43	115	0	0	0	0
9:00 AM	120	50	42	120	0	0	0	0
10:00 AM	130	55	42	130	0	0	0	0
11:00 AM	165	70	42	165	0	0	0	0
12:00 PM	190	80	42	190	0	0	0	0
1:00 PM	190	80	42	190	0	0	0	0
2:00 PM	190	80	42	190	0	0	0	0
3:00 PM	200	85	43	200	0	0	0	0
4:00 PM	190	80	42	190	0	0	0	0
5:00 PM	220	95	43	220	0	0	0	0
6:00 PM	210	90	43	210	0	0	0	0
7:00 PM	155	65	42	155	0	0	0	0
8:00 PM	165	70	42	165	0	0	0	0
9:00 PM	120	50	42	120	0	0	0	0
10:00 PM	80	35	44	80	0	0	0	0
11:00 PM	75	30	40	75	0	0	0	0
Total				2995				0

JACOBS ENGINEERING

24-HOUR TRAFFIC VOLUME

TABLE 2

Time	Major Street				Major Street			
	Eastbound				Westbound			
24 Hours	Total Approach Volume	Right Turn	% Right Turn	With 0% RT Turn Reduction	Total Approach Volume	Right Turn	% Right Turn	With 0% RT Turn Reduction
12:00 AM	85	0	0	85	55	20	36	55
1:00 AM	65	0	0	65	40	15	38	40
2:00 AM	50	0	0	50	30	25	83	30
3:00 AM	65	0	0	65	50	25	50	50
4:00 AM	75	0	0	75	50	30	60	50
5:00 AM	85	0	0	85	60	50	83	60
6:00 AM	125	0	0	125	95	65	68	95
7:00 AM	145	0	0	145	140	70	50	140
8:00 AM	180	0	0	180	145	75	52	145
9:00 AM	170	0	0	170	160	75	47	160
10:00 AM	210	0	0	210	150	80	53	150
11:00 AM	245	0	0	245	165	90	55	165
12:00 PM	275	0	0	275	185	95	51	185
1:00 PM	245	0	0	245	195	105	54	195
2:00 PM	240	0	0	240	220	105	48	220
3:00 PM	265	0	0	265	210	110	52	210
4:00 PM	250	0	0	250	240	105	44	240
5:00 PM	255	0	0	255	220	90	41	220
6:00 PM	250	0	0	250	175	85	49	175
7:00 PM	210	0	0	210	180	65	36	180
8:00 PM	150	0	0	150	145	50	34	145
9:00 PM	150	0	0	150	95	45	47	95
10:00 PM	120	0	0	120	75	40	53	75
11:00 PM	105	0	0	105	85	15	18	85
Total				4015				3165

JACOBS ENGINEERING

WARRANT ANALYSIS RESULTS - Bellville Rd @ I-75 NB Ramp

WARRANT 1 - EIGHT-HOUR VEHICULAR VOLUME (100% Thresholds)

WARRANT 1* NOT SATISFIED

STANDARD 1	NOT SATISFIED	CONDITION A	0	HOURS
		CONDITION B	0	HOURS
STANDARD 2	NOT SATISFIED	CONDITION A	8	HOURS
		CONDITION B	0	HOURS

24-HOUR TRAFFIC VOLUME EVALUATION

TABLE 3

HOUR OF DAY	MAJOR ST TOTAL OF BOTH APPROACHES	MINOR ST HIGH VOLUME APPROACH	WARRANT 1			
			STANDARD 1		STANDARD 2	
			CONDITION A	CONDITION B	CONDITION A	CONDITION B
12:00 AM	140	80	0	MINOR	0	MINOR
1:00 AM	105	50	0	0	0	0
2:00 AM	80	35	0	0	0	0
3:00 AM	115	30	0	0	0	0
4:00 AM	125	35	0	0	0	0
5:00 AM	145	80	0	MINOR	0	MINOR
6:00 AM	220	55	0	0	0	0
7:00 AM	285	115	0	MINOR	0	MINOR
8:00 AM	325	115	0	MINOR	0	MINOR
9:00 AM	330	120	0	MINOR	MINOR	MINOR
10:00 AM	360	130	0	MINOR	MINOR	MINOR
11:00 AM	410	165	MINOR	MINOR	BOTH	MINOR
12:00 PM	460	190	MINOR	MINOR	BOTH	MINOR
1:00 PM	440	190	MINOR	MINOR	BOTH	MINOR
2:00 PM	460	190	MINOR	MINOR	BOTH	MINOR
3:00 PM	475	200	MINOR	MINOR	BOTH	MINOR
4:00 PM	490	190	MINOR	MINOR	BOTH	MINOR
5:00 PM	475	220	MINOR	MINOR	BOTH	MINOR
6:00 PM	425	210	MINOR	MINOR	BOTH	MINOR
7:00 PM	390	155	MINOR	MINOR	MINOR	MINOR
8:00 PM	295	165	MINOR	MINOR	MINOR	MINOR
9:00 PM	245	120	0	MINOR	MINOR	MINOR
10:00 PM	195	80	0	MINOR	0	MINOR
11:00 PM	190	75	0	MINOR	0	MINOR
TOTAL	7180	2995				

CRITERIA**		STANDARD 1 - 100%		STANDARD 2 - 80%	
		CONDITION A	CONDITION B	CONDITION A	CONDITION B
	MAJOR ST	500	750	400	600
	MINOR ST	150	75	120	60
NO. OF HOURS MET		0	0	8	0

JACOBS ENGINEERING

WARRANT 2, FOUR-HOUR VEHICULAR VOLUME **(100% Thresholds)**

WARRANT 2* NOT SATISFIED 0 HOURS

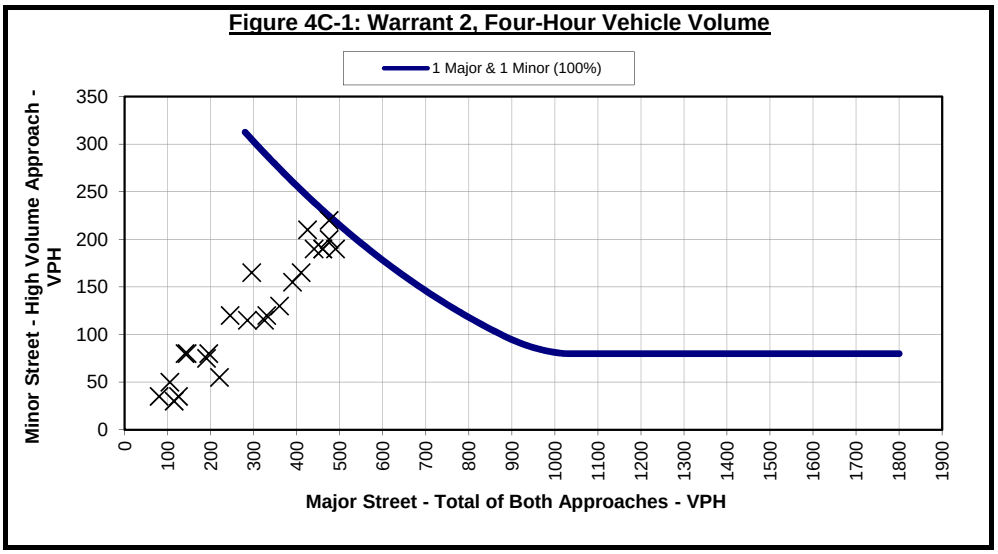

*Note: Curves for minimum volumes are based on the curves from FIGURES 4C-1 & 4C-2, MUTCD Section 4C.04

WARRANT 3, PEAK HOUR **(100% Thresholds)**

STANDARD A NOT EVALUATED 0 VEHICLE HOURS

0	Peak Hour Minor-Street Volume
0	Average Minor-Street Delay (seconds)
1	Number of Approach Lanes (Minor Street)

STANDARD B* NOT SATISFIED 0 HOURS

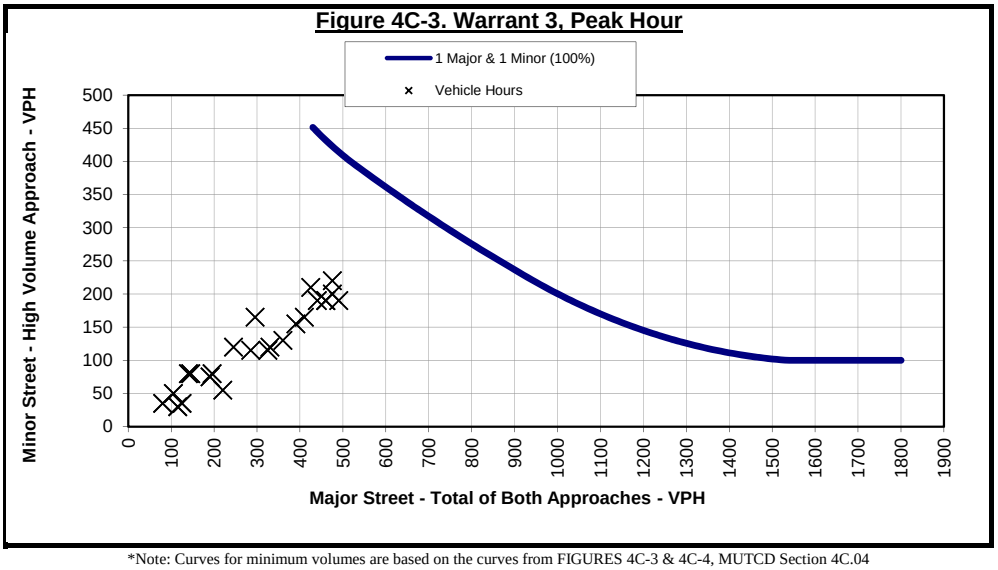

*Note: Curves for minimum volumes are based on the curves from FIGURES 4C-3 & 4C-4, MUTCD Section 4C.04

JACOBS ENGINEERING

WARRANT 4, PEDESTRIAN VOLUME **(100% Thresholds)**

WARRANT 4	NOT EVALUATED			
	STANDARD A	NOT SATISFIED	0	HOURS
	STANDARD B	NOT SATISFIED	0	HOURS

WARRANT 5, SCHOOL CROSSING

WARRANT 5 NOT EVALUATED

WARRANT 6, COORDINATED SIGNAL SYSTEM

WARRANT 6 NOT EVALUATED

WARRANT 7, CRASH EXPERIENCE

WARRANT 7 NOT EVALUATED

WARRANT 8, ROADWAY NETWORK

WARRANT 8 NOT EVALUATED

WARRANT 9, INTERSECTION NEAR A GRADE CROSSING

WARRANT 9 NOT EVALUATED

JACOBS ENGINEERING

SIGNAL WARRANT ANALYSIS SUMMARY REPORT:
Bellville Rd @ I-75 NB Ramp
2042 Build (Adjusted for Heavy Vehicles)

Project Number :	CB506050	Report Date :	November 28, 2016
Analyst :	GKW	Counts Date :	Fall 2016
Major Street :	Bellville Rd		
Minor Street :	I-75 NB Ramp		
Speed on Major Street :	45		
Lanes @ Intersection :	Major Street - 1		
	Minor Street - 1		

WARRANT 1, EIGHT-HOUR VEHICULAR VOLUME **100% Thresholds**

WARRANT 1	**SATISFIED**				
	STANDARD 1	**SATISFIED**	CONDITION A	11	HOURS
			CONDITION B	1	HOURS
	STANDARD 2	**SATISFIED**	CONDITION A	14	HOURS
			CONDITION B	9	HOURS

WARRANT 2, FOUR-HOUR VEHICULAR VOLUME **100% Thresholds**

WARRANT 2	**SATISFIED**	10	HOURS

WARRANT 3, PEAK HOUR VEHICULAR VOLUME **100% Thresholds**

WARRANT 3	**SATISFIED**		
STANDARD A	**NOT EVALUATED**	0	VEHICLE HOURS
STANDARD B	**SATISFIED**	1	HOURS

WARRANT 4, PEDESTRIAN VOLUME **100% Thresholds**

WARRANT 4	**NOT EVALUATED**		
STANDARD A	**NOT SATISFIED**	0	HOURS
STANDARD B	**NOT SATISFIED**	0	HOURS

WARRANT 5, SCHOOL CROSSING

WARRANT 5 **NOT EVALUATED**

WARRANT 6, COORDINATED SIGNAL SYSTEM

WARRANT 6 **NOT EVALUATED**

WARRANT 7, CRASH EXPERIENCE

WARRANT 7 **NOT EVALUATED**

WARRANT 8, ROADWAY NETWORK

WARRANT 8 **NOT EVALUATED**

WARRANT 9, INTERSECTION NEAR A GRADE CROSSING

WARRANT 9 **NOT EVALUATED**

JACOBS ENGINEERING

SIGNAL WARRANT ANALYSIS SUMMARY REPORT:
Bellville Rd @ I-75 NB Ramp
2042 Build (Adjusted for Heavy Vehicles)

Analyst : GKW
Major Street : Bellville Rd
Minor Street : I-75 NB Ramp
Speed on Major Street : 45

Report Date : November 28, 2016
Counts Date : Fall 2016
Lanes @ Intersection : Major Street - 1
Minor Street - 1

24-HOUR TRAFFIC VOLUME

TABLE 1

Time	Minor Street Northbound				Minor Street Southbound			
24 Hours	Total Approach Volume	Right Turn	% Right Turn	With 0 % RT Turn Reduction	Total Approach Volume	Right Turn	% Right Turn	With 0% RT Turn Reduction
12:00 AM	115	50	43	115	0	0	0	0
1:00 AM	75	30	40	75	0	0	0	0
2:00 AM	50	20	40	50	0	0	0	0
3:00 AM	40	20	50	40	0	0	0	0
4:00 AM	50	20	40	50	0	0	0	0
5:00 AM	115	50	43	115	0	0	0	0
6:00 AM	80	35	44	80	0	0	0	0
7:00 AM	170	75	44	170	0	0	0	0
8:00 AM	170	75	44	170	0	0	0	0
9:00 AM	175	75	43	175	0	0	0	0
10:00 AM	190	80	42	190	0	0	0	0
11:00 AM	240	100	42	240	0	0	0	0
12:00 PM	275	115	42	275	0	0	0	0
1:00 PM	275	115	42	275	0	0	0	0
2:00 PM	275	115	42	275	0	0	0	0
3:00 PM	290	125	43	290	0	0	0	0
4:00 PM	275	115	42	275	0	0	0	0
5:00 PM	320	140	44	320	0	0	0	0
6:00 PM	305	130	43	305	0	0	0	0
7:00 PM	225	95	42	225	0	0	0	0
8:00 PM	240	100	42	240	0	0	0	0
9:00 PM	175	75	43	175	0	0	0	0
10:00 PM	115	50	43	115	0	0	0	0
11:00 PM	110	45	41	110	0	0	0	0
Total				4350				0

JACOBS ENGINEERING

24-HOUR TRAFFIC VOLUME

TABLE 2

Time	Major Street				Major Street			
	Eastbound				Westbound			
24 Hours	Total Approach Volume	Right Turn	% Right Turn	With 0% RT Turn Reduction	Total Approach Volume	Right Turn	% Right Turn	With 0% RT Turn Reduction
12:00 AM	125	0	0	125	90	40	44	90
1:00 AM	95	0	0	95	60	30	50	60
2:00 AM	70	0	0	70	50	25	50	50
3:00 AM	95	0	0	95	80	40	50	80
4:00 AM	110	0	0	110	80	40	50	80
5:00 AM	125	0	0	125	100	50	50	100
6:00 AM	185	0	0	185	150	70	47	150
7:00 AM	215	0	0	215	225	105	47	225
8:00 AM	265	0	0	265	230	110	48	230
9:00 AM	255	0	0	255	255	120	47	255
10:00 AM	315	0	0	315	235	110	47	235
11:00 AM	365	0	0	365	260	125	48	260
12:00 PM	410	0	0	410	295	145	49	295
1:00 PM	365	0	0	365	310	150	48	310
2:00 PM	355	0	0	355	345	165	48	345
3:00 PM	395	0	0	395	335	160	48	335
4:00 PM	375	0	0	375	380	180	47	380
5:00 PM	380	0	0	380	345	165	48	345
6:00 PM	375	0	0	375	280	135	48	280
7:00 PM	315	0	0	315	285	135	47	285
8:00 PM	225	0	0	225	230	110	48	230
9:00 PM	225	0	0	225	150	70	47	150
10:00 PM	175	0	0	175	120	55	46	120
11:00 PM	155	0	0	155	135	65	48	135
Total				5970				5025

JACOBS ENGINEERING

WARRANT ANALYSIS RESULTS - Bellville Rd @ I-75 NB Ramp

WARRANT 1 - EIGHT-HOUR VEHICULAR VOLUME (100% Thresholds)

WARRANT 1* SATISFIED

STANDARD 1	SATISFIED	CONDITION A	11	HOURS
		CONDITION B	1	HOURS
STANDARD 2	SATISFIED	CONDITION A	14	HOURS
		CONDITION B	9	HOURS

24-HOUR TRAFFIC VOLUME EVALUATION

TABLE 3

HOUR OF DAY	MAJOR ST TOTAL OF BOTH APPROACHES	MINOR ST HIGH VOLUME APPROACH	WARRANT 1			
			STANDARD 1		STANDARD 2	
			CONDITION A	CONDITION B	CONDITION A	CONDITION B
12:00 AM	215	115	0	MINOR	0	MINOR
1:00 AM	155	75	0	MINOR	0	MINOR
2:00 AM	120	50	0	0	0	0
3:00 AM	175	40	0	0	0	0
4:00 AM	190	50	0	0	0	0
5:00 AM	225	115	0	MINOR	0	MINOR
6:00 AM	335	80	0	MINOR	0	MINOR
7:00 AM	440	170	MINOR	MINOR	BOTH	MINOR
8:00 AM	495	170	MINOR	MINOR	BOTH	MINOR
9:00 AM	510	175	BOTH	MINOR	BOTH	MINOR
10:00 AM	550	190	BOTH	MINOR	BOTH	MINOR
11:00 AM	625	240	BOTH	MINOR	BOTH	BOTH
12:00 PM	705	275	BOTH	MINOR	BOTH	BOTH
1:00 PM	675	275	BOTH	MINOR	BOTH	BOTH
2:00 PM	700	275	BOTH	MINOR	BOTH	BOTH
3:00 PM	730	290	BOTH	MINOR	BOTH	BOTH
4:00 PM	755	275	BOTH	BOTH	BOTH	BOTH
5:00 PM	725	320	BOTH	MINOR	BOTH	BOTH
6:00 PM	655	305	BOTH	MINOR	BOTH	BOTH
7:00 PM	600	225	BOTH	MINOR	BOTH	BOTH
8:00 PM	455	240	MINOR	MINOR	BOTH	MINOR
9:00 PM	375	175	MINOR	MINOR	MINOR	MINOR
10:00 PM	295	115	0	MINOR	0	MINOR
11:00 PM	290	110	0	MINOR	0	MINOR
TOTAL	10995	4350				

CRITERIA**		STANDARD 1 - 100%		STANDARD 2 - 80%	
		CONDITION A	CONDITION B	CONDITION A	CONDITION B
	MAJOR ST	500	750	400	600
	MINOR ST	150	75	120	60
NO. OF HOURS MET		11	1	14	9

JACOBS ENGINEERING

WARRANT 2, FOUR-HOUR VEHICULAR VOLUME **(100% Thresholds)**

WARRANT 2* SATISFIED 10 HOURS

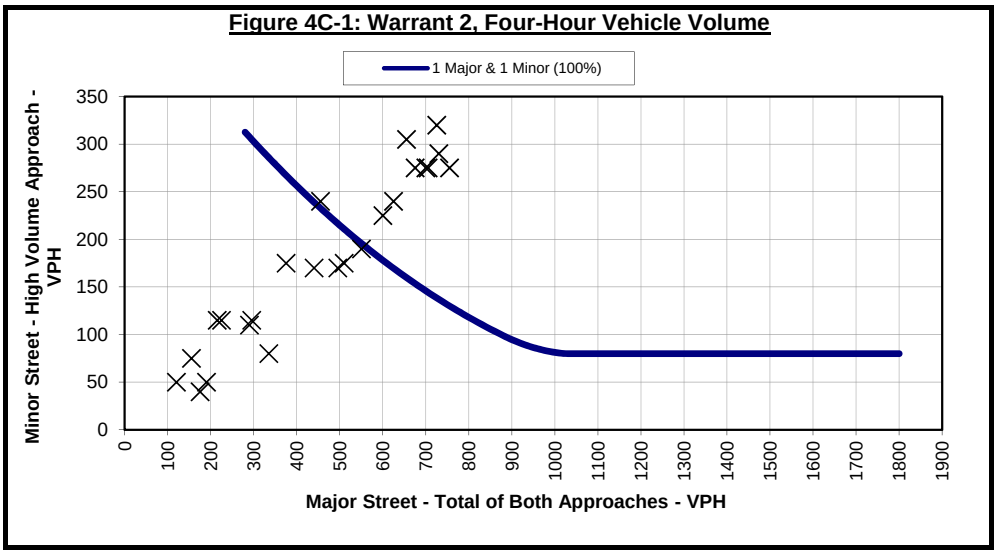

*Note: Curves for minimum volumes are based on the curves from FIGURES 4C-1 & 4C-2, MUTCD Section 4C.04

WARRANT 3, PEAK HOUR **(100% Thresholds)**

STANDARD A NOT EVALUATED 0 VEHICLE HOURS

0	Peak Hour Minor-Street Volume
0	Average Minor-Street Delay (seconds)
1	Number of Approach Lanes (Minor Street)

STANDARD B* SATISFIED 1 HOURS

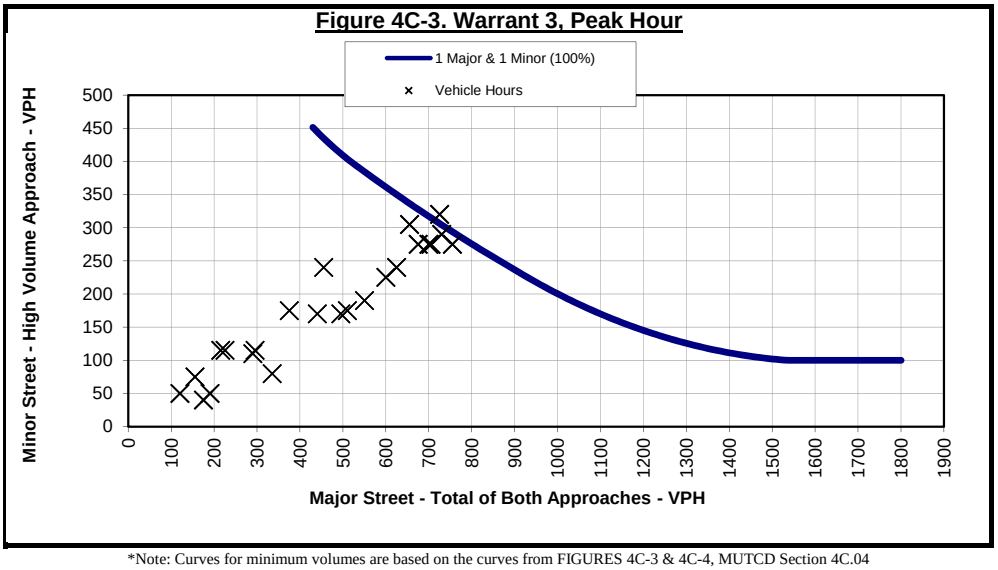

*Note: Curves for minimum volumes are based on the curves from FIGURES 4C-3 & 4C-4, MUTCD Section 4C.04

JACOBS ENGINEERING

WARRANT 4, PEDESTRIAN VOLUME **(100% Thresholds)**

WARRANT 4	NOT EVALUATED			
	STANDARD A	NOT SATISFIED	0	HOURS
	STANDARD B	NOT SATISFIED	0	HOURS

WARRANT 5, SCHOOL CROSSING

WARRANT 5 NOT EVALUATED

WARRANT 6, COORDINATED SIGNAL SYSTEM

WARRANT 6 NOT EVALUATED

WARRANT 7, CRASH EXPERIENCE

WARRANT 7 NOT EVALUATED

WARRANT 8, ROADWAY NETWORK

WARRANT 8 NOT EVALUATED

WARRANT 9, INTERSECTION NEAR A GRADE CROSSING

WARRANT 9 NOT EVALUATED

Appendix G. Existing Intersection Analysis

Intersection	
Int Delay, s/veh	4.2

Movement	EBL	EBT	EBR	WBL	WBT	WBR	NBL	NBT	NBR	SBL	SBT	SBR
Lane Configurations												
Traffic Vol, veh/h	60	50	0	0	45	45	35	0	35	0	0	0
Future Vol, veh/h	60	50	0	0	45	45	35	0	35	0	0	0
Conflicting Peds, #/hr	0	0	0	0	0	0	0	0	0	0	0	0
Sign Control	Free	Free	Free	Free	Free	Free	Stop	Stop	Stop	Stop	Stop	Stop
RT Channelized	-	-	None	-	-	None	-	-	None	-	-	None
Storage Length	-	-	-	-	-	-	-	-	-	-	-	-
Veh in Median Storage, #	-	0	-	-	0	-	-	0	-	-	-	-
Grade, %	-	0	-	-	0	-	-	0	-	-	0	-
Peak Hour Factor	81	81	81	73	73	73	91	91	91	92	92	92
Heavy Vehicles, %	62	62	62	50	50	50	35	35	35	2	2	2
Mvmt Flow	74	62	0	0	62	62	38	0	38	0	0	0

Major/Minor	Major1			Major2			Minor1		
Conflicting Flow All	123	0	-	-	-	0	302	333	62
Stage 1	-	-	-	-	-	-	210	210	-
Stage 2	-	-	-	-	-	-	92	123	-
Critical Hdwy	4.72	-	-	-	-	-	6.75	6.85	6.55
Critical Hdwy Stg 1	-	-	-	-	-	-	5.75	5.85	-
Critical Hdwy Stg 2	-	-	-	-	-	-	5.75	5.85	-
Follow-up Hdwy	2.758	-	-	-	-	-	3.815	4.315	3.615
Pot Cap-1 Maneuver	1164	-	0	0	-	-	626	537	918
Stage 1	-	-	0	0	-	-	753	671	-
Stage 2	-	-	0	0	-	-	855	735	-
Platoon blocked, %		-			-	-			
Mov Cap-1 Maneuver	1164	-	-	-	-	-	585	0	918
Mov Cap-2 Maneuver	-	-	-	-	-	-	585	0	-
Stage 1	-	-	-	-	-	-	703	0	-
Stage 2	-	-	-	-	-	-	855	0	-

Approach	EB	WB	NB
HCM Control Delay, s	4.5	0	10.6
HCM LOS			B

Minor Lane/Major Mvmt	NBLn1	EBL	EBT	WBT	WBR
Capacity (veh/h)	715	1164	-	-	-
HCM Lane V/C Ratio	0.108	0.064	-	-	-
HCM Control Delay (s)	10.6	8.3	0	-	-
HCM Lane LOS	B	A	A	-	-
HCM 95th %tile Q(veh)	0.4	0.2	-	-	-

Intersection	
Int Delay, s/veh	5.2

Movement	EBL	EBT	EBR	WBL	WBT	WBR	NBL	NBT	NBR	SBL	SBT	SBR
Lane Configurations												
Traffic Vol, veh/h	50	70	0	0	55	55	45	0	60	0	0	0
Future Vol, veh/h	50	70	0	0	55	55	45	0	60	0	0	0
Conflicting Peds, #/hr	0	0	0	0	0	0	0	0	0	0	0	0
Sign Control	Free	Free	Free	Free	Free	Free	Stop	Stop	Stop	Stop	Stop	Stop
RT Channelized	-	-	None	-	-	None	-	-	None	-	-	None
Storage Length	-	-	-	-	-	-	-	-	-	-	-	-
Veh in Median Storage, #	-	0	-	-	0	-	-	0	-	-	-	-
Grade, %	-	0	-	-	0	-	-	0	-	-	0	-
Peak Hour Factor	96	96	96	96	96	96	74	74	74	92	92	92
Heavy Vehicles, %	50	50	50	46	46	46	46	46	46	2	2	2
Mvmt Flow	52	73	0	0	57	57	61	0	81	0	0	0

Major/Minor	Major1			Major2			Minor1		
Conflicting Flow All	115	0	-	-	-	0	263	292	73
Stage 1	-	-	-	-	-	-	177	177	-
Stage 2	-	-	-	-	-	-	86	115	-
Critical Hdwy	4.6	-	-	-	-	-	6.86	6.96	6.66
Critical Hdwy Stg 1	-	-	-	-	-	-	5.86	5.96	-
Critical Hdwy Stg 2	-	-	-	-	-	-	5.86	5.96	-
Follow-up Hdwy	2.65	-	-	-	-	-	3.914	4.414	3.714
Pot Cap-1 Maneuver	1223	-	0	0	-	-	641	552	879
Stage 1	-	-	0	0	-	-	758	677	-
Stage 2	-	-	0	0	-	-	838	723	-
Platoon blocked, %		-			-	-			
Mov Cap-1 Maneuver	1223	-	-	-	-	-	613	0	879
Mov Cap-2 Maneuver	-	-	-	-	-	-	613	0	-
Stage 1	-	-	-	-	-	-	725	0	-
Stage 2	-	-	-	-	-	-	838	0	-

Approach	EB	WB	NB
HCM Control Delay, s	3.4	0	11
HCM LOS			B

Minor Lane/Major Mvmt	NBLn1	EBL	EBT	WBT	WBR
Capacity (veh/h)	741	1223	-	-	-
HCM Lane V/C Ratio	0.191	0.043	-	-	-
HCM Control Delay (s)	11	8.1	0	-	-
HCM Lane LOS	B	A	A	-	-
HCM 95th %tile Q(veh)	0.7	0.1	-	-	-

Appendix H. Future Intersection Analysis (No Signal)

Intersection	
Int Delay, s/veh	4.2

Movement	EBL	EBT	EBR	WBL	WBT	WBR	NBL	NBT	NBR	SBL	SBT	SBR
Lane Configurations												
Traffic Vol, veh/h	70	60	0	0	55	50	40	0	40	0	0	0
Future Vol, veh/h	70	60	0	0	55	50	40	0	40	0	0	0
Conflicting Peds, #/hr	0	0	0	0	0	0	0	0	0	0	0	0
Sign Control	Free	Free	Free	Free	Free	Free	Stop	Stop	Stop	Stop	Stop	Stop
RT Channelized	-	-	None	-	-	None	-	-	None	-	-	None
Storage Length	0	-	-	-	-	250	-	-	-	-	-	-
Veh in Median Storage, #	-	0	-	-	0	-	-	0	-	-	-	-
Grade, %	-	0	-	-	0	-	-	0	-	-	0	-
Peak Hour Factor	81	81	81	73	73	73	91	91	91	92	92	92
Heavy Vehicles, %	62	62	62	50	50	50	35	35	35	2	2	2
Mvmt Flow	86	74	0	0	75	68	44	0	44	0	0	0

Major/Minor	Major1			Major2			Minor1		
Conflicting Flow All	75	0	-	-	-	0	322	322	74
Stage 1	-	-	-	-	-	-	247	247	-
Stage 2	-	-	-	-	-	-	75	75	-
Critical Hdwy	4.72	-	-	-	-	-	6.75	6.85	6.55
Critical Hdwy Stg 1	-	-	-	-	-	-	5.75	5.85	-
Critical Hdwy Stg 2	-	-	-	-	-	-	5.75	5.85	-
Follow-up Hdwy	2.758	-	-	-	-	-	3.815	4.315	3.615
Pot Cap-1 Maneuver	1217	-	0	0	-	-	609	545	903
Stage 1	-	-	0	0	-	-	723	645	-
Stage 2	-	-	0	0	-	-	871	772	-
Platoon blocked, %		-			-	-			
Mov Cap-1 Maneuver	1217	-	-	-	-	-	566	0	903
Mov Cap-2 Maneuver	-	-	-	-	-	-	566	0	-
Stage 1	-	-	-	-	-	-	672	0	-
Stage 2	-	-	-	-	-	-	871	0	-

Approach	EB	WB	NB
HCM Control Delay, s	4.4	0	10.9
HCM LOS			B

Minor Lane/Major Mvmt	NBLn1	EBL	EBT	WBT	WBR
Capacity (veh/h)	696	1217	-	-	-
HCM Lane V/C Ratio	0.126	0.071	-	-	-
HCM Control Delay (s)	10.9	8.2	-	-	-
HCM Lane LOS	B	A	-	-	-
HCM 95th %tile Q(veh)	0.4	0.2	-	-	-

Intersection	
Int Delay, s/veh	5.3

Movement	EBL	EBT	EBR	WBL	WBT	WBR	NBL	NBT	NBR	SBL	SBT	SBR
Lane Configurations												
Traffic Vol, veh/h	60	80	0	0	65	65	50	0	70	0	0	0
Future Vol, veh/h	60	80	0	0	65	65	50	0	70	0	0	0
Conflicting Peds, #/hr	0	0	0	0	0	0	0	0	0	0	0	0
Sign Control	Free	Free	Free	Free	Free	Free	Stop	Stop	Stop	Stop	Stop	Stop
RT Channelized	-	-	None	-	-	None	-	-	None	-	-	None
Storage Length	0	-	-	-	-	250	-	-	-	-	-	-
Veh in Median Storage, #	-	0	-	-	0	-	-	0	-	-	-	-
Grade, %	-	0	-	-	0	-	-	0	-	-	0	-
Peak Hour Factor	96	96	96	96	96	96	74	74	74	92	92	92
Heavy Vehicles, %	50	50	50	46	46	46	46	46	46	2	2	2
Mvmt Flow	63	83	0	0	68	68	68	0	95	0	0	0

Major/Minor	Major1			Major2			Minor1		
Conflicting Flow All	68	0	-	-	-	0	276	276	83
Stage 1	-	-	-	-	-	-	208	208	-
Stage 2	-	-	-	-	-	-	68	68	-
Critical Hdwy	4.6	-	-	-	-	-	6.86	6.96	6.66
Critical Hdwy Stg 1	-	-	-	-	-	-	5.86	5.96	-
Critical Hdwy Stg 2	-	-	-	-	-	-	5.86	5.96	-
Follow-up Hdwy	2.65	-	-	-	-	-	3.914	4.414	3.714
Pot Cap-1 Maneuver	1277	-	0	0	-	-	629	564	867
Stage 1	-	-	0	0	-	-	733	655	-
Stage 2	-	-	0	0	-	-	854	760	-
Platoon blocked, %		-			-	-			
Mov Cap-1 Maneuver	1277	-	-	-	-	-	598	0	867
Mov Cap-2 Maneuver	-	-	-	-	-	-	598	0	-
Stage 1	-	-	-	-	-	-	697	0	-
Stage 2	-	-	-	-	-	-	854	0	-

Approach	EB	WB	NB
HCM Control Delay, s	3.4	0	11.3
HCM LOS			B

Minor Lane/Major Mvmt	NBLn1	EBL	EBT	WBT	WBR
Capacity (veh/h)	730	1277	-	-	-
HCM Lane V/C Ratio	0.222	0.049	-	-	-
HCM Control Delay (s)	11.3	8	-	-	-
HCM Lane LOS	B	A	-	-	-
HCM 95th %tile Q(veh)	0.8	0.2	-	-	-

Intersection	
Int Delay, s/veh	5

Movement	EBL	EBT	EBR	WBL	WBT	WBR	NBL	NBT	NBR	SBL	SBT	SBR
Lane Configurations												
Traffic Vol, veh/h	115	100	0	0	90	80	65	0	65	0	0	0
Future Vol, veh/h	115	100	0	0	90	80	65	0	65	0	0	0
Conflicting Peds, #/hr	0	0	0	0	0	0	0	0	0	0	0	0
Sign Control	Free	Free	Free	Free	Free	Free	Stop	Stop	Stop	Stop	Stop	Stop
RT Channelized	-	-	None	-	-	None	-	-	None	-	-	None
Storage Length	0	-	-	-	-	250	-	-	-	-	-	-
Veh in Median Storage, #	-	0	-	-	0	-	-	0	-	-	-	-
Grade, %	-	0	-	-	0	-	-	0	-	-	0	-
Peak Hour Factor	81	81	81	73	73	73	91	91	91	92	92	92
Heavy Vehicles, %	62	62	62	50	50	50	35	35	35	2	2	2
Mvmt Flow	142	123	0	0	123	110	71	0	71	0	0	0

Major/Minor	Major1			Major2			Minor1		
Conflicting Flow All	123	0	-	-	-	0	530	530	123
Stage 1	-	-	-	-	-	-	407	407	-
Stage 2	-	-	-	-	-	-	123	123	-
Critical Hdwy	4.72	-	-	-	-	-	6.75	6.85	6.55
Critical Hdwy Stg 1	-	-	-	-	-	-	5.75	5.85	-
Critical Hdwy Stg 2	-	-	-	-	-	-	5.75	5.85	-
Follow-up Hdwy	2.758	-	-	-	-	-	3.815	4.315	3.615
Pot Cap-1 Maneuver	1164	-	0	0	-	-	457	411	846
Stage 1	-	-	0	0	-	-	606	544	-
Stage 2	-	-	0	0	-	-	827	735	-
Platoon blocked, %		-			-	-			
Mov Cap-1 Maneuver	1164	-	-	-	-	-	401	0	846
Mov Cap-2 Maneuver	-	-	-	-	-	-	401	0	-
Stage 1	-	-	-	-	-	-	532	0	-
Stage 2	-	-	-	-	-	-	827	0	-

Approach	EB	WB	NB
HCM Control Delay, s	4.6	0	14
HCM LOS			B

Minor Lane/Major Mvmt	NBLn1	EBL	EBT	WBT	WBR
Capacity (veh/h)	544	1164	-	-	-
HCM Lane V/C Ratio	0.263	0.122	-	-	-
HCM Control Delay (s)	14	8.5	-	-	-
HCM Lane LOS	B	A	-	-	-
HCM 95th %tile Q(veh)	1	0.4	-	-	-

Intersection	
Int Delay, s/veh	6.8

Movement	EBL	EBT	EBR	WBL	WBT	WBR	NBL	NBT	NBR	SBL	SBT	SBR
Lane Configurations												
Traffic Vol, veh/h	100	130	0	0	105	105	80	0	115	0	0	0
Future Vol, veh/h	100	130	0	0	105	105	80	0	115	0	0	0
Conflicting Peds, #/hr	0	0	0	0	0	0	0	0	0	0	0	0
Sign Control	Free	Free	Free	Free	Free	Free	Stop	Stop	Stop	Stop	Stop	Stop
RT Channelized	-	-	None	-	-	None	-	-	None	-	-	None
Storage Length	0	-	-	-	-	250	-	-	-	-	-	-
Veh in Median Storage, #	-	0	-	-	0	-	-	0	-	-	-	-
Grade, %	-	0	-	-	0	-	-	0	-	-	0	-
Peak Hour Factor	96	96	96	96	96	96	74	74	74	92	92	92
Heavy Vehicles, %	50	50	50	46	46	46	46	46	46	2	2	2
Mvmt Flow	104	135	0	0	109	109	108	0	155	0	0	0

Major/Minor	Major1			Major2			Minor1		
Conflicting Flow All	109	0	-	-	-	0	453	453	135
Stage 1	-	-	-	-	-	-	344	344	-
Stage 2	-	-	-	-	-	-	109	109	-
Critical Hdwy	4.6	-	-	-	-	-	6.86	6.96	6.66
Critical Hdwy Stg 1	-	-	-	-	-	-	5.86	5.96	-
Critical Hdwy Stg 2	-	-	-	-	-	-	5.86	5.96	-
Follow-up Hdwy	2.65	-	-	-	-	-	3.914	4.414	3.714
Pot Cap-1 Maneuver	1230	-	0	0	-	-	491	443	809
Stage 1	-	-	0	0	-	-	630	566	-
Stage 2	-	-	0	0	-	-	817	727	-
Platoon blocked, %		-			-	-			
Mov Cap-1 Maneuver	1230	-	-	-	-	-	449	0	809
Mov Cap-2 Maneuver	-	-	-	-	-	-	449	0	-
Stage 1	-	-	-	-	-	-	577	0	-
Stage 2	-	-	-	-	-	-	817	0	-

Approach	EB	WB	NB
HCM Control Delay, s	3.6	0	15.3
HCM LOS			C

Minor Lane/Major Mvmt	NBLn1	EBL	EBT	WBT	WBR
Capacity (veh/h)	609	1230	-	-	-
HCM Lane V/C Ratio	0.433	0.085	-	-	-
HCM Control Delay (s)	15.3	8.2	-	-	-
HCM Lane LOS	C	A	-	-	-
HCM 95th %tile Q(veh)	2.2	0.3	-	-	-

Appendix I. Future Intersection Analysis (With Signal)

Lane Group	EBL	EBT	WBT	WBR	NBT
Lane Configurations					
Traffic Volume (vph)	70	60	55	50	0
Future Volume (vph)	70	60	55	50	0
Turn Type	Perm	NA	NA	Perm	NA
Protected Phases		2	6		8
Permitted Phases	2			6	
Detector Phase	2	2	6	6	8
Switch Phase					
Minimum Initial (s)	5.0	5.0	5.0	5.0	5.0
Minimum Split (s)	23.5	23.5	23.5	23.5	27.5
Total Split (s)	56.0	56.0	56.0	56.0	44.0
Total Split (%)	56.0%	56.0%	56.0%	56.0%	44.0%
Yellow Time (s)	3.5	3.5	3.5	3.5	3.5
All-Red Time (s)	2.0	2.0	2.0	2.0	2.0
Lost Time Adjust (s)	0.0	0.0	0.0	0.0	0.0
Total Lost Time (s)	5.5	5.5	5.5	5.5	5.5
Lead/Lag					
Lead-Lag Optimize?					
Recall Mode	Min	Min	Min	Min	Min

Intersection Summary
Cycle Length: 100
Actuated Cycle Length: 25.9
Natural Cycle: 55
Control Type: Actuated-Uncoordinated

Splits and Phases: 2: I-75 NB Ramps & Bellville Road

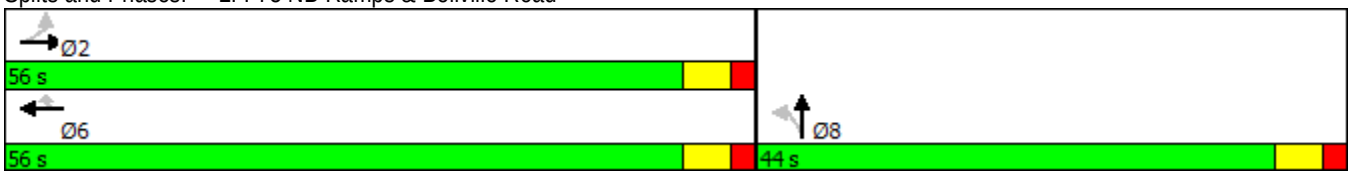

Movement	EBL	EBT	EBR	WBL	WBT	WBR	NBL	NBT	NBR	SBL	SBT	SBR
Lane Configurations												
Traffic Volume (veh/h)	70	60	0	0	55	50	40	0	40	0	0	0
Future Volume (veh/h)	70	60	0	0	55	50	40	0	40	0	0	0
Number	5	2	12	1	6	16	3	8	18			
Initial Q (Qb), veh	0	0	0	0	0	0	0	0	0			
Ped-Bike Adj(A_pbT)	1.00		1.00	1.00		1.00	1.00		1.00			
Parking Bus, Adj	1.00	1.00	1.00	1.00	1.00	1.00	1.00	1.00	1.00			
Adj Sat Flow, veh/h/ln	1173	1173	0	0	1267	1267	1900	1407	1900			
Adj Flow Rate, veh/h	86	74	0	0	75	68	44	0	44			
Adj No. of Lanes	1	1	0	0	1	1	0	1	0			
Peak Hour Factor	0.81	0.81	0.81	0.73	0.73	0.73	0.91	0.91	0.91			
Percent Heavy Veh, %	62	62	0	0	50	50	0	35	0			
Cap, veh/h	534	410	0	0	443	376	129	0	129			
Arrive On Green	0.35	0.35	0.00	0.00	0.35	0.35	0.20	0.00	0.20			
Sat Flow, veh/h	781	1173	0	0	1267	1077	632	0	632			
Grp Volume(v), veh/h	86	74	0	0	75	68	88	0	0			
Grp Sat Flow(s),veh/h/ln	781	1173	0	0	1267	1077	1264	0	0			
Q Serve(g_s), s	2.1	1.1	0.0	0.0	1.0	1.1	1.5	0.0	0.0			
Cycle Q Clear(g_c), s	3.1	1.1	0.0	0.0	1.0	1.1	1.5	0.0	0.0			
Prop In Lane	1.00		0.00	0.00		1.00	0.50		0.50			
Lane Grp Cap(c), veh/h	534	410	0	0	443	376	257	0	0			
V/C Ratio(X)	0.16	0.18	0.00	0.00	0.17	0.18	0.34	0.00	0.00			
Avail Cap(c_a), veh/h	1864	2408	0	0	2601	2211	1979	0	0			
HCM Platoon Ratio	1.00	1.00	1.00	1.00	1.00	1.00	1.00	1.00	1.00			
Upstream Filter(I)	1.00	1.00	0.00	0.00	1.00	1.00	1.00	0.00	0.00			
Uniform Delay (d), s/veh	6.6	5.6	0.0	0.0	5.5	5.6	8.4	0.0	0.0			
Incr Delay (d2), s/veh	0.1	0.2	0.0	0.0	0.2	0.2	0.8	0.0	0.0			
Initial Q Delay(d3),s/veh	0.0	0.0	0.0	0.0	0.0	0.0	0.0	0.0	0.0			
%ile BackOfQ(95%),veh/ln	0.9	0.7	0.0	0.0	0.6	0.6	1.0	0.0	0.0			
LnGrp Delay(d),s/veh	6.7	5.8	0.0	0.0	5.7	5.8	9.2	0.0	0.0			
LnGrp LOS	A	A			A	A	A					
Approach Vol, veh/h		160			143			88				
Approach Delay, s/veh		6.3			5.7			9.2				
Approach LOS		A			A			A				

Timer	1	2	3	4	5	6	7	8
Assigned Phs		2				6		8
Phs Duration (G+Y+Rc), s		14.1				14.1		10.5
Change Period (Y+Rc), s		5.5				5.5		5.5
Max Green Setting (Gmax), s		50.5				50.5		38.5
Max Q Clear Time (g_c+I1), s		5.1				3.1		3.5
Green Ext Time (p_c), s		3.5				3.5		0.3

Intersection Summary	
HCM 2010 Ctrl Delay	6.7
HCM 2010 LOS	A

Lane Group	EBL	EBT	WBT	WBR	NBT
Lane Configurations					
Traffic Volume (vph)	60	80	65	65	0
Future Volume (vph)	60	80	65	65	0
Turn Type	Perm	NA	NA	Perm	NA
Protected Phases		2	6		8
Permitted Phases	2			6	
Detector Phase	2	2	6	6	8
Switch Phase					
Minimum Initial (s)	5.0	5.0	5.0	5.0	5.0
Minimum Split (s)	23.5	23.5	23.5	23.5	27.5
Total Split (s)	45.0	45.0	45.0	45.0	55.0
Total Split (%)	45.0%	45.0%	45.0%	45.0%	55.0%
Yellow Time (s)	3.5	3.5	3.5	3.5	3.5
All-Red Time (s)	2.0	2.0	2.0	2.0	2.0
Lost Time Adjust (s)	0.0	0.0	0.0	0.0	0.0
Total Lost Time (s)	5.5	5.5	5.5	5.5	5.5
Lead/Lag					
Lead-Lag Optimize?					
Recall Mode	Min	Min	Min	Min	Min

Intersection Summary
Cycle Length: 100
Actuated Cycle Length: 25.9
Natural Cycle: 55
Control Type: Actuated-Uncoordinated

Splits and Phases: 2: I-75 NB Ramps & Bellville Road

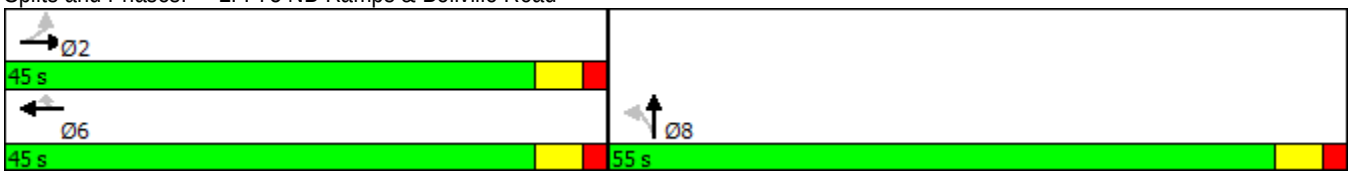

Movement	EBL	EBT	EBR	WBL	WBT	WBR	NBL	NBT	NBR	SBL	SBT	SBR
Lane Configurations												
Traffic Volume (veh/h)	60	80	0	0	65	65	50	0	70	0	0	0
Future Volume (veh/h)	60	80	0	0	65	65	50	0	70	0	0	0
Number	5	2	12	1	6	16	3	8	18			
Initial Q (Qb), veh	0	0	0	0	0	0	0	0	0			
Ped-Bike Adj(A_pbT)	1.00		1.00	1.00		1.00	1.00		1.00			
Parking Bus, Adj	1.00	1.00	1.00	1.00	1.00	1.00	1.00	1.00	1.00			
Adj Sat Flow, veh/h/ln	1267	1267	0	0	1301	1301	1900	1301	1900			
Adj Flow Rate, veh/h	62	83	0	0	68	68	68	0	95			
Adj No. of Lanes	1	1	0	0	1	1	0	1	0			
Peak Hour Factor	0.96	0.96	0.96	0.96	0.96	0.96	0.74	0.74	0.74			
Percent Heavy Veh, %	50	50	0	0	46	46	0	46	0			
Cap, veh/h	528	388	0	0	399	339	113	0	158			
Arrive On Green	0.31	0.31	0.00	0.00	0.31	0.31	0.23	0.00	0.23			
Sat Flow, veh/h	849	1267	0	0	1301	1106	483	0	675			
Grp Volume(v), veh/h	62	83	0	0	68	68	163	0	0			
Grp Sat Flow(s),veh/h/ln	849	1267	0	0	1301	1106	1158	0	0			
Q Serve(g_s), s	1.4	1.2	0.0	0.0	0.9	1.1	3.0	0.0	0.0			
Cycle Q Clear(g_c), s	2.3	1.2	0.0	0.0	0.9	1.1	3.0	0.0	0.0			
Prop In Lane	1.00		0.00	0.00		1.00	0.42		0.58			
Lane Grp Cap(c), veh/h	528	388	0	0	399	339	271	0	0			
V/C Ratio(X)	0.12	0.21	0.00	0.00	0.17	0.20	0.60	0.00	0.00			
Avail Cap(c_a), veh/h	1667	2088	0	0	2145	1823	2392	0	0			
HCM Platoon Ratio	1.00	1.00	1.00	1.00	1.00	1.00	1.00	1.00	1.00			
Upstream Filter(I)	1.00	1.00	0.00	0.00	1.00	1.00	1.00	0.00	0.00			
Uniform Delay (d), s/veh	6.9	6.2	0.0	0.0	6.1	6.1	8.2	0.0	0.0			
Incr Delay (d2), s/veh	0.1	0.3	0.0	0.0	0.2	0.3	2.1	0.0	0.0			
Initial Q Delay(d3),s/veh	0.0	0.0	0.0	0.0	0.0	0.0	0.0	0.0	0.0			
%ile BackOfQ(95%),veh/ln	0.6	0.8	0.0	0.0	0.6	0.6	2.0	0.0	0.0			
LnGrp Delay(d),s/veh	7.0	6.4	0.0	0.0	6.3	6.4	10.3	0.0	0.0			
LnGrp LOS	A	A			A	A	B					
Approach Vol, veh/h		145			136			163				
Approach Delay, s/veh		6.7			6.4			10.3				
Approach LOS		A			A			B				

Timer	1	2	3	4	5	6	7	8
Assigned Phs		2				6		8
Phs Duration (G+Y+Rc), s		12.8				12.8		11.1
Change Period (Y+Rc), s		5.5				5.5		5.5
Max Green Setting (Gmax), s		39.5				39.5		49.5
Max Q Clear Time (g_c+I1), s		4.3				3.1		5.0
Green Ext Time (p_c), s		3.1				3.1		0.6

Intersection Summary	
HCM 2010 Ctrl Delay	7.9
HCM 2010 LOS	A

Lane Group	EBL	EBT	WBT	WBR	NBT
Lane Configurations					
Traffic Volume (vph)	115	100	90	80	0
Future Volume (vph)	115	100	90	80	0
Turn Type	Perm	NA	NA	Perm	NA
Protected Phases		2	6		8
Permitted Phases	2			6	
Detector Phase	2	2	6	6	8
Switch Phase					
Minimum Initial (s)	5.0	5.0	5.0	5.0	5.0
Minimum Split (s)	23.5	23.5	23.5	23.5	27.5
Total Split (s)	61.0	61.0	61.0	61.0	39.0
Total Split (%)	61.0%	61.0%	61.0%	61.0%	39.0%
Yellow Time (s)	3.5	3.5	3.5	3.5	3.5
All-Red Time (s)	2.0	2.0	2.0	2.0	2.0
Lost Time Adjust (s)	0.0	0.0	0.0	0.0	0.0
Total Lost Time (s)	5.5	5.5	5.5	5.5	5.5
Lead/Lag					
Lead-Lag Optimize?					
Recall Mode	Min	Min	Min	Min	Min

Intersection Summary
Cycle Length: 100
Actuated Cycle Length: 31.4
Natural Cycle: 55
Control Type: Actuated-Uncoordinated

Splits and Phases: 2: I-75 NB Ramps & Bellville Road

Movement	EBL	EBT	EBR	WBL	WBT	WBR	NBL	NBT	NBR	SBL	SBT	SBR
Lane Configurations												
Traffic Volume (veh/h)	115	100	0	0	90	80	65	0	65	0	0	0
Future Volume (veh/h)	115	100	0	0	90	80	65	0	65	0	0	0
Number	5	2	12	1	6	16	3	8	18			
Initial Q (Qb), veh	0	0	0	0	0	0	0	0	0			
Ped-Bike Adj(A_pbT)	1.00		1.00	1.00		1.00	1.00		1.00			
Parking Bus, Adj	1.00	1.00	1.00	1.00	1.00	1.00	1.00	1.00	1.00			
Adj Sat Flow, veh/h/ln	1173	1173	0	0	1267	1267	1900	1407	1900			
Adj Flow Rate, veh/h	142	123	0	0	123	110	71	0	71			
Adj No. of Lanes	1	1	0	0	1	1	0	1	0			
Peak Hour Factor	0.81	0.81	0.81	0.73	0.73	0.73	0.91	0.91	0.91			
Percent Heavy Veh, %	62	62	0	0	50	50	0	35	0			
Cap, veh/h	525	548	0	0	592	503	115	0	115			
Arrive On Green	0.47	0.47	0.00	0.00	0.47	0.47	0.18	0.00	0.18			
Sat Flow, veh/h	719	1173	0	0	1267	1077	632	0	632			
Grp Volume(v), veh/h	142	123	0	0	123	110	142	0	0			
Grp Sat Flow(s),veh/h/ln	719	1173	0	0	1267	1077	1264	0	0			
Q Serve(g_s), s	4.6	2.0	0.0	0.0	1.8	1.9	3.2	0.0	0.0			
Cycle Q Clear(g_c), s	6.4	2.0	0.0	0.0	1.8	1.9	3.2	0.0	0.0			
Prop In Lane	1.00		0.00	0.00		1.00	0.50		0.50			
Lane Grp Cap(c), veh/h	525	548	0	0	592	503	230	0	0			
V/C Ratio(X)	0.27	0.22	0.00	0.00	0.21	0.22	0.62	0.00	0.00			
Avail Cap(c_a), veh/h	1460	2073	0	0	2239	1903	1349	0	0			
HCM Platoon Ratio	1.00	1.00	1.00	1.00	1.00	1.00	1.00	1.00	1.00			
Upstream Filter(I)	1.00	1.00	0.00	0.00	1.00	1.00	1.00	0.00	0.00			
Uniform Delay (d), s/veh	6.8	5.0	0.0	0.0	4.9	5.0	11.8	0.0	0.0			
Incr Delay (d2), s/veh	0.3	0.2	0.0	0.0	0.2	0.2	2.7	0.0	0.0			
Initial Q Delay(d3),s/veh	0.0	0.0	0.0	0.0	0.0	0.0	0.0	0.0	0.0			
%ile BackOfQ(95%),veh/ln	1.6	1.2	0.0	0.0	1.2	1.0	2.3	0.0	0.0			
LnGrp Delay(d),s/veh	7.1	5.2	0.0	0.0	5.1	5.2	14.5	0.0	0.0			
LnGrp LOS	A	A			A	A	B					
Approach Vol, veh/h		265			233			142				
Approach Delay, s/veh		6.2			5.1			14.5				
Approach LOS		A			A			B				

Timer	1	2	3	4	5	6	7	8
Assigned Phs		2				6		8
Phs Duration (G+Y+Rc), s		20.2				20.2		11.2
Change Period (Y+Rc), s		5.5				5.5		5.5
Max Green Setting (Gmax), s		55.5				55.5		33.5
Max Q Clear Time (g_c+I1), s		8.4				3.9		5.2
Green Ext Time (p_c), s		6.3				6.4		0.5

Intersection Summary	
HCM 2010 Ctrl Delay	7.7
HCM 2010 LOS	A

Lane Group	EBL	EBT	WBT	WBR	NBT
Lane Configurations					
Traffic Volume (vph)	100	130	105	105	0
Future Volume (vph)	100	130	105	105	0
Turn Type	Perm	NA	NA	Perm	NA
Protected Phases		2	6		8
Permitted Phases	2			6	
Detector Phase	2	2	6	6	8
Switch Phase					
Minimum Initial (s)	5.0	5.0	5.0	5.0	5.0
Minimum Split (s)	23.5	23.5	23.5	23.5	27.5
Total Split (s)	45.0	45.0	45.0	45.0	55.0
Total Split (%)	45.0%	45.0%	45.0%	45.0%	55.0%
Yellow Time (s)	3.5	3.5	3.5	3.5	3.5
All-Red Time (s)	2.0	2.0	2.0	2.0	2.0
Lost Time Adjust (s)	0.0	0.0	0.0	0.0	0.0
Total Lost Time (s)	5.5	5.5	5.5	5.5	5.5
Lead/Lag					
Lead-Lag Optimize?					
Recall Mode	Min	Min	Min	Min	Min

Intersection Summary
Cycle Length: 100
Actuated Cycle Length: 32.8
Natural Cycle: 55
Control Type: Actuated-Uncoordinated

Splits and Phases: 2: I-75 NB Ramps & Bellville Road

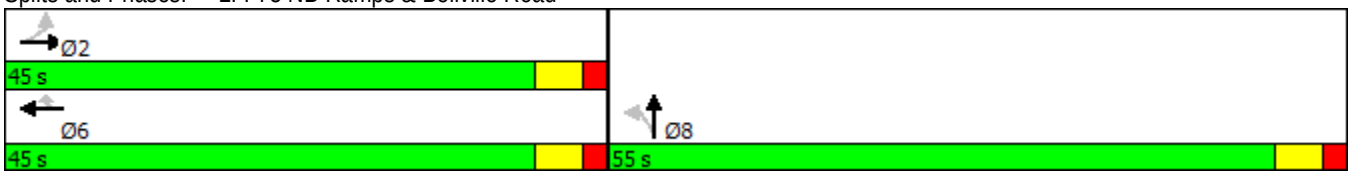

Movement	EBL	EBT	EBR	WBL	WBT	WBR	NBL	NBT	NBR	SBL	SBT	SBR
Lane Configurations												
Traffic Volume (veh/h)	100	130	0	0	105	105	80	0	115	0	0	0
Future Volume (veh/h)	100	130	0	0	105	105	80	0	115	0	0	0
Number	5	2	12	1	6	16	3	8	18			
Initial Q (Qb), veh	0	0	0	0	0	0	0	0	0			
Ped-Bike Adj(A_pbT)	1.00		1.00	1.00		1.00	1.00		1.00			
Parking Bus, Adj	1.00	1.00	1.00	1.00	1.00	1.00	1.00	1.00	1.00			
Adj Sat Flow, veh/h/ln	1267	1267	0	0	1301	1301	1900	1301	1900			
Adj Flow Rate, veh/h	104	135	0	0	109	109	108	0	155			
Adj No. of Lanes	1	1	0	0	1	1	0	1	0			
Peak Hour Factor	0.96	0.96	0.96	0.96	0.96	0.96	0.74	0.74	0.74			
Percent Heavy Veh, %	50	50	0	0	46	46	0	46	0			
Cap, veh/h	465	476	0	0	489	416	141	0	202			
Arrive On Green	0.38	0.38	0.00	0.00	0.38	0.38	0.30	0.00	0.30			
Sat Flow, veh/h	788	1267	0	0	1301	1106	475	0	682			
Grp Volume(v), veh/h	104	135	0	0	109	109	263	0	0			
Grp Sat Flow(s),veh/h/ln	788	1267	0	0	1301	1106	1157	0	0			
Q Serve(g_s), s	3.5	2.5	0.0	0.0	1.9	2.3	6.9	0.0	0.0			
Cycle Q Clear(g_c), s	5.4	2.5	0.0	0.0	1.9	2.3	6.9	0.0	0.0			
Prop In Lane	1.00		0.00	0.00		1.00	0.41		0.59			
Lane Grp Cap(c), veh/h	465	476	0	0	489	416	344	0	0			
V/C Ratio(X)	0.22	0.28	0.00	0.00	0.22	0.26	0.77	0.00	0.00			
Avail Cap(c_a), veh/h	1095	1489	0	0	1530	1300	1705	0	0			
HCM Platoon Ratio	1.00	1.00	1.00	1.00	1.00	1.00	1.00	1.00	1.00			
Upstream Filter(I)	1.00	1.00	0.00	0.00	1.00	1.00	1.00	0.00	0.00			
Uniform Delay (d), s/veh	9.0	7.3	0.0	0.0	7.1	7.3	10.7	0.0	0.0			
Incr Delay (d2), s/veh	0.2	0.3	0.0	0.0	0.2	0.3	3.6	0.0	0.0			
Initial Q Delay(d3),s/veh	0.0	0.0	0.0	0.0	0.0	0.0	0.0	0.0	0.0			
%ile BackOfQ(95%),veh/ln	1.4	1.6	0.0	0.0	1.3	1.3	4.6	0.0	0.0			
LnGrp Delay(d),s/veh	9.2	7.7	0.0	0.0	7.4	7.6	14.3	0.0	0.0			
LnGrp LOS	A	A			A	A	B					
Approach Vol, veh/h		239			218			263				
Approach Delay, s/veh		8.3			7.5			14.3				
Approach LOS		A			A			B				

Timer	1	2	3	4	5	6	7	8
Assigned Phs		2				6		8
Phs Duration (G+Y+Rc), s		18.1				18.1		15.5
Change Period (Y+Rc), s		5.5				5.5		5.5
Max Green Setting (Gmax), s		39.5				39.5		49.5
Max Q Clear Time (g_c+I1), s		7.4				4.3		8.9
Green Ext Time (p_c), s		5.2				5.3		1.0

Intersection Summary	
HCM 2010 Ctrl Delay	10.3
HCM 2010 LOS	B

Appendix J. Left Turn Analysis AM and PM

Future Traffic Count Summary Sheet

Peak Hour Count (AM)

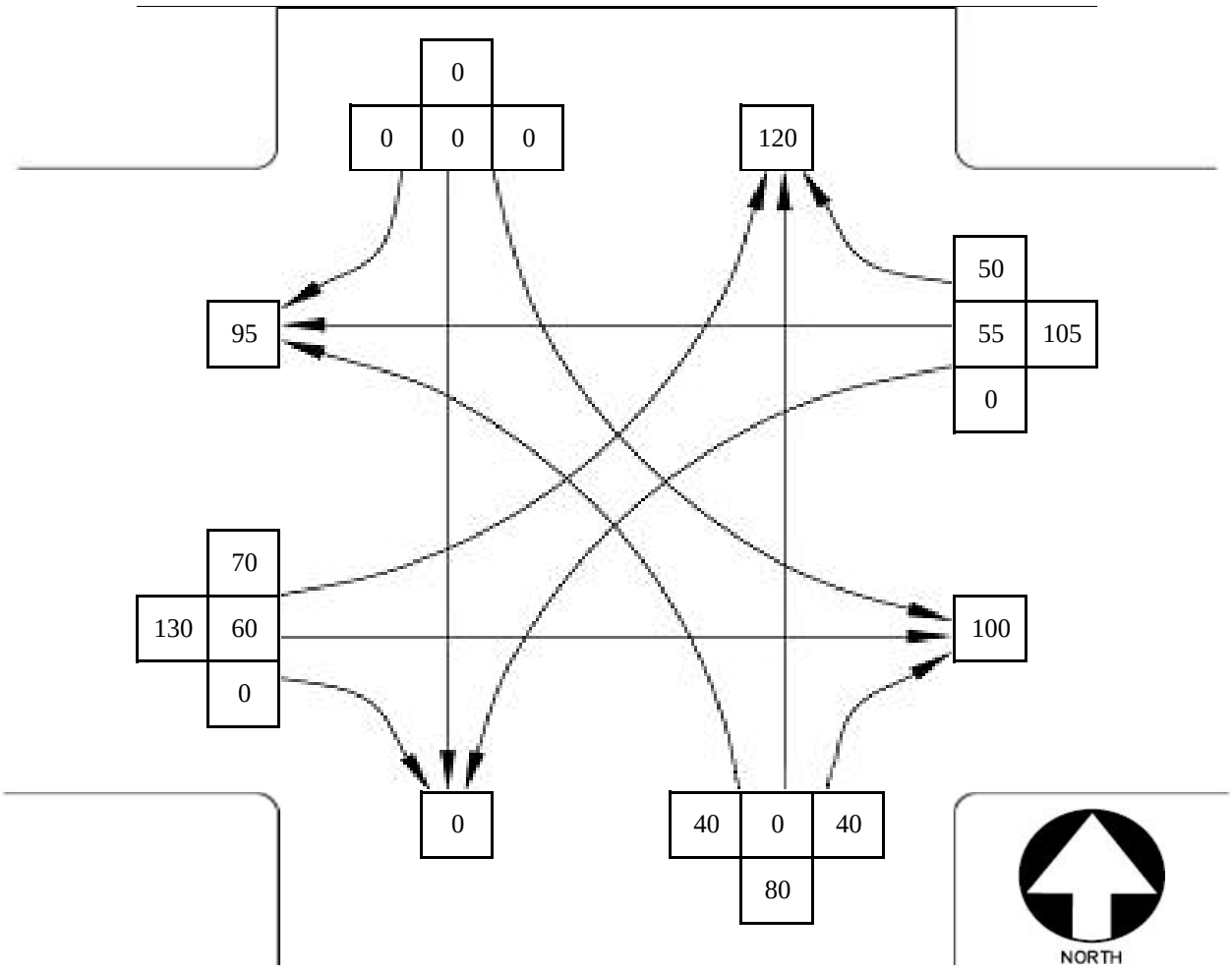

Conflicting Movements	Through Volume (V_o)	Left Turn Volume (V_{lt})	Opposing Lanes (N_o)	Cross-Product ($V_o \times V_{lt} \div N_o$)	Cross-Product Warrant?	Peak Volume Warrant?	Turn Phase Recommended?
~~NBL & SBT~~	~~0~~	~~40~~	~~1~~	~~0~~	~~NO~~	~~NO~~	~~NO~~
~~SBL & NBT~~	~~0~~	~~0~~	~~1~~	~~0~~	~~NO~~	~~NO~~	~~NO~~
EBL & WBT	55	70	1	3,850	NO	NO	NO
~~WBL & EBT~~	~~60~~	~~0~~	~~1~~	~~0~~	~~NO~~	~~NO~~	~~NO~~

LEFT TURN CRITERIA - AM PEAK HOUR

JACOBS ®

Future Traffic Count Summary Sheet

Peak Hour Count (PM)

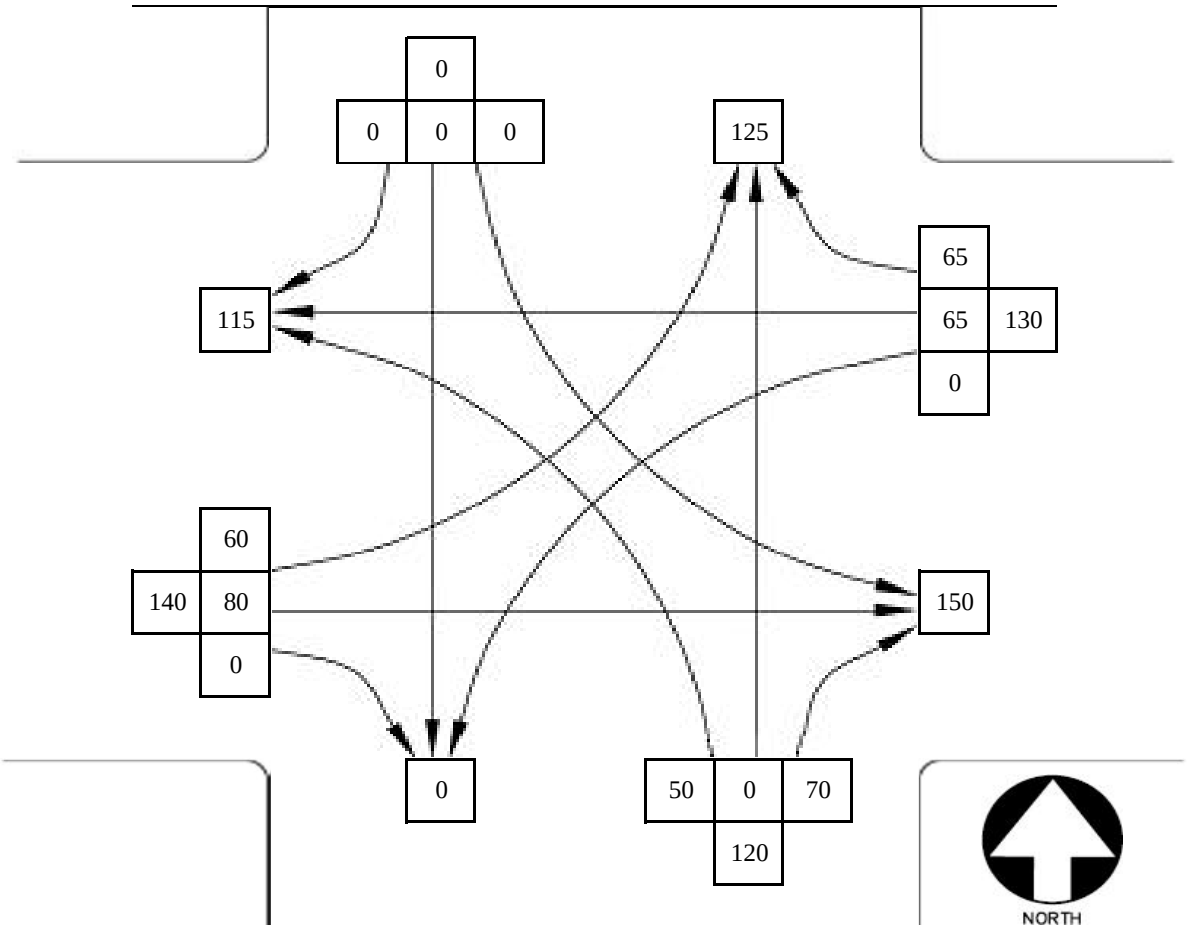

Conflicting Movements	Through Volume (V_o)	Left Turn Volume (V_{lt})	Opposing Lanes (N_o)	Cross-Product ($V_o \times V_{lt} \div N_o$)	Cross-Product Warrant?	Peak Volume Warrant?	Turn Phase Recommended?
~~NBL & SBT~~	~~0~~	~~50~~	~~1~~	~~0~~	~~NO~~	~~NO~~	~~NO~~
~~SBL & NBT~~	~~0~~	~~0~~	~~1~~	~~0~~	~~NO~~	~~NO~~	~~NO~~
EBL & WBT	65	60	1	3,900	NO	NO	NO
~~WBL & EBT~~	~~80~~	~~0~~	~~1~~	~~0~~	~~NO~~	~~NO~~	~~NO~~

LEFT TURN CRITERIA - PM PEAK HOUR

JACOBS ®

Future Traffic Count Summary Sheet

Peak Hour Count (AM)

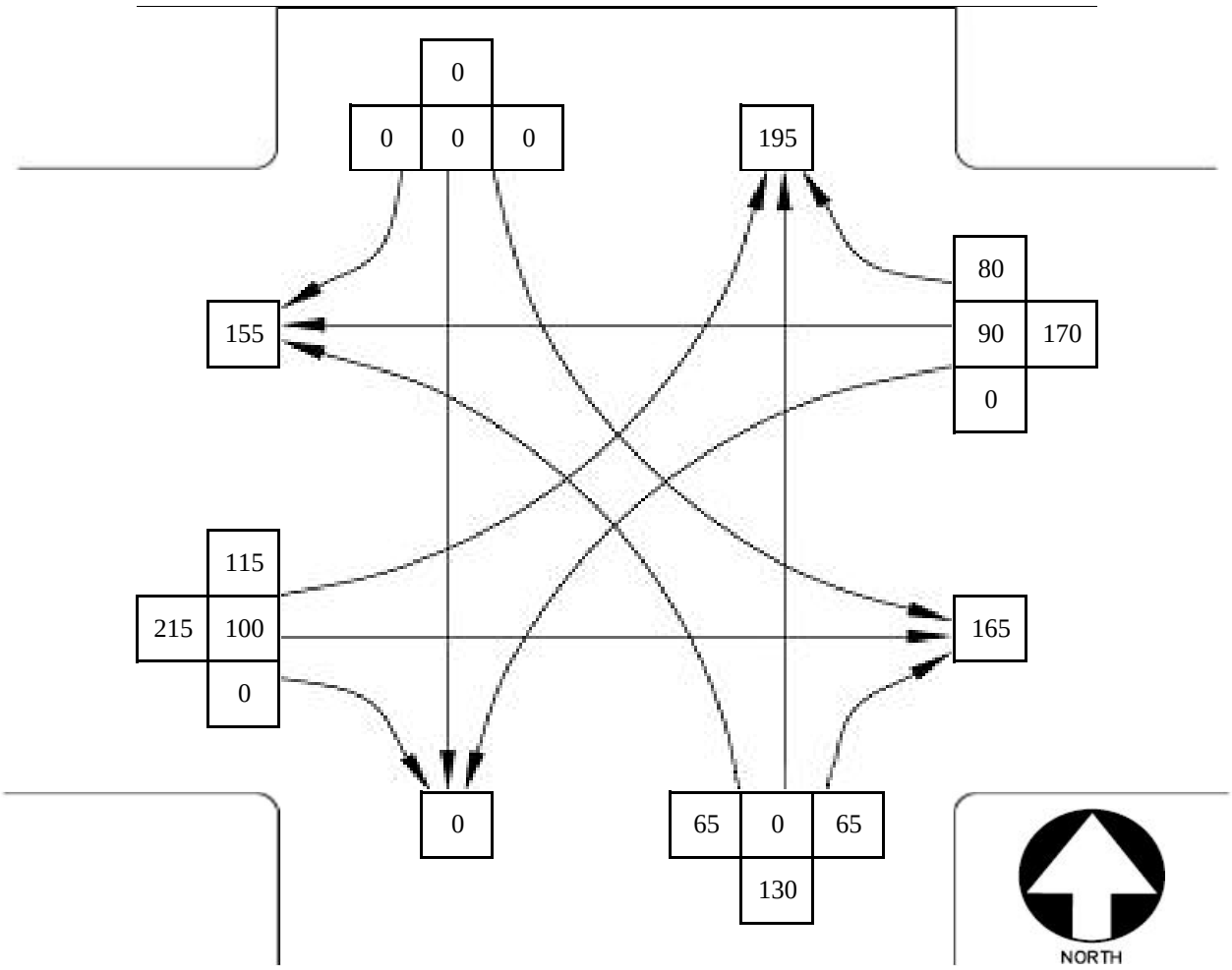

Conflicting Movements	Through Volume (V_o)	Left Turn Volume (V_{lt})	Opposing Lanes (N_o)	Cross-Product ($V_o \times V_{lt} \div N_o$)	Cross-Product Warrant?	Peak Volume Warrant?	Turn Phase Recommended?
~~NBL & SBT~~	~~0~~	~~65~~	~~1~~	~~0~~	~~NO~~	~~NO~~	~~NO~~
~~SBL & NBT~~	~~0~~	~~0~~	~~1~~	~~0~~	~~NO~~	~~NO~~	~~NO~~
EBL & WBT	90	115	1	10,350	NO	FYA lag only	FYA lag only
~~WBL & EBT~~	~~100~~	~~0~~	~~1~~	~~0~~	~~NO~~	~~NO~~	~~NO~~

LEFT TURN CRITERIA - AM PEAK HOUR

JACOBS ®

Future Traffic Count Summary Sheet

Peak Hour Count (PM)

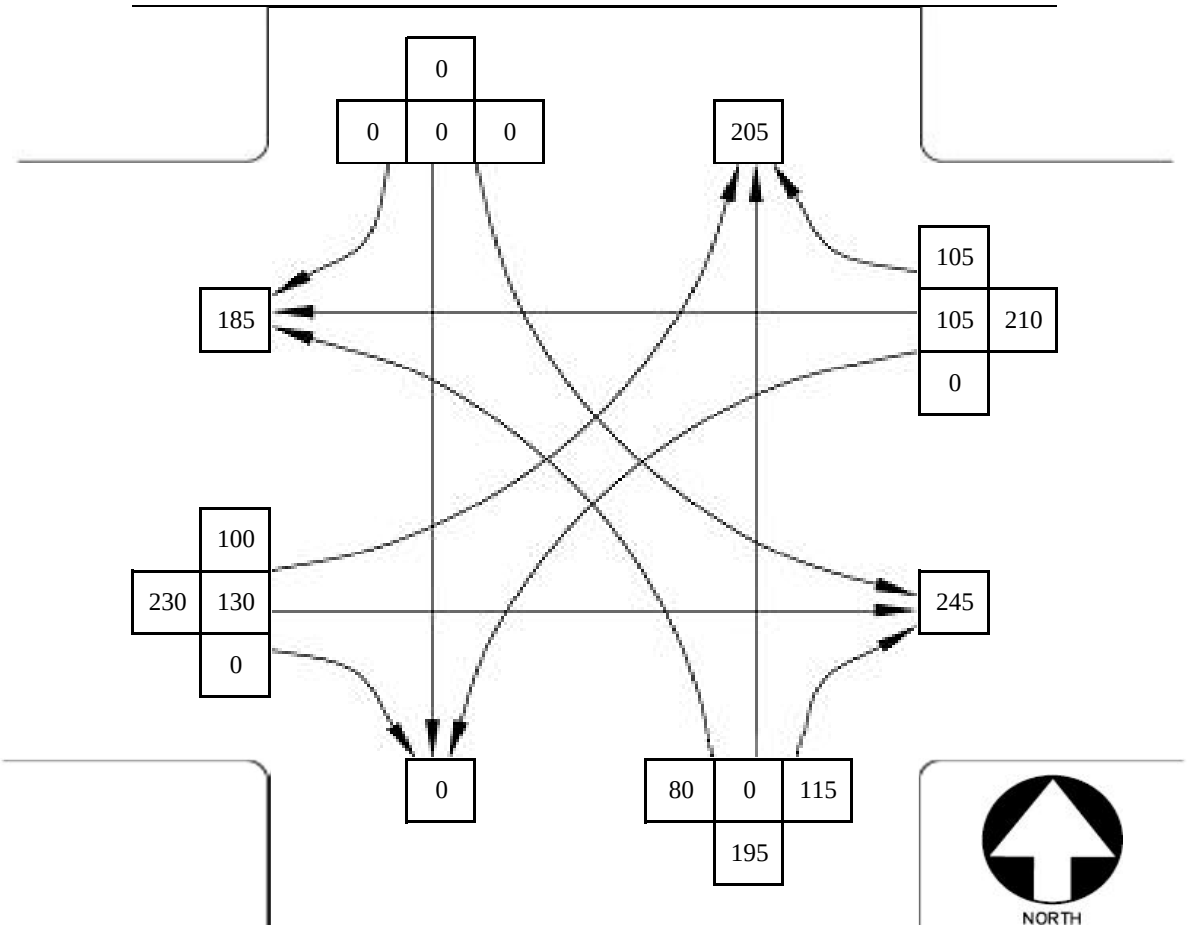

Conflicting Movements	Through Volume (V_o)	Left Turn Volume (V_{lt})	Opposing Lanes (N_o)	Cross-Product ($V_o \times V_{lt} \div N_o$)	Cross-Product Warrant?	Peak Volume Warrant?	Turn Phase Recommended?
~~NBL & SBT~~	~~0~~	~~80~~	~~1~~	~~0~~	~~NO~~	~~FYA lag only~~	~~FYA lag only~~
~~SBL & NBT~~	~~0~~	~~0~~	~~1~~	~~0~~	~~NO~~	~~NO~~	~~NO~~
EBL & WBT	105	100	1	10,500	NO	FYA lag only	FYA lag only
~~WBL & EBT~~	~~0~~	~~130~~	~~1~~	~~0~~	~~NO~~	~~YES~~	~~YES~~

LEFT TURN CRITERIA - PM PEAK HOUR

JACOBS ®

Appendix K. Roundabout Analysis

General & Site Information

v3.0

Analyst:	GKW
Agency/Co:	Jacobs Engineering
Date:	11/28/2016
Project or PI#:	0007386
Year, Peak Hour:	2022 AM
County/District:	Lowndes County
Intersection Name:	CR 174 (Bellville Road) at I-75 Northbound Ramps

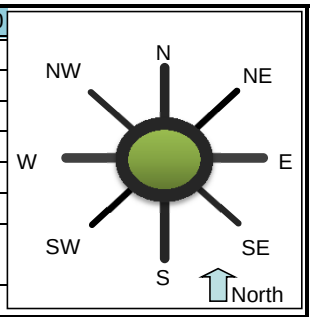

Volumes

		Entry Legs (FROM)							
		N (1)	NE (2)	E (3)	SE (4)	S (5)	SW (6)	W (7)	NW (8)
Exit Legs (TO)	N (1), vph			50				70	
	NE (2), vph								
	E (3), vph					40		60	
	SE (4), vph								
	S (5), vph								
	SW (6), vph								
	W (7), vph			55		40			
	NW (8), vph								
Output	Total Vehicles	0	0	105	0	80	0	130	0

Volume Characteristics	N	NE	E	SE	S	SW	W	NW
% Cars	100.0%	100.0%	50.0%	100.0%	65.0%	100.0%	38.0%	100.0%
% Heavy Vehicles	0.0%	0.0%	50.0%	0.0%	35.0%	0.0%	62.0%	0.0%
% Bicycle	0.0%	0.0%	0.0%	0.0%	0.0%	0.0%	0.0%	0.0%
# of Pedestrians (ped/hr)	0	0	0	0	0	0	0	0
PHF	*0.95*	*0.95*	*0.73*	*0.95*	*0.91*	*0.95*	*0.81*	*0.95*
F_{HV}	1.000	1.000	0.667	1.000	0.741	1.000	0.617	1.000
F_{ped}	1.000	1.000	1.000	1.000	1.000	1.000	1.000	1.000

Entry/Conflicting Flows	N	NE	E	SE	S	SW	W	NW
Flow to Leg # N (1), pcu/h	0	0	103	0	0	0	140	0
NE (2), pcu/h	0	0	0	0	0	0	0	0
E (3), pcu/h	0	0	0	0	59	0	120	0
SE (4), pcu/h	0	0	0	0	0	0	0	0
S (5), pcu/h	0	0	0	0	0	0	0	0
SW (6), pcu/h	0	0	0	0	0	0	0	0
W (7), pcu/h	0	0	113	0	59	0	0	0
NW (8), pcu/h	0	0	0	0	0	0	0	0
Entry flow, pcu/h	0	0	216	0	119	0	260	0
Conflicting flow, pcu/h	0	0	199	0	260	0	0	0

Results: Approach Measures of Effectiveness

HCM 6th Edition	N	NE	E	SE	S	SW	W	NW
Entry Capacity, vph	NA	NA	751	NA	784	NA	852	NA
Entry Flow Rates, vph	NA	NA	144	NA	88	NA	160	NA
V/C ratio			0.19		0.11		0.19	
Control Delay, sec/pcu			7		6		6	
LOS			A		A		A	
95th % Queue (ft)			26		13		28	

Notes:

v3.0

Unit Legend:
vph = vehicles per hour
PHF = peak hour factor
F_{HV} = heavy vehicle factor
pcu = passenger car unit

Bypass Lane Merge Point Analysis (if applicable)

General & Site Information

v3.0

Analyst:	GKW
Agency/Co:	Jacobs Engineering
Date:	11/28/2016
Project or PI#:	0007386
Year, Peak Hour:	2022 PM
County/District:	Lowndes County
Intersection Name:	CR 174 (Bellville Road) at I-75 Northbound Ramps

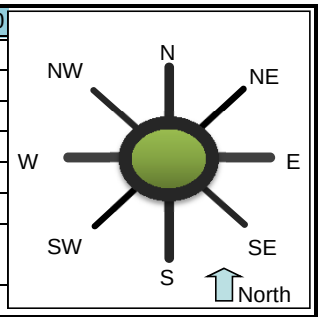

Volumes		Entry Legs (FROM) N (1)	NE (2)	E (3)	SE (4)	S (5)	SW (6)	W (7)	NW (8)
Exit Legs (TO)	N (1), vph			65				60	
	NE (2), vph								
	E (3), vph					50		80	
	SE (4), vph								
	S (5), vph								
	SW (6), vph								
	W (7), vph			65		70			
	NW (8), vph								
Output	Total Vehicles	0	0	130	0	120	0	140	0

Volume Characteristics	N	NE	E	SE	S	SW	W	NW
% Cars	100.0%	100.0%	54.0%	100.0%	54.0%	100.0%	49.5%	100.0%
% Heavy Vehicles	0.0%	0.0%	46.0%	0.0%	46.0%	0.0%	50.5%	0.0%
% Bicycle	0.0%	0.0%	0.0%	0.0%	0.0%	0.0%	0.0%	0.0%
# of Pedestrians (ped/hr)	0	0	0	0	0	0	0	0
PHF	*0.95*	*0.95*	*0.96*	*0.95*	*0.74*	*0.95*	*0.96*	*0.95*
F_{HV}	1.000	1.000	0.685	1.000	0.685	1.000	0.664	1.000
F_{ped}	1.000	1.000	1.000	1.000	1.000	1.000	1.000	1.000

Entry/Conflicting Flows	N	NE	E	SE	S	SW	W	NW
Flow to Leg # N (1), pcu/h	0	0	99	0	0	0	94	0
NE (2), pcu/h	0	0	0	0	0	0	0	0
E (3), pcu/h	0	0	0	0	99	0	125	0
SE (4), pcu/h	0	0	0	0	0	0	0	0
S (5), pcu/h	0	0	0	0	0	0	0	0
SW (6), pcu/h	0	0	0	0	0	0	0	0
W (7), pcu/h	0	0	99	0	138	0	0	0
NW (8), pcu/h	0	0	0	0	0	0	0	0
Entry flow, pcu/h	0	0	198	0	237	0	219	0
Conflicting flow, pcu/h	0	0	232	0	219	0	0	0

Results: Approach Measures of Effectiveness

HCM 6th Edition	N	NE	E	SE	S	SW	W	NW
Entry Capacity, vph	NA	NA	746	NA	756	NA	917	NA
Entry Flow Rates, vph	NA	NA	135	NA	162	NA	146	NA
V/C ratio			0.18		0.21		0.16	
Control Delay, sec/pcu			7		7		5	
LOS			A		A		A	
95th % Queue (ft)			24		30		21	

Notes:

v3.0

Unit Legend:
vph = vehicles per hour
PHF = peak hour factor
F_{HV} = heavy vehicle factor
pcu = passenger car unit

Bypass Lane Merge Point Analysis (if applicable)

General & Site Information

v3.0

Analyst:	GKW
Agency/Co:	Jacobs Engineering
Date:	11/28/2016
Project or PI#:	0007386
Year, Peak Hour:	2042 AM
County/District:	Lowndes County
Intersection Name:	CR 174 (Bellville Road) at I-75 Northbound Ramps

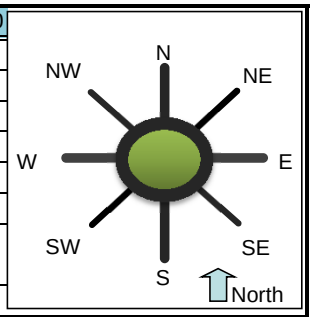

Volumes		Entry Legs (FROM)							
		N (1)	NE (2)	E (3)	SE (4)	S (5)	SW (6)	W (7)	NW (8)
Exit Legs (TO)	N (1), vph			115				80	
	NE (2), vph								
	E (3), vph					65		90	
	SE (4), vph								
	S (5), vph								
	SW (6), vph								
	W (7), vph			100		65			
	NW (8), vph								
Output	Total Vehicles	0	0	215	0	130	0	170	0

Volume Characteristics	N	NE	E	SE	S	SW	W	NW
% Cars	100.0%	100.0%	50.0%	100.0%	65.0%	100.0%	38.0%	100.0%
% Heavy Vehicles	0.0%	0.0%	50.0%	0.0%	35.0%	0.0%	62.0%	0.0%
% Bicycle	0.0%	0.0%	0.0%	0.0%	0.0%	0.0%	0.0%	0.0%
# of Pedestrians (ped/hr)	0	0	0	0	0	0	0	0
PHF	*0.95*	*0.95*	*0.73*	*0.95*	*0.91*	*0.95*	*0.81*	*0.95*
F_{HV}	1.000	1.000	0.667	1.000	0.741	1.000	0.617	1.000
F_{ped}	1.000	1.000	1.000	1.000	1.000	1.000	1.000	1.000

Entry/Conflicting Flows	N	NE	E	SE	S	SW	W	NW
Flow to Leg # N (1), pcu/h	0	0	236	0	0	0	160	0
NE (2), pcu/h	0	0	0	0	0	0	0	0
E (3), pcu/h	0	0	0	0	96	0	180	0
SE (4), pcu/h	0	0	0	0	0	0	0	0
S (5), pcu/h	0	0	0	0	0	0	0	0
SW (6), pcu/h	0	0	0	0	0	0	0	0
W (7), pcu/h	0	0	205	0	96	0	0	0
NW (8), pcu/h	0	0	0	0	0	0	0	0
Entry flow, pcu/h	0	0	442	0	193	0	340	0
Conflicting flow, pcu/h	0	0	256	0	340	0	0	0

Results: Approach Measures of Effectiveness

HCM 6th Edition	N	NE	E	SE	S	SW	W	NW
Entry Capacity, vph	NA	NA	708	NA	723	NA	852	NA
Entry Flow Rates, vph	NA	NA	295	NA	143	NA	210	NA
V/C ratio			0.42		0.20		0.25	
Control Delay, sec/pcu			11		7		7	
LOS			B		A		A	
95th % Queue (ft)			77		25		39	

Notes:

v3.0

Unit Legend:
vph = vehicles per hour
PHF = peak hour factor
F_{HV} = heavy vehicle factor
pcu = passenger car unit

Bypass Lane Merge Point Analysis (if applicable)

General & Site Information

v3.0

Analyst:	GKW
Agency/Co:	Jacobs Engineering
Date:	11/28/2016
Project or PI#:	0007386
Year, Peak Hour:	2042 PM
County/District:	Lowndes County
Intersection Name:	CR 174 (Bellville Road) at I-75 Northbound Ramps

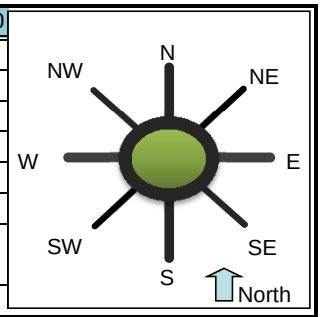

Volumes		Entry Legs (FROM) N (1)	NE (2)	E (3)	SE (4)	S (5)	SW (6)	W (7)	NW (8)
Exit Legs (TO)	N (1), vph			105				100	
	NE (2), vph								
	E (3), vph					115		130	
	SE (4), vph								
	S (5), vph								
	SW (6), vph								
	W (7), vph			105		80			
	NW (8), vph								
Output	Total Vehicles	0	0	210	0	195	0	230	0

Volume Characteristics	N	NE	E	SE	S	SW	W	NW
% Cars	100.0%	100.0%	54.0%	100.0%	54.0%	100.0%	49.5%	100.0%
% Heavy Vehicles	0.0%	0.0%	46.0%	0.0%	46.0%	0.0%	50.5%	0.0%
% Bicycle	0.0%	0.0%	0.0%	0.0%	0.0%	0.0%	0.0%	0.0%
# of Pedestrians (ped/hr)	0	0	0	0	0	0	0	0
PHF	*0.95*	*0.95*	*0.96*	*0.95*	*0.74*	*0.95*	*0.96*	*0.95*
F_{HV}	1.000	1.000	0.685	1.000	0.685	1.000	0.664	1.000
F_{ped}	1.000	1.000	1.000	1.000	1.000	1.000	1.000	1.000

Entry/Conflicting Flows	N	NE	E	SE	S	SW	W	NW
Flow to Leg # N (1), pcu/h	0	0	160	0	0	0	157	0
NE (2), pcu/h	0	0	0	0	0	0	0	0
E (3), pcu/h	0	0	0	0	227	0	204	0
SE (4), pcu/h	0	0	0	0	0	0	0	0
S (5), pcu/h	0	0	0	0	0	0	0	0
SW (6), pcu/h	0	0	0	0	0	0	0	0
W (7), pcu/h	0	0	160	0	158	0	0	0
NW (8), pcu/h	0	0	0	0	0	0	0	0
Entry flow, pcu/h	0	0	319	0	385	0	361	0
Conflicting flow, pcu/h	0	0	315	0	361	0	0	0

Results: Approach Measures of Effectiveness

HCM 6th Edition	N	NE	E	SE	S	SW	W	NW
Entry Capacity, vph	NA	NA	686	NA	654	NA	917	NA
Entry Flow Rates, vph	NA	NA	219	NA	264	NA	240	NA
V/C ratio			0.32		0.40		0.26	
Control Delay, sec/pcu			9		11		7	
LOS			A		B		A	
95th % Queue (ft)			50		71		39	

Notes:

v3.0

Unit Legend:
vph = vehicles per hour
PHF = peak hour factor
F_{HV} = heavy vehicle factor
pcu = passenger car unit

Bypass Lane Merge Point Analysis (if applicable)

CR 274 (Bellville Road) at I-75 SB Ramps

GDOT

Signal Warrant Analysis

November 29, 2016

PI 0007386

CR 274 (Bellville Road) at I-75 SB Ramps

Project No:	CB-506050
Document Title:	Signal Warrant Analysis
Document No.:	1
Revision:	-
Date:	November 29, 2016
Client Name:	GDOT
Client No:	PI 0007386
Project Manager:	Derrick Vincent, PE
Author:	Geoff K. Warr, PE, PTOE
File Name:	\\ATLFIL22\Projects\CB-506050 Lowndes Co\600 DISCIPLINE FILES\610 Studies & Reports\Traffic (AAD)\2016 Update\Reports\6. Signal Warrant Analysis_WIP\1_Bellville SB Ramps\Doc\CB-056050 Bellville Rd SB Ramps - SWA 11-29-16.docx

Jacobs Engineering Inc.

Ten 10th Street, NW, Suite 1400
Atlanta, Georgia 30309
United States
T +1.404.978.7600
F +1.404.978.7660
www.jacobs.com

© Copyright 2016 Jacobs Engineering Inc. The concepts and information contained in this document are the property of Jacobs. Use or copying of this document in whole or in part without the written permission of Jacobs constitutes an infringement of copyright.

Limitation: This report has been prepared on behalf of, and for the exclusive use of Jacobs' Client, and is subject to, and issued in accordance with, the provisions of the contract between Jacobs and the Client. Jacobs accepts no liability or responsibility whatsoever for, or in respect of, any use of, or reliance upon, this report by any third party.

Contents

STUDY LOCATION 1
COUNTY 1
REQUESTED BY 1
REASON FOR INVESTIGATION 1
EXISTING LANE GEOMETRY 1
EXISTING TRAFFIC CONTROL 1
VEHICULAR VOLUMES 2
VEHICULAR SPEEDS 4
PEDESTRIAN ACTIVITY 4
PARKING 4
ADJACENT SIGNALIZED INTERSECTIONS 4
SIGHT DISTANCE 4
FUTURE BUILD CONDITIONS 5
CAPACITY ANALYSIS 6
WARRANT ANALYSIS 7
FUTURE DELAY ANALYSIS 8
ROUNDABOUT FEASIBILITY 9
CONCLUSIONS AND RECOMMENDATIONS 10

Tables

Table 1 : Base 2022 Traffic Volumes (I-75 Southbound Ramps at Bellville Road) 3
Table 2 : Design 2042 Traffic Volumes (I-75 Southbound Ramps at Bellville Road) 4
Table 3 : Existing Intersection Delay 6
Table 4 : Base 2022 (I-75 Southbound Ramps at Bellville Road) - Adjusted for Heavy Vehicles 7
Table 5 : Base 2042 (I-75 Southbound Ramps at Bellville Road) - Adjusted for Heavy Vehicles 8
Table 6 : Signal Warrant Analysis Results 8
Table 7 : Future Intersection Delay (Signalized) 9
Table 8 : Future Intersection Delay (Roundabout) 9

STUDY LOCATION

The study intersection is CR 274 (Bellville Road) at the I-75 Southbound Ramps, located in Lowndes County, GA. The study intersection is approximately 1.5 miles north of where I-75 crosses the Georgia / Florida state line. A location map is included in the Appendix A.

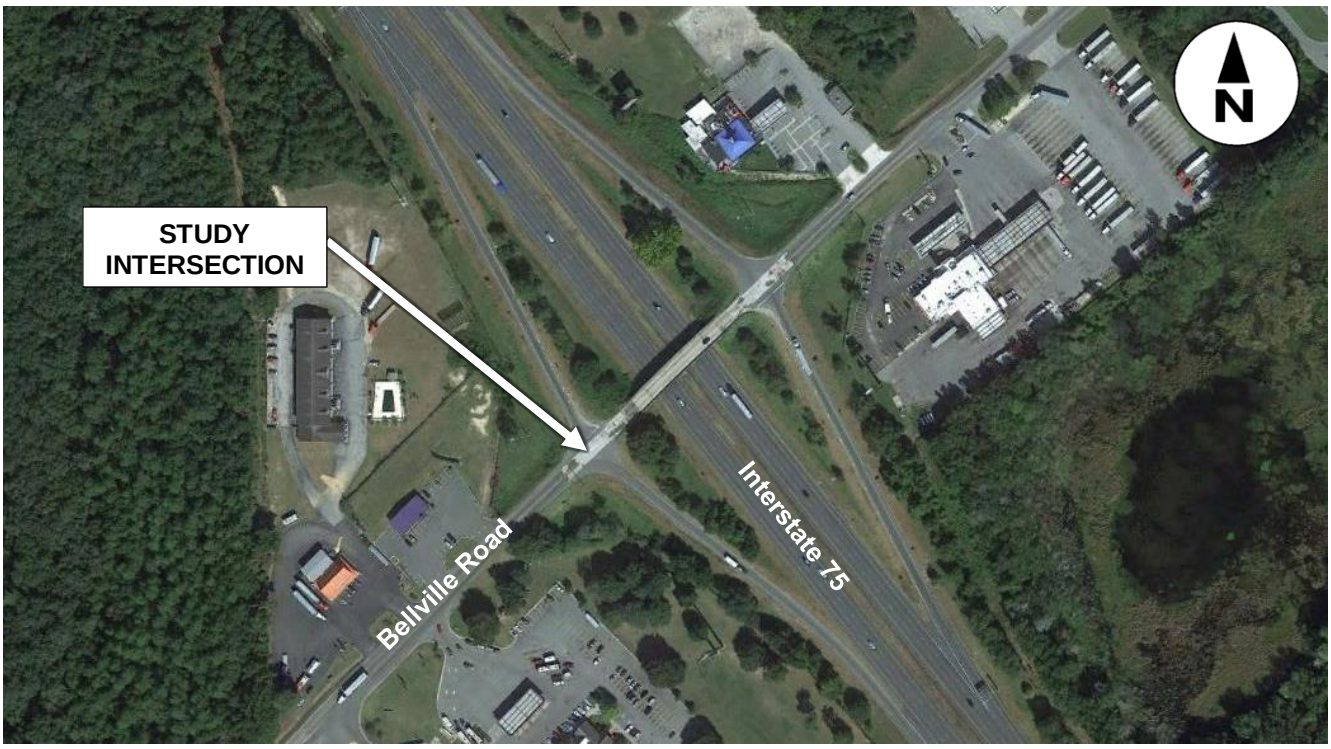

Figure 1 : Aerial of Study Intersection

COUNTY

The intersection is located in Lowndes County.

REQUESTED BY

GDOT has requested this traffic engineering study.

REASON FOR INVESTIGATION

The purpose of this study is to perform an MUTCD Signal Warrant Analysis for the intersection of CR 274 (Bellville Road) at the I-75 Southbound Ramps with the projected volumes after reconfiguration of the interchange ramps.

EXISTING LANE GEOMETRY

CR 274 (Bellville Road) is an east-west, two-lane, undivided roadway. The I-75 Southbound Off-Ramp has a single stop-controlled lane to serve left and right turning movements.

EXISTING TRAFFIC CONTROL

The study location is currently free-flow for CR 274 (Bellville Road) with a stop condition for the I-75 Southbound Off-Ramp.

VEHICULAR VOLUMES

Traffic counts on I-75 and CR 274 (Bellville Road) show a daily traffic volume of 1,885 vehicles per day on the I-75 Southbound Off-Ramp;4,660 vehicles per day on Bellville Road (west of the interchange); and 4,571 vehicles per day on Bellville Road (east of the southbound ramps).

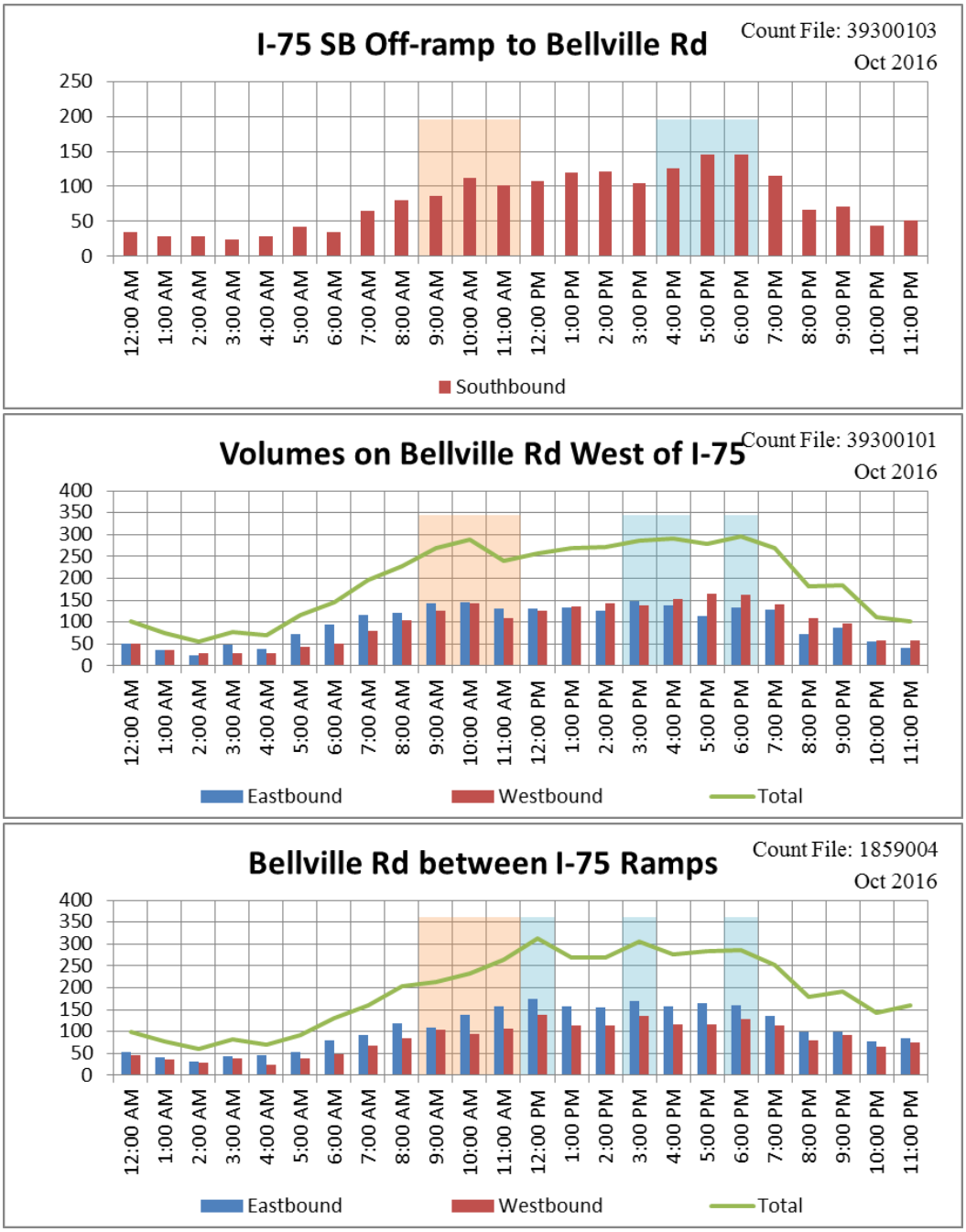

Figure 2 : Hourly Volume for Study Approaches

Twenty-Four hour turning movement volumes were derived from the Base and Design (2022 and 2042) daily turning movement diagrams (Appendix D) and the hourly distributions from the approach counts (Figure 2). The

resulting volumes are shown in Table 1 for the year 2022 and Table 2 for the year 2042. Values were rounded to the nearest five vehicles for each hourly volume.

Table 1 : Base 2022 Traffic Volumes (I-75 Southbound Ramps at Bellville Road)

Approach	NORTHBOUND NA			SOUTHBOUND I-75 SB Off-Ramp			EASTBOUND Bellville Road			WESTBOUND Bellville Road		
Time / Movement	L	T	R	L	T	R	L	T	R	L	T	R
Midnight - 1:00 a.m.	-	-	-	20	0	25	-	35	25	20	30	-
1:00 a.m. - 2:00 a.m.	-	-	-	15	0	20	-	25	15	15	25	-
2:00 a.m. - 3:00 a.m.	-	-	-	15	0	20	-	15	10	10	20	-
3:00 a.m. - 4:00 a.m.	-	-	-	10	0	15	-	30	20	15	25	-
4:00 a.m. - 5:00 a.m.	-	-	-	15	0	20	-	25	20	10	15	-
5:00 a.m. - 6:00 a.m.	-	-	-	20	0	30	-	45	35	15	25	-
6:00 a.m. - 7:00 a.m.	-	-	-	20	0	25	-	60	45	20	30	-
7:00 a.m. - 8:00 a.m.	-	-	-	30	0	45	-	75	55	25	45	-
8:00 a.m. - 9:00 a.m.	-	-	-	40	0	55	-	80	55	35	55	-
9:00 a.m. - 10:00 a.m.	-	-	-	45	0	60	-	90	65	40	65	-
10:00 a.m. - 11:00 a.m.	-	-	-	55	0	75	-	95	65	35	60	-
11:00 a.m. - Noon	-	-	-	50	0	70	-	85	60	40	70	-
Noon - 1:00 p.m.	-	-	-	55	0	75	-	85	60	55	85	-
1:00 p.m. - 2:00 p.m.	-	-	-	60	0	80	-	85	60	45	70	-
2:00 p.m. - 3:00 p.m.	-	-	-	60	0	85	-	80	55	45	75	-
3:00 p.m. - 4:00 p.m.	-	-	-	50	0	70	-	95	65	55	85	-
4:00 p.m. - 5:00 p.m.	-	-	-	60	0	85	-	90	60	45	75	-
5:00 p.m. - 6:00 p.m.	-	-	-	70	0	100	-	75	50	45	75	-
6:00 p.m. - 7:00 p.m.	-	-	-	70	0	100	-	85	60	50	80	-
7:00 p.m. - 8:00 p.m.	-	-	-	55	0	80	-	85	60	45	75	-
8:00 p.m. - 9:00 p.m.	-	-	-	30	0	45	-	45	35	30	50	-
9:00 p.m. - 10:00 p.m.	-	-	-	35	0	50	-	55	40	35	60	-
10:00 p.m. - 11:00 p.m.	-	-	-	20	0	30	-	35	25	25	40	-
11:00 p.m. - Midnight	-	-	-	25	0	35	-	25	20	30	45	-

Table 2 : Design 2042 Traffic Volumes (I-75 Southbound Ramps at Bellville Road)

Approach	NORTHBOUND NA			SOUTHBOUND I-75 SB Off-Ramp			EASTBOUND Bellville Road			WESTBOUND Bellville Road		
Time / Movement	L	T	R	L	T	R	L	T	R	L	T	R
Midnight - 1:00 a.m.	-	-	-	30	0	40	-	55	40	30	50	-
1:00 a.m. - 2:00 a.m.	-	-	-	25	0	30	-	40	30	25	40	-
2:00 a.m. - 3:00 a.m.	-	-	-	25	0	30	-	25	20	20	30	-
3:00 a.m. - 4:00 a.m.	-	-	-	20	0	25	-	50	35	25	40	-
4:00 a.m. - 5:00 a.m.	-	-	-	25	0	30	-	40	30	15	25	-
5:00 a.m. - 6:00 a.m.	-	-	-	35	0	50	-	75	55	25	40	-
6:00 a.m. - 7:00 a.m.	-	-	-	30	0	40	-	100	70	30	55	-
7:00 a.m. - 8:00 a.m.	-	-	-	50	0	70	-	125	85	45	70	-
8:00 a.m. - 9:00 a.m.	-	-	-	65	0	90	-	130	90	55	90	-
9:00 a.m. - 10:00 a.m.	-	-	-	70	0	95	-	150	105	65	110	-
10:00 a.m. - 11:00 a.m.	-	-	-	90	0	125	-	155	105	60	100	-
11:00 a.m. - Noon	-	-	-	80	0	115	-	140	95	70	110	-
Noon - 1:00 p.m.	-	-	-	85	0	120	-	140	95	85	145	-
1:00 p.m. - 2:00 p.m.	-	-	-	95	0	130	-	140	100	70	120	-
2:00 p.m. - 3:00 p.m.	-	-	-	100	0	135	-	135	95	75	120	-
3:00 p.m. - 4:00 p.m.	-	-	-	85	0	120	-	155	110	85	145	-
4:00 p.m. - 5:00 p.m.	-	-	-	100	0	140	-	145	100	75	120	-
5:00 p.m. - 6:00 p.m.	-	-	-	115	0	160	-	120	85	75	120	-
6:00 p.m. - 7:00 p.m.	-	-	-	115	0	160	-	140	100	80	130	-
7:00 p.m. - 8:00 p.m.	-	-	-	95	0	130	-	135	95	75	120	-
8:00 p.m. - 9:00 p.m.	-	-	-	55	0	75	-	75	55	50	85	-
9:00 p.m. - 10:00 p.m.	-	-	-	60	0	80	-	90	65	60	95	-
10:00 p.m. - 11:00 p.m.	-	-	-	35	0	50	-	60	40	40	70	-
11:00 p.m. - Midnight	-	-	-	45	0	60	-	45	30	45	80	-

VEHICULAR SPEEDS

Bellville Road is a northeast-southwest, two-lane, undivided roadway with a speed limit of 45 mph and an advisory speed of 35 mph on the bridge over I-75. Bellville Road is classified as a "Rural Major Collector" by GDOT. A ramp speed of 50 mph was used in modeling the I-75 Southbound Ramps.

PEDESTRIAN ACTIVITY

Bellville Road currently lacks pedestrian crossing and sidewalks in the vicinity of the I-75 interchange.

PARKING

No parking is allowed in the vicinity of the study intersection.

ADJACENT SIGNALIZED INTERSECTIONS

There are presently no signalized intersections within a one mile radius of the study intersection.

SIGHT DISTANCE

The AASHTO stopping sight distance requirement is 360 feet along a 45 mph roadway. The AASHTO sight distance requirement for a stop controlled left turn onto a 45 mph roadway (while crossing one lane of traffic) is 500 feet. The existing bridge is constructed on vertical alignment that does not provide the necessary stopping sight distance for the proposed 45 mph design speed, and the narrow shoulders limit the intersection sight distances at the ramp terminals for exiting traffic from both directions.

Figure 3 : Looking Left from I-75 Northbound Off-Ramp

Figure 4 : Looking Left from I-75 Southbound Off-Ramp

FUTURE BUILD CONDITIONS

As part of the I-75 widening project in Lowndes County, GDOT is planning improvements along CR 274/Lake Park-Bellville Road to accommodate the widened I-75 cross section. As part of these improvements, a new bridge is planned. The new bridge will be longer to accommodate future widening of I-75, and will be wider to provide a three-lane facility with a center turn lane for left-turn bay storage. Due to the anticipated amount of traffic at the relocated ramp intersections, GDOT is considering placement of a traffic signal at the I-75 Southbound Ramps.

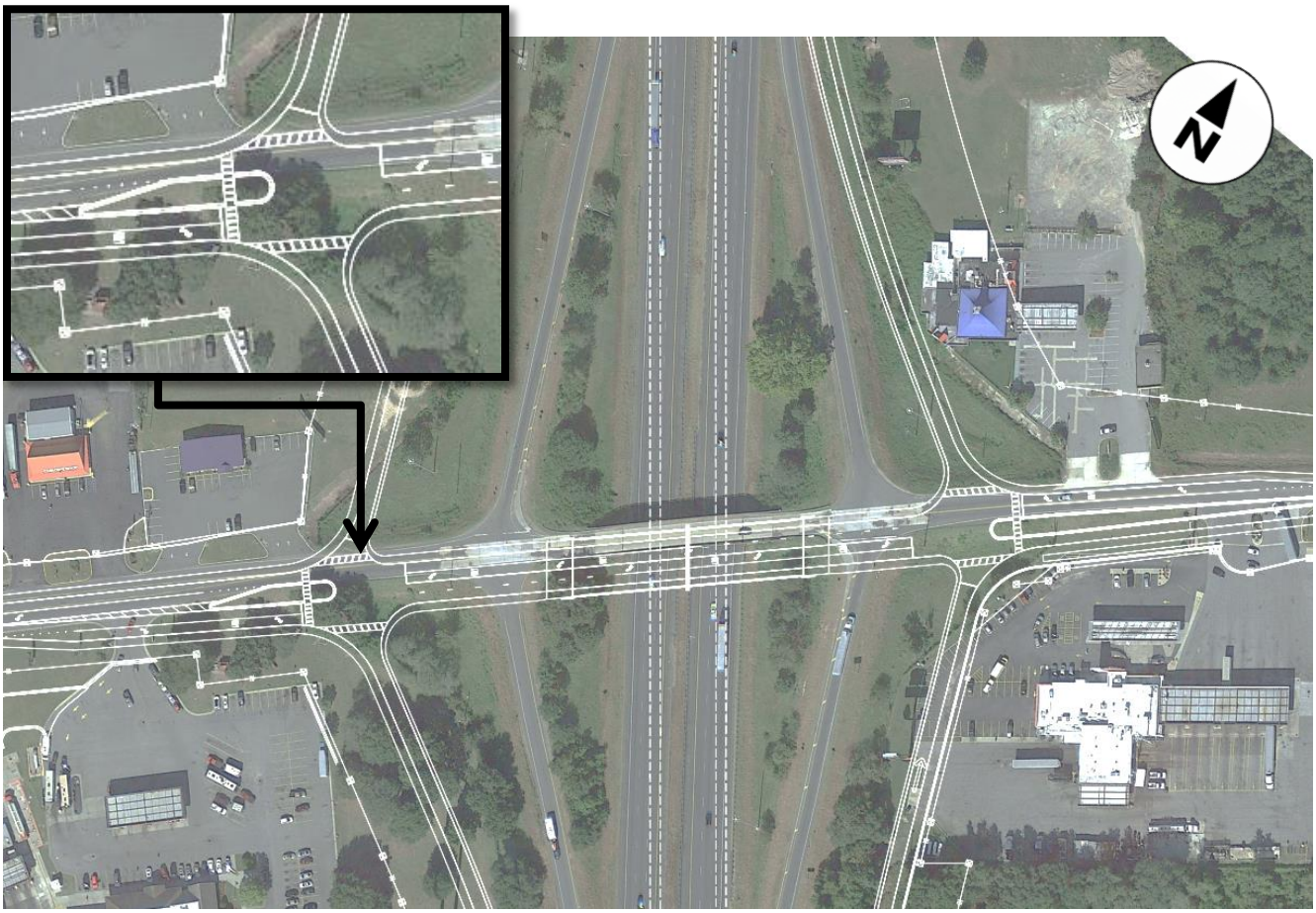

Figure 5 : Build Concept for I-75 Interchange

CAPACITY ANALYSIS

Intersection delay was calculated using the AM and PM peak hour volumes from Appendix D and Synchro software. Results of the existing capacity analysis are shown below in Table 3.

Table 3 : Unsignalized Intersection Delay

Bellville Road at the I-75 Southbound Ramps		No-Build				Build (Unsignalized)			
		AM Peak Hour		PM Peak Hour		AM Peak Hour		PM Peak Hour	
		LOS	Delay	LOS	Delay	LOS	Delay	LOS	Delay
2016	Southbound Approach (I-75 Southbound Ramp)	B	10.3	B	11.3	-	-	-	-
	Westbound Left (Bellville Road)	A	8.1	A	8.1	-	-	-	-
2022	Southbound Approach (I-75 Southbound Ramp)	B	10.5	B	12.0	B	10.4	B	11.7
	Westbound Left (Bellville Road)	A	8.2	A	8.2	A	8.0	A	8.0
2042	Southbound Approach (I-75 Southbound Ramp)	B	12.5	C	18.7	B	12.1	C	16.8
	Westbound Left (Bellville Road)	A	8.7	A	8.7	A	8.3	A	8.2

The result of the intersection capacity analysis indicates that all movements are operating at an acceptable level-of-service in both the AM and PM peak hours.

WARRANT ANALYSIS

The posted speed limit on CR 274 (Bellville Road) is 45 mph. A signal warrant analysis was performed using a main street approach speed of 45 mph with the intersection geometry of a single-lane main street approach and a single-lane side street approach. Because no dedicated turn bays are planned for the I-75 Southbound Off-Ramp, causing left and right turn vehicles to queue together, no right turn reductions were applied to the southbound approach.

The unusually high percentage of heavy vehicles may have an impact on the accuracy of the warrant check conclusion. NCHRP Report 457 (Transportation Research Board, 2001) recommends that, if the heavy vehicle percentage exceeds 5%, the effect of heavy vehicles should be fully evaluated during the engineering study. The Signalized Intersections Informational Guide (FHWA-SA-13-027, 2013) states that, in some cases, larger vehicles can be calculated into Passenger Car Equivalents (PCEs) to account for their additional impacts on the system.

To include allowances for the relatively large gap times that drivers of such vehicles need to cross or enter the major traffic stream safely, a separate scenario was evaluated to adjust truck traffic to passenger car equivalents. The Highway Capacity Manual PCE of 2.0 (HCM 2010, Exhibit 21-10) has been used to develop the adjusted intersection volumes in Table 4 for the year 2022 and Table 5 for the year 2042.

Table 4 : Base 2022 (I-75 Southbound Ramps at Bellville Road) - Adjusted for Heavy Vehicles

Approach	NORTHBOUND NA			SOUTHBOUND I-75 SB Off-Ramp			EASTBOUND Bellville Road			WESTBOUND Bellville Road		
Heavy Vehicle %	NA			55.5%			58.5%			49.0%		
Adjustment Factor	NA			1.555			1.585			1.490		
Time / Movement	L	T	R	L	T	R	L	T	R	L	T	R
Midnight - 1:00 a.m.	-	-	-	30	0	40	-	55	40	30	45	-
1:00 a.m. - 2:00 a.m.	-	-	-	25	0	30	-	40	25	20	35	-
2:00 a.m. - 3:00 a.m.	-	-	-	25	0	30	-	25	15	15	30	-
3:00 a.m. - 4:00 a.m.	-	-	-	15	0	25	-	50	30	20	35	-
4:00 a.m. - 5:00 a.m.	-	-	-	25	0	30	-	40	30	15	20	-
5:00 a.m. - 6:00 a.m.	-	-	-	30	0	45	-	70	55	20	35	-
6:00 a.m. - 7:00 a.m.	-	-	-	30	0	40	-	95	70	30	45	-
7:00 a.m. - 8:00 a.m.	-	-	-	45	0	70	-	120	85	35	65	-
8:00 a.m. - 9:00 a.m.	-	-	-	60	0	85	-	125	85	50	80	-
9:00 a.m. - 10:00 a.m.	-	-	-	70	0	95	-	145	105	60	95	-
10:00 a.m. - 11:00 a.m.	-	-	-	85	0	115	-	150	105	50	90	-
11:00 a.m. - Noon	-	-	-	80	0	110	-	135	95	60	105	-
Noon - 1:00 p.m.	-	-	-	85	0	115	-	135	95	80	125	-
1:00 p.m. - 2:00 p.m.	-	-	-	95	0	125	-	135	95	65	105	-
2:00 p.m. - 3:00 p.m.	-	-	-	95	0	130	-	125	85	65	110	-
3:00 p.m. - 4:00 p.m.	-	-	-	80	0	110	-	150	105	80	125	-
4:00 p.m. - 5:00 p.m.	-	-	-	95	0	130	-	145	95	65	110	-
5:00 p.m. - 6:00 p.m.	-	-	-	110	0	155	-	120	80	65	110	-
6:00 p.m. - 7:00 p.m.	-	-	-	110	0	155	-	135	95	75	120	-
7:00 p.m. - 8:00 p.m.	-	-	-	85	0	125	-	135	95	65	110	-
8:00 p.m. - 9:00 p.m.	-	-	-	45	0	70	-	70	55	45	75	-
9:00 p.m. - 10:00 p.m.	-	-	-	55	0	80	-	85	65	50	90	-
10:00 p.m. - 11:00 p.m.	-	-	-	30	0	45	-	55	40	35	60	-
11:00 p.m. - Midnight	-	-	-	40	0	55	-	40	30	45	65	-

Table 5 : Base 2042 (I-75 Southbound Ramps at Bellville Road) - Adjusted for Heavy Vehicles

Approach	NORTHBOUND NA			SOUTHBOUND I-75 SB Off-Ramp			EASTBOUND Bellville Road			WESTBOUND Bellville Road		
Heavy Vehicle %	NA			55.5%			58.5%			49.0%		
Adjustment Factor	NA			1.555			1.585			1.490		
Time / Movement	L	T	R	L	T	R	L	T	R	L	T	R
Midnight - 1:00 a.m.	-	-	-	45	0	60	-	85	65	45	75	-
1:00 a.m. - 2:00 a.m.	-	-	-	40	0	45	-	65	50	35	60	-
2:00 a.m. - 3:00 a.m.	-	-	-	40	0	45	-	40	30	30	45	-
3:00 a.m. - 4:00 a.m.	-	-	-	30	0	40	-	80	55	35	60	-
4:00 a.m. - 5:00 a.m.	-	-	-	40	0	45	-	65	50	20	35	-
5:00 a.m. - 6:00 a.m.	-	-	-	55	0	80	-	120	85	35	60	-
6:00 a.m. - 7:00 a.m.	-	-	-	45	0	60	-	160	110	45	80	-
7:00 a.m. - 8:00 a.m.	-	-	-	80	0	110	-	200	135	65	105	-
8:00 a.m. - 9:00 a.m.	-	-	-	100	0	140	-	205	145	80	135	-
9:00 a.m. - 10:00 a.m.	-	-	-	110	0	150	-	240	165	95	165	-
10:00 a.m. - 11:00 a.m.	-	-	-	140	0	195	-	245	165	90	150	-
11:00 a.m. - Noon	-	-	-	125	0	180	-	220	150	105	165	-
Noon - 1:00 p.m.	-	-	-	130	0	185	-	220	150	125	215	-
1:00 p.m. - 2:00 p.m.	-	-	-	150	0	200	-	220	160	105	180	-
2:00 p.m. - 3:00 p.m.	-	-	-	155	0	210	-	215	150	110	180	-
3:00 p.m. - 4:00 p.m.	-	-	-	130	0	185	-	245	175	125	215	-
4:00 p.m. - 5:00 p.m.	-	-	-	155	0	220	-	230	160	110	180	-
5:00 p.m. - 6:00 p.m.	-	-	-	180	0	250	-	190	135	110	180	-
6:00 p.m. - 7:00 p.m.	-	-	-	180	0	250	-	220	160	120	195	-
7:00 p.m. - 8:00 p.m.	-	-	-	150	0	200	-	215	150	110	180	-
8:00 p.m. - 9:00 p.m.	-	-	-	85	0	115	-	120	85	75	125	-
9:00 p.m. - 10:00 p.m.	-	-	-	95	0	125	-	145	105	90	140	-
10:00 p.m. - 11:00 p.m.	-	-	-	55	0	80	-	95	65	60	105	-
11:00 p.m. - Midnight	-	-	-	70	0	95	-	70	50	65	120	-

The results of the signal warrant analysis for future condition indicated that the 2042 traffic volumes meet one or more of the MUTCD warrants (100% Thresholds). Detailed copies of the signal warrant analyses are included in Appendix E and Appendix F.

Table 6 : Signal Warrant Analysis Results

Scenario	Warrant 1	Warrant 2	Warrant 3	Warrant 4-9
Build 2022 (Table 1)	NOT SATISFIED	NOT SATISFIED	NOT SATISFIED	NOT EVALUATED
Build 2042 (Table 2)	NOT SATISFIED	NOT SATISFIED	NOT SATISFIED	NOT EVALUATED
Build 2022– Adjusted for Heavy Vehicles (Table 4)	NOT SATISFIED	NOT SATISFIED	NOT SATISFIED	NOT EVALUATED
Build 2042– Adjusted for Heavy Vehicles (Table 5)	SATISFIED	SATISFIED	SATISFIED	NOT EVALUATED

FUTURE DELAY ANALYSIS

A future capacity analysis was performed at the intersection of CR 274 (Bellville Road) at the I-75 Southbound Ramps. The methodology used for evaluating traffic operations at the intersection is based on the criteria set forth in the Transportation Research Board's Highway Capacity Manual (HCM 2010). Synchro Software, which

emulates the HCM methodology, was used for conducting the analysis. The future intersection capacity analysis is shown in Table 7 for the unsignalized and signalized conditions.

Table 7 : Future Intersection Delay (Signalized)

Bellville Road at the I-75 Southbound Ramps		Build (Unsignalized)				Build (Signalized)			
		AM Peak Hour		PM Peak Hour		AM Peak Hour		PM Peak Hour	
		LOS	Delay	LOS	Delay	LOS	Delay	LOS	Delay
2022	OVERALL	-	-	-	-	A	7.1	A	8.3
	Southbound Approach (I-75 Southbound Ramp)	B	10.4	B	11.7	A	9.8	B	11.1
	Westbound Left (Bellville Road)	A	8.0	A	8.0	A	6.8	A	7.3
2042	OVERALL	-	-	-	-	A	8.7	B	11.3
	Southbound Approach (I-75 Southbound Ramp)	B	12.1	C	16.8	B	15.0	B	15.8
	Westbound Left (Bellville Road)	A	8.3	A	8.2	A	8.1	B	10.4

As shown in Table 7, after the installation of a traffic signal, the intersection will operate at LOS A in the AM and LOS A or B in the PM peak hours.

ROUNDABOUT FEASIBILITY

Based on the traffic volumes on CR 274 (Bellville Road) and at the I-75 Southbound Ramps, the GDOT roundabout analysis is required since CR 274 (Bellville Road) carries less than 90% of the daily traffic through the intersection. The results of the future volumes revealed that that CR 274 (Bellville Road) approaches will carry 70% of the total daily traffic at the study intersection. The roundabout analysis was prepared using the GDOT Roundabout Analysis Tool (v3.0). Detailed results of the analysis are included in the Appendix.

Table 8 : Future Intersection Delay (Roundabout)

Bellville Road at the I-75 Southbound Ramps		Build (Roundabout)			
		AM Peak Hour		PM Peak Hour	
		LOS	Delay	LOS	Delay
2022	Southbound Approach (I-75 Southbound Ramp)	A	6	A	7
	Westbound Approach (Bellville Road)	A	5	A	5
	Eastbound Approach (Bellville Road)	A	7	A	8
2042	Southbound Approach (I-75 Southbound Ramp)	A	8	A	12
	Westbound Approach (Bellville Road)	A	6	A	6
	Eastbound Approach (Bellville Road)	B	10	A	12

Results of the roundabout analysis indicate that a single-lane roundabout would operate at an acceptable level-of-service; however, heavy vehicle usage and right-of-way constraints would need to be taken into account before further consideration is given to its implementation.

CONCLUSIONS AND RECOMMENDATIONS

The results of the signal warrant analysis indicate that the 2042 traffic volumes for the intersection of CR 274 (Bellville Road) at the I-75 Southbound Ramps will not meet MUTCD Warrants for the 100% standard. If volumes are adjusted to account for the relatively large gap times that heavy vehicles need to cross or enter the major traffic stream safely, then MUTCD Warrants 1, 2, and 3 are met for the 2042 traffic volumes. A traffic signal installation is recommended at this intersection based on the projected traffic volumes and need to service the exceptionally high proportion of heavy vehicles.

PREPARED BY: _____ DATE: _____
Jacobs Engineering Group

RECOMMENDED BY: _____ DATE: _____
District Traffic Engineer

RECOMMENDED BY: _____ DATE: _____
State Traffic Engineer

Appendices

Appendix A. Location Map

Appendix B. Future Build Concept

Appendix C. Traffic Count Data

Appendix D. Traffic Diagrams

Appendix E. Build 2022 Warrant Analysis Sheets (100% Standard)

Appendix F. Build 2042 Warrant Analysis Sheets (100% Standard)

Appendix G. Existing Intersection Analysis

Appendix H. Future Intersection Analysis (No Signal)

Appendix I. Future Intersection Analysis (With Signal)

Appendix J. Left Turn Analysis AM and PM

Appendix K. Roundabout Analysis

Appendix A. Location Map

Study Location
Danielli Dr N
Twin Lakes Rd
Shewette Rd
W Marian Ave
Lake Park
Golf Dr
S Main St
Porter Rd
Kinspy Rd
Loch Laurel Rd
Pikes Pond Rd
Mill Store Rd
Zeigler Rd
Bellville Rd
Enoch Rd
Enoch Lake Cir
Club Rd
GEORGIA
FLORIDA
NW 38th Loop
NW 4th Dr
NW 5th St
NW 26th Ave
NW Co Rd 145
NW 40th Blvd
NW 13th Dr
NW 20th Dr
NW 30th Ave
NW Co Rd 157
NW Co Rd 152
Florida Welcome
Center I-75
376
103
104
41
75

Appendix B. Future Build Concept

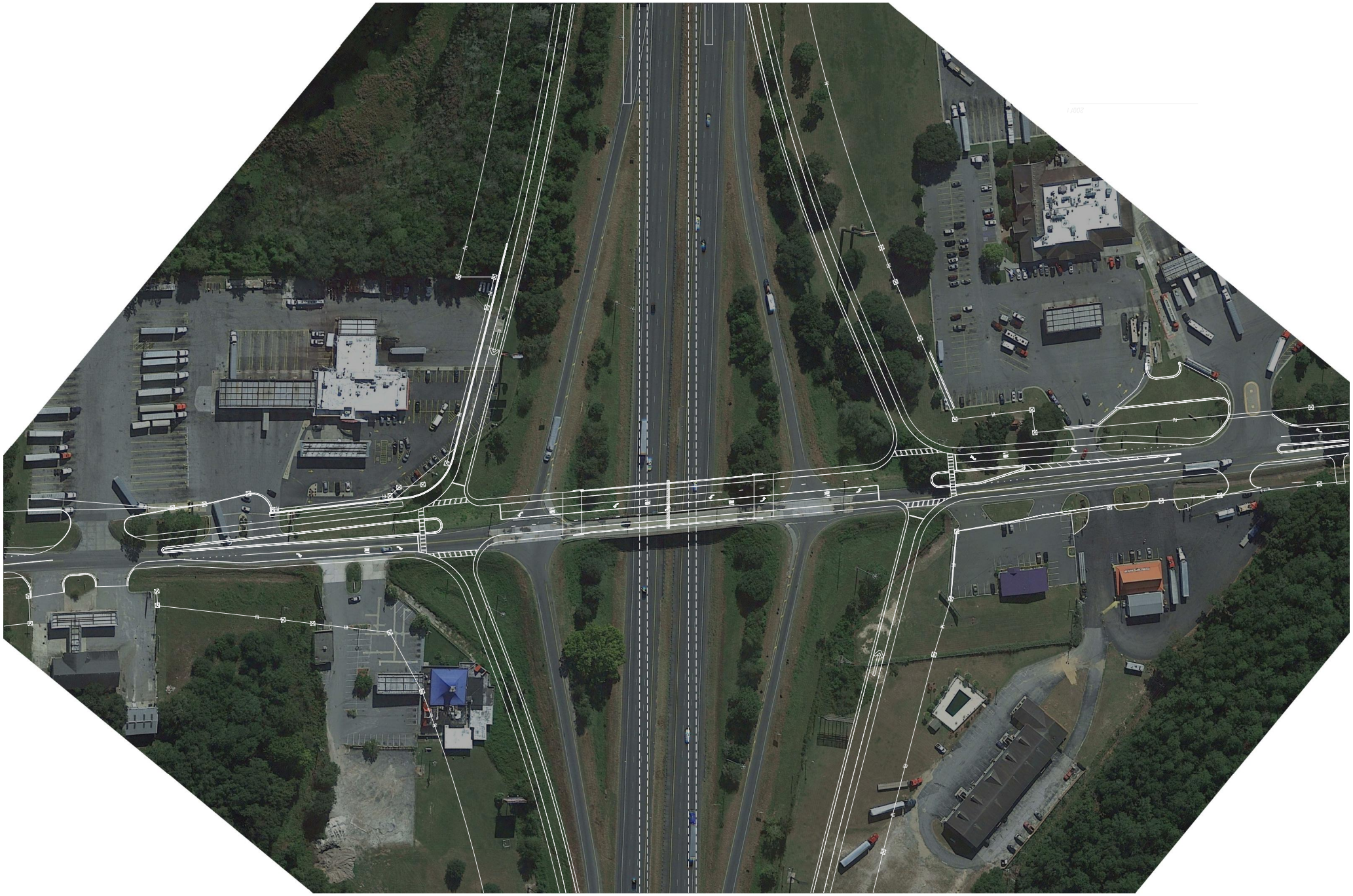

Appendix C. Traffic Count Data

BELLVILLE RD @ I-75 SB RAMPS
LOWNDES COUNTY

File Name : TM# 013987-1
Site Code : 00139871
Start Date : 9/7/2016
Page No : 1

Groups Printed- Automobiles - Trucks - Buses

	I-75 SB OFF RAMP Southbound					BELLVILLE RD Westbound					I-75 SB ON RAMP Northbound					BELLVILLE RD Eastbound					
Start Time	Peds	Left	Thru	Right	App. Total	Peds	Left	Thru	Right	App. Total	Peds	Left	Thru	Right	App. Total	Peds	Left	Thru	Right	App. Total	Int. Total
07:00	0	4	0	5	9	0	10	15	0	25	0	0	0	0	0	0	0	16	8	24	58
07:15	0	3	0	12	15	0	9	5	0	14	0	0	0	0	0	0	0	13	11	24	53
07:30	0	7	0	10	17	0	10	9	0	19	0	0	0	0	0	0	0	13	7	20	56
07:45	0	7	0	14	21	0	6	11	0	17	0	0	0	0	0	0	0	13	10	23	61
Total	0	21	0	41	62	0	35	40	0	75	0	0	0	0	0	0	0	55	36	91	228
08:00	0	7	0	12	19	0	8	14	0	22	0	0	0	0	0	0	0	17	11	28	69
08:15	0	4	0	10	14	0	4	16	0	20	0	0	0	0	0	0	0	21	14	35	69
08:30	0	6	0	12	18	0	2	14	0	16	0	0	0	0	0	0	0	27	9	36	70
08:45	0	6	0	16	22	0	9	12	0	21	0	0	0	0	0	0	0	23	14	37	80
Total	0	23	0	50	73	0	23	56	0	79	0	0	0	0	0	0	0	88	48	136	288
09:00	0	7	0	13	20	0	3	17	0	20	0	0	0	0	0	0	0	22	7	29	69
09:15	0	3	1	21	25	0	5	9	0	14	0	0	0	0	0	0	0	18	16	34	73
09:30	0	6	2	11	19	0	6	12	0	18	0	0	0	0	0	0	0	19	17	36	73
09:45	0	7	0	15	22	0	6	11	0	17	0	0	0	0	0	0	0	19	11	30	69
Total	0	23	3	60	86	0	20	49	0	69	0	0	0	0	0	0	0	78	51	129	284
15:00	0	7	0	19	26	0	14	20	0	34	0	0	0	0	0	0	0	18	14	32	92
15:15	0	13	0	15	28	0	10	13	0	23	0	0	0	0	0	0	0	14	14	28	79
15:30	0	11	0	23	34	0	5	14	0	19	0	0	0	0	0	0	0	14	11	25	78
15:45	0	9	0	21	30	0	7	22	0	29	0	0	0	0	0	0	0	19	11	30	89
Total	0	40	0	78	118	0	36	69	0	105	0	0	0	0	0	0	0	65	50	115	338
16:00	0	8	0	25	33	0	8	21	0	29	0	0	0	0	0	0	0	24	10	34	96
16:15	0	16	0	19	35	0	2	11	0	13	0	0	0	0	0	0	0	19	13	32	80
16:30	0	13	1	25	39	0	11	20	0	31	0	0	0	0	0	0	0	17	13	30	100
16:45	0	12	0	5	17	0	5	10	0	15	0	0	0	0	0	0	0	20	22	42	74
Total	0	49	1	74	124	0	26	62	0	88	0	0	0	0	0	0	0	80	58	138	350
17:00	0	11	0	19	30	0	10	16	0	26	0	0	0	0	0	0	0	19	14	33	89
17:15	0	13	1	22	36	0	5	22	0	27	0	0	0	0	0	0	0	15	17	32	95
17:30	0	11	0	19	30	0	8	19	0	27	0	0	0	0	0	0	0	20	14	34	91
17:45	0	13	0	20	33	0	7	18	0	25	0	0	0	0	0	0	0	10	11	21	79
Total	0	48	1	80	129	0	30	75	0	105	0	0	0	0	0	0	0	64	56	120	354
Grand Total	0	204	5	383	592	0	170	351	0	521	0	0	0	0	0	0	0	430	299	729	1842
Apprch %	0	34.5	0.8	64.7		0	32.6	67.4	0		0	0	0	0		0	0	59	41		
Total %	0	11.1	0.3	20.8	32.1	0	9.2	19.1	0	28.3	0	0	0	0	0	0	0	23.3	16.2	39.6	
Automobiles	0	93	4	217	314	0	75	177	0	252	0	0	0	0	0	0	0	245	138	383	949
% Automobiles	0	45.6	80	56.7	53	0	44.1	50.4	0	48.4	0	0	0	0	0	0	0	57	46.2	52.5	51.5
Trucks	0	111	0	158	269	0	95	172	0	267	0	0	0	0	0	0	0	182	153	335	871
% Trucks	0	54.4	0	41.3	45.4	0	55.9	49	0	51.2	0	0	0	0	0	0	0	42.3	51.2	46	47.3
Buses	0	0	1	8	9	0	0	2	0	2	0	0	0	0	0	0	0	3	8	11	22
% Buses	0	0	20	2.1	1.5	0	0	0.6	0	0.4	0	0	0	0	0	0	0	0.7	2.7	1.5	1.2

File Name : TM# 013987-1
Site Code : 00139871
Start Date : 9/7/2016
Page No : 2

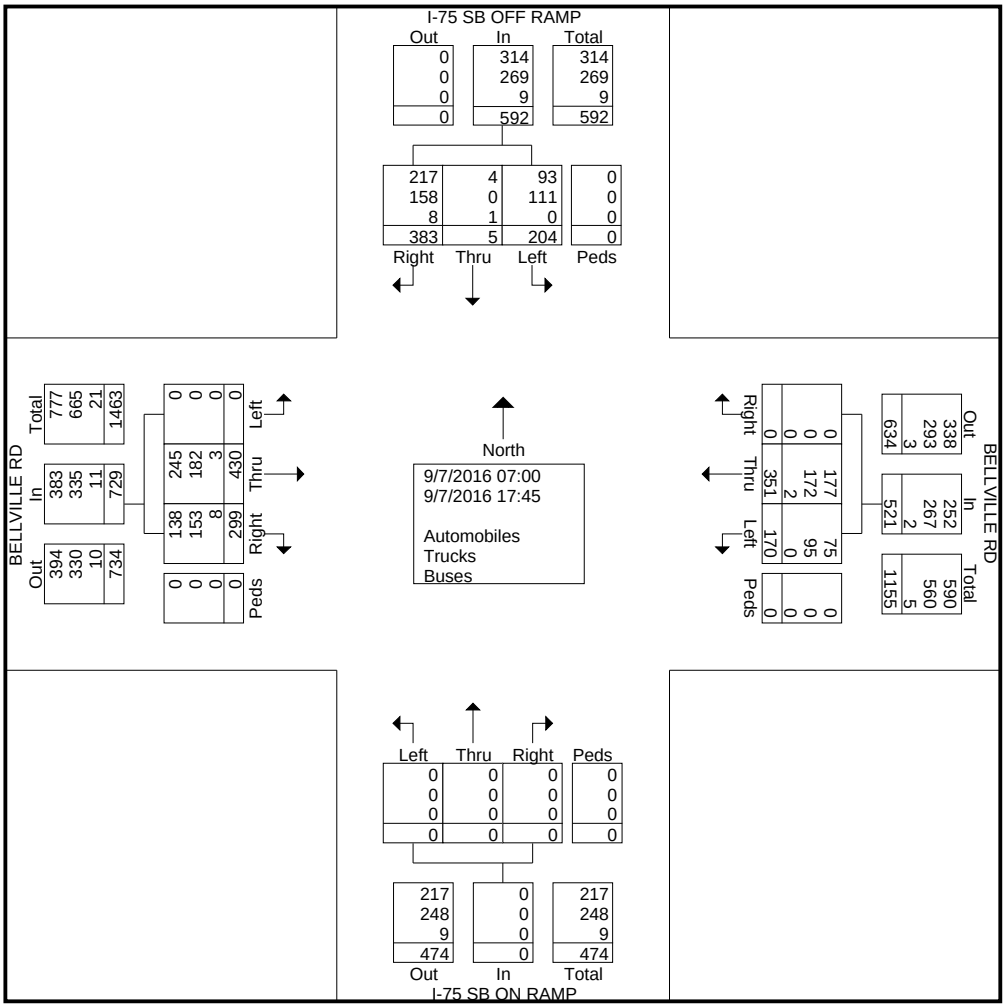

File Name : TM# 013987-1
Site Code : 00139871
Start Date : 9/7/2016
Page No : 3

	I-75 SB OFF RAMP Southbound					BELLVILLE RD Westbound					I-75 SB ON RAMP Northbound					BELLVILLE RD Eastbound					
Start Time	Peds	Left	Thru	Right	App. Total	Peds	Left	Thru	Right	App. Total	Peds	Left	Thru	Right	App. Total	Peds	Left	Thru	Right	App. Total	Int. Total
Peak Hour Analysis From 07:00 to 11:45 - Peak 1 of 1																					
Peak Hour for Entire Intersection Begins at 08:45																					
08:45	0	6	0	16	22	0	**9**	12	0	**21**	0	0	0	0	0	0	0	**23**	14	**37**	**80**
09:00	0	**7**	0	13	20	0	3	**17**	0	20	0	0	0	0	0	0	0	22	7	29	69
09:15	0	3	1	**21**	**25**	0	5	9	0	14	0	0	0	0	0	0	0	18	16	34	73
09:30	0	6	**2**	11	19	0	6	12	0	18	0	0	0	0	0	0	0	19	**17**	36	73
Total Volume	0	22	3	61	86	0	23	50	0	73	0	0	0	0	0	0	0	82	54	136	295
% App. Total	0	25.6	3.5	70.9		0	31.5	68.5	0		0	0	0	0		0	0	60.3	39.7		
PHF	.000	.786	.375	.726	.860	.000	.639	.735	.000	.869	.000	.000	.000	.000	.000	.000	.000	.891	.794	.919	.922

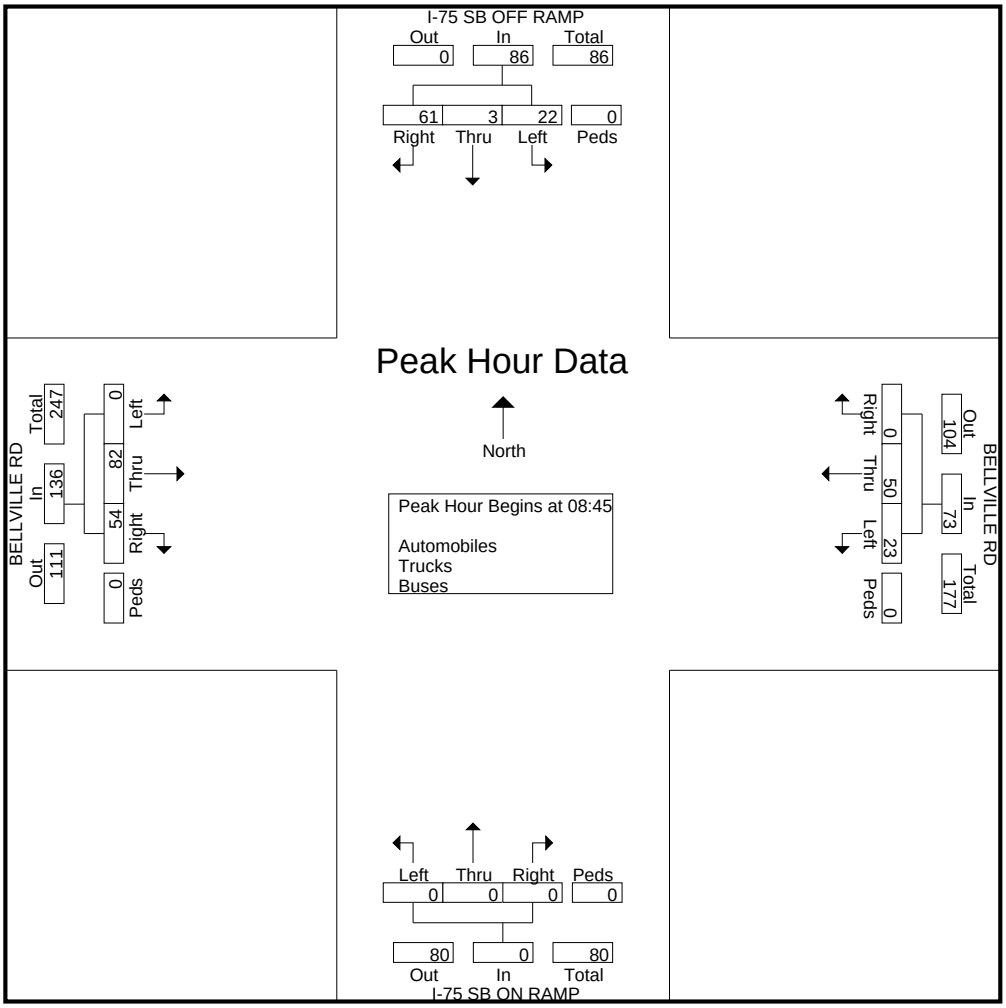

File Name : TM# 013987-1
Site Code : 00139871
Start Date : 9/7/2016
Page No : 4

	I-75 SB OFF RAMP Southbound					BELLVILLE RD Westbound					I-75 SB ON RAMP Northbound					BELLVILLE RD Eastbound					
Start Time	Peds	Left	Thru	Right	App. Total	Peds	Left	Thru	Right	App. Total	Peds	Left	Thru	Right	App. Total	Peds	Left	Thru	Right	App. Total	Int. Total
Peak Hour Analysis From 12:00 to 17:45 - Peak 1 of 1																					
Peak Hour for Entire Intersection Begins at 15:45																					
15:45	0	9	0	21	30	0	7	**22**	0	29	0	0	0	0	0	0	0	19	11	30	89
16:00	0	8	0	**25**	33	0	8	21	0	29	0	0	0	0	0	0	0	**24**	10	**34**	96
16:15	0	**16**	0	19	35	0	2	11	0	13	0	0	0	0	0	0	0	19	**13**	32	80
16:30	0	13	**1**	25	**39**	0	**11**	20	0	**31**	0	0	0	0	0	0	0	17	13	30	**100**
Total Volume	0	46	1	90	137	0	28	74	0	102	0	0	0	0	0	0	0	79	47	126	365
% App. Total	0	33.6	0.7	65.7		0	27.5	72.5	0		0	0	0	0		0	0	62.7	37.3		
PHF	.000	.719	.250	.900	.878	.000	.636	.841	.000	.823	.000	.000	.000	.000	.000	.000	.000	.823	.904	.926	.913

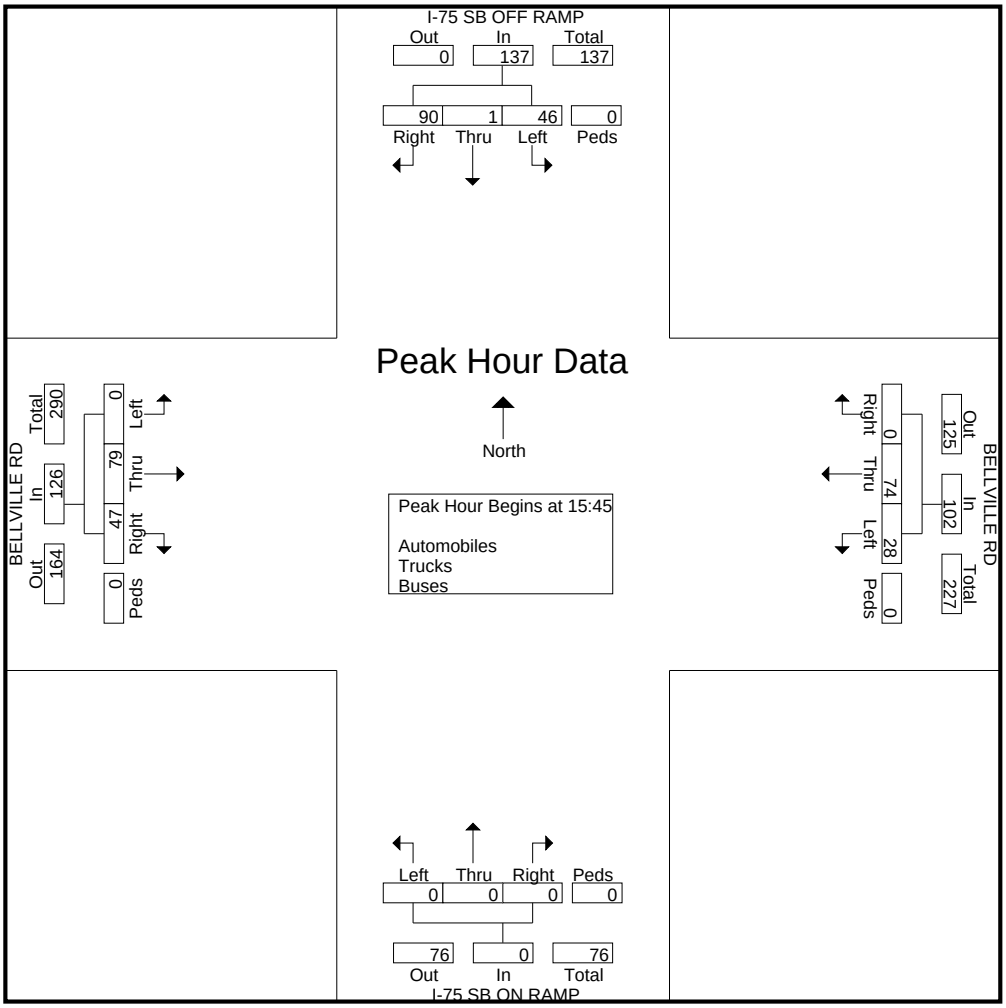

BELLVILLE RD @ I-75 NB RAMPS
LOWNDES COUNTY

File Name : TM# 013987-2
Site Code : 00139872
Start Date : 9/7/2016
Page No : 1

Groups Printed- Automobiles - Trucks - Buses

	i-75 NB ON RAMP Southbound					BELLVILLE RD Westbound					I-75 NB OFF RAMP Northbound					BELLVILLE RD Eastbound					
Start Time	Peds	Left	Thru	Right	App. Total	Peds	Left	Thru	Right	App. Total	Peds	Left	Thru	Right	App. Total	Peds	Left	Thru	Right	App. Total	Int. Total
07:00	0	0	0	0	0	0	0	17	3	20	0	7	0	6	13	0	12	8	0	20	53
07:15	0	0	0	0	0	0	0	10	8	18	0	4	0	8	12	0	9	8	0	17	47
07:30	0	0	0	0	0	0	0	9	16	25	0	14	0	9	23	0	10	10	0	20	68
07:45	0	0	0	0	0	0	0	10	7	17	0	7	0	4	11	0	9	9	0	18	46
Total	0	0	0	0	0	0	0	46	34	80	0	32	0	27	59	0	40	35	0	75	214
08:00	0	0	0	0	0	0	0	15	10	25	0	9	2	6	17	0	11	14	0	25	67
08:15	0	0	0	0	0	0	0	6	10	16	0	12	0	7	19	0	15	9	0	24	59
08:30	0	0	0	0	0	0	0	9	9	18	0	7	0	8	15	0	20	15	0	35	68
08:45	0	0	0	0	0	0	0	15	16	31	0	8	1	9	18	0	16	13	0	29	78
Total	0	0	0	0	0	0	0	45	45	90	0	36	3	30	69	0	62	51	0	113	272
09:00	0	0	0	0	0	0	0	7	8	15	0	11	0	4	15	0	15	14	0	29	59
09:15	0	0	0	0	0	0	0	10	8	18	0	4	0	11	15	0	17	5	0	22	55
09:30	0	0	0	0	0	0	0	12	9	21	0	6	0	14	20	0	14	11	0	25	66
09:45	0	0	0	0	0	0	0	10	9	19	0	7	0	9	16	0	15	6	0	21	56
Total	0	0	0	0	0	0	0	39	34	73	0	28	0	38	66	0	61	36	0	97	236
15:00	0	0	0	0	0	0	0	21	13	34	0	12	0	15	27	0	16	10	0	26	87
15:15	0	0	0	0	0	0	0	14	19	33	0	10	0	15	25	0	13	14	0	27	85
15:30	0	0	0	0	0	0	0	8	15	23	0	10	0	9	19	0	8	15	0	23	65
15:45	0	0	0	0	0	0	0	15	8	23	0	16	0	10	26	0	13	14	0	27	76
Total	0	0	0	0	0	0	0	58	55	113	0	48	0	49	97	0	50	53	0	103	313
16:00	0	0	0	0	0	0	0	17	11	28	0	10	0	13	23	0	13	19	0	32	83
16:15	0	0	0	0	0	0	0	4	8	12	0	8	0	11	19	0	10	25	0	35	66
16:30	0	0	0	0	0	0	0	19	14	33	0	12	1	15	28	0	13	18	0	31	92
16:45	0	0	0	0	0	0	0	10	13	23	0	5	0	20	25	0	15	17	0	32	80
Total	0	0	0	0	0	0	0	50	46	96	0	35	1	59	95	0	51	79	0	130	321
17:00	0	0	0	0	0	0	0	17	16	33	0	9	0	8	17	0	14	18	0	32	82
17:15	0	0	0	0	0	0	0	9	13	22	0	18	0	18	36	0	9	19	0	28	86
17:30	0	0	0	0	0	0	0	18	19	37	0	9	0	11	20	0	14	17	0	31	88
17:45	0	0	0	0	0	0	0	18	7	25	0	7	1	9	17	0	6	17	0	23	65
Total	0	0	0	0	0	0	0	62	55	117	0	43	1	46	90	0	43	71	0	114	321
Grand Total	0	0	0	0	0	0	0	300	269	569	0	222	5	249	476	0	307	325	0	632	1677
Apprch %	0	0	0	0		0	0	52.7	47.3		0	46.6	1.1	52.3		0	48.6	51.4	0		
Total %	0	0	0	0	0	0	0	17.9	16	33.9	0	13.2	0.3	14.8	28.4	0	18.3	19.4	0	37.7	
Automobiles	0	0	0	0	0	0	0	166	147	313	0	89	3	115	207	0	146	193	0	339	859
% Automobiles	0	0	0	0	0	0	0	55.3	54.6	55	0	40.1	60	46.2	43.5	0	47.6	59.4	0	53.6	51.2
Trucks	0	0	0	0	0	0	0	134	122	256	0	131	2	134	267	0	159	131	0	290	813
% Trucks	0	0	0	0	0	0	0	44.7	45.4	45	0	59	40	53.8	56.1	0	51.8	40.3	0	45.9	48.5
Buses	0	0	0	0	0	0	0	0	0	0	0	2	0	0	2	0	2	1	0	3	5
% Buses	0	0	0	0	0	0	0	0	0	0	0	0.9	0	0	0.4	0	0.7	0.3	0	0.5	0.3

File Name : TM# 013987-2
Site Code : 00139872
Start Date : 9/7/2016
Page No : 2

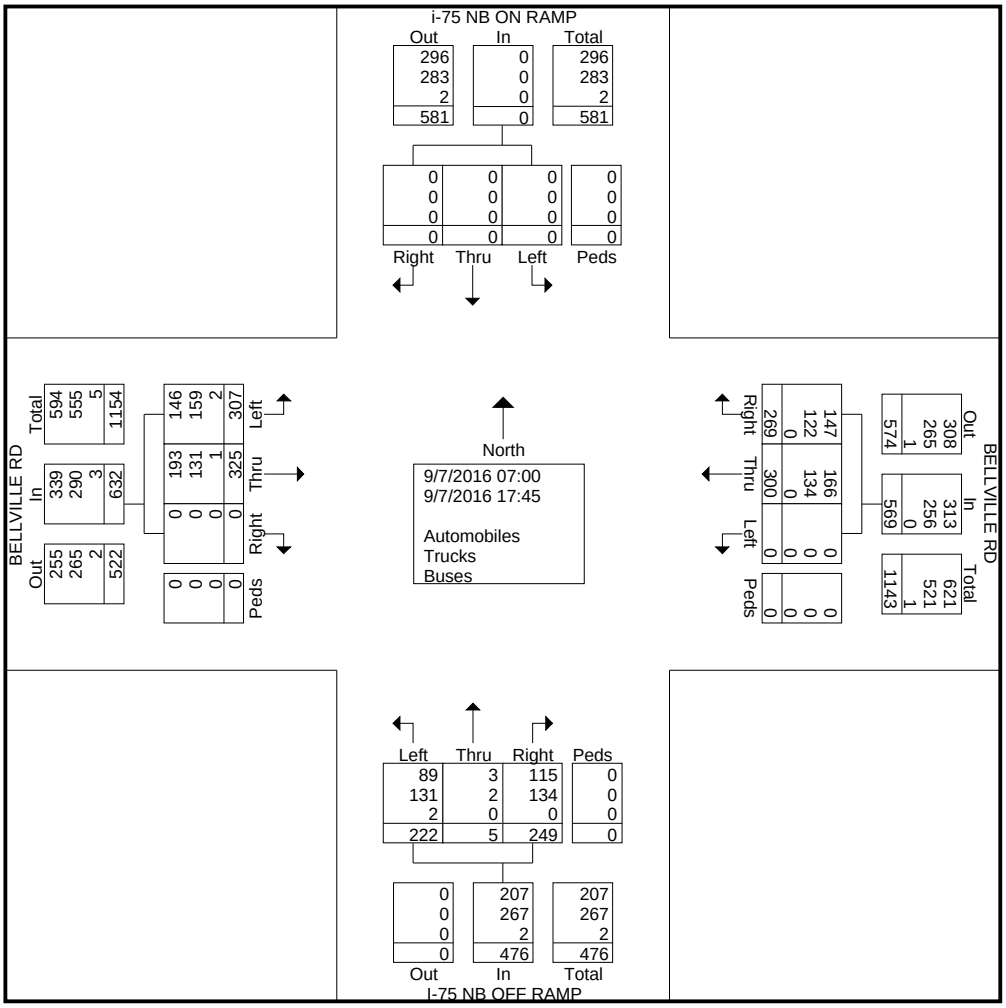

File Name : TM# 013987-2
Site Code : 00139872
Start Date : 9/7/2016
Page No : 3

	i-75 NB ON RAMP Southbound					BELLVILLE RD Westbound					I-75 NB OFF RAMP Northbound					BELLVILLE RD Eastbound					
Start Time	Peds	Left	Thru	Right	App. Total	Peds	Left	Thru	Right	App. Total	Peds	Left	Thru	Right	App. Total	Peds	Left	Thru	Right	App. Total	Int. Total
Peak Hour Analysis From 07:00 to 11:45 - Peak 1 of 1																					
Peak Hour for Entire Intersection Begins at 08:00																					
08:00	0	0	0	0	0	0	0	**15**	10	25	0	9	**2**	6	17	0	11	14	0	25	67
08:15	0	0	0	0	0	0	0	6	10	16	0	**12**	0	7	**19**	0	15	9	0	24	59
08:30	0	0	0	0	0	0	0	9	9	18	0	7	0	8	15	0	**20**	**15**	0	**35**	68
08:45	0	0	0	0	0	0	0	15	**16**	**31**	0	8	1	**9**	18	0	16	13	0	29	**78**
Total Volume	0	0	0	0	0	0	0	45	45	90	0	36	3	30	69	0	62	51	0	113	272
% App. Total	0	0	0	0		0	0	50	50		0	52.2	4.3	43.5		0	54.9	45.1	0		
PHF	.000	.000	.000	.000	.000	.000	.000	.750	.703	.726	.000	.750	.375	.833	.908	.000	.775	.850	.000	.807	.872

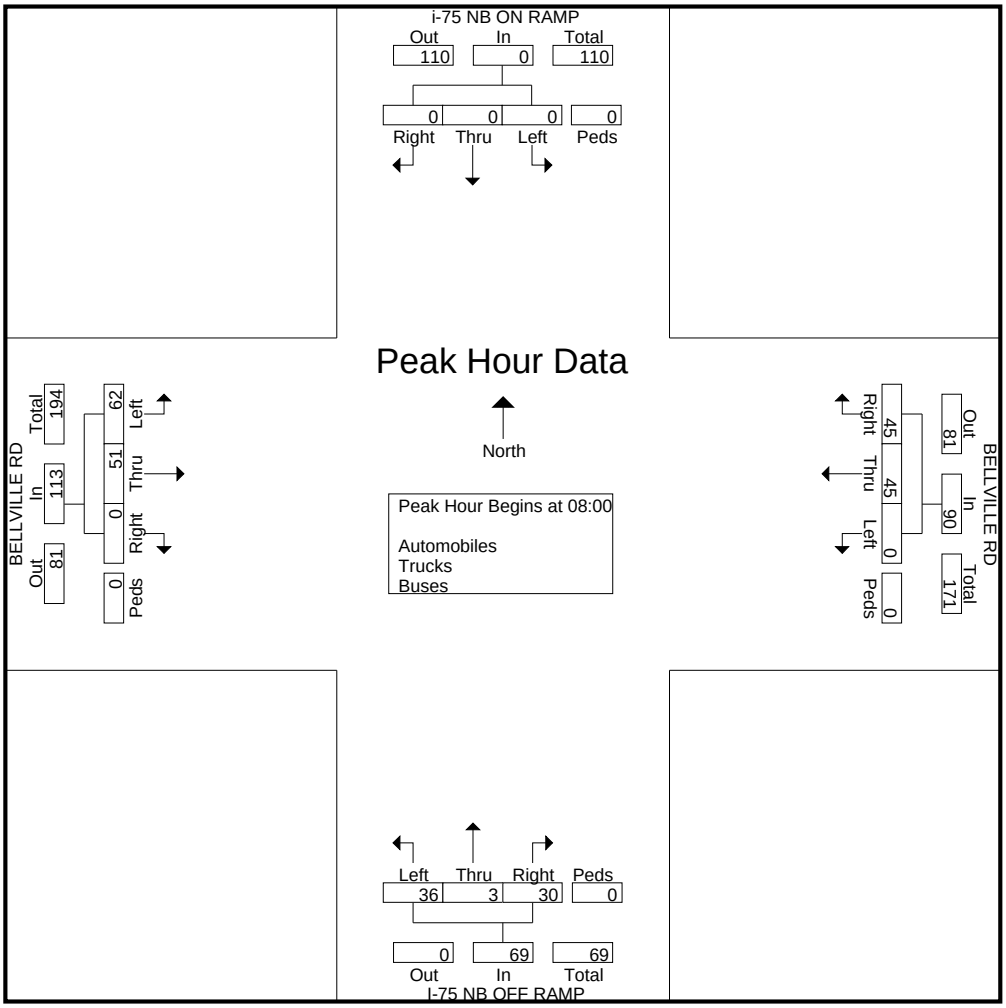

File Name : TM# 013987-2
Site Code : 00139872
Start Date : 9/7/2016
Page No : 4

	i-75 NB ON RAMP Southbound					BELLVILLE RD Westbound					I-75 NB OFF RAMP Northbound					BELLVILLE RD Eastbound					
Start Time	Peds	Left	Thru	Right	App. Total	Peds	Left	Thru	Right	App. Total	Peds	Left	Thru	Right	App. Total	Peds	Left	Thru	Right	App. Total	Int. Total
Peak Hour Analysis From 12:00 to 17:45 - Peak 1 of 1																					
Peak Hour for Entire Intersection Begins at 16:30																					
16:30	0	0	0	0	0	0	0	**19**	14	**33**	0	12	**1**	15	28	0	13	18	0	31	**92**
16:45	0	0	0	0	0	0	0	10	13	23	0	5	0	**20**	25	0	**15**	17	0	**32**	80
17:00	0	0	0	0	0	0	0	17	**16**	33	0	9	0	8	17	0	14	18	0	32	82
17:15	0	0	0	0	0	0	0	9	13	22	0	**18**	0	18	**36**	0	9	**19**	0	28	86
Total Volume	0	0	0	0	0	0	0	55	56	111	0	44	1	61	106	0	51	72	0	123	340
% App. Total	0	0	0	0		0	0	49.5	50.5		0	41.5	0.9	57.5		0	41.5	58.5	0		
PHF	.000	.000	.000	.000	.000	.000	.000	.724	.875	.841	.000	.611	.250	.763	.736	.000	.850	.947	.000	.961	.924

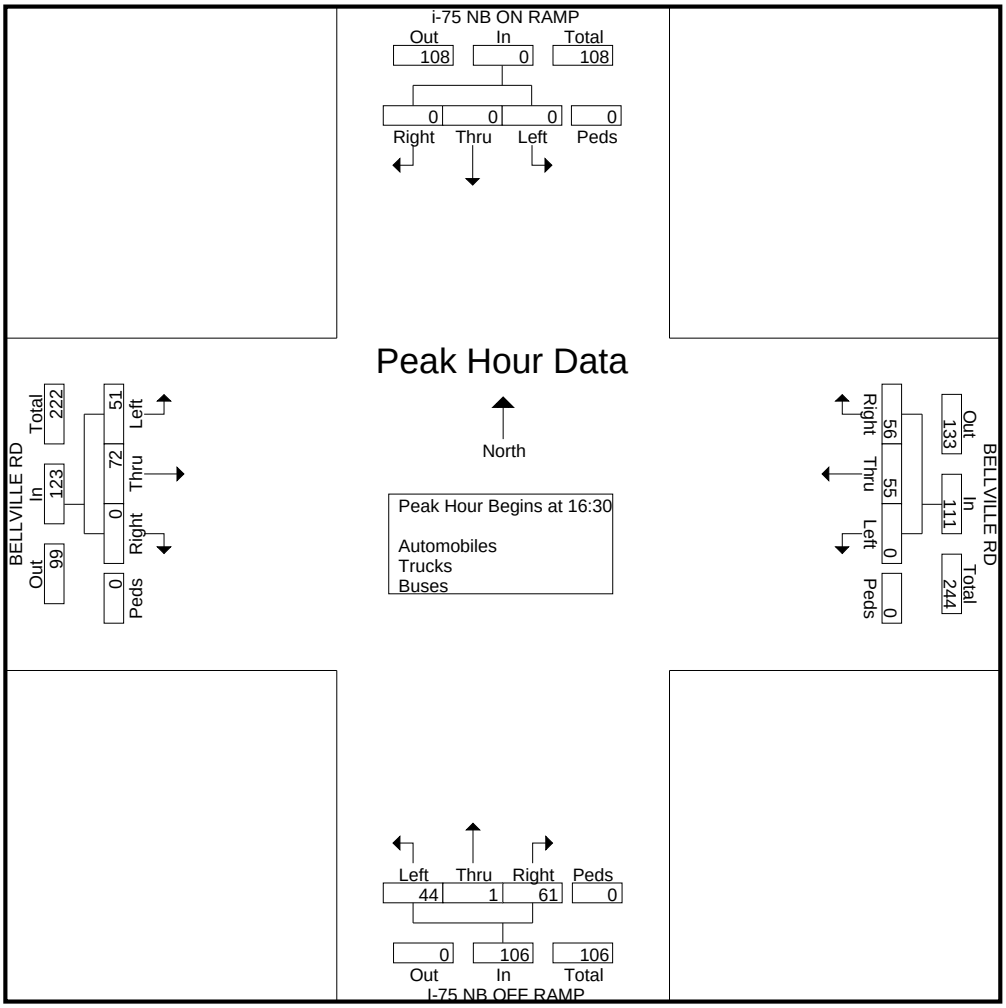

Classification Data

Reliable Traffic Data Services, LLC
Tel: (770) 578-8158 Fax: (770) 578-8159
info@reliabletraffic.org | www.reliabletraffic.org

Site Code: 39300103
I-75 SB Off Ramp
North of Bellville Rd

Start Time	25-Oct-16 Tue	Passenger	Light Truck	Heavy Truc				Total
12:00 AM		1	5	3				9
12:15		1	2	7				10
12:30		3	0	8				11
12:45		1	0	4				5
01:00		0	0	5				5
01:15		1	0	10				11
01:30		3	0	4				7
01:45		1	0	4				5
02:00		1	0	2				3
02:15		0	0	9				9
02:30		1	0	7				8
02:45		3	0	5				8
03:00		3	0	6				9
03:15		2	1	4				7
03:30		0	1	4				5
03:45		1	0	2				3
04:00		1	1	3				5
04:15		0	3	4				7
04:30		3	0	5				8
04:45		4	1	3				8
05:00		7	0	3				10
05:15		7	0	3				10
05:30		4	1	6				11
05:45		5	2	5				12
06:00		6	2	3				11
06:15		1	0	4				5
06:30		5	2	6				13
06:45		4	1	1				6
07:00		9	1	4				14
07:15		11	1	5				17
07:30		13	0	7				20
07:45		8	2	4				14
08:00		8	8	11				27
08:15		9	2	6				17
08:30		8	4	6				18
08:45		10	4	4				18
09:00		6	2	14				22
09:15		12	2	13				27
09:30		6	4	8				18
09:45		5	**3**	11				19
10:00		10	**7**	12				**29**
10:15		10	**5**	6				**21**
10:30		**18**	**8**	11				**37**
10:45		**14**	3	8				**25**
11:00		**10**	2	**7**				19
11:15		**11**	4	**13**				28
11:30		9	3	**11**				23
11:45		13	2	**16**				31
Total		269	89	307				665
Percent		40.5%	13.4%	46.2%				
Peak		10:30	09:45	11:00				10:00
Vol.		53	23	47				112
P.H.F.		0.736	0.719	0.734				0.757

Classification Data

Reliable Traffic Data Services, LLC
Tel: (770) 578-8158 Fax: (770) 578-8159
info@reliabletraffic.org | www.reliabletraffic.org

Site Code: 39300103
I-75 SB Off Ramp
North of Bellville Rd

Start Time	25-Oct-16 Tue	Passenger	Light Truck	Heavy Truc	Total
12:00 PM		12	**10**	2	24
12:15		13	**12**	2	27
12:30		19	**6**	8	33
12:45		10	**6**	8	24
01:00		14	6	7	27
01:15		14	6	9	29
01:30		19	6	5	30
01:45		19	4	10	33
02:00		12	4	8	24
02:15		14	4	14	32
02:30		11	5	14	30
02:45		20	6	10	36
03:00		13	4	8	25
03:15		12	5	11	28
03:30		12	4	11	27
03:45		10	3	12	25
04:00		11	4	13	28
04:15		14	5	12	31
04:30		20	5	10	35
04:45		16	4	12	32
05:00		14	4	14	32
05:15		**20**	5	**14**	**39**
05:30		**17**	4	**12**	**33**
05:45		**20**	5	**17**	**42**
06:00		**19**	5	**22**	**46**
06:15		19	5	8	32
06:30		15	7	13	35
06:45		15	5	13	33
07:00		11	4	11	26
07:15		14	5	19	38
07:30		12	3	13	28
07:45		9	4	10	23
08:00		7	2	6	15
08:15		9	3	7	19
08:30		5	2	7	14
08:45		8	2	8	18
09:00		12	4	6	22
09:15		4	2	8	14
09:30		5	3	10	18
09:45		7	2	8	17
10:00		7	1	4	12
10:15		8	3	5	16
10:30		3	1	2	6
10:45		3	2	5	10
11:00		7	4	5	16
11:15		2	1	7	10
11:30		9	2	6	17
11:45		3	2	4	9
Total		569	201	450	1220
Percent		46.6%	16.5%	36.9%	
Peak		17:15	12:00	17:15	17:15
Vol.		76	34	65	160
P.H.F.		0.950	0.708	0.739	0.870
Grand Total		838	290	757	1885
Percent		44.5%	15.4%	40.2%	

ADT ADT 1,885 AADT 1,885

Classification Data

Reliable Traffic Data Services, LLC
Tel: (770) 578-8158 Fax: (770) 578-8159
info@reliabletraffic.org | www.reliabletraffic.org

Site Code: 39300101
Bellville Rd EB
West of I-75 SB Ramps

Start Time	25-Oct-16 Tue	Passenger	Light Truck	Heavy Truc				Total
12:00 AM		4	2	4				10
12:15		5	2	10				17
12:30		4	5	3				12
12:45		4	3	5				12
01:00		1	0	10				11
01:15		0	0	7				7
01:30		7	2	7				16
01:45		1	1	1				3
02:00		0	2	3				5
02:15		1	1	2				4
02:30		1	1	11				13
02:45		1	0	2				3
03:00		3	4	12				19
03:15		1	0	5				6
03:30		2	2	7				11
03:45		2	3	7				12
04:00		4	1	5				10
04:15		2	1	6				9
04:30		1	6	4				11
04:45		1	3	5				9
05:00		6	1	6				13
05:15		14	3	7				24
05:30		9	1	6				16
05:45		5	5	10				20
06:00		9	1	9				19
06:15		10	4	19				33
06:30		7	2	14				23
06:45		8	1	11				20
07:00		14	2	12				28
07:15		15	3	13				31
07:30		14	2	14				30
07:45		15	5	7				27
08:00		8	3	14				25
08:15		12	7	16				35
08:30		7	2	17				26
08:45		**14**	8	14				36
09:00		**17**	4	9				30
09:15		**14**	2	16				32
09:30		**26**	6	17				49
09:45		11	4	17				32
10:00		15	7	14				36
10:15		15	**7**	9				**31**
10:30		18	**7**	**16**				**41**
10:45		12	**9**	**16**				**37**
11:00		19	**11**	**20**				**50**
11:15		12	4	**14**				30
11:30		11	3	6				20
11:45		14	4	12				30
Total		396	157	471				1024
Percent		38.7%	15.3%	46.0%				
Peak		08:45	10:15	10:30				10:15
Vol.		71	34	66				159
P.H.F.		0.683	0.773	0.825				0.795

Classification Data

Reliable Traffic Data Services, LLC
Tel: (770) 578-8158 Fax: (770) 578-8159
info@reliabletraffic.org | www.reliabletraffic.org

Site Code: 39300101
Bellville Rd EB
West of I-75 SB Ramps

Start Time	25-Oct-16 Tue	Passenger	Light Truck	Heavy Truc	Total
12:00 PM		13	3	13	29
12:15		11	**5**	10	26
12:30		18	**6**	13	37
12:45		**19**	**10**	11	40
01:00		**19**	**6**	9	34
01:15		**18**	4	8	30
01:30		**20**	7	9	36
01:45		10	5	19	34
02:00		12	6	14	32
02:15		9	2	13	24
02:30		20	4	9	33
02:45		16	7	15	**38**
03:00		19	5	12	**36**
03:15		16	6	18	**40**
03:30		17	6	14	**37**
03:45		15	5	14	34
04:00		13	4	11	28
04:15		15	5	14	34
04:30		23	8	10	41
04:45		20	5	11	36
05:00		15	4	14	33
05:15		17	4	14	35
05:30		7	2	11	20
05:45		9	3	15	27
06:00		10	4	11	25
06:15		16	6	14	36
06:30		11	4	15	30
06:45		18	6	18	42
07:00		14	4	**13**	31
07:15		9	6	**18**	33
07:30		11	5	**15**	31
07:45		10	5	**19**	34
08:00		9	2	12	23
08:15		8	2	7	17
08:30		3	2	8	13
08:45		6	2	12	20
09:00		7	3	15	25
09:15		9	3	11	23
09:30		9	2	12	23
09:45		7	2	7	16
10:00		7	3	11	21
10:15		4	2	4	10
10:30		4	2	9	15
10:45		1	1	7	9
11:00		4	1	2	7
11:15		5	2	6	13
11:30		5	3	6	14
11:45		3	1	4	8
Total		561	195	557	1313
Percent		42.7%	14.9%	42.4%	
Peak		12:45	12:15	19:00	14:45
Vol.		76	27	65	151
P.H.F.		0.950	0.675	0.855	0.944
Grand Total		957	352	1028	2337
Percent		40.9%	15.1%	44.0%	

ADT ADT 2,337 AADT 2,337

Classification Data

Reliable Traffic Data Services, LLC
Tel: (770) 578-8158 Fax: (770) 578-8159
info@reliabletraffic.org | www.reliabletraffic.org

Site Code: 39300101
Bellville Rd WB
West of I-75 SB Ramps

Start Time	25-Oct-16 Tue	Passenger	Light Truck	Heavy Truc	Total
12:00 AM		6	6	5	17
12:15		2	3	8	13
12:30		4	2	8	14
12:45		2	0	4	6
01:00		0	0	10	10
01:15		3	0	8	11
01:30		3	0	6	9
01:45		1	1	5	7
02:00		2	0	3	5
02:15		1	0	9	10
02:30		1	0	8	9
02:45		2	1	3	6
03:00		4	0	5	9
03:15		1	2	6	9
03:30		1	2	3	6
03:45		3	0	2	5
04:00		5	1	2	8
04:15		0	3	3	6
04:30		2	0	5	7
04:45		4	1	4	9
05:00		6	1	6	13
05:15		9	0	2	11
05:30		4	2	5	11
05:45		5	1	3	9
06:00		7	2	6	15
06:15		2	1	4	7
06:30		8	1	7	16
06:45		8	2	2	12
07:00		6	2	7	15
07:15		10	2	6	18
07:30		15	3	9	27
07:45		10	5	6	21
08:00		9	6	13	28
08:15		13	2	9	24
08:30		9	4	9	22
08:45		15	4	12	31
09:00		13	6	10	29
09:15		20	4	**17**	41
09:30		11	5	**10**	26
09:45		14	**6**	**11**	**31**
10:00		**13**	**11**	**17**	**41**
10:15		**12**	**6**	7	**25**
10:30		**23**	**13**	15	**51**
10:45		**18**	1	8	27
11:00		12	1	10	23
11:15		13	4	15	32
11:30		11	5	12	28
11:45		12	3	12	27
Total		355	125	357	837
Percent		42.4%	14.9%	42.7%	
Peak		10:00	09:45	09:15	09:45
Vol.		66	36	55	148
P.H.F.		0.717	0.692	0.809	0.725

Classification Data

Reliable Traffic Data Services, LLC
Tel: (770) 578-8158 Fax: (770) 578-8159
info@reliabletraffic.org | www.reliabletraffic.org

Site Code: 39300101
Bellville Rd WB
West of I-75 SB Ramps

Start Time	25-Oct-16 Tue	Passenger	Light Truck	Heavy Truc	Total
12:00 PM		9	2	10	21
12:15		20	**7**	8	35
12:30		20	**7**	11	38
12:45		14	**6**	11	31
01:00		18	**7**	5	30
01:15		20	6	12	38
01:30		10	7	16	33
01:45		18	4	12	34
02:00		12	4	11	27
02:15		16	6	16	38
02:30		**19**	6	14	39
02:45		**19**	7	14	40
03:00		**16**	6	17	39
03:15		**20**	6	14	40
03:30		14	6	15	35
03:45		12	3	10	25
04:00		18	6	14	38
04:15		17	8	14	39
04:30		22	6	14	42
04:45		15	5	14	34
05:00		15	5	21	**41**
05:15		17	4	9	**30**
05:30		20	6	**23**	**49**
05:45		18	5	**21**	**44**
06:00		14	5	**19**	38
06:15		14	5	**14**	33
06:30		17	8	19	44
06:45		23	8	16	47
07:00		15	6	14	35
07:15		13	5	20	38
07:30		9	3	23	35
07:45		12	4	17	33
08:00		8	2	12	22
08:15		9	4	16	29
08:30		10	5	16	31
08:45		11	3	14	28
09:00		11	4	10	25
09:15		8	3	13	24
09:30		5	3	17	25
09:45		9	2	12	23
10:00		5	2	7	14
10:15		7	3	10	20
10:30		6	3	5	14
10:45		3	1	5	9
11:00		8	4	10	22
11:15		3	2	7	12
11:30		6	2	8	16
11:45		3	1	5	9
Total		628	223	635	1486
Percent		42.3%	15.0%	42.7%	
Peak		14:30	12:15	17:30	17:00
Vol.		74	27	77	164
P.H.F.		0.925	0.964	0.837	0.837
Grand Total		983	348	992	2323
Percent		42.3%	15.0%	42.7%	

ADT ADT 2,323 AADT 2,323

MetroCount Traffic Executive
Event Counts

LOWNDES COUNTY P.I.# 013987 SITE# 9004 BELLVIEW RD E/O I-75 SB RAMPS (EASTBOUND)

DATASETS:

Site:	**[4081] MCSetup factory setup**
ChannelA:	0 - Unused or unknown. - Added to totals. (1)
ChannelB:	0 - Unused or unknown. - Excluded from totals. (0)
Survey Duration:	13:32 Mon 03 Oct 2016 to 14:48 Mon 10 Oct 2016
File:	G:\DATA\2016\Georgia\P.I\P.I.# 013987\408110OCT2016.EC0 (Base)
Identifier:	P3990VGY MC56-L4 [MC55] (c)Microcom 19Sep03
Algorithm:	Event count

PROFILE:

Filter time:	**00:00 Wed 05 Oct 2016 to 00:00 Fri 07 Oct 2016**
Name:	Factory default profile
Method:	Count axles divided by two.
Units:	Non-Metric (ft, mi, f/s, mph, lb, ton)
In profile:	5197 Events

*** Wed 05 Oct 2016 - Total=2391, 15 minute drops,**

0000	0100	0200	0300	0400	0500	0600	0700	0800	0900	1000	1100	1200	1300	1400	1500	1600	1700	1800	1900	2000	2100	2200	2300	
49	**41**	**28**	**44**	**49**	**50**	**80**	**86**	**102**	**118**	**135**	**135**	**165**	**140**	**153**	**162**	**143**	**134**	**145**	**116**	**82**	**97**	**71**	**66**	
16	10	6	14	9	7	10	20	20	28	27	47	**51**	45	39	**42**	42	39	23	32	23	23	12	22	10
11	9	8	10	14	20	29	20	27	30	34	29	**52**	31	50	**48**	29	36	53	31	15	24	16	20	14
13	10	8	9	13	16	13	23	22	32	43	**30**	29	27	29	**41**	24	30	32	28	23	20	15	12	18
9	12	6	11	13	7	28	23	33	28	31	**29**	33	37	**35**	31	48	29	37	25	21	30	28	12	17

*** Thu 06 Oct 2016 - Total=2806, 15 minute drops,**

0000	0100	0200	0300	0400	0500	0600	0700	0800	0900	1000	1100	1200	1300	1400	1500	1600	1700	1800	1900	2000	2100	2200	2300	
59	**42**	**37**	**46**	**45**	**58**	**83**	**99**	**138**	**105**	**140**	**183**	**186**	**176**	**160**	**178**	**177**	**198**	**175**	**161**	**117**	**102**	**85**	**56**	
10	8	7	10	10	9	19	23	35	31	29	**56**	48	48	45	50	38	54	41	40	23	28	19	17	-
14	15	14	12	9	12	17	23	34	26	33	**44**	43	36	24	50	56	51	43	39	31	25	37	20	-
18	8	6	12	15	15	26	28	35	25	44	**36**	41	46	43	34	40	44	57	44	31	25	17	10	-
17	11	10	12	11	22	21	25	34	23	34	**47**	54	46	48	44	43	49	34	38	32	24	12	9	-

MetroCount Traffic Executive
Event Counts

LOWNDES COUNTY P.I.# 013987 SITE# 9004 BELLVIEW RD E/O I-75 SB RAMPS (WESTBOUND)

DATASETS:

Site:	**[4131] 4131**
ChannelA:	1 - North bound, A hit first. - Added to totals. (1)
ChannelB:	0 - Unused or unknown. - Excluded from totals. (0)
Survey Duration:	13:31 Mon 03 Oct 2016 to 15:50 Mon 10 Oct 2016
File:	G:\DATA\2016\Georgia\P.I\P.I.# 013987\413110OCT2016.EC0 (Base)
Identifier:	P254WM29 MC56-L5 [MC55] (c)Microcom 19Oct04
Algorithm:	Event count

PROFILE:

Filter time:	**00:00 Wed 05 Oct 2016 to 00:00 Fri 07 Oct 2016**
Name:	Factory default profile
Method:	Count axles divided by two.
Units:	Non-Metric (ft, mi, f/s, mph, lb, ton)
In profile:	4029 Events

*** Wed 05 Oct 2016 - Total=1867, 15 minute drops,**

0000	0100	0200	0300	0400	0500	0600	0700	0800	0900	1000	1100	1200	1300	1400	1500	1600	1700	1800	1900	2000	2100	2200	2300	
39	**40**	**21**	**31**	**26**	**38**	**45**	**52**	**86**	**108**	**93**	**109**	**128**	**99**	**114**	**129**	**90**	**122**	**112**	**103**	**58**	**99**	**63**	**62**	
9	7	5	7	5	9	6	11	17	23	23	23	**18**	**26**	32	35	25	29	35	25	15	24	15	15	9
6	10	7	8	5	11	12	9	30	27	28	24	**34**	33	22	27	19	36	32	34	14	27	16	16	14
20	9	3	8	6	11	11	16	22	26	14	36	**42**	20	31	30	18	26	22	28	12	27	17	16	18
4	14	6	8	10	7	16	16	17	32	28	**26**	**34**	20	29	37	28	31	23	16	17	21	15	15	11

*** Thu 06 Oct 2016 - Total=2161, 15 minute drops,**

0000	0100	0200	0300	0400	0500	0600	0700	0800	0900	1000	1100	1200	1300	1400	1500	1600	1700	1800	1900	2000	2100	2200	2300	
52	**36**	**37**	**49**	**25**	**43**	**56**	**86**	**87**	**104**	**99**	**106**	**148**	**130**	**116**	**147**	**145**	**115**	**145**	**129**	**106**	**88**	**69**	**43**	
9	10	7	12	7	7	18	24	23	33	24	21	**40**	34	34	34	33	29	30	24	23	18	20	17	-
14	7	9	10	4	9	10	21	24	15	20	24	**29**	23	21	48	32	22	39	31	28	20	22	15	-
18	9	13	15	10	16	13	17	17	35	29	33	**44**	30	30	30	33	35	44	48	29	31	12	5	-
11	10	8	12	4	11	15	24	23	21	26	**28**	35	43	31	35	47	29	32	26	26	19	15	6	-

Appendix D. Traffic Diagrams

SUBMITTED SEPARATELY

Appendix E. Build 2022 Warrant Analysis Sheets (100% Standard)

JACOBS ENGINEERING

SIGNAL WARRANT ANALYSIS SUMMARY REPORT:
Bellville Rd @ I-75 SB Ramp
2022 Build

Project Number :	CB506050	Report Date :	November 28, 2016
Analyst :	GKW	Counts Date :	Fall 2016
Major Street :	Bellville Rd		
Minor Street :	I-75 SB Ramp		
Speed on Major Street :	45		
Lanes @ Intersection :	Major Street - 1		
	Minor Street - 1		

WARRANT 1, EIGHT-HOUR VEHICULAR VOLUME **100% Thresholds**

WARRANT 1	**NOT SATISFIED**				
	STANDARD 1	**NOT SATISFIED**	CONDITION A	0	HOURS
			CONDITION B	0	HOURS
	STANDARD 2	**NOT SATISFIED**	CONDITION A	0	HOURS
			CONDITION B	0	HOURS

WARRANT 2, FOUR-HOUR VEHICULAR VOLUME **100% Thresholds**

WARRANT 2	**NOT SATISFIED**	0	HOURS

WARRANT 3, PEAK HOUR VEHICULAR VOLUME **100% Thresholds**

WARRANT 3	**NOT SATISFIED**		
	STANDARD A	**NOT EVALUATED**	0	VEHICLE HOURS
	STANDARD B	**NOT SATISFIED**	0	HOURS

WARRANT 4, PEDESTRIAN VOLUME **100% Thresholds**

WARRANT 4	**NOT EVALUATED**		
	STANDARD A	**NOT SATISFIED**	0	HOURS
	STANDARD B	**NOT SATISFIED**	0	HOURS

WARRANT 5, SCHOOL CROSSING

WARRANT 5 **NOT EVALUATED**

WARRANT 6, COORDINATED SIGNAL SYSTEM

WARRANT 6 **NOT EVALUATED**

WARRANT 7, CRASH EXPERIENCE

WARRANT 7 **NOT EVALUATED**

WARRANT 8, ROADWAY NETWORK

WARRANT 8 **NOT EVALUATED**

WARRANT 9, INTERSECTION NEAR A GRADE CROSSING

WARRANT 9 **NOT EVALUATED**

JACOBS ENGINEERING

SIGNAL WARRANT ANALYSIS SUMMARY REPORT:
Bellville Rd @ I-75 SB Ramp
2022 Build

Analyst : GKW
Major Street : Bellville Rd
Minor Street : I-75 SB Ramp
Speed on Major Street : 45

Report Date : November 28, 2016
Counts Date : Fall 2016
Lanes @ Intersection : Major Street - 1
Minor Street - 1

24-HOUR TRAFFIC VOLUME

TABLE 1

Time	Minor Street				Minor Street			
	Northbound				Southbound			
24 Hours	Total Approach Volume	Right Turn	% Right Turn	With 0 % RT Turn Reduction	Total Approach Volume	Right Turn	% Right Turn	With 0% RT Turn Reduction
12:00 AM	0	0	0	0	45	20	44	45
1:00 AM	0	0	0	0	35	20	57	35
2:00 AM	0	0	0	0	35	20	57	35
3:00 AM	0	0	0	0	25	15	60	25
4:00 AM	0	0	0	0	35	25	71	35
5:00 AM	0	0	0	0	50	30	60	50
6:00 AM	0	0	0	0	45	30	67	45
7:00 AM	0	0	0	0	75	50	67	75
8:00 AM	0	0	0	0	95	55	58	95
9:00 AM	0	0	0	0	105	65	62	105
10:00 AM	0	0	0	0	130	70	54	130
11:00 AM	0	0	0	0	120	75	63	120
12:00 PM	0	0	0	0	130	75	58	130
1:00 PM	0	0	0	0	140	80	57	140
2:00 PM	0	0	0	0	145	80	55	145
3:00 PM	0	0	0	0	120	75	63	120
4:00 PM	0	0	0	0	145	90	62	145
5:00 PM	0	0	0	0	170	105	62	170
6:00 PM	0	0	0	0	170	90	53	170
7:00 PM	0	0	0	0	135	65	48	135
8:00 PM	0	0	0	0	75	45	60	75
9:00 PM	0	0	0	0	85	40	47	85
10:00 PM	0	0	0	0	50	30	60	50
11:00 PM	0	0	0	0	60	20	33	60
Total				0				2220

JACOBS ENGINEERING

24-HOUR TRAFFIC VOLUME

TABLE 2

Time	Major Street				Major Street			
	Eastbound				Westbound			
24 Hours	Total Approach Volume	Right Turn	% Right Turn	With 0% RT Turn Reduction	Total Approach Volume	Right Turn	% Right Turn	With 0% RT Turn Reduction
12:00 AM	60	25	42	60	50	0	0	50
1:00 AM	40	15	38	40	40	0	0	40
2:00 AM	25	10	40	25	30	0	0	30
3:00 AM	50	20	40	50	40	0	0	40
4:00 AM	45	20	44	45	25	0	0	25
5:00 AM	80	35	44	80	40	0	0	40
6:00 AM	105	45	43	105	50	0	0	50
7:00 AM	130	55	42	130	70	0	0	70
8:00 AM	135	55	41	135	90	0	0	90
9:00 AM	155	65	42	155	105	0	0	105
10:00 AM	160	65	41	160	95	0	0	95
11:00 AM	145	60	41	145	110	0	0	110
12:00 PM	145	60	41	145	140	0	0	140
1:00 PM	145	60	41	145	115	0	0	115
2:00 PM	135	55	41	135	120	0	0	120
3:00 PM	160	65	41	160	140	0	0	140
4:00 PM	150	60	40	150	120	0	0	120
5:00 PM	125	50	40	125	120	0	0	120
6:00 PM	145	60	41	145	130	0	0	130
7:00 PM	145	60	41	145	120	0	0	120
8:00 PM	80	35	44	80	80	0	0	80
9:00 PM	95	40	42	95	95	0	0	95
10:00 PM	60	25	42	60	65	0	0	65
11:00 PM	45	20	44	45	75	0	0	75
Total				2560				2065

JACOBS ENGINEERING

WARRANT ANALYSIS RESULTS - Bellville Rd @ I-75 SB Ramp

WARRANT 1 - EIGHT-HOUR VEHICULAR VOLUME (100% Thresholds)

WARRANT 1* NOT SATISFIED

STANDARD 1	NOT SATISFIED	CONDITION A	0	HOURS
		CONDITION B	0	HOURS
STANDARD 2	NOT SATISFIED	CONDITION A	0	HOURS
		CONDITION B	0	HOURS

24-HOUR TRAFFIC VOLUME EVALUATION

TABLE 3

HOUR OF DAY	MAJOR ST TOTAL OF BOTH APPROACHES	MINOR ST HIGH VOLUME APPROACH	WARRANT 1			
			STANDARD 1		STANDARD 2	
			CONDITION A	CONDITION B	CONDITION A	CONDITION B
12:00 AM	110	45	0	0	0	0
1:00 AM	80	35	0	0	0	0
2:00 AM	55	35	0	0	0	0
3:00 AM	90	25	0	0	0	0
4:00 AM	70	35	0	0	0	0
5:00 AM	120	50	0	0	0	0
6:00 AM	155	45	0	0	0	0
7:00 AM	200	75	0	MINOR	0	MINOR
8:00 AM	225	95	0	MINOR	0	MINOR
9:00 AM	260	105	0	MINOR	0	MINOR
10:00 AM	255	130	0	MINOR	MINOR	MINOR
11:00 AM	255	120	0	MINOR	MINOR	MINOR
12:00 PM	285	130	0	MINOR	MINOR	MINOR
1:00 PM	260	140	0	MINOR	MINOR	MINOR
2:00 PM	255	145	0	MINOR	MINOR	MINOR
3:00 PM	300	120	0	MINOR	MINOR	MINOR
4:00 PM	270	145	0	MINOR	MINOR	MINOR
5:00 PM	245	170	MINOR	MINOR	MINOR	MINOR
6:00 PM	275	170	MINOR	MINOR	MINOR	MINOR
7:00 PM	265	135	0	MINOR	MINOR	MINOR
8:00 PM	160	75	0	MINOR	0	MINOR
9:00 PM	190	85	0	MINOR	0	MINOR
10:00 PM	125	50	0	0	0	0
11:00 PM	120	60	0	0	0	MINOR
TOTAL	4625	2220				

CRITERIA**		STANDARD 1 - 100%		STANDARD 2 - 80%	
		CONDITION A	CONDITION B	CONDITION A	CONDITION B
	MAJOR ST	500	750	400	600
	MINOR ST	150	75	120	60
NO. OF HOURS MET		0	0	0	0

JACOBS ENGINEERING

WARRANT 2, FOUR-HOUR VEHICULAR VOLUME **(100% Thresholds)**

WARRANT 2* NOT SATISFIED 0 HOURS

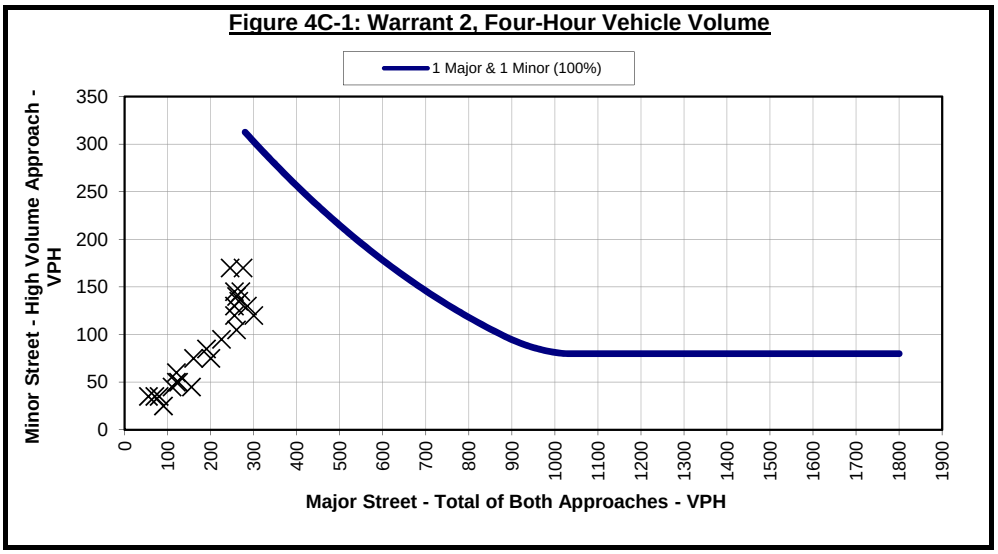

*Note: Curves for minimum volumes are based on the curves from FIGURES 4C-1 & 4C-2, MUTCD Section 4C.04

WARRANT 3, PEAK HOUR **(100% Thresholds)**

STANDARD A NOT EVALUATED 0 VEHICLE HOURS

0	Peak Hour Minor-Street Volume
0	Average Minor-Street Delay (seconds)
1	Number of Approach Lanes (Minor Street)

STANDARD B* NOT SATISFIED 0 HOURS

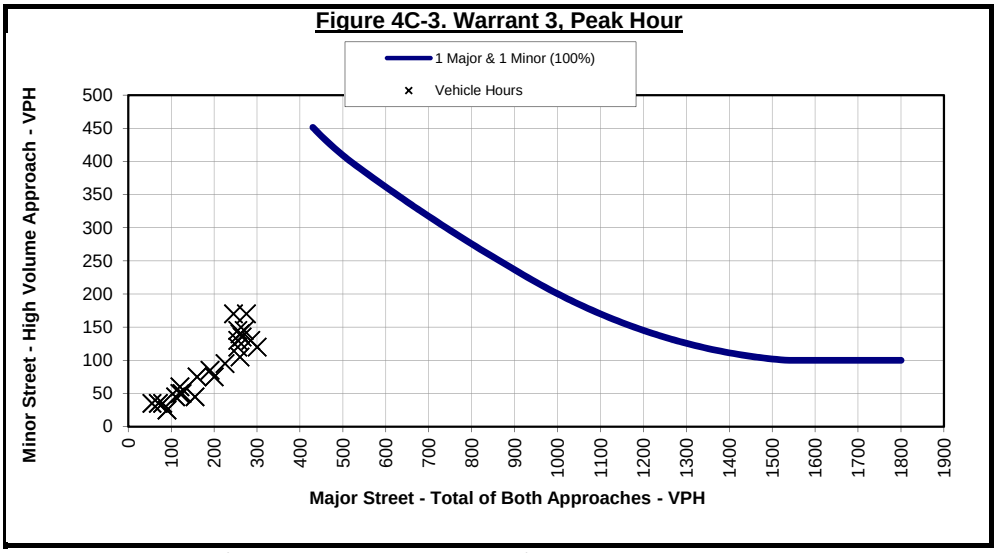

*Note: Curves for minimum volumes are based on the curves from FIGURES 4C-3 & 4C-4, MUTCD Section 4C.04

JACOBS ENGINEERING

WARRANT 4, PEDESTRIAN VOLUME **(100% Thresholds)**

WARRANT 4	NOT EVALUATED			
	STANDARD A	NOT SATISFIED	0	HOURS
	STANDARD B	NOT SATISFIED	0	HOURS

WARRANT 5, SCHOOL CROSSING

WARRANT 5 NOT EVALUATED

WARRANT 6, COORDINATED SIGNAL SYSTEM

WARRANT 6 NOT EVALUATED

WARRANT 7, CRASH EXPERIENCE

WARRANT 7 NOT EVALUATED

WARRANT 8, ROADWAY NETWORK

WARRANT 8 NOT EVALUATED

WARRANT 9, INTERSECTION NEAR A GRADE CROSSING

WARRANT 9 NOT EVALUATED

JACOBS ENGINEERING

SIGNAL WARRANT ANALYSIS SUMMARY REPORT:
Bellville Rd @ I-75 SB Ramp
2022 Build (Adjusted for Heavy Vehicles)

Project Number :	CB506050	Report Date :	November 28, 2016
Analyst :	GKW	Counts Date :	Fall 2016
Major Street :	Bellville Rd		
Minor Street :	I-75 SB Ramp		
Speed on Major Street :	45		
Lanes @ Intersection :	Major Street - 1		
	Minor Street - 1		

WARRANT 1, EIGHT-HOUR VEHICULAR VOLUME **100% Thresholds**

WARRANT 1	**NOT SATISFIED**				
	STANDARD 1	**NOT SATISFIED**	CONDITION A	0	HOURS
			CONDITION B	0	HOURS
	STANDARD 2	**NOT SATISFIED**	CONDITION A	7	HOURS
			CONDITION B	0	HOURS

WARRANT 2, FOUR-HOUR VEHICULAR VOLUME **100% Thresholds**

WARRANT 2	**NOT SATISFIED**	1	HOURS

WARRANT 3, PEAK HOUR VEHICULAR VOLUME **100% Thresholds**

WARRANT 3	**NOT SATISFIED**		
	STANDARD A	**NOT EVALUATED**	0	VEHICLE HOURS
	STANDARD B	**NOT SATISFIED**	0	HOURS

WARRANT 4, PEDESTRIAN VOLUME **100% Thresholds**

WARRANT 4	**NOT EVALUATED**		
	STANDARD A	**NOT SATISFIED**	0	HOURS
	STANDARD B	**NOT SATISFIED**	0	HOURS

WARRANT 5, SCHOOL CROSSING

WARRANT 5 **NOT EVALUATED**

WARRANT 6, COORDINATED SIGNAL SYSTEM

WARRANT 6 **NOT EVALUATED**

WARRANT 7, CRASH EXPERIENCE

WARRANT 7 **NOT EVALUATED**

WARRANT 8, ROADWAY NETWORK

WARRANT 8 **NOT EVALUATED**

WARRANT 9, INTERSECTION NEAR A GRADE CROSSING

WARRANT 9 **NOT EVALUATED**

JACOBS ENGINEERING

SIGNAL WARRANT ANALYSIS SUMMARY REPORT:
Bellville Rd @ I-75 SB Ramp
2022 Build (Adjusted for Heavy Vehicles)

Analyst : GKW
Major Street : Bellville Rd
Minor Street : I-75 SB Ramp
Speed on Major Street : 45

Report Date : November 28, 2016
Counts Date : Fall 2016
Lanes @ Intersection : Major Street - 1
Minor Street - 1

24-HOUR TRAFFIC VOLUME

TABLE 1

Time	Minor Street Northbound				Minor Street Southbound			
24 Hours	Total Approach Volume	Right Turn	% Right Turn	With 0 % RT Turn Reduction	Total Approach Volume	Right Turn	% Right Turn	With 0% RT Turn Reduction
12:00 AM	0	0	0	0	70	30	43	70
1:00 AM	0	0	0	0	55	30	55	55
2:00 AM	0	0	0	0	55	30	55	55
3:00 AM	0	0	0	0	40	25	63	40
4:00 AM	0	0	0	0	55	40	73	55
5:00 AM	0	0	0	0	75	45	60	75
6:00 AM	0	0	0	0	70	45	64	70
7:00 AM	0	0	0	0	115	80	70	115
8:00 AM	0	0	0	0	145	85	59	145
9:00 AM	0	0	0	0	165	100	61	165
10:00 AM	0	0	0	0	200	110	55	200
11:00 AM	0	0	0	0	190	115	61	190
12:00 PM	0	0	0	0	200	115	58	200
1:00 PM	0	0	0	0	220	125	57	220
2:00 PM	0	0	0	0	225	125	56	225
3:00 PM	0	0	0	0	190	115	61	190
4:00 PM	0	0	0	0	225	140	62	225
5:00 PM	0	0	0	0	265	165	62	265
6:00 PM	0	0	0	0	265	140	53	265
7:00 PM	0	0	0	0	210	100	48	210
8:00 PM	0	0	0	0	115	70	61	115
9:00 PM	0	0	0	0	135	60	44	135
10:00 PM	0	0	0	0	75	45	60	75
11:00 PM	0	0	0	0	95	30	32	95
Total				0				3455

JACOBS ENGINEERING

24-HOUR TRAFFIC VOLUME

TABLE 2

Time	Major Street				Major Street			
	Eastbound				Westbound			
24 Hours	Total Approach Volume	Right Turn	% Right Turn	With 0% RT Turn Reduction	Total Approach Volume	Right Turn	% Right Turn	With 0% RT Turn Reduction
12:00 AM	95	40	42	95	75	0	0	75
1:00 AM	65	25	38	65	55	0	0	55
2:00 AM	40	15	38	40	45	0	0	45
3:00 AM	80	30	38	80	55	0	0	55
4:00 AM	70	30	43	70	35	0	0	35
5:00 AM	125	55	44	125	55	0	0	55
6:00 AM	165	70	42	165	75	0	0	75
7:00 AM	205	85	41	205	100	0	0	100
8:00 AM	210	85	40	210	130	0	0	130
9:00 AM	250	105	42	250	155	0	0	155
10:00 AM	255	105	41	255	140	0	0	140
11:00 AM	230	95	41	230	165	0	0	165
12:00 PM	230	95	41	230	205	0	0	205
1:00 PM	230	95	41	230	170	0	0	170
2:00 PM	210	85	40	210	175	0	0	175
3:00 PM	255	105	41	255	205	0	0	205
4:00 PM	240	95	40	240	175	0	0	175
5:00 PM	200	80	40	200	175	0	0	175
6:00 PM	230	95	41	230	195	0	0	195
7:00 PM	230	95	41	230	175	0	0	175
8:00 PM	125	55	44	125	120	0	0	120
9:00 PM	150	65	43	150	140	0	0	140
10:00 PM	95	40	42	95	95	0	0	95
11:00 PM	70	30	43	70	110	0	0	110

Total				4055				3025

JACOBS ENGINEERING

WARRANT ANALYSIS RESULTS - Bellville Rd @ I-75 SB Ramp

WARRANT 1 - EIGHT-HOUR VEHICULAR VOLUME (100% Thresholds)

WARRANT 1* NOT SATISFIED

STANDARD 1	NOT SATISFIED	CONDITION A	0	HOURS
		CONDITION B	0	HOURS
STANDARD 2	NOT SATISFIED	CONDITION A	7	HOURS
		CONDITION B	0	HOURS

24-HOUR TRAFFIC VOLUME EVALUATION

TABLE 3

HOUR OF DAY	MAJOR ST TOTAL OF BOTH APPROACHES	MINOR ST HIGH VOLUME APPROACH	WARRANT 1			
			STANDARD 1		STANDARD 2	
			CONDITION A	CONDITION B	CONDITION A	CONDITION B
12:00 AM	170	70	0	0	0	MINOR
1:00 AM	120	55	0	0	0	0
2:00 AM	85	55	0	0	0	0
3:00 AM	135	40	0	0	0	0
4:00 AM	105	55	0	0	0	0
5:00 AM	180	75	0	MINOR	0	MINOR
6:00 AM	240	70	0	0	0	MINOR
7:00 AM	305	115	0	MINOR	0	MINOR
8:00 AM	340	145	0	MINOR	MINOR	MINOR
9:00 AM	405	165	MINOR	MINOR	BOTH	MINOR
10:00 AM	395	200	MINOR	MINOR	MINOR	MINOR
11:00 AM	395	190	MINOR	MINOR	MINOR	MINOR
12:00 PM	435	200	MINOR	MINOR	BOTH	MINOR
1:00 PM	400	220	MINOR	MINOR	BOTH	MINOR
2:00 PM	385	225	MINOR	MINOR	MINOR	MINOR
3:00 PM	460	190	MINOR	MINOR	BOTH	MINOR
4:00 PM	415	225	MINOR	MINOR	BOTH	MINOR
5:00 PM	375	265	MINOR	MINOR	MINOR	MINOR
6:00 PM	425	265	MINOR	MINOR	BOTH	MINOR
7:00 PM	405	210	MINOR	MINOR	BOTH	MINOR
8:00 PM	245	115	0	MINOR	0	MINOR
9:00 PM	290	135	0	MINOR	MINOR	MINOR
10:00 PM	190	75	0	MINOR	0	MINOR
11:00 PM	180	95	0	MINOR	0	MINOR
TOTAL	7080	3455				

CRITERIA**		STANDARD 1 - 100%		STANDARD 2 - 80%	
		CONDITION A	CONDITION B	CONDITION A	CONDITION B
	MAJOR ST	500	750	400	600
	MINOR ST	150	75	120	60
NO. OF HOURS MET		0	0	7	0

JACOBS ENGINEERING

WARRANT 2, FOUR-HOUR VEHICULAR VOLUME **(100% Thresholds)**

WARRANT 2* NOT SATISFIED 1 HOURS

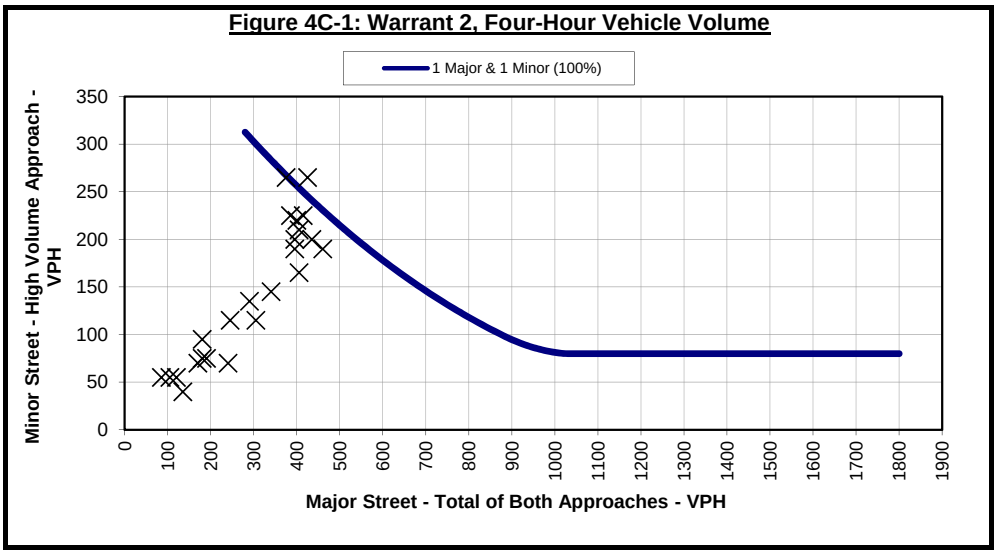

*Note: Curves for minimum volumes are based on the curves from FIGURES 4C-1 & 4C-2, MUTCD Section 4C.04

WARRANT 3, PEAK HOUR **(100% Thresholds)**

STANDARD A NOT EVALUATED 0 VEHICLE HOURS

0	Peak Hour Minor-Street Volume
0	Average Minor-Street Delay (seconds)
1	Number of Approach Lanes (Minor Street)

STANDARD B* NOT SATISFIED 0 HOURS

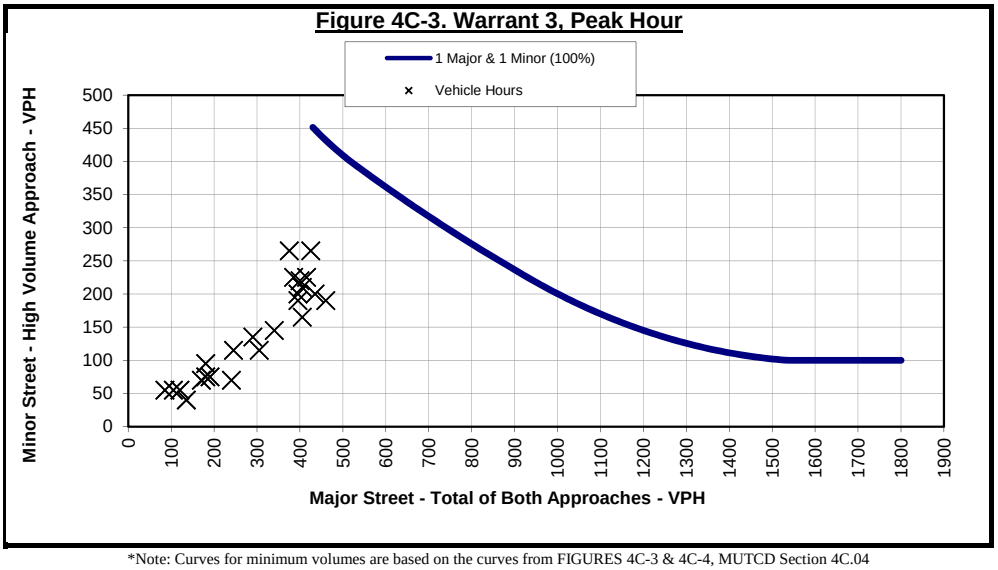

*Note: Curves for minimum volumes are based on the curves from FIGURES 4C-3 & 4C-4, MUTCD Section 4C.04

JACOBS ENGINEERING

WARRANT 4, PEDESTRIAN VOLUME **(100% Thresholds)**

WARRANT 4	NOT EVALUATED			
	STANDARD A	NOT SATISFIED	0	HOURS
	STANDARD B	NOT SATISFIED	0	HOURS

WARRANT 5, SCHOOL CROSSING

WARRANT 5 NOT EVALUATED

WARRANT 6, COORDINATED SIGNAL SYSTEM

WARRANT 6 NOT EVALUATED

WARRANT 7, CRASH EXPERIENCE

WARRANT 7 NOT EVALUATED

WARRANT 8, ROADWAY NETWORK

WARRANT 8 NOT EVALUATED

WARRANT 9, INTERSECTION NEAR A GRADE CROSSING

WARRANT 9 NOT EVALUATED

Appendix F. Build 2042 Warrant Analysis Sheets (100% Standard)

JACOBS ENGINEERING

SIGNAL WARRANT ANALYSIS SUMMARY REPORT:
Bellville Rd @ I-75 SB Ramp
2022 Build (Adjusted for Heavy Vehicles)

Project Number :	CB506050	Report Date :	November 28, 2016
Analyst :	GKW	Counts Date :	Fall 2016
Major Street :	Bellville Rd		
Minor Street :	I-75 SB Ramp		
Speed on Major Street :	45		
Lanes @ Intersection :	Major Street - 1		
	Minor Street - 1		

WARRANT 1, EIGHT-HOUR VEHICULAR VOLUME **100% Thresholds**

WARRANT 1	**NOT SATISFIED**				
	STANDARD 1	**NOT SATISFIED**	CONDITION A	0	HOURS
			CONDITION B	0	HOURS
	STANDARD 2	**NOT SATISFIED**	CONDITION A	7	HOURS
			CONDITION B	0	HOURS

WARRANT 2, FOUR-HOUR VEHICULAR VOLUME **100% Thresholds**

WARRANT 2	**NOT SATISFIED**	1	HOURS

WARRANT 3, PEAK HOUR VEHICULAR VOLUME **100% Thresholds**

WARRANT 3	**NOT SATISFIED**		
	STANDARD A	**NOT EVALUATED**	0	VEHICLE HOURS
	STANDARD B	**NOT SATISFIED**	0	HOURS

WARRANT 4, PEDESTRIAN VOLUME **100% Thresholds**

WARRANT 4	**NOT EVALUATED**		
	STANDARD A	**NOT SATISFIED**	0	HOURS
	STANDARD B	**NOT SATISFIED**	0	HOURS

WARRANT 5, SCHOOL CROSSING

WARRANT 5 **NOT EVALUATED**

WARRANT 6, COORDINATED SIGNAL SYSTEM

WARRANT 6 **NOT EVALUATED**

WARRANT 7, CRASH EXPERIENCE

WARRANT 7 **NOT EVALUATED**

WARRANT 8, ROADWAY NETWORK

WARRANT 8 **NOT EVALUATED**

WARRANT 9, INTERSECTION NEAR A GRADE CROSSING

WARRANT 9 **NOT EVALUATED**

JACOBS ENGINEERING

SIGNAL WARRANT ANALYSIS SUMMARY REPORT:
Bellville Rd @ I-75 SB Ramp
2022 Build (Adjusted for Heavy Vehicles)

Analyst : GKW
Major Street : Bellville Rd
Minor Street : I-75 SB Ramp
Speed on Major Street : 45

Report Date : November 28, 2016
Counts Date : Fall 2016
Lanes @ Intersection : Major Street - 1
Minor Street - 1

24-HOUR TRAFFIC VOLUME

TABLE 1

Time	Minor Street Northbound				Minor Street Southbound			
24 Hours	Total Approach Volume	Right Turn	% Right Turn	With 0 % RT Turn Reduction	Total Approach Volume	Right Turn	% Right Turn	With 0% RT Turn Reduction
12:00 AM	0	0	0	0	70	30	43	70
1:00 AM	0	0	0	0	55	30	55	55
2:00 AM	0	0	0	0	55	30	55	55
3:00 AM	0	0	0	0	40	25	63	40
4:00 AM	0	0	0	0	55	40	73	55
5:00 AM	0	0	0	0	75	45	60	75
6:00 AM	0	0	0	0	70	45	64	70
7:00 AM	0	0	0	0	115	80	70	115
8:00 AM	0	0	0	0	145	85	59	145
9:00 AM	0	0	0	0	165	100	61	165
10:00 AM	0	0	0	0	200	110	55	200
11:00 AM	0	0	0	0	190	115	61	190
12:00 PM	0	0	0	0	200	115	58	200
1:00 PM	0	0	0	0	220	125	57	220
2:00 PM	0	0	0	0	225	125	56	225
3:00 PM	0	0	0	0	190	115	61	190
4:00 PM	0	0	0	0	225	140	62	225
5:00 PM	0	0	0	0	265	165	62	265
6:00 PM	0	0	0	0	265	140	53	265
7:00 PM	0	0	0	0	210	100	48	210
8:00 PM	0	0	0	0	115	70	61	115
9:00 PM	0	0	0	0	135	60	44	135
10:00 PM	0	0	0	0	75	45	60	75
11:00 PM	0	0	0	0	95	30	32	95
Total				0				3455

JACOBS ENGINEERING

24-HOUR TRAFFIC VOLUME

TABLE 2

Time	Major Street				Major Street			
	Eastbound				Westbound			
24 Hours	Total Approach Volume	Right Turn	% Right Turn	With 0% RT Turn Reduction	Total Approach Volume	Right Turn	% Right Turn	With 0% RT Turn Reduction
12:00 AM	95	40	42	95	75	0	0	75
1:00 AM	65	25	38	65	55	0	0	55
2:00 AM	40	15	38	40	45	0	0	45
3:00 AM	80	30	38	80	55	0	0	55
4:00 AM	70	30	43	70	35	0	0	35
5:00 AM	125	55	44	125	55	0	0	55
6:00 AM	165	70	42	165	75	0	0	75
7:00 AM	205	85	41	205	100	0	0	100
8:00 AM	210	85	40	210	130	0	0	130
9:00 AM	250	105	42	250	155	0	0	155
10:00 AM	255	105	41	255	140	0	0	140
11:00 AM	230	95	41	230	165	0	0	165
12:00 PM	230	95	41	230	205	0	0	205
1:00 PM	230	95	41	230	170	0	0	170
2:00 PM	210	85	40	210	175	0	0	175
3:00 PM	255	105	41	255	205	0	0	205
4:00 PM	240	95	40	240	175	0	0	175
5:00 PM	200	80	40	200	175	0	0	175
6:00 PM	230	95	41	230	195	0	0	195
7:00 PM	230	95	41	230	175	0	0	175
8:00 PM	125	55	44	125	120	0	0	120
9:00 PM	150	65	43	150	140	0	0	140
10:00 PM	95	40	42	95	95	0	0	95
11:00 PM	70	30	43	70	110	0	0	110

Total				4055				3025

JACOBS ENGINEERING

WARRANT ANALYSIS RESULTS - Bellville Rd @ I-75 SB Ramp

WARRANT 1 - EIGHT-HOUR VEHICULAR VOLUME (100% Thresholds)

WARRANT 1* NOT SATISFIED

STANDARD 1	NOT SATISFIED	CONDITION A	0	HOURS
		CONDITION B	0	HOURS
STANDARD 2	NOT SATISFIED	CONDITION A	7	HOURS
		CONDITION B	0	HOURS

24-HOUR TRAFFIC VOLUME EVALUATION

TABLE 3

HOUR OF DAY	MAJOR ST TOTAL OF BOTH APPROACHES	MINOR ST HIGH VOLUME APPROACH	WARRANT 1			
			STANDARD 1		STANDARD 2	
			CONDITION A	CONDITION B	CONDITION A	CONDITION B
12:00 AM	170	70	0	0	0	MINOR
1:00 AM	120	55	0	0	0	0
2:00 AM	85	55	0	0	0	0
3:00 AM	135	40	0	0	0	0
4:00 AM	105	55	0	0	0	0
5:00 AM	180	75	0	MINOR	0	MINOR
6:00 AM	240	70	0	0	0	MINOR
7:00 AM	305	115	0	MINOR	0	MINOR
8:00 AM	340	145	0	MINOR	MINOR	MINOR
9:00 AM	405	165	MINOR	MINOR	BOTH	MINOR
10:00 AM	395	200	MINOR	MINOR	MINOR	MINOR
11:00 AM	395	190	MINOR	MINOR	MINOR	MINOR
12:00 PM	435	200	MINOR	MINOR	BOTH	MINOR
1:00 PM	400	220	MINOR	MINOR	BOTH	MINOR
2:00 PM	385	225	MINOR	MINOR	MINOR	MINOR
3:00 PM	460	190	MINOR	MINOR	BOTH	MINOR
4:00 PM	415	225	MINOR	MINOR	BOTH	MINOR
5:00 PM	375	265	MINOR	MINOR	MINOR	MINOR
6:00 PM	425	265	MINOR	MINOR	BOTH	MINOR
7:00 PM	405	210	MINOR	MINOR	BOTH	MINOR
8:00 PM	245	115	0	MINOR	0	MINOR
9:00 PM	290	135	0	MINOR	MINOR	MINOR
10:00 PM	190	75	0	MINOR	0	MINOR
11:00 PM	180	95	0	MINOR	0	MINOR
TOTAL	7080	3455				

CRITERIA**		STANDARD 1 - 100%		STANDARD 2 - 80%	
		CONDITION A	CONDITION B	CONDITION A	CONDITION B
	MAJOR ST	500	750	400	600
	MINOR ST	150	75	120	60
NO. OF HOURS MET		0	0	7	0

JACOBS ENGINEERING

WARRANT 2, FOUR-HOUR VEHICULAR VOLUME **(100% Thresholds)**

WARRANT 2* NOT SATISFIED 1 HOURS

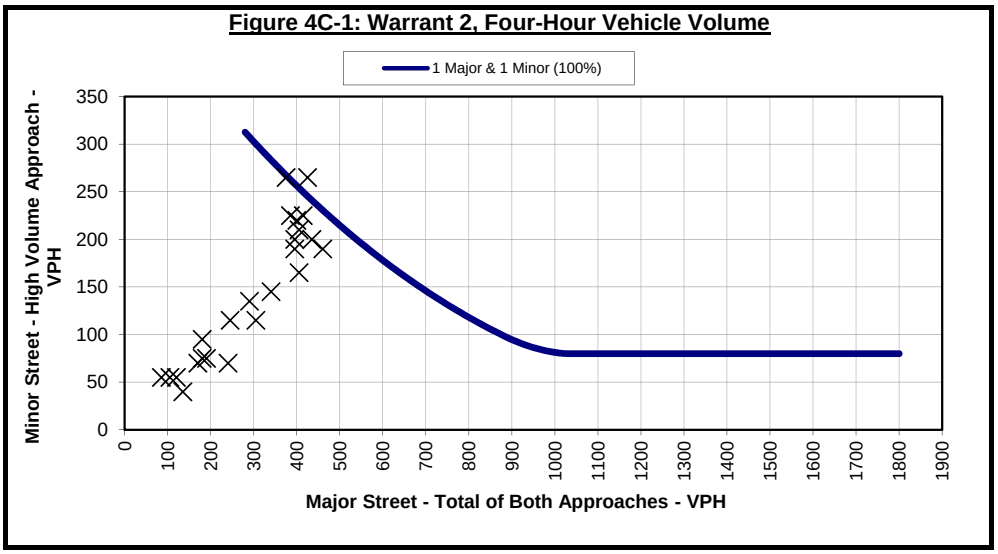

*Note: Curves for minimum volumes are based on the curves from FIGURES 4C-1 & 4C-2, MUTCD Section 4C.04

WARRANT 3, PEAK HOUR **(100% Thresholds)**

STANDARD A NOT EVALUATED 0 VEHICLE HOURS

0	Peak Hour Minor-Street Volume
0	Average Minor-Street Delay (seconds)
1	Number of Approach Lanes (Minor Street)

STANDARD B* NOT SATISFIED 0 HOURS

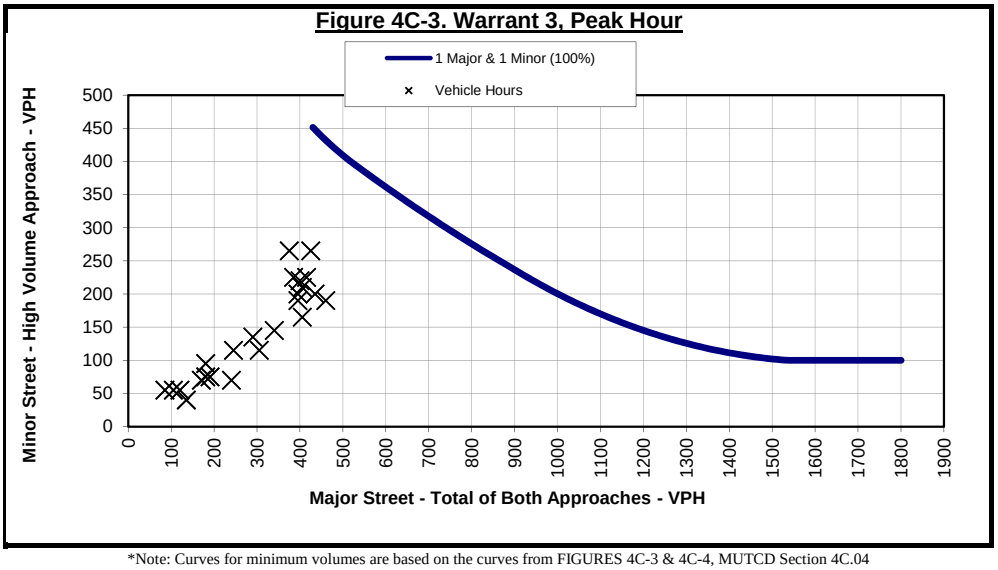

*Note: Curves for minimum volumes are based on the curves from FIGURES 4C-3 & 4C-4, MUTCD Section 4C.04

JACOBS ENGINEERING

WARRANT 4, PEDESTRIAN VOLUME **(100% Thresholds)**

WARRANT 4	NOT EVALUATED			
	STANDARD A	NOT SATISFIED	0	HOURS
	STANDARD B	NOT SATISFIED	0	HOURS

WARRANT 5, SCHOOL CROSSING

WARRANT 5 NOT EVALUATED

WARRANT 6, COORDINATED SIGNAL SYSTEM

WARRANT 6 NOT EVALUATED

WARRANT 7, CRASH EXPERIENCE

WARRANT 7 NOT EVALUATED

WARRANT 8, ROADWAY NETWORK

WARRANT 8 NOT EVALUATED

WARRANT 9, INTERSECTION NEAR A GRADE CROSSING

WARRANT 9 NOT EVALUATED

JACOBS ENGINEERING

SIGNAL WARRANT ANALYSIS SUMMARY REPORT:
Bellville Rd @ I-75 SB Ramps
Build 2042 (Adjusted for Heavy Vehicles)

Project Number :	CB506050	Report Date :	November 28, 2016
Analyst :	GKW	Counts Date :	Fall 2016
Major Street :	Bellville Rd		
Minor Street :	I-75 SB Ramps		
Speed on Major Street :	45		
Lanes @ Intersection :	Major Street - 1		
	Minor Street - 1		

WARRANT 1, EIGHT-HOUR VEHICULAR VOLUME **100% Thresholds**

WARRANT 1	**SATISFIED**				
	STANDARD 1	**SATISFIED**	CONDITION A	13	HOURS
			CONDITION B	1	HOURS
	STANDARD 2	**SATISFIED**	CONDITION A	15	HOURS
			CONDITION B	11	HOURS

WARRANT 2, FOUR-HOUR VEHICULAR VOLUME **100% Thresholds**

WARRANT 2	**SATISFIED**		12	HOURS

WARRANT 3, PEAK HOUR VEHICULAR VOLUME **100% Thresholds**

WARRANT 3	**SATISFIED**			
	STANDARD A	**NOT EVALUATED**	0	VEHICLE HOURS
	STANDARD B	**SATISFIED**	8	HOURS

WARRANT 4, PEDESTRIAN VOLUME **100% Thresholds**

WARRANT 4	**NOT EVALUATED**			
	STANDARD A	**NOT SATISFIED**	0	HOURS
	STANDARD B	**NOT SATISFIED**	0	HOURS

WARRANT 5, SCHOOL CROSSING

WARRANT 5 **NOT EVALUATED**

WARRANT 6, COORDINATED SIGNAL SYSTEM

WARRANT 6 **NOT EVALUATED**

WARRANT 7, CRASH EXPERIENCE

WARRANT 7 **NOT EVALUATED**

WARRANT 8, ROADWAY NETWORK

WARRANT 8 **NOT EVALUATED**

WARRANT 9, INTERSECTION NEAR A GRADE CROSSING

WARRANT 9 **NOT EVALUATED**

JACOBS ENGINEERING

SIGNAL WARRANT ANALYSIS SUMMARY REPORT:
Bellville Rd @ I-75 SB Ramps
Build 2042 (Adjusted for Heavy Vehicles)

Analyst : GKW
Major Street : Bellville Rd
Minor Street : I-75 SB Ramps
Speed on Major Street : 45

Report Date : November 28, 2016
Counts Date : Fall 2016
Lanes @ Intersection : Major Street - 1
Minor Street - 1

24-HOUR TRAFFIC VOLUME

TABLE 1

Time	Minor Street Northbound				Minor Street Southbound			
24 Hours	Total Approach Volume	Right Turn	% Right Turn	With 0 % RT Turn Reduction	Total Approach Volume	Right Turn	% Right Turn	With 0% RT Turn Reduction
12:00 AM	0	0	0	0	105	60	57	105
1:00 AM	0	0	0	0	85	45	53	85
2:00 AM	0	0	0	0	85	45	53	85
3:00 AM	0	0	0	0	70	40	57	70
4:00 AM	0	0	0	0	85	45	53	85
5:00 AM	0	0	0	0	135	80	59	135
6:00 AM	0	0	0	0	105	60	57	105
7:00 AM	0	0	0	0	190	110	58	190
8:00 AM	0	0	0	0	240	140	58	240
9:00 AM	0	0	0	0	260	150	58	260
10:00 AM	0	0	0	0	335	195	58	335
11:00 AM	0	0	0	0	305	180	59	305
12:00 PM	0	0	0	0	315	185	59	315
1:00 PM	0	0	0	0	350	200	57	350
2:00 PM	0	0	0	0	365	210	58	365
3:00 PM	0	0	0	0	315	185	59	315
4:00 PM	0	0	0	0	375	220	59	375
5:00 PM	0	0	0	0	430	250	58	430
6:00 PM	0	0	0	0	430	250	58	430
7:00 PM	0	0	0	0	350	200	57	350
8:00 PM	0	0	0	0	200	115	58	200
9:00 PM	0	0	0	0	220	125	57	220
10:00 PM	0	0	0	0	135	80	59	135
11:00 PM	0	0	0	0	165	95	58	165
Total				0				5650

JACOBS ENGINEERING

24-HOUR TRAFFIC VOLUME

TABLE 2

Time	Major Street				Major Street			
	Eastbound				Westbound			
24 Hours	Total Approach Volume	Right Turn	% Right Turn	With 0% RT Turn Reduction	Total Approach Volume	Right Turn	% Right Turn	With 0% RT Turn Reduction
12:00 AM	150	65	43	150	120	0	0	120
1:00 AM	115	50	43	115	95	0	0	95
2:00 AM	70	30	43	70	75	0	0	75
3:00 AM	135	55	41	135	95	0	0	95
4:00 AM	115	50	43	115	55	0	0	55
5:00 AM	205	85	41	205	95	0	0	95
6:00 AM	270	110	41	270	125	0	0	125
7:00 AM	335	135	40	335	170	0	0	170
8:00 AM	350	145	41	350	215	0	0	215
9:00 AM	405	165	41	405	260	0	0	260
10:00 AM	410	165	40	410	240	0	0	240
11:00 AM	370	150	41	370	270	0	0	270
12:00 PM	370	150	41	370	340	0	0	340
1:00 PM	380	160	42	380	285	0	0	285
2:00 PM	365	150	41	365	290	0	0	290
3:00 PM	420	175	42	420	340	0	0	340
4:00 PM	390	160	41	390	290	0	0	290
5:00 PM	325	135	42	325	290	0	0	290
6:00 PM	380	160	42	380	315	0	0	315
7:00 PM	365	150	41	365	290	0	0	290
8:00 PM	205	85	41	205	200	0	0	200
9:00 PM	250	105	42	250	230	0	0	230
10:00 PM	160	65	41	160	165	0	0	165
11:00 PM	120	50	42	120	185	0	0	185
Total				6660				5035

JACOBS ENGINEERING

WARRANT ANALYSIS RESULTS - Bellville Rd @ I-75 SB Ramps

WARRANT 1 - EIGHT-HOUR VEHICULAR VOLUME (100% Thresholds)

WARRANT 1* SATISFIED

STANDARD 1	SATISFIED	CONDITION A	13	HOURS
		CONDITION B	1	HOURS
STANDARD 2	SATISFIED	CONDITION A	15	HOURS
		CONDITION B	11	HOURS

24-HOUR TRAFFIC VOLUME EVALUATION

TABLE 3

HOUR OF DAY	MAJOR ST TOTAL OF BOTH APPROACHES	MINOR ST HIGH VOLUME APPROACH	WARRANT 1			
			STANDARD 1		STANDARD 2	
			CONDITION A	CONDITION B	CONDITION A	CONDITION B
12:00 AM	270	105	0	MINOR	0	MINOR
1:00 AM	210	85	0	MINOR	0	MINOR
2:00 AM	145	85	0	MINOR	0	MINOR
3:00 AM	230	70	0	0	0	MINOR
4:00 AM	170	85	0	MINOR	0	MINOR
5:00 AM	300	135	0	MINOR	MINOR	MINOR
6:00 AM	395	105	0	MINOR	0	MINOR
7:00 AM	505	190	BOTH	MINOR	BOTH	MINOR
8:00 AM	565	240	BOTH	MINOR	BOTH	MINOR
9:00 AM	665	260	BOTH	MINOR	BOTH	BOTH
10:00 AM	650	335	BOTH	MINOR	BOTH	BOTH
11:00 AM	640	305	BOTH	MINOR	BOTH	BOTH
12:00 PM	710	315	BOTH	MINOR	BOTH	BOTH
1:00 PM	665	350	BOTH	MINOR	BOTH	BOTH
2:00 PM	655	365	BOTH	MINOR	BOTH	BOTH
3:00 PM	760	315	BOTH	BOTH	BOTH	BOTH
4:00 PM	680	375	BOTH	MINOR	BOTH	BOTH
5:00 PM	615	430	BOTH	MINOR	BOTH	BOTH
6:00 PM	695	430	BOTH	MINOR	BOTH	BOTH
7:00 PM	655	350	BOTH	MINOR	BOTH	BOTH
8:00 PM	405	200	MINOR	MINOR	BOTH	MINOR
9:00 PM	480	220	MINOR	MINOR	BOTH	MINOR
10:00 PM	325	135	0	MINOR	MINOR	MINOR
11:00 PM	305	165	MINOR	MINOR	MINOR	MINOR
TOTAL	11695	5650				

CRITERIA**		STANDARD 1 - 100%		STANDARD 2 - 80%	
		CONDITION A	CONDITION B	CONDITION A	CONDITION B
	MAJOR ST	500	750	400	600
	MINOR ST	150	75	120	60
NO. OF HOURS MET		13	1	15	11

JACOBS ENGINEERING

WARRANT 2, FOUR-HOUR VEHICULAR VOLUME **(100% Thresholds)**

WARRANT 2* SATISFIED 12 HOURS

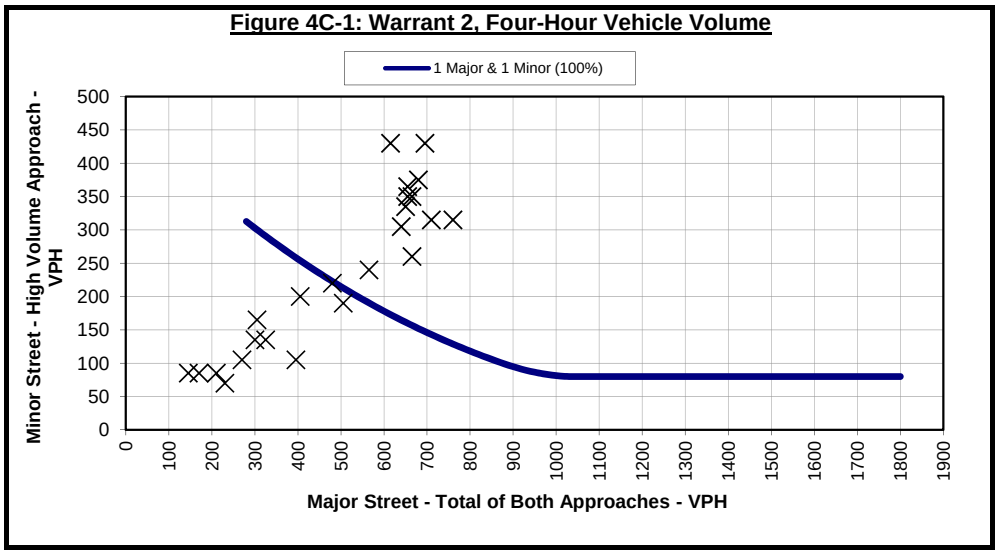

*Note: Curves for minimum volumes are based on the curves from FIGURES 4C-1 & 4C-2, MUTCD Section 4C.04

WARRANT 3, PEAK HOUR **(100% Thresholds)**

STANDARD A NOT EVALUATED 0 VEHICLE HOURS

0	Peak Hour Minor-Street Volume
0	Average Minor-Street Delay (seconds)
1	Number of Approach Lanes (Minor Street)

STANDARD B* SATISFIED 8 HOURS

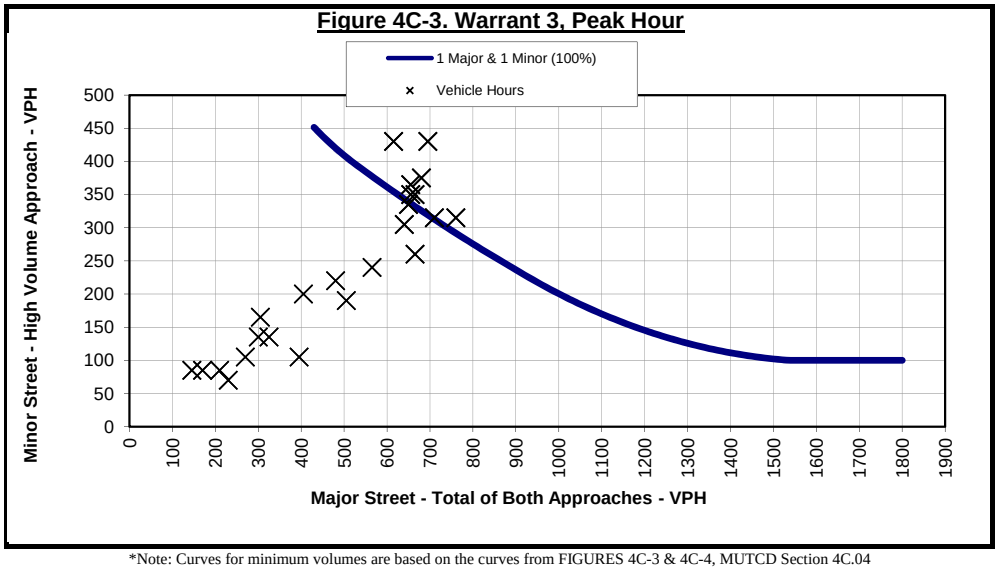

*Note: Curves for minimum volumes are based on the curves from FIGURES 4C-3 & 4C-4, MUTCD Section 4C.04

JACOBS ENGINEERING

WARRANT 4, PEDESTRIAN VOLUME **(100% Thresholds)**

WARRANT 4	NOT EVALUATED			
	STANDARD A	NOT SATISFIED	0	HOURS
	STANDARD B	NOT SATISFIED	0	HOURS

WARRANT 5, SCHOOL CROSSING

WARRANT 5 NOT EVALUATED

WARRANT 6, COORDINATED SIGNAL SYSTEM

WARRANT 6 NOT EVALUATED

WARRANT 7, CRASH EXPERIENCE

WARRANT 7 NOT EVALUATED

WARRANT 8, ROADWAY NETWORK

WARRANT 8 NOT EVALUATED

WARRANT 9, INTERSECTION NEAR A GRADE CROSSING

WARRANT 9 NOT EVALUATED

Appendix G. Existing Intersection Analysis

Intersection	
Int Delay, s/veh	3.5

Movement	EBL	EBT	EBR	WBL	WBT	WBR	NBL	NBT	NBR	SBL	SBT	SBR
Lane Configurations												
Traffic Vol, veh/h	0	85	50	25	55	0	0	0	0	25	0	50
Future Vol, veh/h	0	85	50	25	55	0	0	0	0	25	0	50
Conflicting Peds, #/hr	0	0	0	0	0	0	0	0	0	0	0	0
Sign Control	Free	Free	Free	Free	Free	Free	Stop	Stop	Stop	Stop	Stop	Stop
RT Channelized	-	-	None	-	-	None	-	-	None	-	-	None
Storage Length	-	-	-	-	-	-	-	-	-	-	-	-
Veh in Median Storage, #	-	0	-	-	0	-	-	-	-	-	0	-
Grade, %	-	0	-	-	0	-	-	0	-	-	0	-
Peak Hour Factor	92	92	92	90	90	90	92	92	92	83	83	83
Heavy Vehicles, %	62	62	62	50	50	50	2	2	2	56	56	56
Mvmt Flow	0	92	54	28	61	0	0	0	0	30	0	60

Major/Minor	Major1			Major2			Minor2		
Conflicting Flow All	-	0	0	147	0	0	237	264	61
Stage 1	-	-	-	-	-	-	117	117	-
Stage 2	-	-	-	-	-	-	120	147	-
Critical Hdwy	-	-	-	4.6	-	-	6.96	7.06	6.76
Critical Hdwy Stg 1	-	-	-	-	-	-	5.96	6.06	-
Critical Hdwy Stg 2	-	-	-	-	-	-	5.96	6.06	-
Follow-up Hdwy	-	-	-	2.65	-	-	4.004	4.504	3.804
Pot Cap-1 Maneuver	0	-	-	1188	-	0	647	559	871
Stage 1	0	-	-	-	-	0	790	706	-
Stage 2	0	-	-	-	-	0	787	683	-
Platoon blocked, %		-	-		-				
Mov Cap-1 Maneuver	-	-	-	1188	-	-	631	0	871
Mov Cap-2 Maneuver	-	-	-	-	-	-	631	0	-
Stage 1	-	-	-	-	-	-	771	0	-
Stage 2	-	-	-	-	-	-	787	0	-

Approach	EB	WB	SB
HCM Control Delay, s	0	2.5	10.3
HCM LOS			B

Minor Lane/Major Mvmt	EBT	EBR	WBL	WBT	SBLn1
Capacity (veh/h)	-	-	1188	-	773
HCM Lane V/C Ratio	-	-	0.023	-	0.117
HCM Control Delay (s)	-	-	8.1	0	10.3
HCM Lane LOS	-	-	A	A	B
HCM 95th %tile Q(veh)	-	-	0.1	-	0.4

Intersection	
Int Delay, s/veh	4.6

Movement	EBL	EBT	EBR	WBL	WBT	WBR	NBL	NBT	NBR	SBL	SBT	SBR
Lane Configurations												
Traffic Vol, veh/h	0	70	65	30	70	0	0	0	0	50	0	70
Future Vol, veh/h	0	70	65	30	70	0	0	0	0	50	0	70
Conflicting Peds, #/hr	0	0	0	0	0	0	0	0	0	0	0	0
Sign Control	Free	Free	Free	Free	Free	Free	Stop	Stop	Stop	Stop	Stop	Stop
RT Channelized	-	-	None	-	-	None	-	-	None	-	-	None
Storage Length	-	-	-	-	-	-	-	-	-	-	-	-
Veh in Median Storage, #	-	0	-	-	0	-	-	-	-	-	0	-
Grade, %	-	0	-	-	0	-	-	0	-	-	0	-
Peak Hour Factor	81	81	81	81	81	81	92	92	92	78	78	78
Heavy Vehicles, %	50	50	50	46	46	46	2	2	2	49	49	49
Mvmt Flow	0	86	80	37	86	0	0	0	0	64	0	90

Major/Minor	Major1			Major2			Minor2		
Conflicting Flow All	-	0	0	167	0	0	287	327	86
Stage 1	-	-	-	-	-	-	160	160	-
Stage 2	-	-	-	-	-	-	127	167	-
Critical Hdwy	-	-	-	4.56	-	-	6.89	6.99	6.69
Critical Hdwy Stg 1	-	-	-	-	-	-	5.89	5.99	-
Critical Hdwy Stg 2	-	-	-	-	-	-	5.89	5.99	-
Follow-up Hdwy	-	-	-	2.614	-	-	3.941	4.441	3.741
Pot Cap-1 Maneuver	0	-	-	1184	-	0	615	522	857
Stage 1	0	-	-	-	-	0	766	684	-
Stage 2	0	-	-	-	-	0	795	679	-
Platoon blocked, %		-	-		-				
Mov Cap-1 Maneuver	-	-	-	1184	-	-	595	0	857
Mov Cap-2 Maneuver	-	-	-	-	-	-	595	0	-
Stage 1	-	-	-	-	-	-	741	0	-
Stage 2	-	-	-	-	-	-	795	0	-

Approach	EB	WB	SB
HCM Control Delay, s	0	2.4	11.3
HCM LOS			B

Minor Lane/Major Mvmt	EBT	EBR	WBL	WBT	SBLn1
Capacity (veh/h)	-	-	1184	-	724
HCM Lane V/C Ratio	-	-	0.031	-	0.212
HCM Control Delay (s)	-	-	8.1	0	11.3
HCM Lane LOS	-	-	A	A	B
HCM 95th %tile Q(veh)	-	-	0.1	-	0.8

Appendix H. Future Intersection Analysis (No Signal)

Intersection	
Int Delay, s/veh	3.5

Movement	EBL	EBT	EBR	WBL	WBT	WBR	NBL	NBT	NBR	SBL	SBT	SBR
Lane Configurations												
Traffic Vol, veh/h	0	105	60	30	65	0	0	0	0	25	0	60
Future Vol, veh/h	0	105	60	30	65	0	0	0	0	25	0	60
Conflicting Peds, #/hr	0	0	0	0	0	0	0	0	0	0	0	0
Sign Control	Free	Free	Free	Free	Free	Free	Stop	Stop	Stop	Stop	Stop	Stop
RT Channelized	-	-	None	-	-	None	-	-	None	-	-	None
Storage Length	-	-	-	-	-	-	-	-	-	-	-	-
Veh in Median Storage, #	-	0	-	-	0	-	-	-	-	-	0	-
Grade, %	-	0	-	-	0	-	-	0	-	-	0	-
Peak Hour Factor	92	92	92	90	90	90	92	92	92	83	83	83
Heavy Vehicles, %	62	62	62	50	50	50	2	2	2	56	56	56
Mvmt Flow	0	114	65	33	72	0	0	0	0	30	0	72

Major/Minor	Major1			Major2			Minor2		
Conflicting Flow All	-	0	0	179	0	0	286	318	72
Stage 1	-	-	-	-	-	-	139	139	-
Stage 2	-	-	-	-	-	-	147	179	-
Critical Hdwy	-	-	-	4.6	-	-	7.66	7.06	6.76
Critical Hdwy Stg 1	-	-	-	-	-	-	6.66	6.06	-
Critical Hdwy Stg 2	-	-	-	-	-	-	6.66	6.06	-
Follow-up Hdwy	-	-	-	2.65	-	-	4.004	4.504	3.804
Pot Cap-1 Maneuver	0	-	-	1154	-	0	571	519	859
Stage 1	0	-	-	-	-	0	750	689	-
Stage 2	0	-	-	-	-	0	743	660	-
Platoon blocked, %		-	-		-				
Mov Cap-1 Maneuver	-	-	-	1154	-	-	558	503	859
Mov Cap-2 Maneuver	-	-	-	-	-	-	558	503	-
Stage 1	-	-	-	-	-	-	750	668	-
Stage 2	-	-	-	-	-	-	743	660	-

Approach	EB	WB	SB
HCM Control Delay, s	0	2.6	10.6
HCM LOS			B

Minor Lane/Major Mvmt	EBT	EBR	WBL	WBT	SBLn1
Capacity (veh/h)	-	-	1154	-	741
HCM Lane V/C Ratio	-	-	0.029	-	0.138
HCM Control Delay (s)	-	-	8.2	0	10.6
HCM Lane LOS	-	-	A	A	B
HCM 95th %tile Q(veh)	-	-	0.1	-	0.5

Intersection	
Int Delay, s/veh	5

Movement	EBL	EBT	EBR	WBL	WBT	WBR	NBL	NBT	NBR	SBL	SBT	SBR
Lane Configurations												
Traffic Vol, veh/h	0	80	75	35	80	0	0	0	0	60	0	80
Future Vol, veh/h	0	80	75	35	80	0	0	0	0	60	0	80
Conflicting Peds, #/hr	0	0	0	0	0	0	0	0	0	0	0	0
Sign Control	Free	Free	Free	Free	Free	Free	Stop	Stop	Stop	Stop	Stop	Stop
RT Channelized	-	-	None	-	-	None	-	-	None	-	-	None
Storage Length	-	-	-	-	-	-	-	-	-	-	-	-
Veh in Median Storage, #	-	0	-	-	0	-	-	-	-	-	0	-
Grade, %	-	0	-	-	0	-	-	0	-	-	0	-
Peak Hour Factor	81	81	81	81	81	81	92	92	92	78	78	78
Heavy Vehicles, %	50	50	50	46	46	46	2	2	2	49	49	49
Mvmt Flow	0	99	93	43	99	0	0	0	0	77	0	103

Major/Minor	Major1			Major2			Minor2		
Conflicting Flow All	-	0	0	191	0	0	330	376	99
Stage 1	-	-	-	-	-	-	185	185	-
Stage 2	-	-	-	-	-	-	145	191	-
Critical Hdwy	-	-	-	4.56	-	-	7.59	6.99	6.69
Critical Hdwy Stg 1	-	-	-	-	-	-	6.59	5.99	-
Critical Hdwy Stg 2	-	-	-	-	-	-	6.59	5.99	-
Follow-up Hdwy	-	-	-	2.614	-	-	3.941	4.441	3.741
Pot Cap-1 Maneuver	0	-	-	1158	-	0	543	488	842
Stage 1	0	-	-	-	-	0	719	666	-
Stage 2	0	-	-	-	-	0	758	662	-
Platoon blocked, %		-	-		-				
Mov Cap-1 Maneuver	-	-	-	1158	-	-	527	469	842
Mov Cap-2 Maneuver	-	-	-	-	-	-	527	469	-
Stage 1	-	-	-	-	-	-	719	640	-
Stage 2	-	-	-	-	-	-	758	662	-

Approach	EB	WB	SB
HCM Control Delay, s	0	2.5	12.3
HCM LOS			B

Minor Lane/Major Mvmt	EBT	EBR	WBL	WBT	SBLn1
Capacity (veh/h)	-	-	1158	-	670
HCM Lane V/C Ratio	-	-	0.037	-	0.268
HCM Control Delay (s)	-	-	8.2	0	12.3
HCM Lane LOS	-	-	A	A	B
HCM 95th %tile Q(veh)	-	-	0.1	-	1.1

Intersection	
Int Delay, s/veh	4

Movement	EBL	EBT	EBR	WBL	WBT	WBR	NBL	NBT	NBR	SBL	SBT	SBR
Lane Configurations												
Traffic Vol, veh/h	0	175	100	50	105	0	0	0	0	40	0	100
Future Vol, veh/h	0	175	100	50	105	0	0	0	0	40	0	100
Conflicting Peds, #/hr	0	0	0	0	0	0	0	0	0	0	0	0
Sign Control	Free	Free	Free	Free	Free	Free	Stop	Stop	Stop	Stop	Stop	Stop
RT Channelized	-	-	None	-	-	None	-	-	None	-	-	None
Storage Length	-	-	-	-	-	-	-	-	-	-	-	-
Veh in Median Storage, #	-	0	-	-	0	-	-	-	-	-	0	-
Grade, %	-	0	-	-	0	-	-	0	-	-	0	-
Peak Hour Factor	92	92	92	90	90	90	92	92	92	83	83	83
Heavy Vehicles, %	62	62	62	50	50	50	2	2	2	56	56	56
Mvmt Flow	0	190	109	56	117	0	0	0	0	48	0	120

Major/Minor	Major1			Major2			Minor2		
Conflicting Flow All	-	0	0	299	0	0	473	527	117
Stage 1	-	-	-	-	-	-	228	228	-
Stage 2	-	-	-	-	-	-	245	299	-
Critical Hdwy	-	-	-	4.6	-	-	6.96	7.06	6.76
Critical Hdwy Stg 1	-	-	-	-	-	-	5.96	6.06	-
Critical Hdwy Stg 2	-	-	-	-	-	-	5.96	6.06	-
Follow-up Hdwy	-	-	-	2.65	-	-	4.004	4.504	3.804
Pot Cap-1 Maneuver	0	-	-	1033	-	0	463	388	808
Stage 1	0	-	-	-	-	0	698	626	-
Stage 2	0	-	-	-	-	0	685	579	-
Platoon blocked, %		-	-		-				
Mov Cap-1 Maneuver	-	-	-	1033	-	-	436	0	808
Mov Cap-2 Maneuver	-	-	-	-	-	-	436	0	-
Stage 1	-	-	-	-	-	-	658	0	-
Stage 2	-	-	-	-	-	-	685	0	-

Approach	EB	WB	SB
HCM Control Delay, s	0	2.8	12.5
HCM LOS			B

Minor Lane/Major Mvmt	EBT	EBR	WBL	WBT	SBLn1
Capacity (veh/h)	-	-	1033	-	650
HCM Lane V/C Ratio	-	-	0.054	-	0.259
HCM Control Delay (s)	-	-	8.7	0	12.5
HCM Lane LOS	-	-	A	A	B
HCM 95th %tile Q(veh)	-	-	0.2	-	1

Intersection	
Int Delay, s/veh	7.3

Movement	EBL	EBT	EBR	WBL	WBT	WBR	NBL	NBT	NBR	SBL	SBT	SBR
Lane Configurations												
Traffic Vol, veh/h	0	130	125	55	130	0	0	0	0	100	0	130
Future Vol, veh/h	0	130	125	55	130	0	0	0	0	100	0	130
Conflicting Peds, #/hr	0	0	0	0	0	0	0	0	0	0	0	0
Sign Control	Free	Free	Free	Free	Free	Free	Stop	Stop	Stop	Stop	Stop	Stop
RT Channelized	-	-	None	-	-	None	-	-	None	-	-	None
Storage Length	-	-	-	-	-	-	-	-	-	-	-	-
Veh in Median Storage, #	-	0	-	-	0	-	-	-	-	-	0	-
Grade, %	-	0	-	-	0	-	-	0	-	-	0	-
Peak Hour Factor	81	81	81	81	81	81	92	92	92	78	78	78
Heavy Vehicles, %	50	50	50	46	46	46	2	2	2	49	49	49
Mvmt Flow	0	160	154	68	160	0	0	0	0	128	0	167

Major/Minor	Major1			Major2			Minor2		
Conflicting Flow All	-	0	0	315	0	0	534	611	160
Stage 1	-	-	-	-	-	-	296	296	-
Stage 2	-	-	-	-	-	-	238	315	-
Critical Hdwy	-	-	-	4.56	-	-	6.89	6.99	6.69
Critical Hdwy Stg 1	-	-	-	-	-	-	5.89	5.99	-
Critical Hdwy Stg 2	-	-	-	-	-	-	5.89	5.99	-
Follow-up Hdwy	-	-	-	2.614	-	-	3.941	4.441	3.741
Pot Cap-1 Maneuver	0	-	-	1034	-	0	434	352	776
Stage 1	0	-	-	-	-	0	659	591	-
Stage 2	0	-	-	-	-	0	703	579	-
Platoon blocked, %		-	-		-				
Mov Cap-1 Maneuver	-	-	-	1034	-	-	403	0	776
Mov Cap-2 Maneuver	-	-	-	-	-	-	403	0	-
Stage 1	-	-	-	-	-	-	612	0	-
Stage 2	-	-	-	-	-	-	703	0	-

Approach	EB	WB	SB
HCM Control Delay, s	0	2.6	18.7
HCM LOS			C

Minor Lane/Major Mvmt	EBT	EBR	WBL	WBT	SBLn1
Capacity (veh/h)	-	-	1034	-	553
HCM Lane V/C Ratio	-	-	0.066	-	0.533
HCM Control Delay (s)	-	-	8.7	0	18.7
HCM Lane LOS	-	-	A	A	C
HCM 95th %tile Q(veh)	-	-	0.2	-	3.1

Intersection	
Int Delay, s/veh	3.4

Movement	EBL	EBT	EBR	WBL	WBT	WBR	NBL	NBT	NBR	SBL	SBT	SBR
Lane Configurations												
Traffic Vol, veh/h	0	105	60	30	65	0	0	0	0	25	0	60
Future Vol, veh/h	0	105	60	30	65	0	0	0	0	25	0	60
Conflicting Peds, #/hr	0	0	0	0	0	0	0	0	0	0	0	0
Sign Control	Free	Free	Free	Free	Free	Free	Stop	Stop	Stop	Stop	Stop	Stop
RT Channelized	-	-	None	-	-	None	-	-	None	-	-	None
Storage Length	-	-	250	0	-	-	-	-	-	-	-	-
Veh in Median Storage, #	-	0	-	-	0	-	-	-	-	-	0	-
Grade, %	-	0	-	-	0	-	-	0	-	-	0	-
Peak Hour Factor	92	92	92	90	90	90	92	92	92	83	83	83
Heavy Vehicles, %	62	62	62	50	50	50	2	2	2	56	56	56
Mvmt Flow	0	114	65	33	72	0	0	0	0	30	0	72

Major/Minor	Major1			Major2			Minor2		
Conflicting Flow All	-	0	0	114	0	0	253	253	72
Stage 1	-	-	-	-	-	-	139	139	-
Stage 2	-	-	-	-	-	-	114	114	-
Critical Hdwy	-	-	-	4.6	-	-	6.96	7.06	6.76
Critical Hdwy Stg 1	-	-	-	-	-	-	5.96	6.06	-
Critical Hdwy Stg 2	-	-	-	-	-	-	5.96	6.06	-
Follow-up Hdwy	-	-	-	2.65	-	-	4.004	4.504	3.804
Pot Cap-1 Maneuver	0	-	-	1224	-	0	632	568	859
Stage 1	0	-	-	-	-	0	771	689	-
Stage 2	0	-	-	-	-	0	793	708	-
Platoon blocked, %		-	-		-				
Mov Cap-1 Maneuver	-	-	-	1224	-	-	615	0	859
Mov Cap-2 Maneuver	-	-	-	-	-	-	615	0	-
Stage 1	-	-	-	-	-	-	750	0	-
Stage 2	-	-	-	-	-	-	793	0	-

Approach	EB	WB	SB
HCM Control Delay, s	0	2.5	10.4
HCM LOS			B

Minor Lane/Major Mvmt	EBT	EBR	WBL	WBT	SBLn1
Capacity (veh/h)	-	-	1224	-	769
HCM Lane V/C Ratio	-	-	0.027	-	0.133
HCM Control Delay (s)	-	-	8	-	10.4
HCM Lane LOS	-	-	A	-	B
HCM 95th %tile Q(veh)	-	-	0.1	-	0.5

Intersection	
Int Delay, s/veh	4.8

Movement	EBL	EBT	EBR	WBL	WBT	WBR	NBL	NBT	NBR	SBL	SBT	SBR
Lane Configurations												
Traffic Vol, veh/h	0	80	75	35	80	0	0	0	0	60	0	80
Future Vol, veh/h	0	80	75	35	80	0	0	0	0	60	0	80
Conflicting Peds, #/hr	0	0	0	0	0	0	0	0	0	0	0	0
Sign Control	Free	Free	Free	Free	Free	Free	Stop	Stop	Stop	Stop	Stop	Stop
RT Channelized	-	-	None	-	-	None	-	-	None	-	-	None
Storage Length	-	-	250	0	-	-	-	-	-	-	-	-
Veh in Median Storage, #	-	0	-	-	0	-	-	-	-	-	0	-
Grade, %	-	0	-	-	0	-	-	0	-	-	0	-
Peak Hour Factor	81	81	81	81	81	81	92	92	92	78	78	78
Heavy Vehicles, %	50	50	50	46	46	46	2	2	2	49	49	49
Mvmt Flow	0	99	93	43	99	0	0	0	0	77	0	103

Major/Minor	Major1			Major2			Minor2		
Conflicting Flow All	-	0	0	99	0	0	284	284	99
Stage 1	-	-	-	-	-	-	185	185	-
Stage 2	-	-	-	-	-	-	99	99	-
Critical Hdwy	-	-	-	4.56	-	-	6.89	6.99	6.69
Critical Hdwy Stg 1	-	-	-	-	-	-	5.89	5.99	-
Critical Hdwy Stg 2	-	-	-	-	-	-	5.89	5.99	-
Follow-up Hdwy	-	-	-	2.614	-	-	3.941	4.441	3.741
Pot Cap-1 Maneuver	0	-	-	1259	-	0	617	554	842
Stage 1	0	-	-	-	-	0	746	666	-
Stage 2	0	-	-	-	-	0	820	730	-
Platoon blocked, %		-	-		-				
Mov Cap-1 Maneuver	-	-	-	1259	-	-	596	0	842
Mov Cap-2 Maneuver	-	-	-	-	-	-	596	0	-
Stage 1	-	-	-	-	-	-	721	0	-
Stage 2	-	-	-	-	-	-	820	0	-

Approach	EB	WB	SB
HCM Control Delay, s	0	2.4	11.7
HCM LOS			B

Minor Lane/Major Mvmt	EBT	EBR	WBL	WBT	SBLn1
Capacity (veh/h)	-	-	1259	-	715
HCM Lane V/C Ratio	-	-	0.034	-	0.251
HCM Control Delay (s)	-	-	8	-	11.7
HCM Lane LOS	-	-	A	-	B
HCM 95th %tile Q(veh)	-	-	0.1	-	1

Intersection	
Int Delay, s/veh	3.9

Movement	EBL	EBT	EBR	WBL	WBT	WBR	NBL	NBT	NBR	SBL	SBT	SBR
Lane Configurations												
Traffic Vol, veh/h	0	175	100	50	105	0	0	0	0	40	0	100
Future Vol, veh/h	0	175	100	50	105	0	0	0	0	40	0	100
Conflicting Peds, #/hr	0	0	0	0	0	0	0	0	0	0	0	0
Sign Control	Free	Free	Free	Free	Free	Free	Stop	Stop	Stop	Stop	Stop	Stop
RT Channelized	-	-	None	-	-	None	-	-	None	-	-	None
Storage Length	-	-	250	0	-	-	-	-	-	-	-	-
Veh in Median Storage, #	-	0	-	-	0	-	-	-	-	-	0	-
Grade, %	-	0	-	-	0	-	-	0	-	-	0	-
Peak Hour Factor	92	92	92	90	90	90	92	92	92	83	83	83
Heavy Vehicles, %	62	62	62	50	50	50	2	2	2	56	56	56
Mvmt Flow	0	190	109	56	117	0	0	0	0	48	0	120

Major/Minor	Major1			Major2			Minor2		
Conflicting Flow All	-	0	0	190	0	0	418	418	117
Stage 1	-	-	-	-	-	-	228	228	-
Stage 2	-	-	-	-	-	-	190	190	-
Critical Hdwy	-	-	-	4.6	-	-	6.96	7.06	6.76
Critical Hdwy Stg 1	-	-	-	-	-	-	5.96	6.06	-
Critical Hdwy Stg 2	-	-	-	-	-	-	5.96	6.06	-
Follow-up Hdwy	-	-	-	2.65	-	-	4.004	4.504	3.804
Pot Cap-1 Maneuver	0	-	-	1142	-	0	501	452	808
Stage 1	0	-	-	-	-	0	698	626	-
Stage 2	0	-	-	-	-	0	728	652	-
Platoon blocked, %		-	-		-				
Mov Cap-1 Maneuver	-	-	-	1142	-	-	476	0	808
Mov Cap-2 Maneuver	-	-	-	-	-	-	476	0	-
Stage 1	-	-	-	-	-	-	664	0	-
Stage 2	-	-	-	-	-	-	728	0	-

Approach	EB	WB	SB
HCM Control Delay, s	0	2.7	12.1
HCM LOS			B

Minor Lane/Major Mvmt	EBT	EBR	WBL	WBT	SBLn1
Capacity (veh/h)	-	-	1142	-	674
HCM Lane V/C Ratio	-	-	0.049	-	0.25
HCM Control Delay (s)	-	-	8.3	-	12.1
HCM Lane LOS	-	-	A	-	B
HCM 95th %tile Q(veh)	-	-	0.2	-	1

Intersection	
Int Delay, s/veh	6.6

Movement	EBL	EBT	EBR	WBL	WBT	WBR	NBL	NBT	NBR	SBL	SBT	SBR
Lane Configurations												
Traffic Vol, veh/h	0	130	125	55	130	0	0	0	0	100	0	130
Future Vol, veh/h	0	130	125	55	130	0	0	0	0	100	0	130
Conflicting Peds, #/hr	0	0	0	0	0	0	0	0	0	0	0	0
Sign Control	Free	Free	Free	Free	Free	Free	Stop	Stop	Stop	Stop	Stop	Stop
RT Channelized	-	-	None	-	-	None	-	-	None	-	-	None
Storage Length	-	-	250	0	-	-	-	-	-	-	-	-
Veh in Median Storage, #	-	0	-	-	0	-	-	-	-	-	0	-
Grade, %	-	0	-	-	0	-	-	0	-	-	0	-
Peak Hour Factor	81	81	81	81	81	81	92	92	92	78	78	78
Heavy Vehicles, %	50	50	50	46	46	46	2	2	2	49	49	49
Mvmt Flow	0	160	154	68	160	0	0	0	0	128	0	167

Major/Minor	Major1			Major2			Minor2		
Conflicting Flow All	-	0	0	160	0	0	456	456	160
Stage 1	-	-	-	-	-	-	296	296	-
Stage 2	-	-	-	-	-	-	160	160	-
Critical Hdwy	-	-	-	4.56	-	-	6.89	6.99	6.69
Critical Hdwy Stg 1	-	-	-	-	-	-	5.89	5.99	-
Critical Hdwy Stg 2	-	-	-	-	-	-	5.89	5.99	-
Follow-up Hdwy	-	-	-	2.614	-	-	3.941	4.441	3.741
Pot Cap-1 Maneuver	0	-	-	1191	-	0	485	437	776
Stage 1	0	-	-	-	-	0	659	591	-
Stage 2	0	-	-	-	-	0	766	684	-
Platoon blocked, %		-	-		-				
Mov Cap-1 Maneuver	-	-	-	1191	-	-	457	0	776
Mov Cap-2 Maneuver	-	-	-	-	-	-	457	0	-
Stage 1	-	-	-	-	-	-	621	0	-
Stage 2	-	-	-	-	-	-	766	0	-

Approach	EB	WB	SB
HCM Control Delay, s	0	2.4	16.8
HCM LOS			C

Minor Lane/Major Mvmt	EBT	EBR	WBL	WBT	SBLn1
Capacity (veh/h)	-	-	1191	-	595
HCM Lane V/C Ratio	-	-	0.057	-	0.496
HCM Control Delay (s)	-	-	8.2	-	16.8
HCM Lane LOS	-	-	A	-	C
HCM 95th %tile Q(veh)	-	-	0.2	-	2.7

Appendix I. Future Intersection Analysis (With Signal)

Lane Group	EBT	EBR	WBL	WBT	SBT
Lane Configurations					
Traffic Volume (vph)	105	60	30	65	0
Future Volume (vph)	105	60	30	65	0
Turn Type	NA	Perm	Perm	NA	NA
Protected Phases	2			6	4
Permitted Phases		2	6		
Detector Phase	2	2	6	6	4
Switch Phase					
Minimum Initial (s)	5.0	5.0	5.0	5.0	5.0
Minimum Split (s)	23.5	23.5	23.5	23.5	27.5
Total Split (s)	51.0	51.0	51.0	51.0	49.0
Total Split (%)	51.0%	51.0%	51.0%	51.0%	49.0%
Yellow Time (s)	3.5	3.5	3.5	3.5	3.5
All-Red Time (s)	2.0	2.0	2.0	2.0	2.0
Lost Time Adjust (s)	0.0	0.0	0.0	0.0	0.0
Total Lost Time (s)	5.5	5.5	5.5	5.5	5.5
Lead/Lag					
Lead-Lag Optimize?					
Recall Mode	Min	Min	Min	Min	Min

Intersection Summary
Cycle Length: 100
Actuated Cycle Length: 25.9
Natural Cycle: 55
Control Type: Semi Act-Uncoord

Splits and Phases: 1: I-75 SB Ramps & Bellville Road

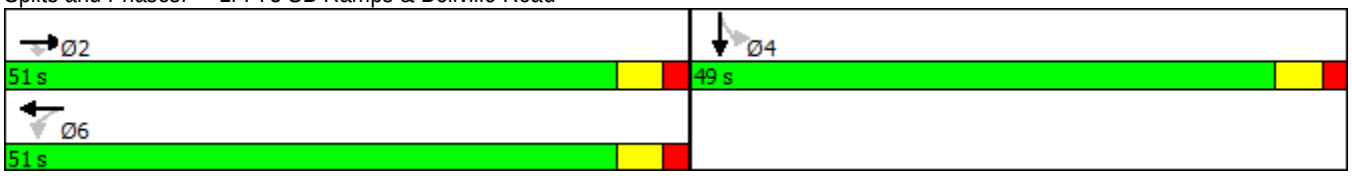

Movement	EBL	EBT	EBR	WBL	WBT	WBR	NBL	NBT	NBR	SBL	SBT	SBR
Lane Configurations												
Traffic Volume (veh/h)	0	105	60	30	65	0	0	0	0	25	0	60
Future Volume (veh/h)	0	105	60	30	65	0	0	0	0	25	0	60
Number	5	2	12	1	6	16				7	4	14
Initial Q (Qb), veh	0	0	0	0	0	0				0	0	0
Ped-Bike Adj(A_pbT)	1.00		1.00	1.00		1.00				1.00		1.00
Parking Bus, Adj	1.00	1.00	1.00	1.00	1.00	1.00				1.00	1.00	1.00
Adj Sat Flow, veh/h/ln	0	1173	1173	1267	1267	0				1900	1218	1900
Adj Flow Rate, veh/h	0	114	65	33	72	0				30	0	72
Adj No. of Lanes	0	1	1	1	1	0				0	1	0
Peak Hour Factor	0.92	0.92	0.92	0.90	0.90	0.90				0.83	0.83	0.83
Percent Heavy Veh, %	0	62	62	50	50	0				0	56	0
Cap, veh/h	0	394	335	515	425	0				65	0	157
Arrive On Green	0.00	0.34	0.34	0.34	0.34	0.00				0.21	0.00	0.21
Sat Flow, veh/h	0	1173	997	816	1267	0				314	0	755
Grp Volume(v), veh/h	0	114	65	33	72	0				102	0	0
Grp Sat Flow(s),veh/h/ln	0	1173	997	816	1267	0				1069	0	0
Q Serve(g_s), s	0.0	1.7	1.1	0.7	1.0	0.0				2.0	0.0	0.0
Cycle Q Clear(g_c), s	0.0	1.7	1.1	2.5	1.0	0.0				2.0	0.0	0.0
Prop In Lane	0.00		1.00	1.00		0.00				0.29		0.71
Lane Grp Cap(c), veh/h	0	394	335	515	425	0				222	0	0
V/C Ratio(X)	0.00	0.29	0.19	0.06	0.17	0.00				0.46	0.00	0.00
Avail Cap(c_a), veh/h	0	2215	1883	1782	2392	0				1930	0	0
HCM Platoon Ratio	1.00	1.00	1.00	1.00	1.00	1.00				1.00	1.00	1.00
Upstream Filter(I)	0.00	1.00	1.00	1.00	1.00	0.00				1.00	0.00	0.00
Uniform Delay (d), s/veh	0.0	5.9	5.7	6.8	5.6	0.0				8.4	0.0	0.0
Incr Delay (d2), s/veh	0.0	0.4	0.3	0.1	0.2	0.0				1.5	0.0	0.0
Initial Q Delay(d3),s/veh	0.0	0.0	0.0	0.0	0.0	0.0				0.0	0.0	0.0
%ile BackOfQ(95%),veh/ln	0.0	1.0	0.6	0.3	0.6	0.0				1.2	0.0	0.0
LnGrp Delay(d),s/veh	0.0	6.3	6.0	6.8	5.8	0.0				9.8	0.0	0.0
LnGrp LOS		A	A	A	A					A		
Approach Vol, veh/h		179			105						102	
Approach Delay, s/veh		6.2			6.1						9.8	
Approach LOS		A			A						A	

Timer	1	2	3	4	5	6	7	8
Assigned Phs		2		4		6		
Phs Duration (G+Y+Rc), s		13.6		10.5		13.6		
Change Period (Y+Rc), s		5.5		5.5		5.5		
Max Green Setting (Gmax), s		45.5		43.5		45.5		
Max Q Clear Time (g_c+I1), s		3.7		4.0		4.5		
Green Ext Time (p_c), s		3.6		0.4		3.6		

Intersection Summary	
HCM 2010 Ctrl Delay	7.1
HCM 2010 LOS	A

Lane Group	EBT	EBR	WBL	WBT	SBT
Lane Configurations					
Traffic Volume (vph)	80	75	35	80	0
Future Volume (vph)	80	75	35	80	0
Turn Type	NA	Perm	Perm	NA	NA
Protected Phases	2			6	4
Permitted Phases		2	6		
Detector Phase	2	2	6	6	4
Switch Phase					
Minimum Initial (s)	5.0	5.0	5.0	5.0	5.0
Minimum Split (s)	23.5	23.5	23.5	23.5	27.5
Total Split (s)	43.0	43.0	43.0	43.0	57.0
Total Split (%)	43.0%	43.0%	43.0%	43.0%	57.0%
Yellow Time (s)	3.5	3.5	3.5	3.5	3.5
All-Red Time (s)	2.0	2.0	2.0	2.0	2.0
Lost Time Adjust (s)	0.0	0.0	0.0	0.0	0.0
Total Lost Time (s)	5.5	5.5	5.5	5.5	5.5
Lead/Lag					
Lead-Lag Optimize?					
Recall Mode	Min	Min	Min	Min	Min

Intersection Summary
Cycle Length: 100
Actuated Cycle Length: 26.9
Natural Cycle: 55
Control Type: Actuated-Uncoordinated

Splits and Phases: 1: I-75 SB Ramps & Bellville Road

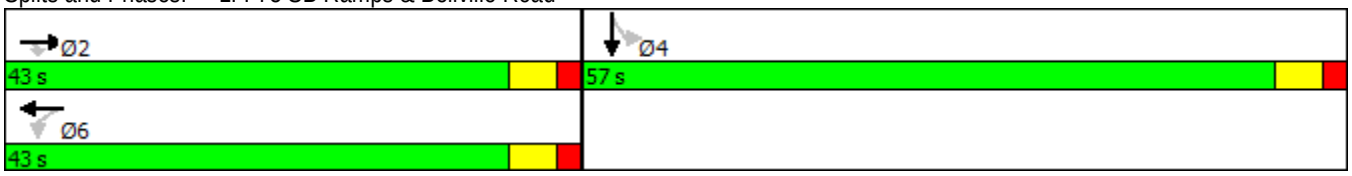

Movement	EBL	EBT	EBR	WBL	WBT	WBR	NBL	NBT	NBR	SBL	SBT	SBR
Lane Configurations												
Traffic Volume (veh/h)	0	80	75	35	80	0	0	0	0	60	0	80
Future Volume (veh/h)	0	80	75	35	80	0	0	0	0	60	0	80
Number	5	2	12	1	6	16				7	4	14
Initial Q (Qb), veh	0	0	0	0	0	0				0	0	0
Ped-Bike Adj(A_pbT)	1.00		1.00	1.00		1.00				1.00		1.00
Parking Bus, Adj	1.00	1.00	1.00	1.00	1.00	1.00				1.00	1.00	1.00
Adj Sat Flow, veh/h/ln	0	1267	1267	1301	1301	0				1900	1275	1900
Adj Flow Rate, veh/h	0	99	93	43	99	0				77	0	103
Adj No. of Lanes	0	1	1	1	1	0				0	1	0
Peak Hour Factor	0.81	0.81	0.81	0.81	0.81	0.81				0.78	0.78	0.78
Percent Heavy Veh, %	0	50	50	46	46	0				0	49	0
Cap, veh/h	0	409	348	502	420	0				120	0	160
Arrive On Green	0.00	0.32	0.32	0.32	0.32	0.00				0.25	0.00	0.25
Sat Flow, veh/h	0	1267	1077	829	1301	0				486	0	650
Grp Volume(v), veh/h	0	99	93	43	99	0				180	0	0
Grp Sat Flow(s),veh/h/ln	0	1267	1077	829	1301	0				1136	0	0
Q Serve(g_s), s	0.0	1.5	1.6	1.0	1.4	0.0				3.6	0.0	0.0
Cycle Q Clear(g_c), s	0.0	1.5	1.6	2.5	1.4	0.0				3.6	0.0	0.0
Prop In Lane	0.00		1.00	1.00		0.00				0.43		0.57
Lane Grp Cap(c), veh/h	0	409	348	502	420	0				280	0	0
V/C Ratio(X)	0.00	0.24	0.27	0.09	0.24	0.00				0.64	0.00	0.00
Avail Cap(c_a), veh/h	0	1858	1579	1449	1909	0				2288	0	0
HCM Platoon Ratio	1.00	1.00	1.00	1.00	1.00	1.00				1.00	1.00	1.00
Upstream Filter(I)	0.00	1.00	1.00	1.00	1.00	0.00				1.00	0.00	0.00
Uniform Delay (d), s/veh	0.0	6.4	6.4	7.3	6.3	0.0				8.6	0.0	0.0
Incr Delay (d2), s/veh	0.0	0.3	0.4	0.1	0.3	0.0				2.5	0.0	0.0
Initial Q Delay(d3),s/veh	0.0	0.0	0.0	0.0	0.0	0.0				0.0	0.0	0.0
%ile BackOfQ(95%),veh/ln	0.0	1.0	0.9	0.4	1.0	0.0				2.3	0.0	0.0
LnGrp Delay(d),s/veh	0.0	6.7	6.8	7.3	6.6	0.0				11.1	0.0	0.0
LnGrp LOS		A	A	A	A					B		
Approach Vol, veh/h		192			142						180	
Approach Delay, s/veh		6.7			6.8						11.1	
Approach LOS		A			A						B	

Timer	1	2	3	4	5	6	7	8
Assigned Phs		2		4		6		
Phs Duration (G+Y+Rc), s		13.8		11.8		13.8		
Change Period (Y+Rc), s		5.5		5.5		5.5		
Max Green Setting (Gmax), s		37.5		51.5		37.5		
Max Q Clear Time (g_c+I1), s		3.6		5.6		4.5		
Green Ext Time (p_c), s		3.8		0.7		3.8		

Intersection Summary	
HCM 2010 Ctrl Delay	8.3
HCM 2010 LOS	A

Lane Group	EBT	EBR	WBL	WBT	SBT
Lane Configurations					
Traffic Volume (vph)	175	100	50	105	0
Future Volume (vph)	175	100	50	105	0
Turn Type	NA	Perm	Perm	NA	NA
Protected Phases	2			6	4
Permitted Phases		2	6		
Detector Phase	2	2	6	6	4
Switch Phase					
Minimum Initial (s)	5.0	5.0	5.0	5.0	5.0
Minimum Split (s)	23.5	23.5	23.5	23.5	27.5
Total Split (s)	54.0	54.0	54.0	54.0	46.0
Total Split (%)	54.0%	54.0%	54.0%	54.0%	46.0%
Yellow Time (s)	3.5	3.5	3.5	3.5	3.5
All-Red Time (s)	2.0	2.0	2.0	2.0	2.0
Lost Time Adjust (s)	0.0	0.0	0.0	0.0	0.0
Total Lost Time (s)	5.5	5.5	5.5	5.5	5.5
Lead/Lag					
Lead-Lag Optimize?					
Recall Mode	Min	Min	Min	Min	Min

Intersection Summary
Cycle Length: 100
Actuated Cycle Length: 29.9
Natural Cycle: 55
Control Type: Actuated-Uncoordinated

Splits and Phases: 1: I-75 SB Ramps & Bellville Road

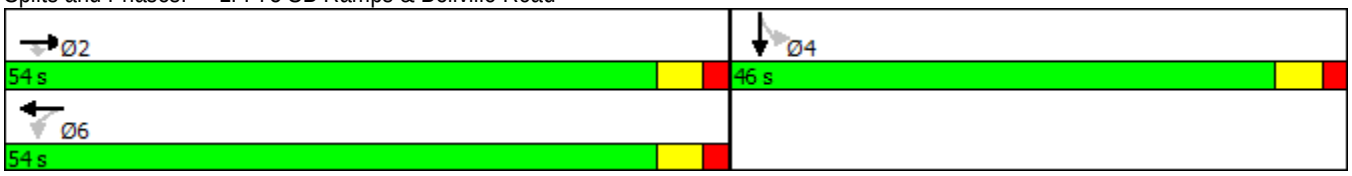

Movement	EBL	EBT	EBR	WBL	WBT	WBR	NBL	NBT	NBR	SBL	SBT	SBR
Lane Configurations												
Traffic Volume (veh/h)	0	175	100	50	105	0	0	0	0	40	0	100
Future Volume (veh/h)	0	175	100	50	105	0	0	0	0	40	0	100
Number	5	2	12	1	6	16				7	4	14
Initial Q (Qb), veh	0	0	0	0	0	0				0	0	0
Ped-Bike Adj(A_pbT)	1.00		1.00	1.00		1.00				1.00		1.00
Parking Bus, Adj	1.00	1.00	1.00	1.00	1.00	1.00				1.00	1.00	1.00
Adj Sat Flow, veh/h/ln	0	1173	1173	1267	1267	0				1900	1218	1900
Adj Flow Rate, veh/h	0	190	109	56	117	0				48	0	120
Adj No. of Lanes	0	1	1	1	1	0				0	1	0
Peak Hour Factor	0.92	0.92	0.92	0.90	0.90	0.90				0.83	0.83	0.83
Percent Heavy Veh, %	0	62	62	50	50	0				0	56	0
Cap, veh/h	0	505	429	459	546	0				69	0	173
Arrive On Green	0.00	0.43	0.43	0.43	0.43	0.00				0.23	0.00	0.23
Sat Flow, veh/h	0	1173	997	732	1267	0				305	0	763
Grp Volume(v), veh/h	0	190	109	56	117	0				168	0	0
Grp Sat Flow(s),veh/h/ln	0	1173	997	732	1267	0				1068	0	0
Q Serve(g_s), s	0.0	3.5	2.2	1.8	1.9	0.0				4.6	0.0	0.0
Cycle Q Clear(g_c), s	0.0	3.5	2.2	5.3	1.9	0.0				4.6	0.0	0.0
Prop In Lane	0.00		1.00	1.00		0.00				0.29		0.71
Lane Grp Cap(c), veh/h	0	505	429	459	546	0				242	0	0
V/C Ratio(X)	0.00	0.38	0.25	0.12	0.21	0.00				0.69	0.00	0.00
Avail Cap(c_a), veh/h	0	1773	1507	1250	1915	0				1349	0	0
HCM Platoon Ratio	1.00	1.00	1.00	1.00	1.00	1.00				1.00	1.00	1.00
Upstream Filter(I)	0.00	1.00	1.00	1.00	1.00	0.00				1.00	0.00	0.00
Uniform Delay (d), s/veh	0.0	6.2	5.8	8.0	5.7	0.0				11.4	0.0	0.0
Incr Delay (d2), s/veh	0.0	0.5	0.3	0.1	0.2	0.0				3.6	0.0	0.0
Initial Q Delay(d3),s/veh	0.0	0.0	0.0	0.0	0.0	0.0				0.0	0.0	0.0
%ile BackOfQ(95%),veh/ln	0.0	2.1	1.2	0.7	1.2	0.0				2.9	0.0	0.0
LnGrp Delay(d),s/veh	0.0	6.7	6.1	8.1	5.9	0.0				15.0	0.0	0.0
LnGrp LOS		A	A	A	A					B		
Approach Vol, veh/h		299			173						168	
Approach Delay, s/veh		6.5			6.6						15.0	
Approach LOS		A			A						B	

Timer	1	2	3	4	5	6	7	8
Assigned Phs		2		4		6		
Phs Duration (G+Y+Rc), s		19.3		12.8		19.3		
Change Period (Y+Rc), s		5.5		5.5		5.5		
Max Green Setting (Gmax), s		48.5		40.5		48.5		
Max Q Clear Time (g_c+I1), s		5.5		6.6		7.3		
Green Ext Time (p_c), s		6.5		0.6		6.5		

Intersection Summary	
HCM 2010 Ctrl Delay	8.7
HCM 2010 LOS	A

Lane Group	EBT	EBR	WBL	WBT	SBT
Lane Configurations					
Traffic Volume (vph)	130	125	55	130	0
Future Volume (vph)	130	125	55	130	0
Turn Type	NA	Perm	Perm	NA	NA
Protected Phases	2			6	4
Permitted Phases		2	6		
Detector Phase	2	2	6	6	4
Switch Phase					
Minimum Initial (s)	5.0	5.0	5.0	5.0	5.0
Minimum Split (s)	23.5	23.5	23.5	23.5	27.5
Total Split (s)	43.0	43.0	43.0	43.0	57.0
Total Split (%)	43.0%	43.0%	43.0%	43.0%	57.0%
Yellow Time (s)	3.5	3.5	3.5	3.5	3.5
All-Red Time (s)	2.0	2.0	2.0	2.0	2.0
Lost Time Adjust (s)	0.0	0.0	0.0	0.0	0.0
Total Lost Time (s)	5.5	5.5	5.5	5.5	5.5
Lead/Lag					
Lead-Lag Optimize?					
Recall Mode	Min	Min	Min	Min	Min

Intersection Summary
Cycle Length: 100
Actuated Cycle Length: 36
Natural Cycle: 55
Control Type: Actuated-Uncoordinated

Splits and Phases: 1: I-75 SB Ramps & Bellville Road

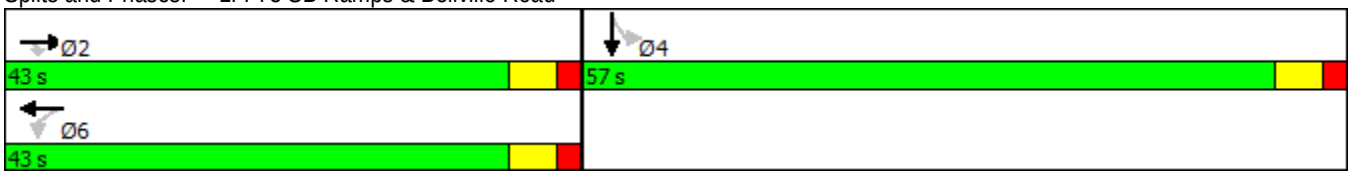

Movement	EBL	EBT	EBR	WBL	WBT	WBR	NBL	NBT	NBR	SBL	SBT	SBR
Lane Configurations												
Traffic Volume (veh/h)	0	130	125	55	130	0	0	0	0	100	0	130
Future Volume (veh/h)	0	130	125	55	130	0	0	0	0	100	0	130
Number	5	2	12	1	6	16				7	4	14
Initial Q (Qb), veh	0	0	0	0	0	0				0	0	0
Ped-Bike Adj(A_pbT)	1.00		1.00	1.00		1.00				1.00		1.00
Parking Bus, Adj	1.00	1.00	1.00	1.00	1.00	1.00				1.00	1.00	1.00
Adj Sat Flow, veh/h/ln	0	1267	1267	1301	1301	0				1900	1275	1900
Adj Flow Rate, veh/h	0	160	154	68	160	0				128	0	167
Adj No. of Lanes	0	1	1	1	1	0				0	1	0
Peak Hour Factor	0.81	0.81	0.81	0.81	0.81	0.81				0.78	0.78	0.78
Percent Heavy Veh, %	0	50	50	46	46	0				0	49	0
Cap, veh/h	0	486	413	411	499	0				159	0	207
Arrive On Green	0.00	0.38	0.38	0.38	0.38	0.00				0.32	0.00	0.32
Sat Flow, veh/h	0	1267	1077	741	1301	0				493	0	644
Grp Volume(v), veh/h	0	160	154	68	160	0				295	0	0
Grp Sat Flow(s),veh/h/ln	0	1267	1077	741	1301	0				1137	0	0
Q Serve(g_s), s	0.0	3.3	3.8	2.7	3.2	0.0				8.9	0.0	0.0
Cycle Q Clear(g_c), s	0.0	3.3	3.8	6.0	3.2	0.0				8.9	0.0	0.0
Prop In Lane	0.00		1.00	1.00		0.00				0.43		0.57
Lane Grp Cap(c), veh/h	0	486	413	411	499	0				366	0	0
V/C Ratio(X)	0.00	0.33	0.37	0.17	0.32	0.00				0.81	0.00	0.00
Avail Cap(c_a), veh/h	0	1270	1080	870	1305	0				1565	0	0
HCM Platoon Ratio	1.00	1.00	1.00	1.00	1.00	1.00				1.00	1.00	1.00
Upstream Filter(I)	0.00	1.00	1.00	1.00	1.00	0.00				1.00	0.00	0.00
Uniform Delay (d), s/veh	0.0	8.1	8.3	10.2	8.1	0.0				11.6	0.0	0.0
Incr Delay (d2), s/veh	0.0	0.4	0.6	0.2	0.4	0.0				4.2	0.0	0.0
Initial Q Delay(d3),s/veh	0.0	0.0	0.0	0.0	0.0	0.0				0.0	0.0	0.0
%ile BackOfQ(95%),veh/ln	0.0	2.2	2.1	1.0	2.2	0.0				5.6	0.0	0.0
LnGrp Delay(d),s/veh	0.0	8.5	8.9	10.4	8.5	0.0				15.8	0.0	0.0
LnGrp LOS		A	A	B	A					B		
Approach Vol, veh/h		314			228						295	
Approach Delay, s/veh		8.7			9.1						15.8	
Approach LOS		A			A						B	

Timer	1	2	3	4	5	6	7	8
Assigned Phs		2		4		6		
Phs Duration (G+Y+Rc), s		19.8		17.6		19.8		
Change Period (Y+Rc), s		5.5		5.5		5.5		
Max Green Setting (Gmax), s		37.5		51.5		37.5		
Max Q Clear Time (g_c+I1), s		5.8		10.9		8.0		
Green Ext Time (p_c), s		6.5		1.2		6.3		

Intersection Summary	
HCM 2010 Ctrl Delay	11.3
HCM 2010 LOS	B

Appendix J. Left Turn Analysis AM and PM

Future Traffic Count Summary Sheet

Peak Hour Count (AM)

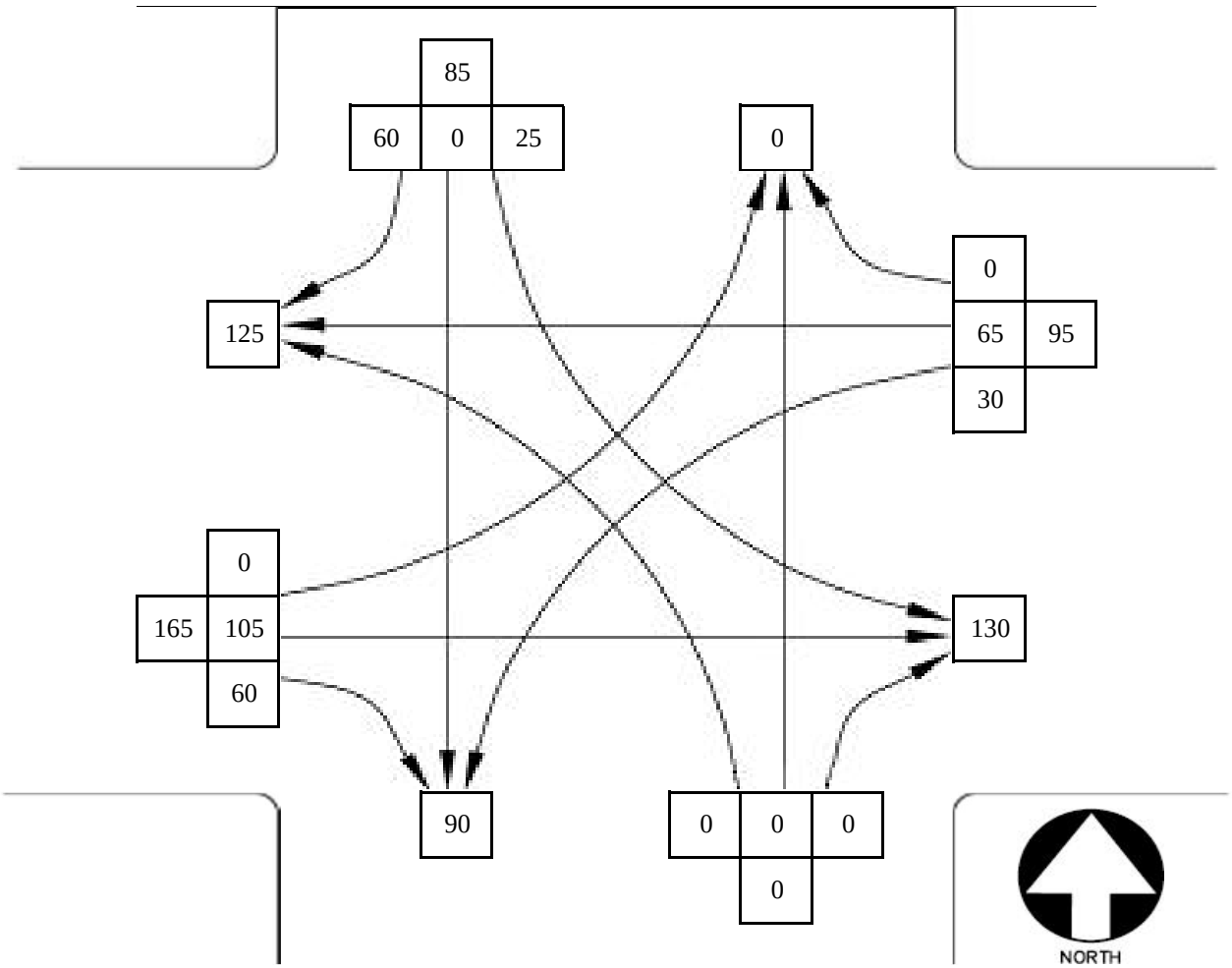

Conflicting Movements	Through Volume (V_o)	Left Turn Volume (V_{lt})	Opposing Lanes (N_o)	Cross-Product ($V_o \times V_{lt} \div N_o$)	Cross-Product Warrant?	Peak Volume Warrant?	Turn Phase Recommended?
~~NBL & SBT~~	~~0~~	~~0~~	~~1~~	~~0~~	~~NO~~	~~NO~~	~~NO~~
~~SBL & NBT~~	~~0~~	~~25~~	~~1~~	~~0~~	~~NO~~	~~NO~~	~~NO~~
~~EBL & WBT~~	~~65~~	~~0~~	~~1~~	~~0~~	~~NO~~	~~NO~~	~~NO~~
WBL & EBT	105	30	1	3,150	NO	NO	NO

LEFT TURN CRITERIA - AM PEAK HOUR

JACOBS ®

Future Traffic Count Summary Sheet

Peak Hour Count (PM)

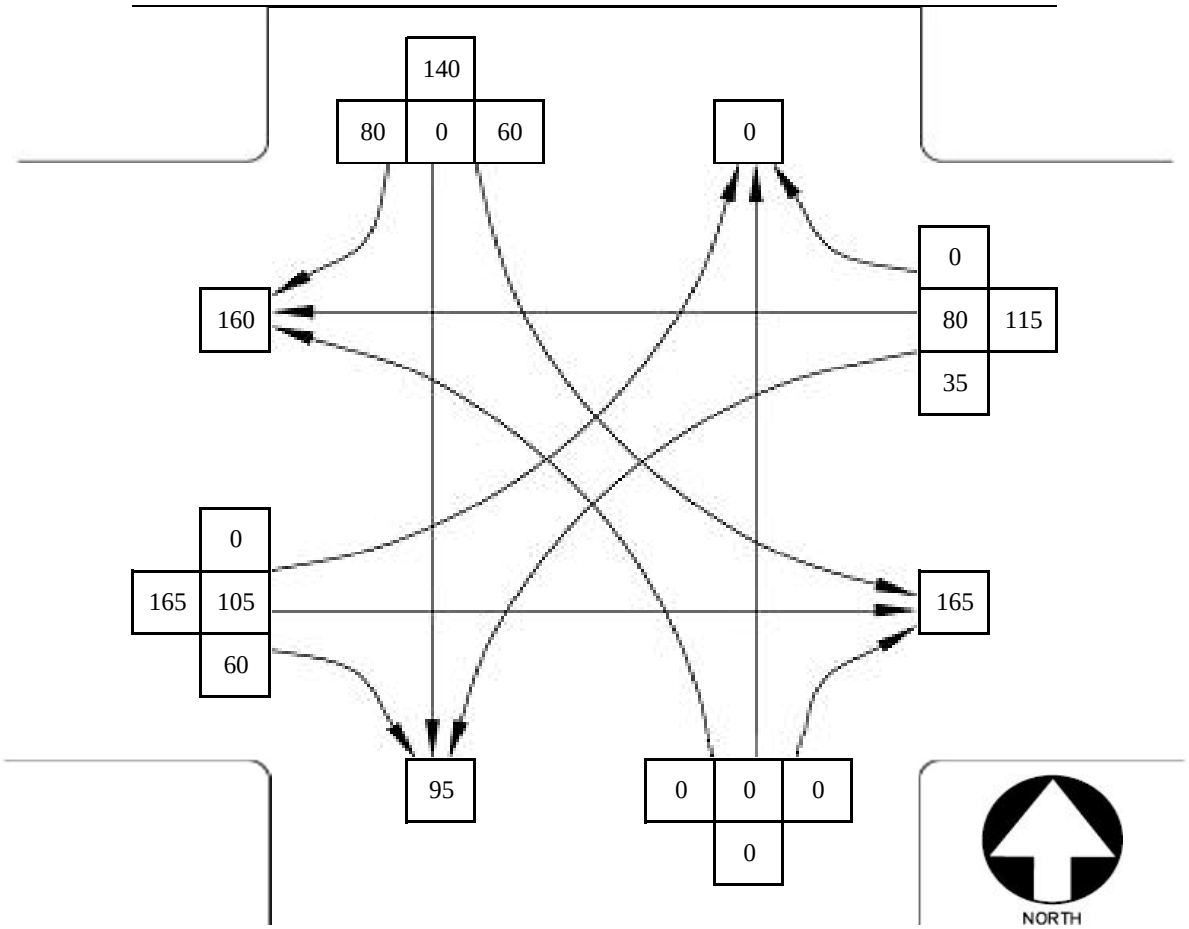

Conflicting Movements	Through Volume (V_o)	Left Turn Volume (V_{lt})	Opposing Lanes (N_o)	Cross-Product ($V_o \times V_{lt} \div N_o$)	Cross-Product Warrant?	Peak Volume Warrant?	Turn Phase Recommended?
~~NBL & SBT~~	~~0~~	~~0~~	~~1~~	~~0~~	~~NO~~	~~NO~~	~~NO~~
~~SBL & NBT~~	~~0~~	~~60~~	~~1~~	~~0~~	~~NO~~	~~NO~~	~~NO~~
~~EBL & WBT~~	~~80~~	~~0~~	~~1~~	~~0~~	~~NO~~	~~NO~~	~~NO~~
WBL & EBT	105	35	1	3,675	NO	NO	NO

LEFT TURN CRITERIA - PM PEAK HOUR

JACOBS ®

Future Traffic Count Summary Sheet

Peak Hour Count (AM)

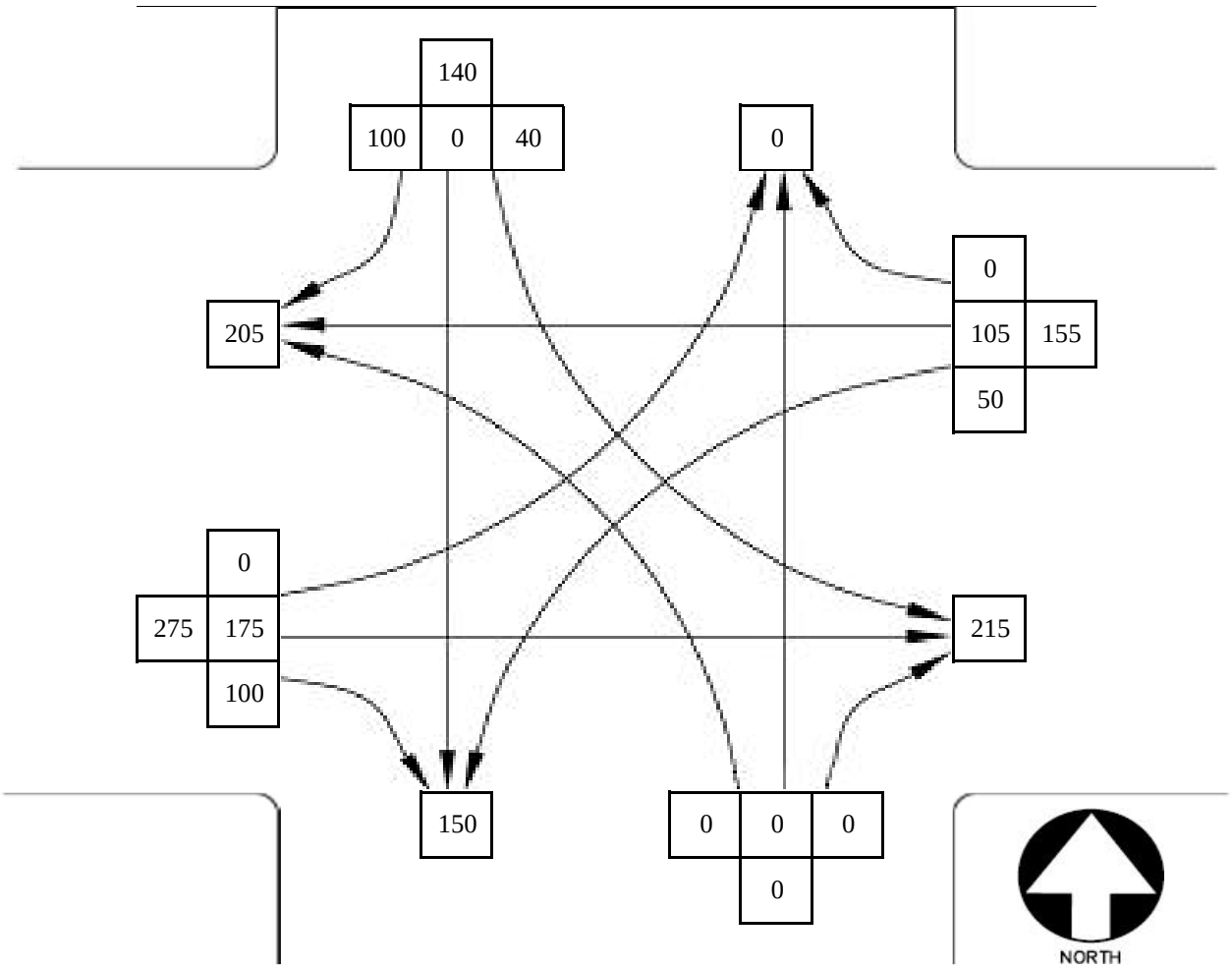

Conflicting Movements	Through Volume (V_o)	Left Turn Volume (V_{lt})	Opposing Lanes (N_o)	Cross-Product ($V_o \times V_{lt} \div N_o$)	Cross-Product Warrant?	Peak Volume Warrant?	Turn Phase Recommended?
~~NBL & SBT~~	~~0~~	~~0~~	~~1~~	~~0~~	~~NO~~	~~NO~~	~~NO~~
~~SBL & NBT~~	~~0~~	~~40~~	~~1~~	~~0~~	~~NO~~	~~NO~~	~~NO~~
~~EBL & WBT~~	~~105~~	~~0~~	~~1~~	~~0~~	~~NO~~	~~NO~~	~~NO~~
WBL & EBT	175	50	1	8,750	NO	NO	NO

LEFT TURN CRITERIA - AM PEAK HOUR

JACOBS ®

Future Traffic Count Summary Sheet

Peak Hour Count (PM)

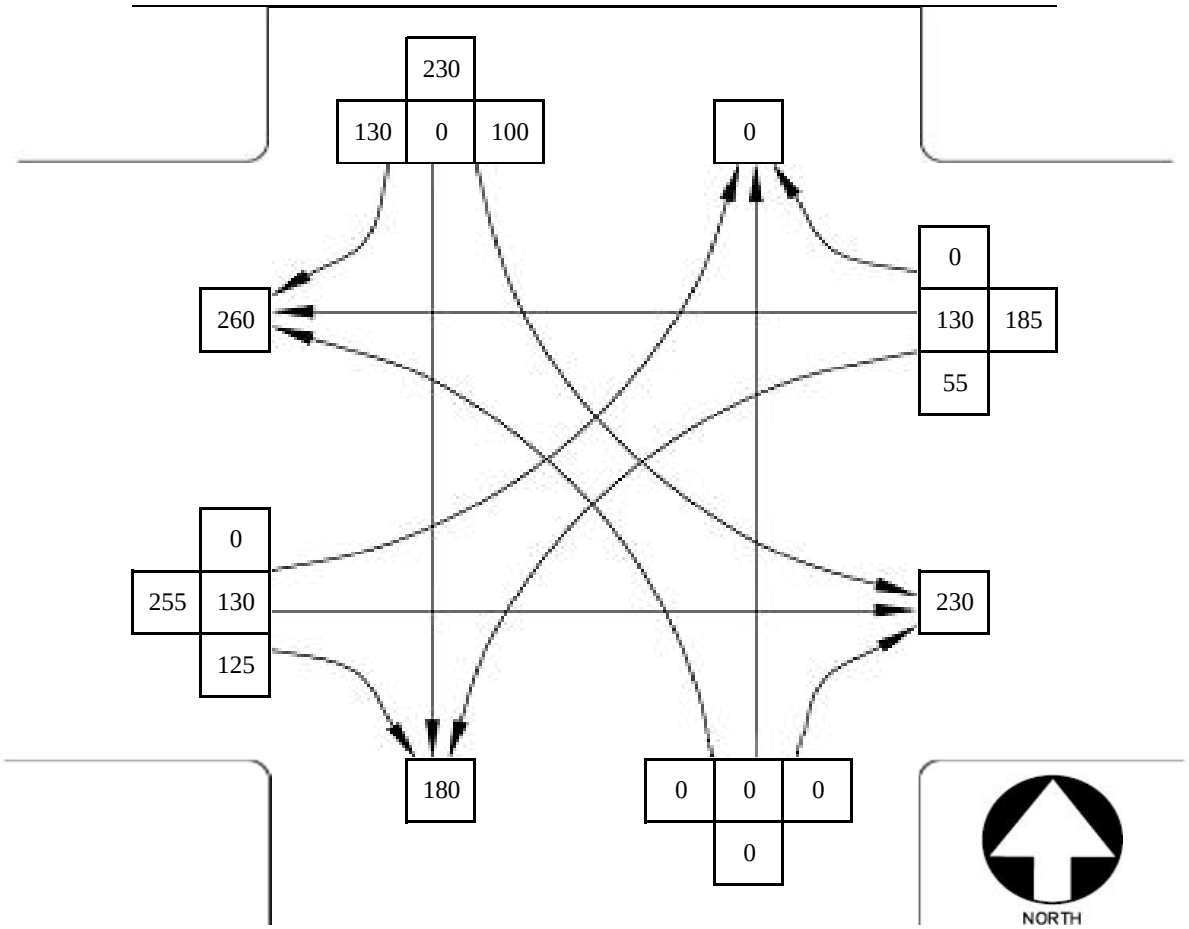

Conflicting Movements	Through Volume (V_o)	Left Turn Volume (V_{lt})	Opposing Lanes (N_o)	Cross-Product ($V_o \times V_{lt} \div N_o$)	Cross-Product Warrant?	Peak Volume Warrant?	Turn Phase Recommended?
~~NBL & SBT~~	~~0~~	~~0~~	~~1~~	~~0~~	~~NO~~	~~NO~~	~~NO~~
~~SBL & NBT~~	~~0~~	~~100~~	~~1~~	~~0~~	~~NO~~	~~FYA lag only~~	~~FYA lag only~~
~~EBL & WBT~~	~~130~~	~~0~~	~~1~~	~~0~~	~~NO~~	~~NO~~	~~NO~~
WBL & EBT	130	55	1	7,150	NO	NO	NO

LEFT TURN CRITERIA - PM PEAK HOUR

JACOBS ®

Appendix K. Roundabout Analysis

General & Site Information

v3.0

Analyst:	GKW
Agency/Co:	Jacobs Engineering
Date:	11/15/2016
Project or PI#:	0007386
Year, Peak Hour:	2022 AM
County/District:	Lowndes County
Intersection Name:	CR 174 (Bellville Road) at I-75 Southbound Ramps

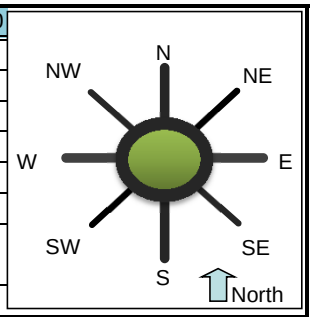

Volumes		Entry Legs (FROM) N (1)	NE (2)	E (3)	SE (4)	S (5)	SW (6)	W (7)	NW (8)
Exit Legs (TO)	N (1), vph								
	NE (2), vph								
	E (3), vph	28						105	
	SE (4), vph								
	S (5), vph			30				60	
	SW (6), vph								
	W (7), vph	60		65					
	NW (8), vph								
Output	Total Vehicles	88	0	95	0	0	0	165	0

Volume Characteristics	N	NE	E	SE	S	SW	W	NW
% Cars	43.5%	100.0%	50.0%	100.0%	100.0%	100.0%	38.0%	100.0%
% Heavy Vehicles	56.5%	0.0%	50.0%	0.0%	0.0%	0.0%	62.0%	0.0%
% Bicycle	0.0%	0.0%	0.0%	0.0%	0.0%	0.0%	0.0%	0.0%
# of Pedestrians (ped/hr)	0	0	0	0	0	0	0	0
PHF	*0.83*	*0.95*	*0.90*	*0.95*	*0.95*	*0.95*	*0.92*	*0.95*
F_{HV}	0.639	1.000	0.667	1.000	1.000	1.000	0.617	1.000
F_{ped}	1.000	1.000	1.000	1.000	1.000	1.000	1.000	1.000

Entry/Conflicting Flows	N	NE	E	SE	S	SW	W	NW
Flow to Leg # N (1), pcu/h	0	0	0	0	0	0	0	0
NE (2), pcu/h	0	0	0	0	0	0	0	0
E (3), pcu/h	53	0	0	0	0	0	185	0
SE (4), pcu/h	0	0	0	0	0	0	0	0
S (5), pcu/h	0	0	50	0	0	0	106	0
SW (6), pcu/h	0	0	0	0	0	0	0	0
W (7), pcu/h	113	0	109	0	0	0	0	0
NW (8), pcu/h	0	0	0	0	0	0	0	0
Entry flow, pcu/h	166	0	159	0	0	0	291	0
Conflicting flow, pcu/h	159	0	0	0	0	0	103	0

Results: Approach Measures of Effectiveness

HCM 6th Edition	N	NE	E	SE	S	SW	W	NW
Entry Capacity, vph	750	NA	920	NA	NA	NA	767	NA
Entry Flow Rates, vph	106	NA	106	NA	NA	NA	180	NA
V/C ratio	0.14		0.11				0.23	
Control Delay, sec/pcu	6		5				7	
LOS	A		A				A	
95th % Queue (ft)	19		15				37	

Notes:

v3.0

Unit Legend:
vph = vehicles per hour
PHF = peak hour factor
F_{HV} = heavy vehicle factor
pcu = passenger car unit

Bypass Lane Merge Point Analysis (if applicable)

General & Site Information

v3.0

Analyst:	GKW
Agency/Co:	Jacobs Engineering
Date:	11/15/2016
Project or PI#:	0007386
Year, Peak Hour:	2022 PM
County/District:	Lowndes County
Intersection Name:	CR 174 (Bellville Road) at I-75 Southbound Ramps

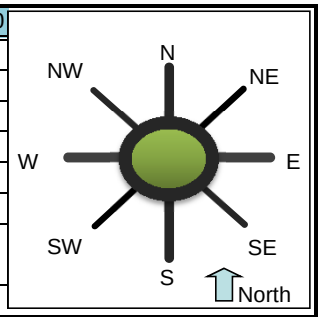

Volumes		Entry Legs (FROM) N (1)	NE (2)	E (3)	SE (4)	S (5)	SW (6)	W (7)	NW (8)
Exit Legs (TO)	N (1), vph								
	NE (2), vph								
	E (3), vph	60						80	
	SE (4), vph								
	S (5), vph			80				75	
	SW (6), vph								
	W (7), vph	80		35					
	NW (8), vph								
Output	Total Vehicles	140	0	115	0	0	0	155	0

Volume Characteristics	N	NE	E	SE	S	SW	W	NW
% Cars	51.0%	100.0%	54.0%	100.0%	100.0%	100.0%	49.5%	100.0%
% Heavy Vehicles	49.0%	0.0%	46.0%	0.0%	0.0%	0.0%	50.5%	0.0%
% Bicycle	0.0%	0.0%	0.0%	0.0%	0.0%	0.0%	0.0%	0.0%
# of Pedestrians (ped/hr)	0	0	0	0	0	0	0	0
PHF	*0.78*	*0.95*	*0.82*	*0.95*	*0.95*	*0.95*	*0.82*	*0.95*
F_{HV}	0.671	1.000	0.685	1.000	1.000	1.000	0.664	1.000
F_{ped}	1.000	1.000	1.000	1.000	1.000	1.000	1.000	1.000

Entry/Conflicting Flows	N	NE	E	SE	S	SW	W	NW
Flow to Leg # N (1), pcu/h	0	0	0	0	0	0	0	0
NE (2), pcu/h	0	0	0	0	0	0	0	0
E (3), pcu/h	114	0	0	0	0	0	148	0
SE (4), pcu/h	0	0	0	0	0	0	0	0
S (5), pcu/h	0	0	143	0	0	0	138	0
SW (6), pcu/h	0	0	0	0	0	0	0	0
W (7), pcu/h	152	0	63	0	0	0	0	0
NW (8), pcu/h	0	0	0	0	0	0	0	0
Entry flow, pcu/h	267	0	206	0	0	0	286	0
Conflicting flow, pcu/h	206	0	0	0	0	0	258	0

Results: Approach Measures of Effectiveness

HCM 6th Edition	N	NE	E	SE	S	SW	W	NW
Entry Capacity, vph	751	NA	945	NA	NA	NA	705	NA
Entry Flow Rates, vph	179	NA	141	NA	NA	NA	190	NA
V/C ratio	0.24		0.15				0.27	
Control Delay, sec/pcu	7		5				8	
LOS	A		A				A	
95th % Queue (ft)	35		19				41	

Notes:

v3.0

Unit Legend:
vph = vehicles per hour
PHF = peak hour factor
F_{HV} = heavy vehicle factor
pcu = passenger car unit

Bypass Lane Merge Point Analysis (if applicable)

General & Site Information

v3.0

Analyst:	GKW
Agency/Co:	Jacobs Engineering
Date:	11/15/2016
Project or PI#:	0007386
Year, Peak Hour:	2042 AM
County/District:	Lowndes County
Intersection Name:	CR 174 (Bellville Road) at I-75 Southbound Ramps

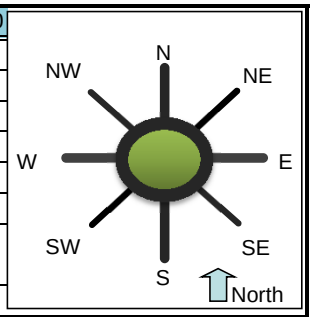

Volumes		Entry Legs (FROM) N (1)	NE (2)	E (3)	SE (4)	S (5)	SW (6)	W (7)	NW (8)
Exit Legs (TO)	N (1), vph								
	NE (2), vph								
	E (3), vph	40						175	
	SE (4), vph								
	S (5), vph			50				100	
	SW (6), vph								
	W (7), vph	100		105					
	NW (8), vph								
Output	Total Vehicles	140	0	155	0	0	0	275	0

Volume Characteristics	N	NE	E	SE	S	SW	W	NW
% Cars	43.5%	100.0%	50.0%	100.0%	100.0%	100.0%	38.0%	100.0%
% Heavy Vehicles	56.5%	0.0%	50.0%	0.0%	0.0%	0.0%	62.0%	0.0%
% Bicycle	0.0%	0.0%	0.0%	0.0%	0.0%	0.0%	0.0%	0.0%
# of Pedestrians (ped/hr)	0	0	0	0	0	0	0	0
PHF	*0.83*	*0.95*	*0.90*	*0.95*	*0.95*	*0.95*	*0.92*	*0.95*
F_{HV}	0.639	1.000	0.667	1.000	1.000	1.000	0.617	1.000
F_{ped}	1.000	1.000	1.000	1.000	1.000	1.000	1.000	1.000

Entry/Conflicting Flows	N	NE	E	SE	S	SW	W	NW
Flow to Leg # N (1), pcu/h	0	0	0	0	0	0	0	0
NE (2), pcu/h	0	0	0	0	0	0	0	0
E (3), pcu/h	75	0	0	0	0	0	308	0
SE (4), pcu/h	0	0	0	0	0	0	0	0
S (5), pcu/h	0	0	84	0	0	0	176	0
SW (6), pcu/h	0	0	0	0	0	0	0	0
W (7), pcu/h	189	0	175	0	0	0	0	0
NW (8), pcu/h	0	0	0	0	0	0	0	0
Entry flow, pcu/h	264	0	259	0	0	0	485	0
Conflicting flow, pcu/h	259	0	0	0	0	0	159	0

Results: Approach Measures of Effectiveness

HCM 6th Edition	N	NE	E	SE	S	SW	W	NW
Entry Capacity, vph	677	NA	920	NA	NA	NA	724	NA
Entry Flow Rates, vph	169	NA	173	NA	NA	NA	299	NA
V/C ratio	0.25		0.19				0.41	
Control Delay, sec/pcu	8		6				10	
LOS	A		A				B	
95th % Queue (ft)	38		26				82	

Notes:

v3.0

Unit Legend:
vph = vehicles per hour
PHF = peak hour factor
F_{HV} = heavy vehicle factor
pcu = passenger car unit

Bypass Lane Merge Point Analysis (if applicable)

General & Site Information

v3.0

Analyst:	GKW
Agency/Co:	Jacobs Engineering
Date:	11/15/2016
Project or PI#:	0007386
Year, Peak Hour:	2042 PM
County/District:	Lowndes County
Intersection Name:	CR 174 (Bellville Road) at I-75 Southbound Ramps

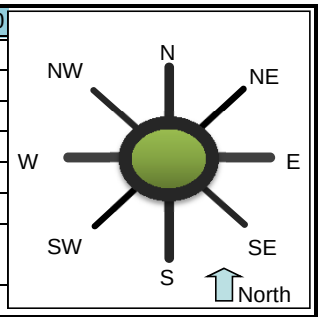

Volumes		Entry Legs (FROM) N (1)	NE (2)	E (3)	SE (4)	S (5)	SW (6)	W (7)	NW (8)
Exit Legs (TO)	N (1), vph								
	NE (2), vph								
	E (3), vph	100						130	
	SE (4), vph								
	S (5), vph			55				125	
	SW (6), vph								
	W (7), vph	130		130					
	NW (8), vph								
Output	Total Vehicles	230	0	185	0	0	0	255	0

Volume Characteristics	N	NE	E	SE	S	SW	W	NW
% Cars	51.0%	100.0%	54.0%	100.0%	100.0%	100.0%	49.5%	100.0%
% Heavy Vehicles	49.0%	0.0%	46.0%	0.0%	0.0%	0.0%	50.5%	0.0%
% Bicycle	0.0%	0.0%	0.0%	0.0%	0.0%	0.0%	0.0%	0.0%
# of Pedestrians (ped/hr)	0	0	0	0	0	0	0	0
PHF	*0.78*	*0.95*	*0.82*	*0.95*	*0.95*	*0.95*	*0.82*	*0.95*
F_{HV}	0.671	1.000	0.685	1.000	1.000	1.000	0.664	1.000
F_{ped}	1.000	1.000	1.000	1.000	1.000	1.000	1.000	1.000

Entry/Conflicting Flows	N	NE	E	SE	S	SW	W	NW
Flow to Leg # N (1), pcu/h	0	0	0	0	0	0	0	0
NE (2), pcu/h	0	0	0	0	0	0	0	0
E (3), pcu/h	191	0	0	0	0	0	240	0
SE (4), pcu/h	0	0	0	0	0	0	0	0
S (5), pcu/h	0	0	99	0	0	0	231	0
SW (6), pcu/h	0	0	0	0	0	0	0	0
W (7), pcu/h	248	0	233	0	0	0	0	0
NW (8), pcu/h	0	0	0	0	0	0	0	0
Entry flow, pcu/h	438	0	331	0	0	0	471	0
Conflicting flow, pcu/h	331	0	0	0	0	0	289	0

Results: Approach Measures of Effectiveness

HCM 6th Edition	N	NE	E	SE	S	SW	W	NW
Entry Capacity, vph	661	NA	945	NA	NA	NA	683	NA
Entry Flow Rates, vph	294	NA	227	NA	NA	NA	313	NA
V/C ratio	0.45		0.24				0.46	
Control Delay, sec/pcu	12		6				12	
LOS	B		A				B	
95th % Queue (ft)	85		34				91	

Notes:

v3.0

Unit Legend:
vph = vehicles per hour
PHF = peak hour factor
F_{HV} = heavy vehicle factor
pcu = passenger car unit

Bypass Lane Merge Point Analysis (if applicable)

Memorandum

Ten 10th Street, NW, Suite 1400
Atlanta, Georgia 30309
United States

Subject	**Bellville Road**	**Project Name**	I-75 Interchanges in Lowndes County
Date	May 17, 2017	**Project No.**	CB-506050

The purpose of this memorandum is to document the results of a preliminary analysis for the Bellville Road interchange at I-75. The focus of the analysis is whether the ramp intersections would operate at an acceptable level-of-service if configured as roundabouts.

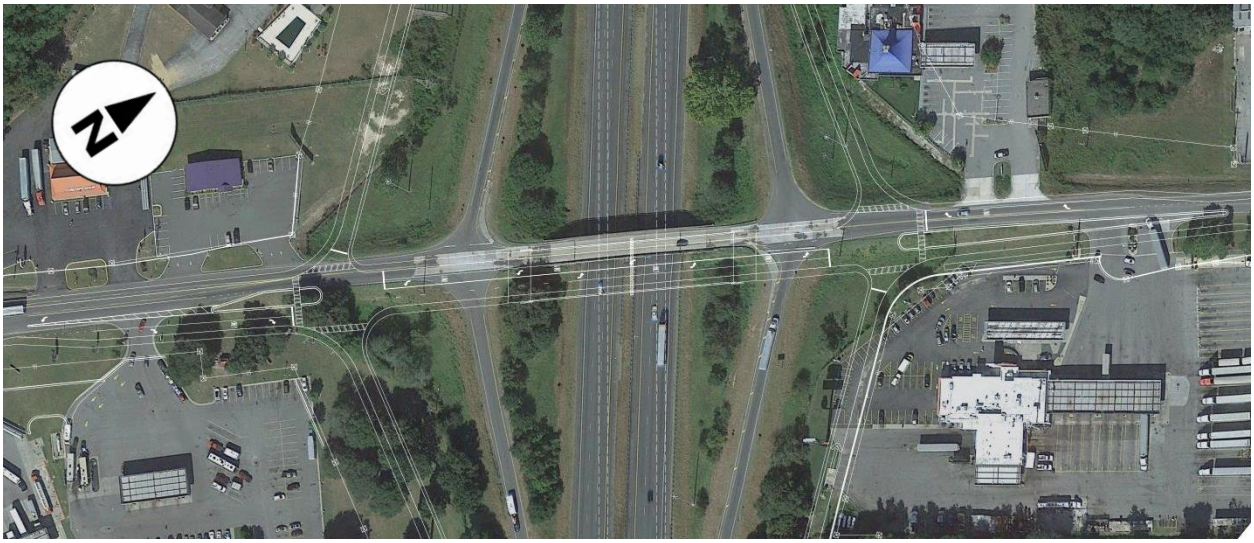

Figure 1 : Bellville Road Interchange

The result of this preliminary analysis, as provided on the following page, concludes that a single lane roundabout configuration will have a comparable level-of-service and average delay to those at a signalized intersection. The approaches to each roundabout will operate at a level-of-service "A" or "B".

If determined to be a viable alternative, further considerations would need to be explored in the selection of a roundabout configuration at the interchange. A roundabout feasibility study would further explore the operational and geometric characteristics of the roundabouts with respect to truck movements, weaving, safety, impacts, etc.

BUILD 2022 Analysis

Table 1 : 2022 Build Unsignalized & Signalized

Bellville Road at the I-75 Ramps		Build (Unsignalized)				Build (Signalized)			
		AM Peak		PM Peak		AM Peak		PM Peak	
		LOS	Delay	LOS	Delay	LOS	Delay	LOS	Delay
I-75 SB	OVERALL	-	-	-	-	A	7.1	A	8.3
	Southbound Approach (I-75 SB)	B	10.4	B	11.7	A	9.8	B	11.1
	Westbound Left (Bellville Road)	A	8.0	A	8.0	A	6.8	A	7.3
I-75 NB	OVERALL	-	-	-	-	A	6.7	A	7.9
	Northbound Approach (I-75 NB Ramp)	B	10.9	B	11.3	A	9.2	B	10.3
	Eastbound Left (Bellville Road)	A	8.2	A	8.0	A	6.7	A	7.0

Table 2 : 2022 Build Single-Lane Roundabout

Bellville Road at the I-75 Ramps		Build (GDOT Roundabout)				Build (SIDRA Roundabout)			
		AM Peak		PM Peak		AM Peak		PM Peak	
		LOS	Delay	LOS	Delay	LOS	Delay	LOS	Delay
I-75 SB	Southbound Approach (I-75 SB)	A	6.0	A	8.0	A	6.8	A	8.2
	Westbound Approach (Bellville Road)	A	5.0	A	5.0	A	5.1	A	5.3
	Eastbound Approach (Bellville Road)	A	7.0	A	7.0	A	7.8	A	8.3
I-75 NB	Northbound Approach (I-75 NB)	A	6.0	A	7.0	A	6.0	A	7.7
	Westbound Approach (Bellville Road)	A	7.0	A	6.0	A	7.6	A	7.1
	Eastbound Approach (Bellville Road)	A	6.0	A	5.0	A	6.3	A	5.5

*Analysis based on GDOT Roundabout Analysis Tool v4.0

Table 3 : 2022 Build 95th Percentile Queuing (feet)

Bellville Road at the I-75 Ramps		STOP		SIGNAL		GDOT Rndbt		SIDRA Rndbt	
		AM	PM	AM	PM	AM	PM	AM	PM
I-75 SB	Southbound Approach (I-75 SB)	13	25	30	58	18	35	26	47
	Westbound Approach (Bellville Road)	3	3	15	25	15	19	-	-
	Eastbound Approach (Bellville Road)	-	-	25	25	36	37	50	53
I-75 NB	Northbound Approach (I-75 NB)	10	20	25	50	13	30	18	40
	Westbound Approach (Bellville Road)	-	-	15	15	26	23	38	33
	Eastbound Approach (Bellville Road)	5	5	23	20	28	21	-	-

BUILD 2042 Analysis

Table 4 : 2042 Build Unsignalized & Signalized

Bellville Road at the I-75 Ramps		Build (Unsignalized)				Build (Signalized)			
		AM Peak		PM Peak		AM Peak		PM Peak	
		LOS	Delay	LOS	Delay	LOS	Delay	LOS	Delay
I-75 SB	OVERALL	-	-	-	-	A	8.7	B	11.3
	Southbound Approach (I-75 SB)	B	12.1	C	16.8	B	15.0	B	15.8
	Westbound Left (Bellville Road)	A	8.3	A	8.2	A	8.1	B	10.4
I-75 NB	OVERALL	-	-	-	-	A	7.7	B	10.3
	Northbound Approach (I-75 NB Ramp)	B	14.0	C	15.3	B	14.5	B	14.3
	Eastbound Left (Bellville Road)	A	8.5	A	8.2	A	7.1	A	9.2

Table 5 : 2042 Build Single-Lane Roundabout

Bellville Road at the I-75 Ramps		Build (GDOT Roundabout)				Build (SIDRA Roundabout)			
		AM Peak		PM Peak		AM Peak		PM Peak	
		LOS	Delay	LOS	Delay	LOS	Delay	LOS	Delay
I-75 SB	Southbound Approach (I-75 SB)	A	8.0	B	12.0	A	9.3	B	13.7
	Westbound Approach (Bellville Road)	A	6.0	A	6.0	A	5.8	A	6.3
	Eastbound Approach (Bellville Road)	B	10.0	B	12.0	B	12.1	B	14.5
I-75 NB	Northbound Approach (I-75 NB)	A	8.0	B	11.0	A	8.3	B	12.4
	Westbound Approach (Bellville Road)	B	10.0	A	9.0	B	11.7	B	10.6
	Eastbound Approach (Bellville Road)	A	8.0	A	7.0	A	7.8	A	6.7

*Analysis based on GDOT Roundabout Analysis Tool v4.0

Table 6 : 2042 Build 95th Percentile Queuing (feet)

Bellville Road at the I-75 Ramps		STOP		SIGNAL		GDOT Rndbt		SIDRA Rndbt	
		AM	PM	AM	PM	AM	PM	AM	PM
I-75 SB	Southbound Approach (I-75 SB)	25	68	73	140	38	86	51	111
	Westbound Approach (Bellville Road)	5	5	30	55	26	35	-	-
	Eastbound Approach (Bellville Road)	-	-	53	55	82	91	113	132
I-75 NB	Northbound Approach (I-75 NB)	25	55	58	115	28	73	36	88
	Westbound Approach (Bellville Road)	-	-	30	33	60	50	78	69
	Eastbound Approach (Bellville Road)	10	8	40	40	54	39	-	-

SITE LAYOUT

Site: Bellville Road at SB Ramps (2022 AM)

Bellville Road at SB Ramps
Roundabout

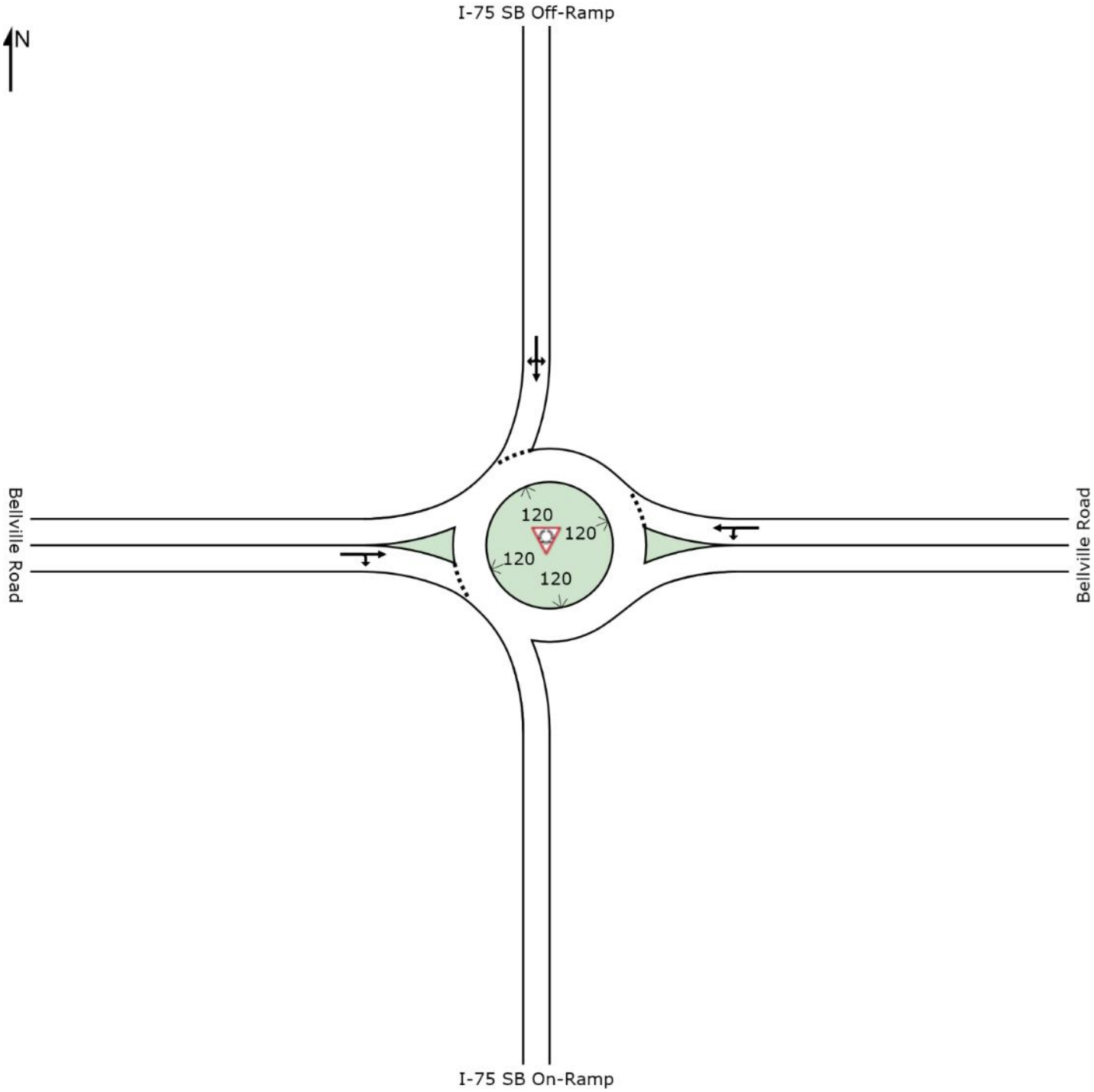

Copyright © 2000-2014 Akcelik and Associates Pty Ltd
www.sidrasolutions.com

SITE LAYOUT

Site: Bellville Road at NB Ramps (2022 AM)

Bellville Road at NB Ramps
Roundabout

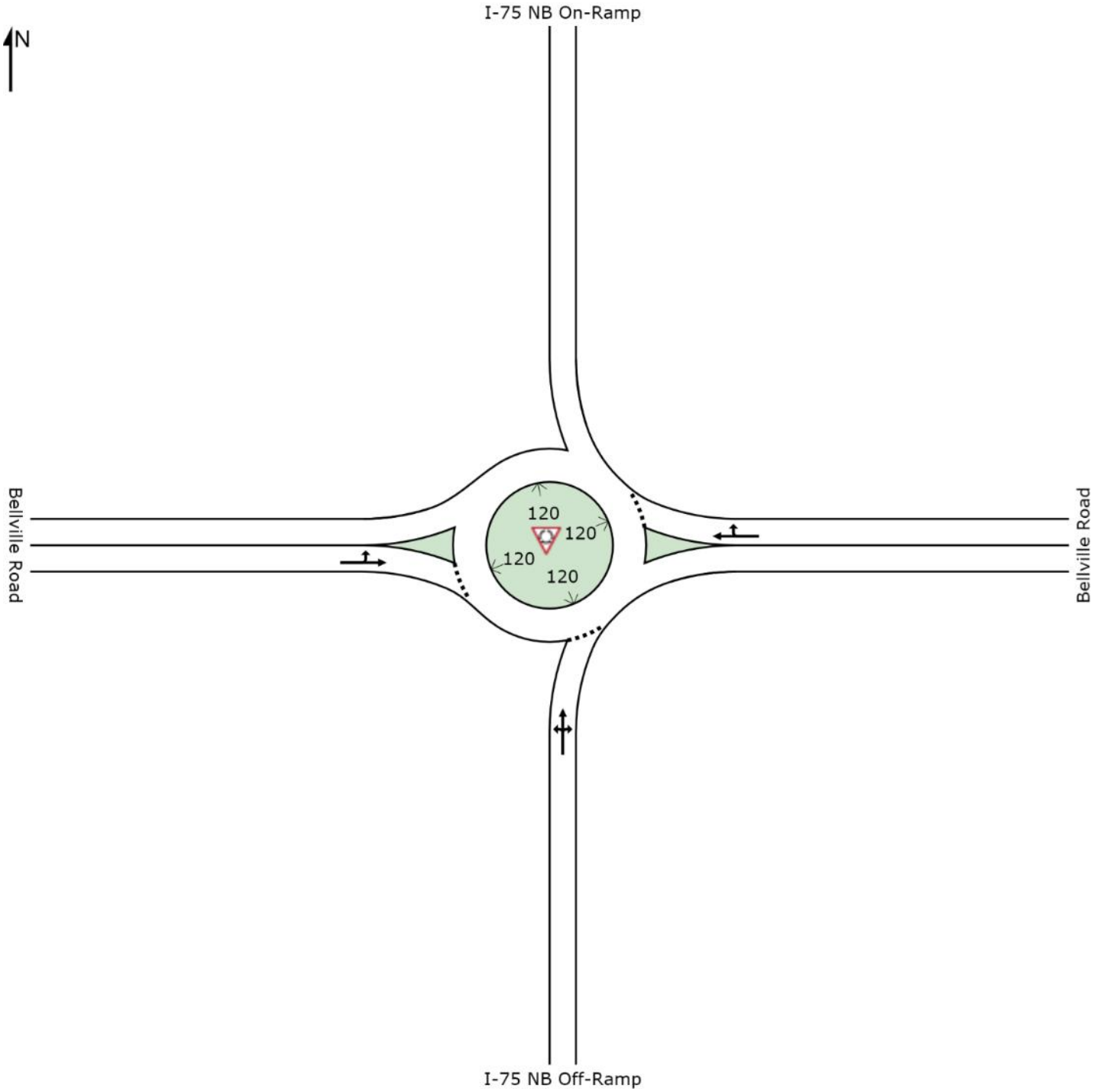

Copyright © 2000-2014 Akcelik and Associates Pty Ltd
www.sidrasolutions.com

APPENDIX A – Approved Traffic Flow Diagrams

SUBMITTED SEPARATELY

APPENDIX B – Build 2022: Unsignalized Analysis

Intersection	
Int Delay, s/veh	3.4

Movement	EBL	EBT	EBR	WBL	WBT	WBR	NBL	NBT	NBR	SBL	SBT	SBR
Lane Configurations												
Traffic Vol, veh/h	0	105	60	30	65	0	0	0	0	25	0	60
Future Vol, veh/h	0	105	60	30	65	0	0	0	0	25	0	60
Conflicting Peds, #/hr	0	0	0	0	0	0	0	0	0	0	0	0
Sign Control	Free	Free	Free	Free	Free	Free	Stop	Stop	Stop	Stop	Stop	Stop
RT Channelized	-	-	None	-	-	None	-	-	None	-	-	None
Storage Length	-	-	250	0	-	-	-	-	-	-	-	-
Veh in Median Storage, #	-	0	-	-	0	-	-	-	-	-	0	-
Grade, %	-	0	-	-	0	-	-	0	-	-	0	-
Peak Hour Factor	92	92	92	90	90	90	92	92	92	83	83	83
Heavy Vehicles, %	62	62	62	50	50	50	2	2	2	56	56	56
Mvmt Flow	0	114	65	33	72	0	0	0	0	30	0	72

Major/Minor	Major1			Major2			Minor2		
Conflicting Flow All	-	0	0	114	0	0	253	253	72
Stage 1	-	-	-	-	-	-	139	139	-
Stage 2	-	-	-	-	-	-	114	114	-
Critical Hdwy	-	-	-	4.6	-	-	6.96	7.06	6.76
Critical Hdwy Stg 1	-	-	-	-	-	-	5.96	6.06	-
Critical Hdwy Stg 2	-	-	-	-	-	-	5.96	6.06	-
Follow-up Hdwy	-	-	-	2.65	-	-	4.004	4.504	3.804
Pot Cap-1 Maneuver	0	-	-	1224	-	0	632	568	859
Stage 1	0	-	-	-	-	0	771	689	-
Stage 2	0	-	-	-	-	0	793	708	-
Platoon blocked, %		-	-		-				
Mov Cap-1 Maneuver	-	-	-	1224	-	-	615	0	859
Mov Cap-2 Maneuver	-	-	-	-	-	-	615	0	-
Stage 1	-	-	-	-	-	-	750	0	-
Stage 2	-	-	-	-	-	-	793	0	-

Approach	EB	WB	SB
HCM Control Delay, s	0	2.5	10.4
HCM LOS			B

Minor Lane/Major Mvmt	EBT	EBR	WBL	WBT	SBLn1
Capacity (veh/h)	-	-	1224	-	769
HCM Lane V/C Ratio	-	-	0.027	-	0.133
HCM Control Delay (s)	-	-	8	-	10.4
HCM Lane LOS	-	-	A	-	B
HCM 95th %tile Q(veh)	-	-	0.1	-	0.5

Intersection	
Int Delay, s/veh	4.2

Movement	EBL	EBT	EBR	WBL	WBT	WBR	NBL	NBT	NBR	SBL	SBT	SBR
Lane Configurations												
Traffic Vol, veh/h	70	60	0	0	55	50	40	0	40	0	0	0
Future Vol, veh/h	70	60	0	0	55	50	40	0	40	0	0	0
Conflicting Peds, #/hr	0	0	0	0	0	0	0	0	0	0	0	0
Sign Control	Free	Free	Free	Free	Free	Free	Stop	Stop	Stop	Stop	Stop	Stop
RT Channelized	-	-	None	-	-	None	-	-	None	-	-	None
Storage Length	0	-	-	-	-	250	-	-	-	-	-	-
Veh in Median Storage, #	-	0	-	-	0	-	-	0	-	-	-	-
Grade, %	-	0	-	-	0	-	-	0	-	-	0	-
Peak Hour Factor	81	81	81	73	73	73	91	91	91	92	92	92
Heavy Vehicles, %	62	62	62	50	50	50	35	35	35	2	2	2
Mvmt Flow	86	74	0	0	75	68	44	0	44	0	0	0

Major/Minor	Major1			Major2			Minor1		
Conflicting Flow All	75	0	-	-	-	0	322	322	74
Stage 1	-	-	-	-	-	-	247	247	-
Stage 2	-	-	-	-	-	-	75	75	-
Critical Hdwy	4.72	-	-	-	-	-	6.75	6.85	6.55
Critical Hdwy Stg 1	-	-	-	-	-	-	5.75	5.85	-
Critical Hdwy Stg 2	-	-	-	-	-	-	5.75	5.85	-
Follow-up Hdwy	2.758	-	-	-	-	-	3.815	4.315	3.615
Pot Cap-1 Maneuver	1217	-	0	0	-	-	609	545	903
Stage 1	-	-	0	0	-	-	723	645	-
Stage 2	-	-	0	0	-	-	871	772	-
Platoon blocked, %		-			-	-			
Mov Cap-1 Maneuver	1217	-	-	-	-	-	566	0	903
Mov Cap-2 Maneuver	-	-	-	-	-	-	566	0	-
Stage 1	-	-	-	-	-	-	672	0	-
Stage 2	-	-	-	-	-	-	871	0	-

Approach	EB	WB	NB
HCM Control Delay, s	4.4	0	10.9
HCM LOS			B

Minor Lane/Major Mvmt	NBLn1	EBL	EBT	WBT	WBR
Capacity (veh/h)	696	1217	-	-	-
HCM Lane V/C Ratio	0.126	0.071	-	-	-
HCM Control Delay (s)	10.9	8.2	-	-	-
HCM Lane LOS	B	A	-	-	-
HCM 95th %tile Q(veh)	0.4	0.2	-	-	-

Intersection	
Int Delay, s/veh	4.8

Movement	EBL	EBT	EBR	WBL	WBT	WBR	NBL	NBT	NBR	SBL	SBT	SBR
Lane Configurations												
Traffic Vol, veh/h	0	80	75	35	80	0	0	0	0	60	0	80
Future Vol, veh/h	0	80	75	35	80	0	0	0	0	60	0	80
Conflicting Peds, #/hr	0	0	0	0	0	0	0	0	0	0	0	0
Sign Control	Free	Free	Free	Free	Free	Free	Stop	Stop	Stop	Stop	Stop	Stop
RT Channelized	-	-	None	-	-	None	-	-	None	-	-	None
Storage Length	-	-	250	0	-	-	-	-	-	-	-	-
Veh in Median Storage, #	-	0	-	-	0	-	-	-	-	-	0	-
Grade, %	-	0	-	-	0	-	-	0	-	-	0	-
Peak Hour Factor	81	81	81	81	81	81	92	92	92	78	78	78
Heavy Vehicles, %	50	50	50	46	46	46	2	2	2	49	49	49
Mvmt Flow	0	99	93	43	99	0	0	0	0	77	0	103

Major/Minor	Major1			Major2			Minor2		
Conflicting Flow All	-	0	0	99	0	0	284	284	99
Stage 1	-	-	-	-	-	-	185	185	-
Stage 2	-	-	-	-	-	-	99	99	-
Critical Hdwy	-	-	-	4.56	-	-	6.89	6.99	6.69
Critical Hdwy Stg 1	-	-	-	-	-	-	5.89	5.99	-
Critical Hdwy Stg 2	-	-	-	-	-	-	5.89	5.99	-
Follow-up Hdwy	-	-	-	2.614	-	-	3.941	4.441	3.741
Pot Cap-1 Maneuver	0	-	-	1259	-	0	617	554	842
Stage 1	0	-	-	-	-	0	746	666	-
Stage 2	0	-	-	-	-	0	820	730	-
Platoon blocked, %		-	-		-				
Mov Cap-1 Maneuver	-	-	-	1259	-	-	596	0	842
Mov Cap-2 Maneuver	-	-	-	-	-	-	596	0	-
Stage 1	-	-	-	-	-	-	721	0	-
Stage 2	-	-	-	-	-	-	820	0	-

Approach	EB	WB	SB
HCM Control Delay, s	0	2.4	11.7
HCM LOS			B

Minor Lane/Major Mvmt	EBT	EBR	WBL	WBT	SBLn1
Capacity (veh/h)	-	-	1259	-	715
HCM Lane V/C Ratio	-	-	0.034	-	0.251
HCM Control Delay (s)	-	-	8	-	11.7
HCM Lane LOS	-	-	A	-	B
HCM 95th %tile Q(veh)	-	-	0.1	-	1

Intersection	
Int Delay, s/veh	5.3

Movement	EBL	EBT	EBR	WBL	WBT	WBR	NBL	NBT	NBR	SBL	SBT	SBR
Lane Configurations												
Traffic Vol, veh/h	60	80	0	0	65	65	50	0	70	0	0	0
Future Vol, veh/h	60	80	0	0	65	65	50	0	70	0	0	0
Conflicting Peds, #/hr	0	0	0	0	0	0	0	0	0	0	0	0
Sign Control	Free	Free	Free	Free	Free	Free	Stop	Stop	Stop	Stop	Stop	Stop
RT Channelized	-	-	None	-	-	None	-	-	None	-	-	None
Storage Length	0	-	-	-	-	250	-	-	-	-	-	-
Veh in Median Storage, #	-	0	-	-	0	-	-	0	-	-	-	-
Grade, %	-	0	-	-	0	-	-	0	-	-	0	-
Peak Hour Factor	96	96	96	96	96	96	74	74	74	92	92	92
Heavy Vehicles, %	50	50	50	46	46	46	46	46	46	2	2	2
Mvmt Flow	63	83	0	0	68	68	68	0	95	0	0	0

Major/Minor	Major1			Major2			Minor1		
Conflicting Flow All	68	0	-	-	-	0	276	276	83
Stage 1	-	-	-	-	-	-	208	208	-
Stage 2	-	-	-	-	-	-	68	68	-
Critical Hdwy	4.6	-	-	-	-	-	6.86	6.96	6.66
Critical Hdwy Stg 1	-	-	-	-	-	-	5.86	5.96	-
Critical Hdwy Stg 2	-	-	-	-	-	-	5.86	5.96	-
Follow-up Hdwy	2.65	-	-	-	-	-	3.914	4.414	3.714
Pot Cap-1 Maneuver	1277	-	0	0	-	-	629	564	867
Stage 1	-	-	0	0	-	-	733	655	-
Stage 2	-	-	0	0	-	-	854	760	-
Platoon blocked, %		-			-	-			
Mov Cap-1 Maneuver	1277	-	-	-	-	-	598	0	867
Mov Cap-2 Maneuver	-	-	-	-	-	-	598	0	-
Stage 1	-	-	-	-	-	-	697	0	-
Stage 2	-	-	-	-	-	-	854	0	-

Approach	EB	WB	NB
HCM Control Delay, s	3.4	0	11.3
HCM LOS			B

Minor Lane/Major Mvmt	NBLn1	EBL	EBT	WBT	WBR
Capacity (veh/h)	730	1277	-	-	-
HCM Lane V/C Ratio	0.222	0.049	-	-	-
HCM Control Delay (s)	11.3	8	-	-	-
HCM Lane LOS	B	A	-	-	-
HCM 95th %tile Q(veh)	0.8	0.2	-	-	-

APPENDIX C – Build 2022: Signalized Analysis

Lane Group	EBT	EBR	WBL	WBT	SBT
Lane Configurations					
Traffic Volume (vph)	105	60	30	65	0
Future Volume (vph)	105	60	30	65	0
Turn Type	NA	Perm	Perm	NA	NA
Protected Phases	2			6	4
Permitted Phases		2	6		
Detector Phase	2	2	6	6	4
Switch Phase					
Minimum Initial (s)	5.0	5.0	5.0	5.0	5.0
Minimum Split (s)	23.5	23.5	23.5	23.5	27.5
Total Split (s)	51.0	51.0	51.0	51.0	49.0
Total Split (%)	51.0%	51.0%	51.0%	51.0%	49.0%
Yellow Time (s)	3.5	3.5	3.5	3.5	3.5
All-Red Time (s)	2.0	2.0	2.0	2.0	2.0
Lost Time Adjust (s)	0.0	0.0	0.0	0.0	0.0
Total Lost Time (s)	5.5	5.5	5.5	5.5	5.5
Lead/Lag					
Lead-Lag Optimize?					
Recall Mode	Min	Min	Min	Min	Min

Intersection Summary
Cycle Length: 100
Actuated Cycle Length: 25.9
Natural Cycle: 55
Control Type: Semi Act-Uncoord

Splits and Phases: 1: I-75 SB Ramps & Bellville Road

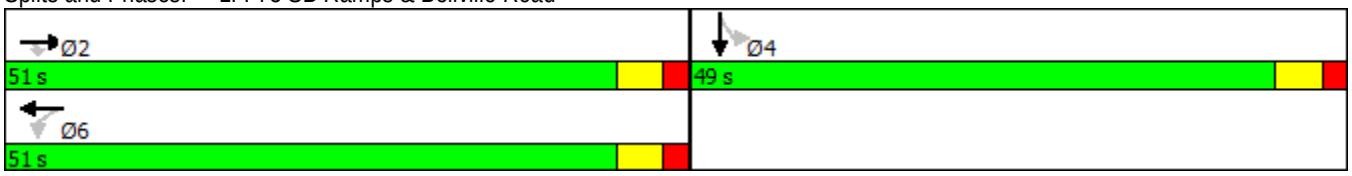

Movement	EBL	EBT	EBR	WBL	WBT	WBR	NBL	NBT	NBR	SBL	SBT	SBR
Lane Configurations												
Traffic Volume (veh/h)	0	105	60	30	65	0	0	0	0	25	0	60
Future Volume (veh/h)	0	105	60	30	65	0	0	0	0	25	0	60
Number	5	2	12	1	6	16				7	4	14
Initial Q (Qb), veh	0	0	0	0	0	0				0	0	0
Ped-Bike Adj(A_pbT)	1.00		1.00	1.00		1.00				1.00		1.00
Parking Bus, Adj	1.00	1.00	1.00	1.00	1.00	1.00				1.00	1.00	1.00
Adj Sat Flow, veh/h/ln	0	1173	1173	1267	1267	0				1900	1218	1900
Adj Flow Rate, veh/h	0	114	65	33	72	0				30	0	72
Adj No. of Lanes	0	1	1	1	1	0				0	1	0
Peak Hour Factor	0.92	0.92	0.92	0.90	0.90	0.90				0.83	0.83	0.83
Percent Heavy Veh, %	0	62	62	50	50	0				0	56	0
Cap, veh/h	0	394	335	515	425	0				65	0	157
Arrive On Green	0.00	0.34	0.34	0.34	0.34	0.00				0.21	0.00	0.21
Sat Flow, veh/h	0	1173	997	816	1267	0				314	0	755
Grp Volume(v), veh/h	0	114	65	33	72	0				102	0	0
Grp Sat Flow(s),veh/h/ln	0	1173	997	816	1267	0				1069	0	0
Q Serve(g_s), s	0.0	1.7	1.1	0.7	1.0	0.0				2.0	0.0	0.0
Cycle Q Clear(g_c), s	0.0	1.7	1.1	2.5	1.0	0.0				2.0	0.0	0.0
Prop In Lane	0.00		1.00	1.00		0.00				0.29		0.71
Lane Grp Cap(c), veh/h	0	394	335	515	425	0				222	0	0
V/C Ratio(X)	0.00	0.29	0.19	0.06	0.17	0.00				0.46	0.00	0.00
Avail Cap(c_a), veh/h	0	2215	1883	1782	2392	0				1930	0	0
HCM Platoon Ratio	1.00	1.00	1.00	1.00	1.00	1.00				1.00	1.00	1.00
Upstream Filter(I)	0.00	1.00	1.00	1.00	1.00	0.00				1.00	0.00	0.00
Uniform Delay (d), s/veh	0.0	5.9	5.7	6.8	5.6	0.0				8.4	0.0	0.0
Incr Delay (d2), s/veh	0.0	0.4	0.3	0.1	0.2	0.0				1.5	0.0	0.0
Initial Q Delay(d3),s/veh	0.0	0.0	0.0	0.0	0.0	0.0				0.0	0.0	0.0
%ile BackOfQ(95%),veh/ln	0.0	1.0	0.6	0.3	0.6	0.0				1.2	0.0	0.0
LnGrp Delay(d),s/veh	0.0	6.3	6.0	6.8	5.8	0.0				9.8	0.0	0.0
LnGrp LOS		A	A	A	A					A		
Approach Vol, veh/h		179			105						102	
Approach Delay, s/veh		6.2			6.1						9.8	
Approach LOS		A			A						A	

Timer	1	2	3	4	5	6	7	8
Assigned Phs		2		4		6		
Phs Duration (G+Y+Rc), s		13.6		10.5		13.6		
Change Period (Y+Rc), s		5.5		5.5		5.5		
Max Green Setting (Gmax), s		45.5		43.5		45.5		
Max Q Clear Time (g_c+I1), s		3.7		4.0		4.5		
Green Ext Time (p_c), s		3.6		0.4		3.6		

Intersection Summary	
HCM 2010 Ctrl Delay	7.1
HCM 2010 LOS	A

Lane Group	EBL	EBT	WBT	WBR	NBT
Lane Configurations					
Traffic Volume (vph)	70	60	55	50	0
Future Volume (vph)	70	60	55	50	0
Turn Type	Perm	NA	NA	Perm	NA
Protected Phases		2	6		8
Permitted Phases	2			6	
Detector Phase	2	2	6	6	8
Switch Phase					
Minimum Initial (s)	5.0	5.0	5.0	5.0	5.0
Minimum Split (s)	23.5	23.5	23.5	23.5	27.5
Total Split (s)	56.0	56.0	56.0	56.0	44.0
Total Split (%)	56.0%	56.0%	56.0%	56.0%	44.0%
Yellow Time (s)	3.5	3.5	3.5	3.5	3.5
All-Red Time (s)	2.0	2.0	2.0	2.0	2.0
Lost Time Adjust (s)	0.0	0.0	0.0	0.0	0.0
Total Lost Time (s)	5.5	5.5	5.5	5.5	5.5
Lead/Lag					
Lead-Lag Optimize?					
Recall Mode	Min	Min	Min	Min	Min

Intersection Summary
Cycle Length: 100
Actuated Cycle Length: 25.9
Natural Cycle: 55
Control Type: Actuated-Uncoordinated

Splits and Phases: 2: I-75 NB Ramps & Bellville Road

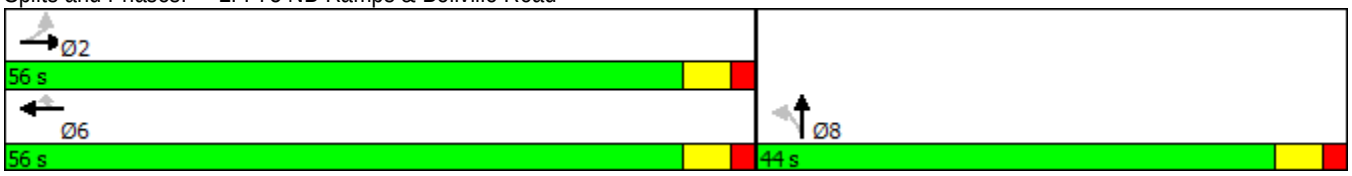

Movement	EBL	EBT	EBR	WBL	WBT	WBR	NBL	NBT	NBR	SBL	SBT	SBR
Lane Configurations												
Traffic Volume (veh/h)	70	60	0	0	55	50	40	0	40	0	0	0
Future Volume (veh/h)	70	60	0	0	55	50	40	0	40	0	0	0
Number	5	2	12	1	6	16	3	8	18			
Initial Q (Qb), veh	0	0	0	0	0	0	0	0	0			
Ped-Bike Adj(A_pbT)	1.00		1.00	1.00		1.00	1.00		1.00			
Parking Bus, Adj	1.00	1.00	1.00	1.00	1.00	1.00	1.00	1.00	1.00			
Adj Sat Flow, veh/h/ln	1173	1173	0	0	1267	1267	1900	1407	1900			
Adj Flow Rate, veh/h	86	74	0	0	75	68	44	0	44			
Adj No. of Lanes	1	1	0	0	1	1	0	1	0			
Peak Hour Factor	0.81	0.81	0.81	0.73	0.73	0.73	0.91	0.91	0.91			
Percent Heavy Veh, %	62	62	0	0	50	50	0	35	0			
Cap, veh/h	534	410	0	0	443	376	129	0	129			
Arrive On Green	0.35	0.35	0.00	0.00	0.35	0.35	0.20	0.00	0.20			
Sat Flow, veh/h	781	1173	0	0	1267	1077	632	0	632			
Grp Volume(v), veh/h	86	74	0	0	75	68	88	0	0			
Grp Sat Flow(s),veh/h/ln	781	1173	0	0	1267	1077	1264	0	0			
Q Serve(g_s), s	2.1	1.1	0.0	0.0	1.0	1.1	1.5	0.0	0.0			
Cycle Q Clear(g_c), s	3.1	1.1	0.0	0.0	1.0	1.1	1.5	0.0	0.0			
Prop In Lane	1.00		0.00	0.00		1.00	0.50		0.50			
Lane Grp Cap(c), veh/h	534	410	0	0	443	376	257	0	0			
V/C Ratio(X)	0.16	0.18	0.00	0.00	0.17	0.18	0.34	0.00	0.00			
Avail Cap(c_a), veh/h	1864	2408	0	0	2601	2211	1979	0	0			
HCM Platoon Ratio	1.00	1.00	1.00	1.00	1.00	1.00	1.00	1.00	1.00			
Upstream Filter(I)	1.00	1.00	0.00	0.00	1.00	1.00	1.00	0.00	0.00			
Uniform Delay (d), s/veh	6.6	5.6	0.0	0.0	5.5	5.6	8.4	0.0	0.0			
Incr Delay (d2), s/veh	0.1	0.2	0.0	0.0	0.2	0.2	0.8	0.0	0.0			
Initial Q Delay(d3),s/veh	0.0	0.0	0.0	0.0	0.0	0.0	0.0	0.0	0.0			
%ile BackOfQ(95%),veh/ln	0.9	0.7	0.0	0.0	0.6	0.6	1.0	0.0	0.0			
LnGrp Delay(d),s/veh	6.7	5.8	0.0	0.0	5.7	5.8	9.2	0.0	0.0			
LnGrp LOS	A	A			A	A	A					
Approach Vol, veh/h		160			143			88				
Approach Delay, s/veh		6.3			5.7			9.2				
Approach LOS		A			A			A				

Timer	1	2	3	4	5	6	7	8
Assigned Phs		2				6		8
Phs Duration (G+Y+Rc), s		14.1				14.1		10.5
Change Period (Y+Rc), s		5.5				5.5		5.5
Max Green Setting (Gmax), s		50.5				50.5		38.5
Max Q Clear Time (g_c+I1), s		5.1				3.1		3.5
Green Ext Time (p_c), s		3.5				3.5		0.3

Intersection Summary	
HCM 2010 Ctrl Delay	6.7
HCM 2010 LOS	A

Lane Group	EBT	EBR	WBL	WBT	SBT
Lane Configurations					
Traffic Volume (vph)	80	75	35	80	0
Future Volume (vph)	80	75	35	80	0
Turn Type	NA	Perm	Perm	NA	NA
Protected Phases	2			6	4
Permitted Phases		2	6		
Detector Phase	2	2	6	6	4
Switch Phase					
Minimum Initial (s)	5.0	5.0	5.0	5.0	5.0
Minimum Split (s)	23.5	23.5	23.5	23.5	27.5
Total Split (s)	43.0	43.0	43.0	43.0	57.0
Total Split (%)	43.0%	43.0%	43.0%	43.0%	57.0%
Yellow Time (s)	3.5	3.5	3.5	3.5	3.5
All-Red Time (s)	2.0	2.0	2.0	2.0	2.0
Lost Time Adjust (s)	0.0	0.0	0.0	0.0	0.0
Total Lost Time (s)	5.5	5.5	5.5	5.5	5.5
Lead/Lag					
Lead-Lag Optimize?					
Recall Mode	Min	Min	Min	Min	Min

Intersection Summary
Cycle Length: 100
Actuated Cycle Length: 26.9
Natural Cycle: 55
Control Type: Actuated-Uncoordinated

Splits and Phases: 1: I-75 SB Ramps & Bellville Road

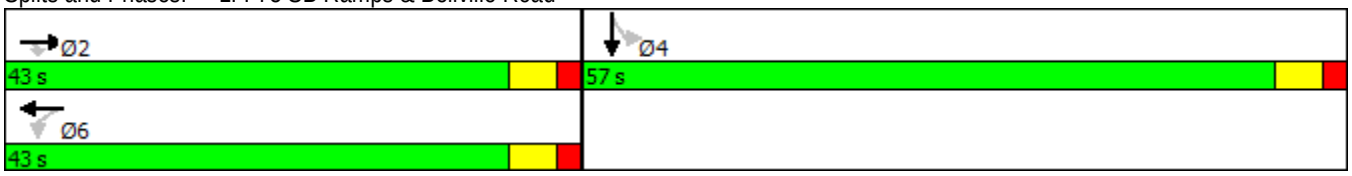

Movement	EBL	EBT	EBR	WBL	WBT	WBR	NBL	NBT	NBR	SBL	SBT	SBR
Lane Configurations												
Traffic Volume (veh/h)	0	80	75	35	80	0	0	0	0	60	0	80
Future Volume (veh/h)	0	80	75	35	80	0	0	0	0	60	0	80
Number	5	2	12	1	6	16				7	4	14
Initial Q (Qb), veh	0	0	0	0	0	0				0	0	0
Ped-Bike Adj(A_pbT)	1.00		1.00	1.00		1.00				1.00		1.00
Parking Bus, Adj	1.00	1.00	1.00	1.00	1.00	1.00				1.00	1.00	1.00
Adj Sat Flow, veh/h/ln	0	1267	1267	1301	1301	0				1900	1275	1900
Adj Flow Rate, veh/h	0	99	93	43	99	0				77	0	103
Adj No. of Lanes	0	1	1	1	1	0				0	1	0
Peak Hour Factor	0.81	0.81	0.81	0.81	0.81	0.81				0.78	0.78	0.78
Percent Heavy Veh, %	0	50	50	46	46	0				0	49	0
Cap, veh/h	0	409	348	502	420	0				120	0	160
Arrive On Green	0.00	0.32	0.32	0.32	0.32	0.00				0.25	0.00	0.25
Sat Flow, veh/h	0	1267	1077	829	1301	0				486	0	650
Grp Volume(v), veh/h	0	99	93	43	99	0				180	0	0
Grp Sat Flow(s),veh/h/ln	0	1267	1077	829	1301	0				1136	0	0
Q Serve(g_s), s	0.0	1.5	1.6	1.0	1.4	0.0				3.6	0.0	0.0
Cycle Q Clear(g_c), s	0.0	1.5	1.6	2.5	1.4	0.0				3.6	0.0	0.0
Prop In Lane	0.00		1.00	1.00		0.00				0.43		0.57
Lane Grp Cap(c), veh/h	0	409	348	502	420	0				280	0	0
V/C Ratio(X)	0.00	0.24	0.27	0.09	0.24	0.00				0.64	0.00	0.00
Avail Cap(c_a), veh/h	0	1858	1579	1449	1909	0				2288	0	0
HCM Platoon Ratio	1.00	1.00	1.00	1.00	1.00	1.00				1.00	1.00	1.00
Upstream Filter(I)	0.00	1.00	1.00	1.00	1.00	0.00				1.00	0.00	0.00
Uniform Delay (d), s/veh	0.0	6.4	6.4	7.3	6.3	0.0				8.6	0.0	0.0
Incr Delay (d2), s/veh	0.0	0.3	0.4	0.1	0.3	0.0				2.5	0.0	0.0
Initial Q Delay(d3),s/veh	0.0	0.0	0.0	0.0	0.0	0.0				0.0	0.0	0.0
%ile BackOfQ(95%),veh/ln	0.0	1.0	0.9	0.4	1.0	0.0				2.3	0.0	0.0
LnGrp Delay(d),s/veh	0.0	6.7	6.8	7.3	6.6	0.0				11.1	0.0	0.0
LnGrp LOS		A	A	A	A					B		
Approach Vol, veh/h		192			142						180	
Approach Delay, s/veh		6.7			6.8						11.1	
Approach LOS		A			A						B	

Timer	1	2	3	4	5	6	7	8
Assigned Phs		2		4		6		
Phs Duration (G+Y+Rc), s		13.8		11.8		13.8		
Change Period (Y+Rc), s		5.5		5.5		5.5		
Max Green Setting (Gmax), s		37.5		51.5		37.5		
Max Q Clear Time (g_c+I1), s		3.6		5.6		4.5		
Green Ext Time (p_c), s		3.8		0.7		3.8		

Intersection Summary	
HCM 2010 Ctrl Delay	8.3
HCM 2010 LOS	A

Lane Group	EBL	EBT	WBT	WBR	NBT
Lane Configurations					
Traffic Volume (vph)	60	80	65	65	0
Future Volume (vph)	60	80	65	65	0
Turn Type	Perm	NA	NA	Perm	NA
Protected Phases		2	6		8
Permitted Phases	2			6	
Detector Phase	2	2	6	6	8
Switch Phase					
Minimum Initial (s)	5.0	5.0	5.0	5.0	5.0
Minimum Split (s)	23.5	23.5	23.5	23.5	27.5
Total Split (s)	45.0	45.0	45.0	45.0	55.0
Total Split (%)	45.0%	45.0%	45.0%	45.0%	55.0%
Yellow Time (s)	3.5	3.5	3.5	3.5	3.5
All-Red Time (s)	2.0	2.0	2.0	2.0	2.0
Lost Time Adjust (s)	0.0	0.0	0.0	0.0	0.0
Total Lost Time (s)	5.5	5.5	5.5	5.5	5.5
Lead/Lag					
Lead-Lag Optimize?					
Recall Mode	Min	Min	Min	Min	Min

Intersection Summary
Cycle Length: 100
Actuated Cycle Length: 25.9
Natural Cycle: 55
Control Type: Actuated-Uncoordinated

Splits and Phases: 2: I-75 NB Ramps & Bellville Road

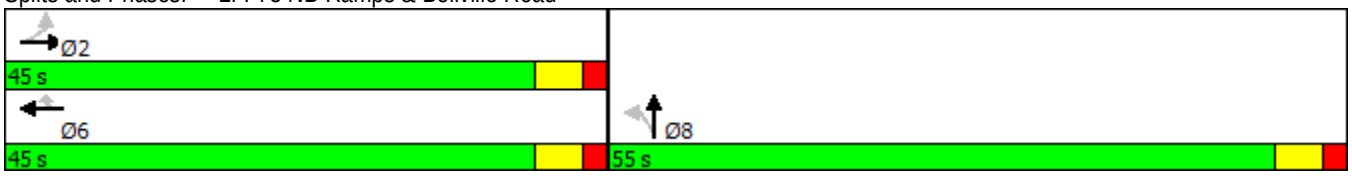

Movement	EBL	EBT	EBR	WBL	WBT	WBR	NBL	NBT	NBR	SBL	SBT	SBR
Lane Configurations												
Traffic Volume (veh/h)	60	80	0	0	65	65	50	0	70	0	0	0
Future Volume (veh/h)	60	80	0	0	65	65	50	0	70	0	0	0
Number	5	2	12	1	6	16	3	8	18			
Initial Q (Qb), veh	0	0	0	0	0	0	0	0	0			
Ped-Bike Adj(A_pbT)	1.00		1.00	1.00		1.00	1.00		1.00			
Parking Bus, Adj	1.00	1.00	1.00	1.00	1.00	1.00	1.00	1.00	1.00			
Adj Sat Flow, veh/h/ln	1267	1267	0	0	1301	1301	1900	1301	1900			
Adj Flow Rate, veh/h	62	83	0	0	68	68	68	0	95			
Adj No. of Lanes	1	1	0	0	1	1	0	1	0			
Peak Hour Factor	0.96	0.96	0.96	0.96	0.96	0.96	0.74	0.74	0.74			
Percent Heavy Veh, %	50	50	0	0	46	46	0	46	0			
Cap, veh/h	528	388	0	0	399	339	113	0	158			
Arrive On Green	0.31	0.31	0.00	0.00	0.31	0.31	0.23	0.00	0.23			
Sat Flow, veh/h	849	1267	0	0	1301	1106	483	0	675			
Grp Volume(v), veh/h	62	83	0	0	68	68	163	0	0			
Grp Sat Flow(s),veh/h/ln	849	1267	0	0	1301	1106	1158	0	0			
Q Serve(g_s), s	1.4	1.2	0.0	0.0	0.9	1.1	3.0	0.0	0.0			
Cycle Q Clear(g_c), s	2.3	1.2	0.0	0.0	0.9	1.1	3.0	0.0	0.0			
Prop In Lane	1.00		0.00	0.00		1.00	0.42		0.58			
Lane Grp Cap(c), veh/h	528	388	0	0	399	339	271	0	0			
V/C Ratio(X)	0.12	0.21	0.00	0.00	0.17	0.20	0.60	0.00	0.00			
Avail Cap(c_a), veh/h	1667	2088	0	0	2145	1823	2392	0	0			
HCM Platoon Ratio	1.00	1.00	1.00	1.00	1.00	1.00	1.00	1.00	1.00			
Upstream Filter(I)	1.00	1.00	0.00	0.00	1.00	1.00	1.00	0.00	0.00			
Uniform Delay (d), s/veh	6.9	6.2	0.0	0.0	6.1	6.1	8.2	0.0	0.0			
Incr Delay (d2), s/veh	0.1	0.3	0.0	0.0	0.2	0.3	2.1	0.0	0.0			
Initial Q Delay(d3),s/veh	0.0	0.0	0.0	0.0	0.0	0.0	0.0	0.0	0.0			
%ile BackOfQ(95%),veh/ln	0.6	0.8	0.0	0.0	0.6	0.6	2.0	0.0	0.0			
LnGrp Delay(d),s/veh	7.0	6.4	0.0	0.0	6.3	6.4	10.3	0.0	0.0			
LnGrp LOS	A	A			A	A	B					
Approach Vol, veh/h		145			136			163				
Approach Delay, s/veh		6.7			6.4			10.3				
Approach LOS		A			A			B				

Timer	1	2	3	4	5	6	7	8
Assigned Phs		2				6		8
Phs Duration (G+Y+Rc), s		12.8				12.8		11.1
Change Period (Y+Rc), s		5.5				5.5		5.5
Max Green Setting (Gmax), s		39.5				39.5		49.5
Max Q Clear Time (g_c+I1), s		4.3				3.1		5.0
Green Ext Time (p_c), s		3.1				3.1		0.6

Intersection Summary	
HCM 2010 Ctrl Delay	7.9
HCM 2010 LOS	A

APPENDIX D – Build 2022: GDOT Roundabout Analysis

General & Site Information

v 4.0

Analyst:	GKW
Agency/Co:	Jacobs
Date:	5/16/2017
Project or PI#:	CB506050
Year, Peak Hour:	2022 AM
County/District:	Lowndes
Intersection Name:	Bellville Road SB Ramps

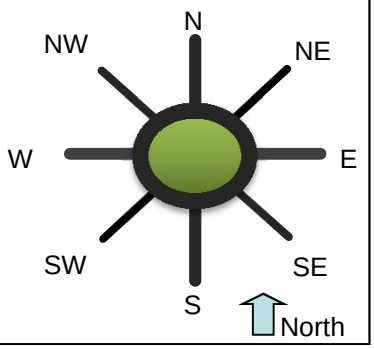

Volumes		Entry Legs (FROM)							
		N (1)	NE (2)	E (3)	SE (4)	S (5)	SW (6)	W (7)	NW (8)
Exit Legs (TO)	N (1), vph			0		0		0	
	NE (2), vph								
	E (3), vph	25				0		105	
	SE (4), vph								
	S (5), vph	0		30				60	
	SW (6), vph								
	W (7), vph	60		65		0			
	NW (8), vph								
Output	Total Vehicles	85	0	95	0	0	0	165	0

Volume Characteristics	N	NE	E	SE	S	SW	W	NW
% Cars	44.0%	100.0%	50.0%	100.0%	100.0%	100.0%	38.0%	100.0%
% Heavy Vehicles	56.0%	0.0%	50.0%	0.0%	0.0%	0.0%	62.0%	0.0%
% Bicycle	0.0%	0.0%	0.0%	0.0%	0.0%	0.0%	0.0%	0.0%
# of Pedestrians (ped/hr)	0	0	0	0	0	0	0	0
PHF	*0.83*	*0.95*	*0.90*	*0.95*	*0.95*	*0.95*	*0.92*	*0.95*
F_{HV}	0.641	1.000	0.667	1.000	1.000	1.000	0.617	1.000
F_{ped}	1.000	1.000	1.000	1.000	1.000	1.000	1.000	1.000

Entry/Conflicting Flows	N	NE	E	SE	S	SW	W	NW
Flow to Leg # N (1), pcu/h	0	0	0	0	0	0	0	0
NE (2), pcu/h	0	0	0	0	0	0	0	0
E (3), pcu/h	47	0	0	0	0	0	185	0
SE (4), pcu/h	0	0	0	0	0	0	0	0
S (5), pcu/h	0	0	50	0	0	0	106	0
SW (6), pcu/h	0	0	0	0	0	0	0	0
W (7), pcu/h	113	0	108	0	0	0	0	0
NW (8), pcu/h	0	0	0	0	0	0	0	0
Entry flow, pcu/h	160	0	158	0	0	0	291	0
Conflicting flow, pcu/h	158	0	0	0	0	0	97	0

Results: Approach Measures of Effectiveness

HCM 6th Edition	N	NE	E	SE	S	SW	W	NW
Entry Capacity, vph	753	NA	920	NA	1380	NA	772	NA
Entry Flow Rates, vph	102	NA	106	NA	0	NA	179	NA
V/C ratio	0.14		0.11		0.00		0.23	
Control Delay, sec/pcu	6		5		3		7	
LOS	A		A		A		A	
95th % Queue (ft)	18		15		0		36	

Notes:

v 4.0

Unit Legend:
vph = vehicles per hour
PHF = peak hour factor
F_{HV} = heavy vehicle factor
pcu = passenger car unit

Bypass Lane Merge Point Analysis (if applicable)

General & Site Information

v 4.0

Analyst:	GKW
Agency/Co:	Jacobs
Date:	5/16/2017
Project or PI#:	CB506050
Year, Peak Hour:	2022 PM
County/District:	Lowndes
Intersection Name:	Bellville Road SB Ramps

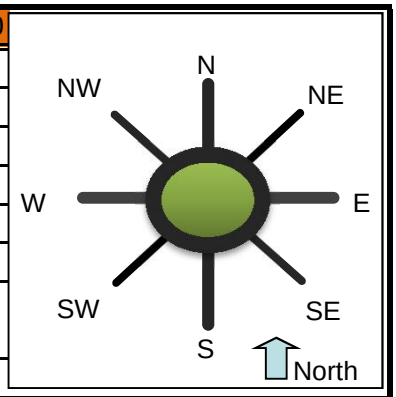

Volumes		Entry Legs (FROM)							
		N (1)	NE (2)	E (3)	SE (4)	S (5)	SW (6)	W (7)	NW (8)
Exit Legs (TO)	N (1), vph			0		0		0	
	NE (2), vph								
	E (3), vph	60				0		80	
	SE (4), vph								
	S (5), vph	0		35				75	
	SW (6), vph								
	W (7), vph	80		80		0			
	NW (8), vph								
Output	Total Vehicles	140	0	115	0	0	0	155	0

Volume Characteristics	N	NE	E	SE	S	SW	W	NW
% Cars	51.0%	100.0%	54.0%	100.0%	100.0%	100.0%	50.0%	100.0%
% Heavy Vehicles	49.0%	0.0%	46.0%	0.0%	0.0%	0.0%	50.0%	0.0%
% Bicycle	0.0%	0.0%	0.0%	0.0%	0.0%	0.0%	0.0%	0.0%
# of Pedestrians (ped/hr)	0	0	0	0	0	0	0	0
PHF	*0.78*	*0.95*	*0.81*	*0.95*	*0.95*	*0.95*	*0.81*	*0.95*
F_{HV}	0.671	1.000	0.685	1.000	1.000	1.000	0.667	1.000
F_{ped}	1.000	1.000	1.000	1.000	1.000	1.000	1.000	1.000

Entry/Conflicting Flows	N	NE	E	SE	S	SW	W	NW
Flow to Leg # N (1), pcu/h	0	0	0	0	0	0	0	0
NE (2), pcu/h	0	0	0	0	0	0	0	0
E (3), pcu/h	115	0	0	0	0	0	148	0
SE (4), pcu/h	0	0	0	0	0	0	0	0
S (5), pcu/h	0	0	63	0	0	0	139	0
SW (6), pcu/h	0	0	0	0	0	0	0	0
W (7), pcu/h	153	0	144	0	0	0	0	0
NW (8), pcu/h	0	0	0	0	0	0	0	0
Entry flow, pcu/h	267	0	207	0	0	0	287	0
Conflicting flow, pcu/h	207	0	0	0	0	0	178	0

Results: Approach Measures of Effectiveness

HCM 6th Edition	N	NE	E	SE	S	SW	W	NW
Entry Capacity, vph	750	NA	945	NA	1380	NA	767	NA
Entry Flow Rates, vph	179	NA	142	NA	0	NA	191	NA
V/C ratio	0.24		0.15		0.00		0.25	
Control Delay, sec/pcu	8		5		3		7	
LOS	A		A		A		A	
95th % Queue (ft)	35		19		0		37	

Notes:

v 4.0

Unit Legend:
vph = vehicles per hour
PHF = peak hour factor
F_{HV} = heavy vehicle factor
pcu = passenger car unit

Bypass Lane Merge Point Analysis (if applicable)

General & Site Information

v 4.0

Analyst:	GKW
Agency/Co:	Jacobs
Date:	5/16/2017
Project or PI#:	CB506050
Year, Peak Hour:	2022 AM
County/District:	Lowndes
Intersection Name:	Bellville Road NB Ramps

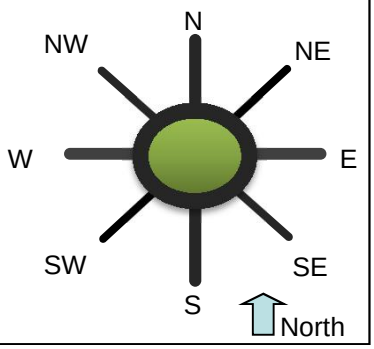

Volumes		Entry Legs (FROM)							
		N (1)	NE (2)	E (3)	SE (4)	S (5)	SW (6)	W (7)	NW (8)
Exit Legs (TO)	N (1), vph			50		0		70	
	NE (2), vph								
	E (3), vph	0				40		60	
	SE (4), vph								
	S (5), vph	0		0				0	
	SW (6), vph								
	W (7), vph	0		55		40			
	NW (8), vph								
Output	Total Vehicles	0	0	105	0	80	0	130	0

Volume Characteristics	N	NE	E	SE	S	SW	W	NW
% Cars	100.0%	100.0%	50.0%	100.0%	65.0%	100.0%	38.0%	100.0%
% Heavy Vehicles	0.0%	0.0%	50.0%	0.0%	35.0%	0.0%	62.0%	0.0%
% Bicycle	0.0%	0.0%	0.0%	0.0%	0.0%	0.0%	0.0%	0.0%
# of Pedestrians (ped/hr)	0	0	0	0	0	0	0	0
PHF	*0.95*	*0.95*	*0.73*	*0.95*	*0.91*	*0.95*	*0.81*	*0.95*
F_{HV}	1.000	1.000	0.667	1.000	0.741	1.000	0.617	1.000
F_{ped}	1.000	1.000	1.000	1.000	1.000	1.000	1.000	1.000

Entry/Conflicting Flows	N	NE	E	SE	S	SW	W	NW
Flow to Leg # N (1), pcu/h	0	0	103	0	0	0	140	0
NE (2), pcu/h	0	0	0	0	0	0	0	0
E (3), pcu/h	0	0	0	0	59	0	120	0
SE (4), pcu/h	0	0	0	0	0	0	0	0
S (5), pcu/h	0	0	0	0	0	0	0	0
SW (6), pcu/h	0	0	0	0	0	0	0	0
W (7), pcu/h	0	0	113	0	59	0	0	0
NW (8), pcu/h	0	0	0	0	0	0	0	0
Entry flow, pcu/h	0	0	216	0	119	0	260	0
Conflicting flow, pcu/h	0	0	199	0	260	0	0	0

Results: Approach Measures of Effectiveness

HCM 6th Edition	N	NE	E	SE	S	SW	W	NW
Entry Capacity, vph	1380	NA	751	NA	784	NA	852	NA
Entry Flow Rates, vph	0	NA	144	NA	88	NA	160	NA
V/C ratio	0.00		0.19		0.11		0.19	
Control Delay, sec/pcu	3		7		6		6	
LOS	A		A		A		A	
95th % Queue (ft)	0		26		13		28	

Notes: v 4.0

Unit Legend:
vph = vehicles per hour
PHF = peak hour factor
F_{HV} = heavy vehicle factor
pcu = passenger car unit

Bypass Lane Merge Point Analysis (if applicable)

General & Site Information

v 4.0

Analyst:	GKW
Agency/Co:	Jacobs
Date:	5/16/2017
Project or PI#:	CB506050
Year, Peak Hour:	2022 PM
County/District:	Lowndes
Intersection Name:	Bellville Road NB Ramps

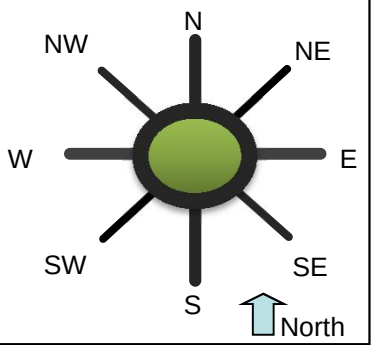

Volumes		Entry Legs (FROM)							
		N (1)	NE (2)	E (3)	SE (4)	S (5)	SW (6)	W (7)	NW (8)
Exit Legs (TO)	N (1), vph			65		0		60	
	NE (2), vph								
	E (3), vph	0				70		80	
	SE (4), vph								
	S (5), vph	0		0				0	
	SW (6), vph								
	W (7), vph	0		65		50			
	NW (8), vph								
Output	Total Vehicles	0	0	130	0	120	0	140	0

Volume Characteristics	N	NE	E	SE	S	SW	W	NW
% Cars	100.0%	100.0%	54.0%	100.0%	54.0%	100.0%	50.0%	100.0%
% Heavy Vehicles	0.0%	0.0%	46.0%	0.0%	46.0%	0.0%	50.0%	0.0%
% Bicycle	0.0%	0.0%	0.0%	0.0%	0.0%	0.0%	0.0%	0.0%
# of Pedestrians (ped/hr)	0	0	0	0	0	0	0	0
PHF	*0.95*	*0.95*	*0.96*	*0.95*	*0.74*	*0.95*	*0.96*	*0.95*
F_{HV}	1.000	1.000	0.685	1.000	0.685	1.000	0.667	1.000
F_{ped}	1.000	1.000	1.000	1.000	1.000	1.000	1.000	1.000

Entry/Conflicting Flows	N	NE	E	SE	S	SW	W	NW
Flow to Leg # N (1), pcu/h	0	0	99	0	0	0	94	0
NE (2), pcu/h	0	0	0	0	0	0	0	0
E (3), pcu/h	0	0	0	0	138	0	125	0
SE (4), pcu/h	0	0	0	0	0	0	0	0
S (5), pcu/h	0	0	0	0	0	0	0	0
SW (6), pcu/h	0	0	0	0	0	0	0	0
W (7), pcu/h	0	0	99	0	99	0	0	0
NW (8), pcu/h	0	0	0	0	0	0	0	0
Entry flow, pcu/h	0	0	198	0	237	0	219	0
Conflicting flow, pcu/h	0	0	192	0	219	0	0	0

Results: Approach Measures of Effectiveness

HCM 6th Edition	N	NE	E	SE	S	SW	W	NW
Entry Capacity, vph	1380	NA	777	NA	756	NA	920	NA
Entry Flow Rates, vph	0	NA	135	NA	162	NA	146	NA
V/C ratio	0.00		0.17		0.21		0.16	
Control Delay, sec/pcu	3		6		7		5	
LOS	A		A		A		A	
95th % Queue (ft)	0		23		30		21	

Notes:

v 4.0

Unit Legend:
vph = vehicles per hour
PHF = peak hour factor
F_{HV} = heavy vehicle factor
pcu = passenger car unit

Bypass Lane Merge Point Analysis (if applicable)

APPENDIX E – Build 2022: SIDRA Roundabout Analysis

MOVEMENT SUMMARY

Site: Bellville Road at NB Ramps (2022 AM)

Network: Network1

Bellville Road at NB Ramps
Roundabout

Movement Performance - Vehicles													
Mov ID	OD Mov	Demand Flows Total veh/h	HV %	Arrival Flows Total veh/h	HV %	Deg. Satn v/c	Average Delay sec	Level of Service	95% Back of Queue Vehicles veh	Distance ft	Prop. Queued	Effective Stop Rate per veh	Average Speed mph
South: I-75 NB Off-Ramp													
3	L2	44	35.0	44	35.0	0.117	6.0	LOS A	0.6	17.9	0.46	0.33	28.1
8	T1	0	35.0	0	35.0	0.117	6.0	LOS A	0.6	17.9	0.46	0.33	33.1
18	R2	44	35.0	44	35.0	0.117	6.0	LOS A	0.6	17.9	0.46	0.33	31.9
Approach		88	35.0	88	35.0	0.117	6.0	LOS A	0.6	17.9	0.46	0.33	30.5
East: Bellville Road													
6	T1	75	50.0	75	50.0	0.207	7.6	LOS A	1.1	37.5	0.47	0.34	29.0
16	R2	68	50.0	68	50.0	0.207	7.6	LOS A	1.1	37.5	0.47	0.34	32.3
Approach		144	50.0	144	50.0	0.207	7.6	LOS A	1.1	37.5	0.47	0.34	31.0
West: Bellville Road													
5	L2	86	62.0	86	62.0	0.191	6.3	LOS A	0.0	0.0	0.00	0.00	33.3
2	T1	74	62.0	74	62.0	0.191	6.3	LOS A	0.0	0.0	0.00	0.00	34.5
Approach		160	62.0	160	62.0	0.191	6.3	LOS A	0.0	0.0	0.00	0.00	33.8
All Vehicles		393	51.5	393	51.5	0.207	6.7	LOS A	1.1	37.5	0.28	0.20	32.0

Level of Service (LOS) Method: Delay & v/c (HCM 2010).
Roundabout LOS Method: Same as Sign Control.
Vehicle movement LOS values are based on average delay and v/c ratio (degree of saturation) per movement
LOS F will result if v/c > 1 irrespective of movement delay value (does not apply for approaches and intersection).
Intersection and Approach LOS values are based on average delay for all movements (v/c not used as specified in HCM 2010).
Roundabout Capacity Model: SIDRA Standard.
HCM Delay Formula option is used. Control Delay does not include Geometric Delay since Exclude Geometric Delay option applies.
Gap-Acceptance Capacity: SIDRA Standard (Akçelik M3D).
HV (%) values are calculated for All Movement Classes of All Heavy Vehicle Model Designation.

Copyright © 2000-2014 Akcelik and Associates Pty Ltd
www.sidrasolutions.com

SIDRA INTERSECTION 6

MOVEMENT SUMMARY

Site: Bellville Road at SB Ramps (2022 AM)

Network: Network1

Bellville Road at SB Ramps
Roundabout

Movement Performance - Vehicles													
Mov ID	OD Mov	Demand Flows Total veh/h	HV %	Arrival Flows Total veh/h	HV %	Deg. Satn v/c	Average Delay sec	Level of Service	95% Back of Queue Vehicles veh	Distance ft	Prop. Queued	Effective Stop Rate per veh	Average Speed mph
East: Bellville Road													
1	L2	33	50.0	33	50.0	0.116	5.1	LOS A	0.0	0.0	0.00	0.00	34.8
6	T1	72	50.0	72	50.0	0.116	5.1	LOS A	0.0	0.0	0.00	0.00	35.8
Approach		106	50.0	106	50.0	0.116	5.1	LOS A	0.0	0.0	0.00	0.00	35.5
North: I-75 SB Off-Ramp													
7	L2	30	56.0	30	56.0	0.146	6.8	LOS A	0.7	25.7	0.40	0.27	28.2
4	T1	0	56.0	0	56.0	0.146	6.8	LOS A	0.7	25.7	0.40	0.27	28.2
14	R2	72	56.0	72	56.0	0.146	6.8	LOS A	0.7	25.7	0.40	0.27	31.7
Approach		102	56.0	102	56.0	0.146	6.8	LOS A	0.7	25.7	0.40	0.27	31.0
West: Bellville Road													
2	T1	114	62.0	114	62.0	0.247	7.8	LOS A	1.3	50.3	0.36	0.22	28.9
12	R2	65	62.0	65	62.0	0.247	7.8	LOS A	1.3	50.3	0.36	0.22	32.0
Approach		179	62.0	179	62.0	0.247	7.8	LOS A	1.3	50.3	0.36	0.22	30.4
All Vehicles		387	57.1	387	57.1	0.247	6.8	LOS A	1.3	50.3	0.27	0.17	31.8

Level of Service (LOS) Method: Delay & v/c (HCM 2010).
Roundabout LOS Method: Same as Sign Control.
Vehicle movement LOS values are based on average delay and v/c ratio (degree of saturation) per movement
LOS F will result if v/c > 1 irrespective of movement delay value (does not apply for approaches and intersection).
Intersection and Approach LOS values are based on average delay for all movements (v/c not used as specified in HCM 2010).
Roundabout Capacity Model: SIDRA Standard.
HCM Delay Formula option is used. Control Delay does not include Geometric Delay since Exclude Geometric Delay option applies.
Gap-Acceptance Capacity: SIDRA Standard (Akçelik M3D).
HV (%) values are calculated for All Movement Classes of All Heavy Vehicle Model Designation.

Copyright © 2000-2014 Akcelik and Associates Pty Ltd
www.sidrasolutions.com

SIDRA INTERSECTION 6

MOVEMENT SUMMARY

Site: Bellville Road at NB Ramps (2022 PM)

Network: Network1

Bellville Road at NB Ramps
Roundabout

Movement Performance - Vehicles													
Mov ID	OD Mov	Demand Flows Total veh/h	HV %	Arrival Flows Total veh/h	HV %	Deg. Satn v/c	Average Delay sec	Level of Service	95% Back of Queue Vehicles veh	Distance ft	Prop. Queued	Effective Stop Rate per veh	Average Speed mph
South: I-75 NB Off-Ramp													
3	L2	68	46.0	68	46.0	0.229	7.7	LOS A	1.2	40.4	0.48	0.36	27.2
8	T1	0	46.0	0	46.0	0.229	7.7	LOS A	1.2	40.4	0.48	0.36	32.4
18	R2	95	46.0	95	46.0	0.229	7.7	LOS A	1.2	40.4	0.48	0.36	31.1
Approach		163	46.0	163	46.0	0.229	7.7	LOS A	1.2	40.4	0.48	0.36	30.0
East: Bellville Road													
6	T1	68	46.0	68	46.0	0.188	7.1	LOS A	1.0	33.4	0.46	0.32	29.3
16	R2	68	46.0	68	46.0	0.188	7.1	LOS A	1.0	33.4	0.46	0.32	32.6
Approach		135	46.0	135	46.0	0.188	7.1	LOS A	1.0	33.4	0.46	0.32	31.4
West: Bellville Road													
5	L2	62	50.0	62	50.0	0.161	5.5	LOS A	0.0	0.0	0.00	0.00	34.3
2	T1	83	50.0	83	50.0	0.161	5.5	LOS A	0.0	0.0	0.00	0.00	35.2
Approach		146	50.0	146	50.0	0.161	5.5	LOS A	0.0	0.0	0.00	0.00	34.8
All Vehicles		444	47.3	444	47.3	0.229	6.8	LOS A	1.2	40.4	0.32	0.23	31.8

Level of Service (LOS) Method: Delay & v/c (HCM 2010).
Roundabout LOS Method: Same as Sign Control.
Vehicle movement LOS values are based on average delay and v/c ratio (degree of saturation) per movement
LOS F will result if v/c > 1 irrespective of movement delay value (does not apply for approaches and intersection).
Intersection and Approach LOS values are based on average delay for all movements (v/c not used as specified in HCM 2010).
Roundabout Capacity Model: SIDRA Standard.
HCM Delay Formula option is used. Control Delay does not include Geometric Delay since Exclude Geometric Delay option applies.
Gap-Acceptance Capacity: SIDRA Standard (Akçelik M3D).
HV (%) values are calculated for All Movement Classes of All Heavy Vehicle Model Designation.

Copyright © 2000-2014 Akcelik and Associates Pty Ltd
www.sidrasolutions.com

SIDRA INTERSECTION 6

MOVEMENT SUMMARY

Site: Bellville Road at SB Ramps (2022 PM)

Network: Network1

Bellville Road at SB Ramps
Roundabout

Movement Performance - Vehicles													
Mov ID	OD Mov	Demand Flows Total veh/h	HV %	Arrival Flows Total veh/h	HV %	Deg. Satn v/c	Average Delay sec	Level of Service	95% Back of Queue Vehicles veh	Distance ft	Prop. Queued	Effective Stop Rate per veh	Average Speed mph
East: Bellville Road													
1	L2	43	46.0	43	46.0	0.152	5.3	LOS A	0.0	0.0	0.00	0.00	35.0
6	T1	99	46.0	99	46.0	0.152	5.3	LOS A	0.0	0.0	0.00	0.00	35.9
Approach		142	46.0	142	46.0	0.152	5.3	LOS A	0.0	0.0	0.00	0.00	35.6
North: I-75 SB Off-Ramp													
7	L2	77	49.0	77	49.0	0.257	8.2	LOS A	1.4	47.1	0.49	0.36	26.9
4	T1	0	49.0	0	49.0	0.257	8.2	LOS A	1.4	47.1	0.49	0.36	26.9
14	R2	103	49.0	103	49.0	0.257	8.2	LOS A	1.4	47.1	0.49	0.36	30.9
Approach		180	49.0	180	49.0	0.257	8.2	LOS A	1.4	47.1	0.49	0.36	29.6
West: Bellville Road													
2	T1	99	50.0	99	50.0	0.271	8.3	LOS A	1.5	53.4	0.48	0.35	28.5
12	R2	93	50.0	93	50.0	0.271	8.3	LOS A	1.5	53.4	0.48	0.35	31.9
Approach		191	50.0	191	50.0	0.271	8.3	LOS A	1.5	53.4	0.48	0.35	30.6
All Vehicles		513	48.5	513	48.5	0.271	7.4	LOS A	1.5	53.4	0.35	0.26	31.4

Level of Service (LOS) Method: Delay & v/c (HCM 2010).
Roundabout LOS Method: Same as Sign Control.
Vehicle movement LOS values are based on average delay and v/c ratio (degree of saturation) per movement
LOS F will result if v/c > 1 irrespective of movement delay value (does not apply for approaches and intersection).
Intersection and Approach LOS values are based on average delay for all movements (v/c not used as specified in HCM 2010).
Roundabout Capacity Model: SIDRA Standard.
HCM Delay Formula option is used. Control Delay does not include Geometric Delay since Exclude Geometric Delay option applies.
Gap-Acceptance Capacity: SIDRA Standard (Akçelik M3D).
HV (%) values are calculated for All Movement Classes of All Heavy Vehicle Model Designation.

Copyright © 2000-2014 Akcelik and Associates Pty Ltd
www.sidrasolutions.com

APPENDIX F – Build 2042: Unsignalized Analysis

Intersection	
Int Delay, s/veh	3.9

Movement	EBL	EBT	EBR	WBL	WBT	WBR	NBL	NBT	NBR	SBL	SBT	SBR
Lane Configurations												
Traffic Vol, veh/h	0	175	100	50	105	0	0	0	0	40	0	100
Future Vol, veh/h	0	175	100	50	105	0	0	0	0	40	0	100
Conflicting Peds, #/hr	0	0	0	0	0	0	0	0	0	0	0	0
Sign Control	Free	Free	Free	Free	Free	Free	Stop	Stop	Stop	Stop	Stop	Stop
RT Channelized	-	-	None	-	-	None	-	-	None	-	-	None
Storage Length	-	-	250	0	-	-	-	-	-	-	-	-
Veh in Median Storage, #	-	0	-	-	0	-	-	-	-	-	0	-
Grade, %	-	0	-	-	0	-	-	0	-	-	0	-
Peak Hour Factor	92	92	92	90	90	90	92	92	92	83	83	83
Heavy Vehicles, %	62	62	62	50	50	50	2	2	2	56	56	56
Mvmt Flow	0	190	109	56	117	0	0	0	0	48	0	120

Major/Minor	Major1			Major2			Minor2		
Conflicting Flow All	-	0	0	190	0	0	418	418	117
Stage 1	-	-	-	-	-	-	228	228	-
Stage 2	-	-	-	-	-	-	190	190	-
Critical Hdwy	-	-	-	4.6	-	-	6.96	7.06	6.76
Critical Hdwy Stg 1	-	-	-	-	-	-	5.96	6.06	-
Critical Hdwy Stg 2	-	-	-	-	-	-	5.96	6.06	-
Follow-up Hdwy	-	-	-	2.65	-	-	4.004	4.504	3.804
Pot Cap-1 Maneuver	0	-	-	1142	-	0	501	452	808
Stage 1	0	-	-	-	-	0	698	626	-
Stage 2	0	-	-	-	-	0	728	652	-
Platoon blocked, %		-	-		-				
Mov Cap-1 Maneuver	-	-	-	1142	-	-	476	0	808
Mov Cap-2 Maneuver	-	-	-	-	-	-	476	0	-
Stage 1	-	-	-	-	-	-	664	0	-
Stage 2	-	-	-	-	-	-	728	0	-

Approach	EB	WB	SB
HCM Control Delay, s	0	2.7	12.1
HCM LOS			B

Minor Lane/Major Mvmt	EBT	EBR	WBL	WBT	SBLn1
Capacity (veh/h)	-	-	1142	-	674
HCM Lane V/C Ratio	-	-	0.049	-	0.25
HCM Control Delay (s)	-	-	8.3	-	12.1
HCM Lane LOS	-	-	A	-	B
HCM 95th %tile Q(veh)	-	-	0.2	-	1

Intersection	
Int Delay, s/veh	5

Movement	EBL	EBT	EBR	WBL	WBT	WBR	NBL	NBT	NBR	SBL	SBT	SBR
Lane Configurations												
Traffic Vol, veh/h	115	100	0	0	90	80	65	0	65	0	0	0
Future Vol, veh/h	115	100	0	0	90	80	65	0	65	0	0	0
Conflicting Peds, #/hr	0	0	0	0	0	0	0	0	0	0	0	0
Sign Control	Free	Free	Free	Free	Free	Free	Stop	Stop	Stop	Stop	Stop	Stop
RT Channelized	-	-	None	-	-	None	-	-	None	-	-	None
Storage Length	0	-	-	-	-	250	-	-	-	-	-	-
Veh in Median Storage, #	-	0	-	-	0	-	-	0	-	-	-	-
Grade, %	-	0	-	-	0	-	-	0	-	-	0	-
Peak Hour Factor	81	81	81	73	73	73	91	91	91	92	92	92
Heavy Vehicles, %	62	62	62	50	50	50	35	35	35	2	2	2
Mvmt Flow	142	123	0	0	123	110	71	0	71	0	0	0

Major/Minor	Major1			Major2			Minor1		
Conflicting Flow All	123	0	-	-	-	0	530	530	123
Stage 1	-	-	-	-	-	-	407	407	-
Stage 2	-	-	-	-	-	-	123	123	-
Critical Hdwy	4.72	-	-	-	-	-	6.75	6.85	6.55
Critical Hdwy Stg 1	-	-	-	-	-	-	5.75	5.85	-
Critical Hdwy Stg 2	-	-	-	-	-	-	5.75	5.85	-
Follow-up Hdwy	2.758	-	-	-	-	-	3.815	4.315	3.615
Pot Cap-1 Maneuver	1164	-	0	0	-	-	457	411	846
Stage 1	-	-	0	0	-	-	606	544	-
Stage 2	-	-	0	0	-	-	827	735	-
Platoon blocked, %		-			-	-			
Mov Cap-1 Maneuver	1164	-	-	-	-	-	401	0	846
Mov Cap-2 Maneuver	-	-	-	-	-	-	401	0	-
Stage 1	-	-	-	-	-	-	532	0	-
Stage 2	-	-	-	-	-	-	827	0	-

Approach	EB	WB	NB
HCM Control Delay, s	4.6	0	14
HCM LOS			B

Minor Lane/Major Mvmt	NBLn1	EBL	EBT	WBT	WBR
Capacity (veh/h)	544	1164	-	-	-
HCM Lane V/C Ratio	0.263	0.122	-	-	-
HCM Control Delay (s)	14	8.5	-	-	-
HCM Lane LOS	B	A	-	-	-
HCM 95th %tile Q(veh)	1	0.4	-	-	-

Intersection	
Int Delay, s/veh	6.6

Movement	EBL	EBT	EBR	WBL	WBT	WBR	NBL	NBT	NBR	SBL	SBT	SBR
Lane Configurations												
Traffic Vol, veh/h	0	130	125	55	130	0	0	0	0	100	0	130
Future Vol, veh/h	0	130	125	55	130	0	0	0	0	100	0	130
Conflicting Peds, #/hr	0	0	0	0	0	0	0	0	0	0	0	0
Sign Control	Free	Free	Free	Free	Free	Free	Stop	Stop	Stop	Stop	Stop	Stop
RT Channelized	-	-	None	-	-	None	-	-	None	-	-	None
Storage Length	-	-	250	0	-	-	-	-	-	-	-	-
Veh in Median Storage, #	-	0	-	-	0	-	-	-	-	-	0	-
Grade, %	-	0	-	-	0	-	-	0	-	-	0	-
Peak Hour Factor	81	81	81	81	81	81	92	92	92	78	78	78
Heavy Vehicles, %	50	50	50	46	46	46	2	2	2	49	49	49
Mvmt Flow	0	160	154	68	160	0	0	0	0	128	0	167

Major/Minor	Major1			Major2			Minor2		
Conflicting Flow All	-	0	0	160	0	0	456	456	160
Stage 1	-	-	-	-	-	-	296	296	-
Stage 2	-	-	-	-	-	-	160	160	-
Critical Hdwy	-	-	-	4.56	-	-	6.89	6.99	6.69
Critical Hdwy Stg 1	-	-	-	-	-	-	5.89	5.99	-
Critical Hdwy Stg 2	-	-	-	-	-	-	5.89	5.99	-
Follow-up Hdwy	-	-	-	2.614	-	-	3.941	4.441	3.741
Pot Cap-1 Maneuver	0	-	-	1191	-	0	485	437	776
Stage 1	0	-	-	-	-	0	659	591	-
Stage 2	0	-	-	-	-	0	766	684	-
Platoon blocked, %		-	-		-				
Mov Cap-1 Maneuver	-	-	-	1191	-	-	457	0	776
Mov Cap-2 Maneuver	-	-	-	-	-	-	457	0	-
Stage 1	-	-	-	-	-	-	621	0	-
Stage 2	-	-	-	-	-	-	766	0	-

Approach	EB	WB	SB
HCM Control Delay, s	0	2.4	16.8
HCM LOS			C

Minor Lane/Major Mvmt	EBT	EBR	WBL	WBT	SBLn1
Capacity (veh/h)	-	-	1191	-	595
HCM Lane V/C Ratio	-	-	0.057	-	0.496
HCM Control Delay (s)	-	-	8.2	-	16.8
HCM Lane LOS	-	-	A	-	C
HCM 95th %tile Q(veh)	-	-	0.2	-	2.7

Intersection	
Int Delay, s/veh	6.8

Movement	EBL	EBT	EBR	WBL	WBT	WBR	NBL	NBT	NBR	SBL	SBT	SBR
Lane Configurations												
Traffic Vol, veh/h	100	130	0	0	105	105	80	0	115	0	0	0
Future Vol, veh/h	100	130	0	0	105	105	80	0	115	0	0	0
Conflicting Peds, #/hr	0	0	0	0	0	0	0	0	0	0	0	0
Sign Control	Free	Free	Free	Free	Free	Free	Stop	Stop	Stop	Stop	Stop	Stop
RT Channelized	-	-	None	-	-	None	-	-	None	-	-	None
Storage Length	0	-	-	-	-	250	-	-	-	-	-	-
Veh in Median Storage, #	-	0	-	-	0	-	-	0	-	-	-	-
Grade, %	-	0	-	-	0	-	-	0	-	-	0	-
Peak Hour Factor	96	96	96	96	96	96	74	74	74	92	92	92
Heavy Vehicles, %	50	50	50	46	46	46	46	46	46	2	2	2
Mvmt Flow	104	135	0	0	109	109	108	0	155	0	0	0

Major/Minor	Major1			Major2			Minor1		
Conflicting Flow All	109	0	-	-	-	0	453	453	135
Stage 1	-	-	-	-	-	-	344	344	-
Stage 2	-	-	-	-	-	-	109	109	-
Critical Hdwy	4.6	-	-	-	-	-	6.86	6.96	6.66
Critical Hdwy Stg 1	-	-	-	-	-	-	5.86	5.96	-
Critical Hdwy Stg 2	-	-	-	-	-	-	5.86	5.96	-
Follow-up Hdwy	2.65	-	-	-	-	-	3.914	4.414	3.714
Pot Cap-1 Maneuver	1230	-	0	0	-	-	491	443	809
Stage 1	-	-	0	0	-	-	630	566	-
Stage 2	-	-	0	0	-	-	817	727	-
Platoon blocked, %		-			-	-			
Mov Cap-1 Maneuver	1230	-	-	-	-	-	449	0	809
Mov Cap-2 Maneuver	-	-	-	-	-	-	449	0	-
Stage 1	-	-	-	-	-	-	577	0	-
Stage 2	-	-	-	-	-	-	817	0	-

Approach	EB	WB	NB
HCM Control Delay, s	3.6	0	15.3
HCM LOS			C

Minor Lane/Major Mvmt	NBLn1	EBL	EBT	WBT	WBR
Capacity (veh/h)	609	1230	-	-	-
HCM Lane V/C Ratio	0.433	0.085	-	-	-
HCM Control Delay (s)	15.3	8.2	-	-	-
HCM Lane LOS	C	A	-	-	-
HCM 95th %tile Q(veh)	2.2	0.3	-	-	-

APPENDIX G – Build 2042: Signalized Analysis

Lane Group	EBT	EBR	WBL	WBT	SBT
Lane Configurations					
Traffic Volume (vph)	175	100	50	105	0
Future Volume (vph)	175	100	50	105	0
Turn Type	NA	Perm	Perm	NA	NA
Protected Phases	2			6	4
Permitted Phases		2	6		
Detector Phase	2	2	6	6	4
Switch Phase					
Minimum Initial (s)	5.0	5.0	5.0	5.0	5.0
Minimum Split (s)	23.5	23.5	23.5	23.5	27.5
Total Split (s)	54.0	54.0	54.0	54.0	46.0
Total Split (%)	54.0%	54.0%	54.0%	54.0%	46.0%
Yellow Time (s)	3.5	3.5	3.5	3.5	3.5
All-Red Time (s)	2.0	2.0	2.0	2.0	2.0
Lost Time Adjust (s)	0.0	0.0	0.0	0.0	0.0
Total Lost Time (s)	5.5	5.5	5.5	5.5	5.5
Lead/Lag					
Lead-Lag Optimize?					
Recall Mode	Min	Min	Min	Min	Min

Intersection Summary
Cycle Length: 100
Actuated Cycle Length: 29.9
Natural Cycle: 55
Control Type: Actuated-Uncoordinated

Splits and Phases: 1: I-75 SB Ramps & Bellville Road

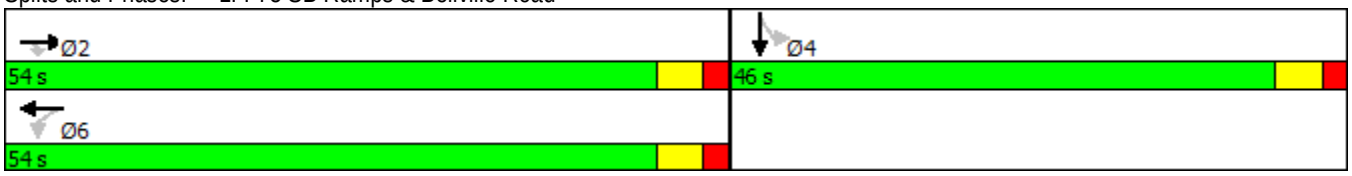

Movement	EBL	EBT	EBR	WBL	WBT	WBR	NBL	NBT	NBR	SBL	SBT	SBR
Lane Configurations												
Traffic Volume (veh/h)	0	175	100	50	105	0	0	0	0	40	0	100
Future Volume (veh/h)	0	175	100	50	105	0	0	0	0	40	0	100
Number	5	2	12	1	6	16				7	4	14
Initial Q (Qb), veh	0	0	0	0	0	0				0	0	0
Ped-Bike Adj(A_pbT)	1.00		1.00	1.00		1.00				1.00		1.00
Parking Bus, Adj	1.00	1.00	1.00	1.00	1.00	1.00				1.00	1.00	1.00
Adj Sat Flow, veh/h/ln	0	1173	1173	1267	1267	0				1900	1218	1900
Adj Flow Rate, veh/h	0	190	109	56	117	0				48	0	120
Adj No. of Lanes	0	1	1	1	1	0				0	1	0
Peak Hour Factor	0.92	0.92	0.92	0.90	0.90	0.90				0.83	0.83	0.83
Percent Heavy Veh, %	0	62	62	50	50	0				0	56	0
Cap, veh/h	0	505	429	459	546	0				69	0	173
Arrive On Green	0.00	0.43	0.43	0.43	0.43	0.00				0.23	0.00	0.23
Sat Flow, veh/h	0	1173	997	732	1267	0				305	0	763
Grp Volume(v), veh/h	0	190	109	56	117	0				168	0	0
Grp Sat Flow(s),veh/h/ln	0	1173	997	732	1267	0				1068	0	0
Q Serve(g_s), s	0.0	3.5	2.2	1.8	1.9	0.0				4.6	0.0	0.0
Cycle Q Clear(g_c), s	0.0	3.5	2.2	5.3	1.9	0.0				4.6	0.0	0.0
Prop In Lane	0.00		1.00	1.00		0.00				0.29		0.71
Lane Grp Cap(c), veh/h	0	505	429	459	546	0				242	0	0
V/C Ratio(X)	0.00	0.38	0.25	0.12	0.21	0.00				0.69	0.00	0.00
Avail Cap(c_a), veh/h	0	1773	1507	1250	1915	0				1349	0	0
HCM Platoon Ratio	1.00	1.00	1.00	1.00	1.00	1.00				1.00	1.00	1.00
Upstream Filter(I)	0.00	1.00	1.00	1.00	1.00	0.00				1.00	0.00	0.00
Uniform Delay (d), s/veh	0.0	6.2	5.8	8.0	5.7	0.0				11.4	0.0	0.0
Incr Delay (d2), s/veh	0.0	0.5	0.3	0.1	0.2	0.0				3.6	0.0	0.0
Initial Q Delay(d3),s/veh	0.0	0.0	0.0	0.0	0.0	0.0				0.0	0.0	0.0
%ile BackOfQ(95%),veh/ln	0.0	2.1	1.2	0.7	1.2	0.0				2.9	0.0	0.0
LnGrp Delay(d),s/veh	0.0	6.7	6.1	8.1	5.9	0.0				15.0	0.0	0.0
LnGrp LOS		A	A	A	A					B		
Approach Vol, veh/h		299			173						168	
Approach Delay, s/veh		6.5			6.6						15.0	
Approach LOS		A			A						B	

Timer	1	2	3	4	5	6	7	8
Assigned Phs		2		4		6		
Phs Duration (G+Y+Rc), s		19.3		12.8		19.3		
Change Period (Y+Rc), s		5.5		5.5		5.5		
Max Green Setting (Gmax), s		48.5		40.5		48.5		
Max Q Clear Time (g_c+I1), s		5.5		6.6		7.3		
Green Ext Time (p_c), s		6.5		0.6		6.5		

Intersection Summary	
HCM 2010 Ctrl Delay	8.7
HCM 2010 LOS	A

Lane Group	EBL	EBT	WBT	WBR	NBT
Lane Configurations					
Traffic Volume (vph)	115	100	90	80	0
Future Volume (vph)	115	100	90	80	0
Turn Type	Perm	NA	NA	Perm	NA
Protected Phases		2	6		8
Permitted Phases	2			6	
Detector Phase	2	2	6	6	8
Switch Phase					
Minimum Initial (s)	5.0	5.0	5.0	5.0	5.0
Minimum Split (s)	23.5	23.5	23.5	23.5	27.5
Total Split (s)	61.0	61.0	61.0	61.0	39.0
Total Split (%)	61.0%	61.0%	61.0%	61.0%	39.0%
Yellow Time (s)	3.5	3.5	3.5	3.5	3.5
All-Red Time (s)	2.0	2.0	2.0	2.0	2.0
Lost Time Adjust (s)	0.0	0.0	0.0	0.0	0.0
Total Lost Time (s)	5.5	5.5	5.5	5.5	5.5
Lead/Lag					
Lead-Lag Optimize?					
Recall Mode	Min	Min	Min	Min	Min

Intersection Summary
Cycle Length: 100
Actuated Cycle Length: 31.4
Natural Cycle: 55
Control Type: Actuated-Uncoordinated

Splits and Phases: 2: I-75 NB Ramps & Bellville Road

Movement	EBL	EBT	EBR	WBL	WBT	WBR	NBL	NBT	NBR	SBL	SBT	SBR
Lane Configurations												
Traffic Volume (veh/h)	115	100	0	0	90	80	65	0	65	0	0	0
Future Volume (veh/h)	115	100	0	0	90	80	65	0	65	0	0	0
Number	5	2	12	1	6	16	3	8	18			
Initial Q (Qb), veh	0	0	0	0	0	0	0	0	0			
Ped-Bike Adj(A_pbT)	1.00		1.00	1.00		1.00	1.00		1.00			
Parking Bus, Adj	1.00	1.00	1.00	1.00	1.00	1.00	1.00	1.00	1.00			
Adj Sat Flow, veh/h/ln	1173	1173	0	0	1267	1267	1900	1407	1900			
Adj Flow Rate, veh/h	142	123	0	0	123	110	71	0	71			
Adj No. of Lanes	1	1	0	0	1	1	0	1	0			
Peak Hour Factor	0.81	0.81	0.81	0.73	0.73	0.73	0.91	0.91	0.91			
Percent Heavy Veh, %	62	62	0	0	50	50	0	35	0			
Cap, veh/h	525	548	0	0	592	503	115	0	115			
Arrive On Green	0.47	0.47	0.00	0.00	0.47	0.47	0.18	0.00	0.18			
Sat Flow, veh/h	719	1173	0	0	1267	1077	632	0	632			
Grp Volume(v), veh/h	142	123	0	0	123	110	142	0	0			
Grp Sat Flow(s),veh/h/ln	719	1173	0	0	1267	1077	1264	0	0			
Q Serve(g_s), s	4.6	2.0	0.0	0.0	1.8	1.9	3.2	0.0	0.0			
Cycle Q Clear(g_c), s	6.4	2.0	0.0	0.0	1.8	1.9	3.2	0.0	0.0			
Prop In Lane	1.00		0.00	0.00		1.00	0.50		0.50			
Lane Grp Cap(c), veh/h	525	548	0	0	592	503	230	0	0			
V/C Ratio(X)	0.27	0.22	0.00	0.00	0.21	0.22	0.62	0.00	0.00			
Avail Cap(c_a), veh/h	1460	2073	0	0	2239	1903	1349	0	0			
HCM Platoon Ratio	1.00	1.00	1.00	1.00	1.00	1.00	1.00	1.00	1.00			
Upstream Filter(I)	1.00	1.00	0.00	0.00	1.00	1.00	1.00	0.00	0.00			
Uniform Delay (d), s/veh	6.8	5.0	0.0	0.0	4.9	5.0	11.8	0.0	0.0			
Incr Delay (d2), s/veh	0.3	0.2	0.0	0.0	0.2	0.2	2.7	0.0	0.0			
Initial Q Delay(d3),s/veh	0.0	0.0	0.0	0.0	0.0	0.0	0.0	0.0	0.0			
%ile BackOfQ(95%),veh/ln	1.6	1.2	0.0	0.0	1.2	1.0	2.3	0.0	0.0			
LnGrp Delay(d),s/veh	7.1	5.2	0.0	0.0	5.1	5.2	14.5	0.0	0.0			
LnGrp LOS	A	A			A	A	B					
Approach Vol, veh/h		265			233			142				
Approach Delay, s/veh		6.2			5.1			14.5				
Approach LOS		A			A			B				

Timer	1	2	3	4	5	6	7	8
Assigned Phs		2				6		8
Phs Duration (G+Y+Rc), s		20.2				20.2		11.2
Change Period (Y+Rc), s		5.5				5.5		5.5
Max Green Setting (Gmax), s		55.5				55.5		33.5
Max Q Clear Time (g_c+I1), s		8.4				3.9		5.2
Green Ext Time (p_c), s		6.3				6.4		0.5

Intersection Summary	
HCM 2010 Ctrl Delay	7.7
HCM 2010 LOS	A

Lane Group	EBT	EBR	WBL	WBT	SBT
Lane Configurations					
Traffic Volume (vph)	130	125	55	130	0
Future Volume (vph)	130	125	55	130	0
Turn Type	NA	Perm	Perm	NA	NA
Protected Phases	2			6	4
Permitted Phases		2	6		
Detector Phase	2	2	6	6	4
Switch Phase					
Minimum Initial (s)	5.0	5.0	5.0	5.0	5.0
Minimum Split (s)	23.5	23.5	23.5	23.5	27.5
Total Split (s)	43.0	43.0	43.0	43.0	57.0
Total Split (%)	43.0%	43.0%	43.0%	43.0%	57.0%
Yellow Time (s)	3.5	3.5	3.5	3.5	3.5
All-Red Time (s)	2.0	2.0	2.0	2.0	2.0
Lost Time Adjust (s)	0.0	0.0	0.0	0.0	0.0
Total Lost Time (s)	5.5	5.5	5.5	5.5	5.5
Lead/Lag					
Lead-Lag Optimize?					
Recall Mode	Min	Min	Min	Min	Min

Intersection Summary
Cycle Length: 100
Actuated Cycle Length: 36
Natural Cycle: 55
Control Type: Actuated-Uncoordinated

Splits and Phases: 1: I-75 SB Ramps & Bellville Road

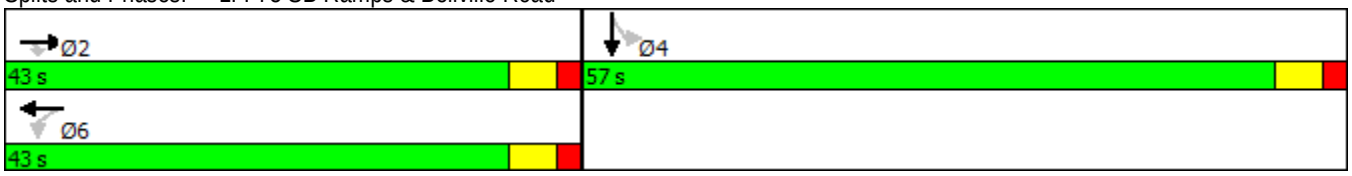

Movement	EBL	EBT	EBR	WBL	WBT	WBR	NBL	NBT	NBR	SBL	SBT	SBR
Lane Configurations												
Traffic Volume (veh/h)	0	130	125	55	130	0	0	0	0	100	0	130
Future Volume (veh/h)	0	130	125	55	130	0	0	0	0	100	0	130
Number	5	2	12	1	6	16				7	4	14
Initial Q (Qb), veh	0	0	0	0	0	0				0	0	0
Ped-Bike Adj(A_pbT)	1.00		1.00	1.00		1.00				1.00		1.00
Parking Bus, Adj	1.00	1.00	1.00	1.00	1.00	1.00				1.00	1.00	1.00
Adj Sat Flow, veh/h/ln	0	1267	1267	1301	1301	0				1900	1275	1900
Adj Flow Rate, veh/h	0	160	154	68	160	0				128	0	167
Adj No. of Lanes	0	1	1	1	1	0				0	1	0
Peak Hour Factor	0.81	0.81	0.81	0.81	0.81	0.81				0.78	0.78	0.78
Percent Heavy Veh, %	0	50	50	46	46	0				0	49	0
Cap, veh/h	0	486	413	411	499	0				159	0	207
Arrive On Green	0.00	0.38	0.38	0.38	0.38	0.00				0.32	0.00	0.32
Sat Flow, veh/h	0	1267	1077	741	1301	0				493	0	644
Grp Volume(v), veh/h	0	160	154	68	160	0				295	0	0
Grp Sat Flow(s),veh/h/ln	0	1267	1077	741	1301	0				1137	0	0
Q Serve(g_s), s	0.0	3.3	3.8	2.7	3.2	0.0				8.9	0.0	0.0
Cycle Q Clear(g_c), s	0.0	3.3	3.8	6.0	3.2	0.0				8.9	0.0	0.0
Prop In Lane	0.00		1.00	1.00		0.00				0.43		0.57
Lane Grp Cap(c), veh/h	0	486	413	411	499	0				366	0	0
V/C Ratio(X)	0.00	0.33	0.37	0.17	0.32	0.00				0.81	0.00	0.00
Avail Cap(c_a), veh/h	0	1270	1080	870	1305	0				1565	0	0
HCM Platoon Ratio	1.00	1.00	1.00	1.00	1.00	1.00				1.00	1.00	1.00
Upstream Filter(I)	0.00	1.00	1.00	1.00	1.00	0.00				1.00	0.00	0.00
Uniform Delay (d), s/veh	0.0	8.1	8.3	10.2	8.1	0.0				11.6	0.0	0.0
Incr Delay (d2), s/veh	0.0	0.4	0.6	0.2	0.4	0.0				4.2	0.0	0.0
Initial Q Delay(d3),s/veh	0.0	0.0	0.0	0.0	0.0	0.0				0.0	0.0	0.0
%ile BackOfQ(95%),veh/ln	0.0	2.2	2.1	1.0	2.2	0.0				5.6	0.0	0.0
LnGrp Delay(d),s/veh	0.0	8.5	8.9	10.4	8.5	0.0				15.8	0.0	0.0
LnGrp LOS		A	A	B	A					B		
Approach Vol, veh/h		314			228						295	
Approach Delay, s/veh		8.7			9.1						15.8	
Approach LOS		A			A						B	

Timer	1	2	3	4	5	6	7	8
Assigned Phs		2		4		6		
Phs Duration (G+Y+Rc), s		19.8		17.6		19.8		
Change Period (Y+Rc), s		5.5		5.5		5.5		
Max Green Setting (Gmax), s		37.5		51.5		37.5		
Max Q Clear Time (g_c+I1), s		5.8		10.9		8.0		
Green Ext Time (p_c), s		6.5		1.2		6.3		

Intersection Summary	
HCM 2010 Ctrl Delay	11.3
HCM 2010 LOS	B

Lane Group	EBL	EBT	WBT	WBR	NBT
Lane Configurations					
Traffic Volume (vph)	100	130	105	105	0
Future Volume (vph)	100	130	105	105	0
Turn Type	Perm	NA	NA	Perm	NA
Protected Phases		2	6		8
Permitted Phases	2			6	
Detector Phase	2	2	6	6	8
Switch Phase					
Minimum Initial (s)	5.0	5.0	5.0	5.0	5.0
Minimum Split (s)	23.5	23.5	23.5	23.5	27.5
Total Split (s)	45.0	45.0	45.0	45.0	55.0
Total Split (%)	45.0%	45.0%	45.0%	45.0%	55.0%
Yellow Time (s)	3.5	3.5	3.5	3.5	3.5
All-Red Time (s)	2.0	2.0	2.0	2.0	2.0
Lost Time Adjust (s)	0.0	0.0	0.0	0.0	0.0
Total Lost Time (s)	5.5	5.5	5.5	5.5	5.5
Lead/Lag					
Lead-Lag Optimize?					
Recall Mode	Min	Min	Min	Min	Min

Intersection Summary
Cycle Length: 100
Actuated Cycle Length: 32.8
Natural Cycle: 55
Control Type: Actuated-Uncoordinated

Splits and Phases: 2: I-75 NB Ramps & Bellville Road

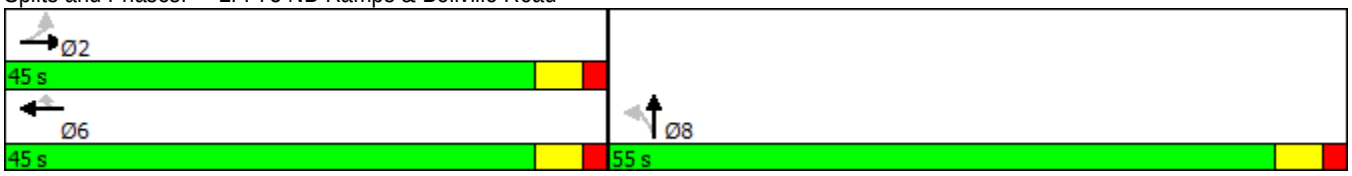

Movement	EBL	EBT	EBR	WBL	WBT	WBR	NBL	NBT	NBR	SBL	SBT	SBR
Lane Configurations												
Traffic Volume (veh/h)	100	130	0	0	105	105	80	0	115	0	0	0
Future Volume (veh/h)	100	130	0	0	105	105	80	0	115	0	0	0
Number	5	2	12	1	6	16	3	8	18			
Initial Q (Qb), veh	0	0	0	0	0	0	0	0	0			
Ped-Bike Adj(A_pbT)	1.00		1.00	1.00		1.00	1.00		1.00			
Parking Bus, Adj	1.00	1.00	1.00	1.00	1.00	1.00	1.00	1.00	1.00			
Adj Sat Flow, veh/h/ln	1267	1267	0	0	1301	1301	1900	1301	1900			
Adj Flow Rate, veh/h	104	135	0	0	109	109	108	0	155			
Adj No. of Lanes	1	1	0	0	1	1	0	1	0			
Peak Hour Factor	0.96	0.96	0.96	0.96	0.96	0.96	0.74	0.74	0.74			
Percent Heavy Veh, %	50	50	0	0	46	46	0	46	0			
Cap, veh/h	465	476	0	0	489	416	141	0	202			
Arrive On Green	0.38	0.38	0.00	0.00	0.38	0.38	0.30	0.00	0.30			
Sat Flow, veh/h	788	1267	0	0	1301	1106	475	0	682			
Grp Volume(v), veh/h	104	135	0	0	109	109	263	0	0			
Grp Sat Flow(s),veh/h/ln	788	1267	0	0	1301	1106	1157	0	0			
Q Serve(g_s), s	3.5	2.5	0.0	0.0	1.9	2.3	6.9	0.0	0.0			
Cycle Q Clear(g_c), s	5.4	2.5	0.0	0.0	1.9	2.3	6.9	0.0	0.0			
Prop In Lane	1.00		0.00	0.00		1.00	0.41		0.59			
Lane Grp Cap(c), veh/h	465	476	0	0	489	416	344	0	0			
V/C Ratio(X)	0.22	0.28	0.00	0.00	0.22	0.26	0.77	0.00	0.00			
Avail Cap(c_a), veh/h	1095	1489	0	0	1530	1300	1705	0	0			
HCM Platoon Ratio	1.00	1.00	1.00	1.00	1.00	1.00	1.00	1.00	1.00			
Upstream Filter(I)	1.00	1.00	0.00	0.00	1.00	1.00	1.00	0.00	0.00			
Uniform Delay (d), s/veh	9.0	7.3	0.0	0.0	7.1	7.3	10.7	0.0	0.0			
Incr Delay (d2), s/veh	0.2	0.3	0.0	0.0	0.2	0.3	3.6	0.0	0.0			
Initial Q Delay(d3),s/veh	0.0	0.0	0.0	0.0	0.0	0.0	0.0	0.0	0.0			
%ile BackOfQ(95%),veh/ln	1.4	1.6	0.0	0.0	1.3	1.3	4.6	0.0	0.0			
LnGrp Delay(d),s/veh	9.2	7.7	0.0	0.0	7.4	7.6	14.3	0.0	0.0			
LnGrp LOS	A	A			A	A	B					
Approach Vol, veh/h		239			218			263				
Approach Delay, s/veh		8.3			7.5			14.3				
Approach LOS		A			A			B				

Timer	1	2	3	4	5	6	7	8
Assigned Phs		2				6		8
Phs Duration (G+Y+Rc), s		18.1				18.1		15.5
Change Period (Y+Rc), s		5.5				5.5		5.5
Max Green Setting (Gmax), s		39.5				39.5		49.5
Max Q Clear Time (g_c+I1), s		7.4				4.3		8.9
Green Ext Time (p_c), s		5.2				5.3		1.0

Intersection Summary	
HCM 2010 Ctrl Delay	10.3
HCM 2010 LOS	B

APPENDIX H – Build 2042: GDOT Roundabout Analysis

General & Site Information

v 4.0

Analyst:	GKW
Agency/Co:	Jacobs
Date:	5/16/2017
Project or PI#:	CB506050
Year, Peak Hour:	2042 AM
County/District:	Lowndes
Intersection Name:	Bellville Road SB Ramps

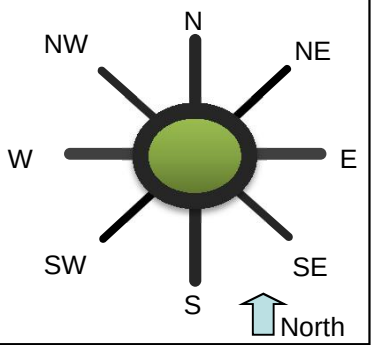

Volumes		Entry Legs (FROM)							
		N (1)	NE (2)	E (3)	SE (4)	S (5)	SW (6)	W (7)	NW (8)
Exit Legs (TO)	N (1), vph			0		0		0	
	NE (2), vph								
	E (3), vph	40				0		175	
	SE (4), vph								
	S (5), vph	0		50				100	
	SW (6), vph								
	W (7), vph	100		105		0			
	NW (8), vph								
Output	Total Vehicles	140	0	155	0	0	0	275	0

Volume Characteristics	N	NE	E	SE	S	SW	W	NW
% Cars	44.0%	100.0%	50.0%	100.0%	100.0%	100.0%	38.0%	100.0%
% Heavy Vehicles	56.0%	0.0%	50.0%	0.0%	0.0%	0.0%	62.0%	0.0%
% Bicycle	0.0%	0.0%	0.0%	0.0%	0.0%	0.0%	0.0%	0.0%
# of Pedestrians (ped/hr)	0	0	0	0	0	0	0	0
PHF	*0.83*	*0.95*	*0.90*	*0.95*	*0.95*	*0.95*	*0.92*	*0.95*
F_{HV}	0.641	1.000	0.667	1.000	1.000	1.000	0.617	1.000
F_{ped}	1.000	1.000	1.000	1.000	1.000	1.000	1.000	1.000

Entry/Conflicting Flows	N	NE	E	SE	S	SW	W	NW
Flow to Leg # N (1), pcu/h	0	0	0	0	0	0	0	0
NE (2), pcu/h	0	0	0	0	0	0	0	0
E (3), pcu/h	75	0	0	0	0	0	308	0
SE (4), pcu/h	0	0	0	0	0	0	0	0
S (5), pcu/h	0	0	83	0	0	0	176	0
SW (6), pcu/h	0	0	0	0	0	0	0	0
W (7), pcu/h	188	0	175	0	0	0	0	0
NW (8), pcu/h	0	0	0	0	0	0	0	0
Entry flow, pcu/h	263	0	258	0	0	0	484	0
Conflicting flow, pcu/h	258	0	0	0	0	0	159	0

Results: Approach Measures of Effectiveness

HCM 6th Edition	N	NE	E	SE	S	SW	W	NW
Entry Capacity, vph	680	NA	920	NA	1380	NA	725	NA
Entry Flow Rates, vph	169	NA	172	NA	0	NA	299	NA
V/C ratio	0.25		0.19		0.00		0.41	
Control Delay, sec/pcu	8		6		3		10	
LOS	A		A		A		B	
95th % Queue (ft)	38		26		0		82	

Notes:

v 4.0

Unit Legend:
vph = vehicles per hour
PHF = peak hour factor
F_{HV} = heavy vehicle factor
pcu = passenger car unit

Bypass Lane Merge Point Analysis (if applicable)

General & Site Information

v 4.0

Analyst:	GKW
Agency/Co:	Jacobs
Date:	5/16/2017
Project or PI#:	CB506050
Year, Peak Hour:	2042 PM
County/District:	Lowndes
Intersection Name:	Bellville Road SB Ramps

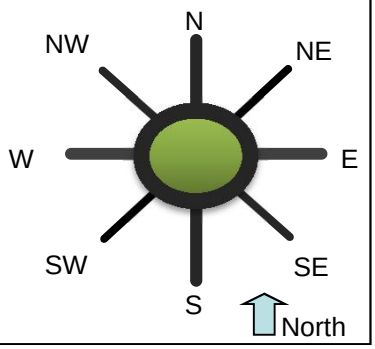

Volumes		Entry Legs (FROM)							
		N (1)	NE (2)	E (3)	SE (4)	S (5)	SW (6)	W (7)	NW (8)
Exit Legs (TO)	N (1), vph			0		0		0	
	NE (2), vph								
	E (3), vph	100				0		130	
	SE (4), vph								
	S (5), vph	0		55				125	
	SW (6), vph								
	W (7), vph	130		130		0			
	NW (8), vph								
Output	Total Vehicles	230	0	185	0	0	0	255	0

Volume Characteristics	N	NE	E	SE	S	SW	W	NW
% Cars	51.0%	100.0%	54.0%	100.0%	100.0%	100.0%	50.0%	100.0%
% Heavy Vehicles	49.0%	0.0%	46.0%	0.0%	0.0%	0.0%	50.0%	0.0%
% Bicycle	0.0%	0.0%	0.0%	0.0%	0.0%	0.0%	0.0%	0.0%
# of Pedestrians (ped/hr)	0	0	0	0	0	0	0	0
PHF	*0.78*	*0.95*	*0.81*	*0.95*	*0.95*	*0.95*	*0.81*	*0.95*
F_{HV}	0.671	1.000	0.685	1.000	1.000	1.000	0.667	1.000
F_{ped}	1.000	1.000	1.000	1.000	1.000	1.000	1.000	1.000

Entry/Conflicting Flows	N	NE	E	SE	S	SW	W	NW
Flow to Leg # N (1), pcu/h	0	0	0	0	0	0	0	0
NE (2), pcu/h	0	0	0	0	0	0	0	0
E (3), pcu/h	191	0	0	0	0	0	241	0
SE (4), pcu/h	0	0	0	0	0	0	0	0
S (5), pcu/h	0	0	99	0	0	0	231	0
SW (6), pcu/h	0	0	0	0	0	0	0	0
W (7), pcu/h	248	0	234	0	0	0	0	0
NW (8), pcu/h	0	0	0	0	0	0	0	0
Entry flow, pcu/h	439	0	333	0	0	0	472	0
Conflicting flow, pcu/h	333	0	0	0	0	0	290	0

Results: Approach Measures of Effectiveness

HCM 6th Edition	N	NE	E	SE	S	SW	W	NW
Entry Capacity, vph	659	NA	945	NA	1380	NA	684	NA
Entry Flow Rates, vph	295	NA	228	NA	0	NA	315	NA
V/C ratio	0.45		0.24		0.00		0.46	
Control Delay, sec/pcu	12		6		3		12	
LOS	B		A		A		B	
95th % Queue (ft)	86		35		0		91	

Notes:

v 4.0

Unit Legend:
vph = vehicles per hour
PHF = peak hour factor
F_{HV} = heavy vehicle factor
pcu = passenger car unit

Bypass Lane Merge Point Analysis (if applicable)

General & Site Information

v 4.0

Analyst:	GKW
Agency/Co:	Jacobs
Date:	5/16/2017
Project or PI#:	CB506050
Year, Peak Hour:	2042 AM
County/District:	Lowndes
Intersection Name:	Bellville Road NB Ramps

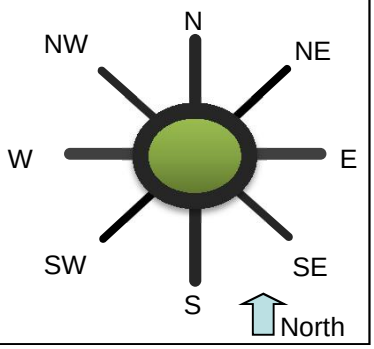

Volumes		Entry Legs (FROM)							
		N (1)	NE (2)	E (3)	SE (4)	S (5)	SW (6)	W (7)	NW (8)
Exit Legs (TO)	N (1), vph			80		0		115	
	NE (2), vph								
	E (3), vph	0				65		100	
	SE (4), vph								
	S (5), vph	0		0				0	
	SW (6), vph								
	W (7), vph	0		90		65			
	NW (8), vph								
Output	Total Vehicles	0	0	170	0	130	0	215	0

Volume Characteristics	N	NE	E	SE	S	SW	W	NW
% Cars	100.0%	100.0%	50.0%	100.0%	65.0%	100.0%	38.0%	100.0%
% Heavy Vehicles	0.0%	0.0%	50.0%	0.0%	35.0%	0.0%	62.0%	0.0%
% Bicycle	0.0%	0.0%	0.0%	0.0%	0.0%	0.0%	0.0%	0.0%
# of Pedestrians (ped/hr)	0	0	0	0	0	0	0	0
PHF	*0.95*	*0.95*	*0.73*	*0.95*	*0.91*	*0.95*	*0.81*	*0.95*
F_{HV}	1.000	1.000	0.667	1.000	0.741	1.000	0.617	1.000
F_{ped}	1.000	1.000	1.000	1.000	1.000	1.000	1.000	1.000

Entry/Conflicting Flows	N	NE	E	SE	S	SW	W	NW
Flow to Leg # N (1), pcu/h	0	0	164	0	0	0	230	0
NE (2), pcu/h	0	0	0	0	0	0	0	0
E (3), pcu/h	0	0	0	0	96	0	200	0
SE (4), pcu/h	0	0	0	0	0	0	0	0
S (5), pcu/h	0	0	0	0	0	0	0	0
SW (6), pcu/h	0	0	0	0	0	0	0	0
W (7), pcu/h	0	0	185	0	96	0	0	0
NW (8), pcu/h	0	0	0	0	0	0	0	0
Entry flow, pcu/h	0	0	349	0	193	0	430	0
Conflicting flow, pcu/h	0	0	326	0	430	0	0	0

Results: Approach Measures of Effectiveness

HCM 6th Edition	N	NE	E	SE	S	SW	W	NW
Entry Capacity, vph	1380	NA	659	NA	659	NA	852	NA
Entry Flow Rates, vph	0	NA	233	NA	143	NA	265	NA
V/C ratio	0.00		0.35		0.22		0.31	
Control Delay, sec/pcu	3		10		8		8	
LOS	A		B		A		A	
95th % Queue (ft)	0		60		28		54	

Notes:

v 4.0

Unit Legend:
vph = vehicles per hour
PHF = peak hour factor
F_{HV} = heavy vehicle factor
pcu = passenger car unit

Bypass Lane Merge Point Analysis (if applicable)

General & Site Information

v 4.0

Analyst:	GKW
Agency/Co:	Jacobs
Date:	5/16/2017
Project or PI#:	CB506050
Year, Peak Hour:	2042 PM
County/District:	Lowndes
Intersection Name:	Bellville Road NB Ramps

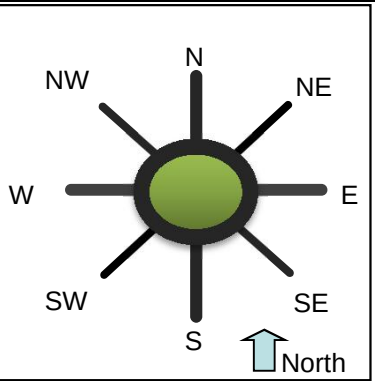

Volumes		Entry Legs (FROM)							
		N (1)	NE (2)	E (3)	SE (4)	S (5)	SW (6)	W (7)	NW (8)
Exit Legs (TO)	N (1), vph			105		0		100	
	NE (2), vph								
	E (3), vph	0				118		130	
	SE (4), vph								
	S (5), vph	0		0				0	
	SW (6), vph								
	W (7), vph	0		105		80			
	NW (8), vph								
Output	Total Vehicles	0	0	210	0	198	0	230	0

Volume Characteristics	N	NE	E	SE	S	SW	W	NW
% Cars	100.0%	100.0%	54.0%	100.0%	54.0%	100.0%	50.0%	100.0%
% Heavy Vehicles	0.0%	0.0%	46.0%	0.0%	46.0%	0.0%	50.0%	0.0%
% Bicycle	0.0%	0.0%	0.0%	0.0%	0.0%	0.0%	0.0%	0.0%
# of Pedestrians (ped/hr)	0	0	0	0	0	0	0	0
PHF	*0.95*	*0.95*	*0.96*	*0.95*	*0.74*	*0.95*	*0.96*	*0.95*
F_{HV}	1.000	1.000	0.685	1.000	0.685	1.000	0.667	1.000
F_{ped}	1.000	1.000	1.000	1.000	1.000	1.000	1.000	1.000

Entry/Conflicting Flows	N	NE	E	SE	S	SW	W	NW
Flow to Leg # N (1), pcu/h	0	0	160	0	0	0	156	0
NE (2), pcu/h	0	0	0	0	0	0	0	0
E (3), pcu/h	0	0	0	0	233	0	203	0
SE (4), pcu/h	0	0	0	0	0	0	0	0
S (5), pcu/h	0	0	0	0	0	0	0	0
SW (6), pcu/h	0	0	0	0	0	0	0	0
W (7), pcu/h	0	0	160	0	158	0	0	0
NW (8), pcu/h	0	0	0	0	0	0	0	0
Entry flow, pcu/h	0	0	319	0	391	0	359	0
Conflicting flow, pcu/h	0	0	314	0	359	0	0	0

Results: Approach Measures of Effectiveness

HCM 6th Edition	N	NE	E	SE	S	SW	W	NW
Entry Capacity, vph	1380	NA	686	NA	655	NA	920	NA
Entry Flow Rates, vph	0	NA	219	NA	268	NA	240	NA
V/C ratio	0.00		0.32		0.41		0.26	
Control Delay, sec/pcu	3		9		11		7	
LOS	A		A		B		A	
95th % Queue (ft)	0		50		73		39	

Notes:

v 4.0

Unit Legend:
vph = vehicles per hour
PHF = peak hour factor
F_{HV} = heavy vehicle factor
pcu = passenger car unit

Bypass Lane Merge Point Analysis (if applicable)

APPENDIX H – Build 2042: SIDRA Roundabout Analysis

MOVEMENT SUMMARY

Site: Bellville Road at NB Ramps (2042 AM)

Network: Network1

Bellville Road at NB Ramps
Roundabout

Movement Performance - Vehicles

Mov ID	OD Mov	Demand Flows Total veh/h	Demand Flows HV %	Arrival Flows Total veh/h	Arrival Flows HV %	Deg. Satn v/c	Average Delay sec	Level of Service	95% Back of Queue Vehicles veh	95% Back of Queue Distance ft	Prop. Queued	Effective Stop Rate per veh	Average Speed mph
South: I-75 NB Off-Ramp													
3	L2	71	35.0	71	35.0	0.223	8.3	LOS A	1.1	36.0	0.60	0.53	26.6
8	T1	0	35.0	0	35.0	0.223	8.3	LOS A	1.1	36.0	0.60	0.53	32.1
18	R2	71	35.0	71	35.0	0.223	8.3	LOS A	1.1	36.0	0.60	0.53	30.9
Approach		143	35.0	143	35.0	0.223	8.3	LOS A	1.1	36.0	0.60	0.53	29.3
East: Bellville Road													
6	T1	123	50.0	123	50.0	0.387	11.7	LOS B	2.2	78.0	0.65	0.58	26.3
16	R2	110	50.0	110	50.0	0.387	11.7	LOS B	2.2	78.0	0.65	0.58	30.5
Approach		233	50.0	233	50.0	0.387	11.7	LOS B	2.2	78.0	0.65	0.58	28.8
West: Bellville Road													
5	L2	142	62.0	142	62.0	0.316	7.8	LOS A	0.0	0.0	0.00	0.00	33.3
2	T1	123	62.0	123	62.0	0.316	7.8	LOS A	0.0	0.0	0.00	0.00	34.5
Approach		265	62.0	265	62.0	0.316	7.8	LOS A	0.0	0.0	0.00	0.00	33.9
All Vehicles		641	51.6	641	51.6	0.387	9.3	LOS A	2.2	78.0	0.37	0.33	30.8

Level of Service (LOS) Method: Delay & v/c (HCM 2010).
Roundabout LOS Method: Same as Sign Control.
Vehicle movement LOS values are based on average delay and v/c ratio (degree of saturation) per movement
LOS F will result if v/c > 1 irrespective of movement delay value (does not apply for approaches and intersection).
Intersection and Approach LOS values are based on average delay for all movements (v/c not used as specified in HCM 2010).
Roundabout Capacity Model: SIDRA Standard.
HCM Delay Formula option is used. Control Delay does not include Geometric Delay since Exclude Geometric Delay option applies.
Gap-Acceptance Capacity: SIDRA Standard (Akçelik M3D).
HV (%) values are calculated for All Movement Classes of All Heavy Vehicle Model Designation.

Copyright © 2000-2014 Akcelik and Associates Pty Ltd
www.sidrasolutions.com

SIDRA INTERSECTION 6

MOVEMENT SUMMARY

Site: Bellville Road at SB Ramps (2042 AM)

Network: Network1

Bellville Road at SB Ramps
Roundabout

Movement Performance - Vehicles													
Mov ID	OD Mov	Demand Flows Total veh/h	HV %	Arrival Flows Total veh/h	HV %	Deg. Satn v/c	Average Delay sec	Level of Service	95% Back of Queue Vehicles veh	Distance ft	Prop. Queued	Effective Stop Rate per veh	Average Speed mph
East: Bellville Road													
1	L2	56	50.0	56	50.0	0.190	5.8	LOS A	0.0	0.0	0.00	0.00	34.7
6	T1	117	50.0	117	50.0	0.190	5.8	LOS A	0.0	0.0	0.00	0.00	35.7
Approach		172	50.0	172	50.0	0.190	5.8	LOS A	0.0	0.0	0.00	0.00	35.4
North: I-75 SB Off-Ramp													
7	L2	48	56.0	48	56.0	0.271	9.3	LOS A	1.4	51.2	0.54	0.45	26.6
4	T1	0	56.0	0	56.0	0.271	9.3	LOS A	1.4	51.2	0.54	0.45	26.6
14	R2	120	56.0	120	56.0	0.271	9.3	LOS A	1.4	51.2	0.54	0.45	30.6
Approach		169	56.0	169	56.0	0.271	9.3	LOS A	1.4	51.2	0.54	0.45	29.8
West: Bellville Road													
2	T1	190	62.0	190	62.0	0.452	12.1	LOS B	3.0	112.7	0.56	0.42	26.1
12	R2	109	62.0	109	62.0	0.452	12.1	LOS B	3.0	112.7	0.56	0.42	30.1
Approach		299	62.0	299	62.0	0.452	12.1	LOS B	3.0	112.7	0.56	0.42	28.1
All Vehicles		640	57.2	640	57.2	0.452	9.7	LOS A	3.0	112.7	0.41	0.32	30.3

Level of Service (LOS) Method: Delay & v/c (HCM 2010).
Roundabout LOS Method: Same as Sign Control.
Vehicle movement LOS values are based on average delay and v/c ratio (degree of saturation) per movement
LOS F will result if v/c > 1 irrespective of movement delay value (does not apply for approaches and intersection).
Intersection and Approach LOS values are based on average delay for all movements (v/c not used as specified in HCM 2010).
Roundabout Capacity Model: SIDRA Standard.
HCM Delay Formula option is used. Control Delay does not include Geometric Delay since Exclude Geometric Delay option applies.
Gap-Acceptance Capacity: SIDRA Standard (Akçelik M3D).
HV (%) values are calculated for All Movement Classes of All Heavy Vehicle Model Designation.

Copyright © 2000-2014 Akcelik and Associates Pty Ltd
www.sidrasolutions.com

SIDRA INTERSECTION 6

MOVEMENT SUMMARY

Site: Bellville Road at NB Ramps (2042 PM)

Network: Network1

Bellville Road at NB Ramps
Roundabout

Movement Performance - Vehicles													
Mov ID	OD Mov	Demand Flows Total veh/h	HV %	Arrival Flows Total veh/h	HV %	Deg. Satn v/c	Average Delay sec	Level of Service	95% Back of Queue Vehicles veh	Distance ft	Prop. Queued	Effective Stop Rate per veh	Average Speed mph
South: I-75 NB Off-Ramp													
3	L2	108	46.0	108	46.0	0.430	12.4	LOS B	2.6	88.1	0.67	0.62	24.6
8	T1	0	46.0	0	46.0	0.430	12.4	LOS B	2.6	88.1	0.67	0.62	30.4
18	R2	155	46.0	155	46.0	0.430	12.4	LOS B	2.6	88.1	0.67	0.62	29.3
Approach		264	46.0	264	46.0	0.430	12.4	LOS B	2.6	88.1	0.67	0.62	27.9
East: Bellville Road													
6	T1	109	46.0	109	46.0	0.350	10.6	LOS B	2.0	69.1	0.63	0.55	27.0
16	R2	109	46.0	109	46.0	0.350	10.6	LOS B	2.0	69.1	0.63	0.55	31.0
Approach		219	46.0	219	46.0	0.350	10.6	LOS B	2.0	69.1	0.63	0.55	29.5
West: Bellville Road													
5	L2	104	50.0	104	50.0	0.264	6.7	LOS A	0.0	0.0	0.00	0.00	34.2
2	T1	135	50.0	135	50.0	0.264	6.7	LOS A	0.0	0.0	0.00	0.00	35.2
Approach		240	50.0	240	50.0	0.264	6.7	LOS A	0.0	0.0	0.00	0.00	34.8
All Vehicles		722	47.3	722	47.3	0.430	10.0	LOS A	2.6	88.1	0.44	0.39	30.3

Level of Service (LOS) Method: Delay & v/c (HCM 2010).
Roundabout LOS Method: Same as Sign Control.
Vehicle movement LOS values are based on average delay and v/c ratio (degree of saturation) per movement
LOS F will result if v/c > 1 irrespective of movement delay value (does not apply for approaches and intersection).
Intersection and Approach LOS values are based on average delay for all movements (v/c not used as specified in HCM 2010).
Roundabout Capacity Model: SIDRA Standard.
HCM Delay Formula option is used. Control Delay does not include Geometric Delay since Exclude Geometric Delay option applies.
Gap-Acceptance Capacity: SIDRA Standard (Akçelik M3D).
HV (%) values are calculated for All Movement Classes of All Heavy Vehicle Model Designation.

Copyright © 2000-2014 Akcelik and Associates Pty Ltd
www.sidrasolutions.com

MOVEMENT SUMMARY

Site: Bellville Road at SB Ramps (2042 PM)

Network: Network1

Bellville Road at SB Ramps
Roundabout

Movement Performance - Vehicles

Mov ID	OD Mov	Demand Flows Total veh/h	Demand Flows HV %	Arrival Flows Total veh/h	Arrival Flows HV %	Deg. Satn v/c	Average Delay sec	Level of Service	95% Back of Queue Vehicles veh	95% Back of Queue Distance ft	Prop. Queued	Effective Stop Rate per veh	Average Speed mph
East: Bellville Road													
1	L2	68	46.0	68	46.0	0.245	6.3	LOS A	0.0	0.0	0.00	0.00	35.0
6	T1	160	46.0	160	46.0	0.245	6.3	LOS A	0.0	0.0	0.00	0.00	35.9
Approach		228	46.0	228	46.0	0.245	6.3	LOS A	0.0	0.0	0.00	0.00	35.7
North: I-75 SB Off-Ramp													
7	L2	128	49.0	128	49.0	0.482	13.7	LOS B	3.2	111.2	0.69	0.66	23.9
4	T1	0	49.0	0	49.0	0.482	13.7	LOS B	3.2	111.2	0.69	0.66	23.9
14	R2	167	49.0	167	49.0	0.482	13.7	LOS B	3.2	111.2	0.69	0.66	28.7
Approach		295	49.0	295	49.0	0.482	13.7	LOS B	3.2	111.2	0.69	0.66	27.2
West: Bellville Road													
2	T1	160	50.0	160	50.0	0.514	14.5	LOS B	3.8	132.1	0.72	0.67	24.7
12	R2	154	50.0	154	50.0	0.514	14.5	LOS B	3.8	132.1	0.72	0.67	29.4
Approach		315	50.0	315	50.0	0.514	14.5	LOS B	3.8	132.1	0.72	0.67	27.6
All Vehicles		838	48.6	838	48.6	0.514	12.0	LOS B	3.8	132.1	0.51	0.48	29.1

Level of Service (LOS) Method: Delay & v/c (HCM 2010).
Roundabout LOS Method: Same as Sign Control.
Vehicle movement LOS values are based on average delay and v/c ratio (degree of saturation) per movement
LOS F will result if v/c > 1 irrespective of movement delay value (does not apply for approaches and intersection).
Intersection and Approach LOS values are based on average delay for all movements (v/c not used as specified in HCM 2010).
Roundabout Capacity Model: SIDRA Standard.
HCM Delay Formula option is used. Control Delay does not include Geometric Delay since Exclude Geometric Delay option applies.
Gap-Acceptance Capacity: SIDRA Standard (Akçelik M3D).
HV (%) values are calculated for All Movement Classes of All Heavy Vehicle Model Designation.

Copyright © 2000-2014 Akcelik and Associates Pty Ltd
www.sidrasolutions.com

SIDRA INTERSECTION 6

Russell R. McMurry, P.E., Commissioner

GEORGIA DEPARTMENT OF TRANSPORTATION

One Georgia Center, 600 West Peachtree Street, NW
Atlanta, Georgia 30308
Telephone: (404) 631-1000

March 16, 2018

Re: Responses to Lowndes County Stakeholder Meeting for PI #'s 0007386 & 0010297
Interchange Modifications at I-75 and Exit 2/CR 274/Bellville Road and Exit 11/SR 31/Madison Hwy

Dear Stakeholder,

Thank you for your questions and comments concerning the proposed projects referenced above. We appreciate your participation and all of the input that was received as a result of the February 15, 2018 Stakeholder Meeting. Your verbal and written comments have been recorded for the project's official records.

A total of 26 people attended the Stakeholder Meeting in Valdosta, GA including representatives from Packaging Corporation of America, Langdale Industries, and Lowndes County public officials. Questions and comments were received at the Stakeholder Meeting and written comments were provided by the Valdosta Lowndes County Chamber of Commerce Transportation Policy Committee and Hunts Industries.

There were broad categories of comments that encompassed most of the comments received. The majority of the comments were related to design, traffic signals, and business impacts. We have grouped these into the following general questions and concerns. The Georgia Department of Transportation (GDOT) has prepared this response letter to address all comments received so that everyone can be aware of the concerns raised and the responses given. Please find the comments summarized below (in *italics*) followed by the Department's response.

- ***Comments were received regarding the slope of the truck apron at Exit 11.***

  The slope of the proposed truck apron is at a 1% grade for both Exits 2 and 11. Comparatively, a 2% slope is very similar to the conditions experienced everyday by the travelling public on roadways.

- ***Comments were received concerning the traffic count projections for Exit 11.***

  The Department's traffic analysis indicated neither roundabout configuration would require multi-lanes, except for extra lanes to the entrance ramp bypasses. Traffic projections have been included as an attachment to this letter and downloaded to the GDOT Public Outreach Site, http://www.dot.ga.gov/PS/Public/PublicOutreach: Select 'I-75 at Exits 2/Bellville and 11/Madison Hwy' in the 'By Project' pull-down menu and then select 'Go'.

- ***Comments were received regarding the requirements to meet signal warrants.***
- ***Comments were received questioning why signals were included at Exits 22 & 29.***

  GDOT requires that a Traffic Engineering Study (T.E. Study) be completed to determine if a traffic signal is warranted. This study includes many different aspects of the intersection including: traffic conditions, traffic volumes, pedestrian characteristics, physical characteristics of the roadway, and the Engineer's conclusion and recommendations. In order to obtain approval, the study must include an analysis showing that a traffic signal will improve the safety and operations of the intersection. This is identified by analyzing the traffic volumes in different ways, called warrants. Based on current traffic data, signals are not warranted for Exits 2 and 11. However based on the criteria, signals are warranted at Exits 22 and 29. A document on requesting traffic signals has been included

as an attachment to this letter and downloaded to the GDOT Public Outreach Site, http://www.dot.ga.gov/PS/Public/PublicOutreach: Select 'I-75 at Exits 2/Bellville and 11/Madison Hwy' in the 'By Project' pull-down menu and then select 'Go'.

- ***Comments were received questioning whether an intersection control change is needed at Exit 11.***
- ***Comments were received concerning the number and severity of crashes at Exit 11.***

The current intersection control method at Exit 11 is a two-way stop control off the interstate ramps. The likeliness of a serious and/or fatal crash is higher using this method of intersection control on the existing diamond interchange, which has 26-conflict points, as opposed to the proposed single-lane roundabouts with 16-conflict points (8-conflict points per roundabout). GDOT is committed to driver safety and is proposing a roundabout design solution that reduces conflict points.

Additionally, the justification for this project is to address existing sight distance concerns at the intersection which currently does not meet the required design minimums. Lastly, the current crash data at this intersection show higher injury-related crashes than property damage crashes. Roundabouts are a proven countermeasure for injury–related crashes.

- ***Comments were received concerning alternate design solutions to the proposed roundabouts.***

GDOT considered an additional design option of raising the mainline profile as opposed to the roundabout design. This design option was discussed at the Stakeholder Meeting.

Raising the mainline profile would displace more commercial businesses near the ramps and neutralize more land near the interchange that could otherwise be used for future commercial development. This design option was not pursued further for these reasons.

- ***Comments were received regarding the potential for increased truck insurance rates.***

A change in intersection control is not likely to trigger an increase in truck insurance rates. Insurers increase rates as a result of increases in crash frequency. Roundabouts are proven to reduce crash frequency. A national study of roundabouts in the United States have shown that converting a side street stop controlled condition to a roundabout reduced injury crashes by eighty-two percent (82%).

- ***Comments were expressed that the delivery times will increase for the log trucks/suppliers resulting in increased supplier costs that will be passed on to the log companies.***

GDOT is committed to reducing impacts to businesses during the development of design solutions on all projects. With these interchange projects, the design has been optimized to reduce the impacts to the existing businesses. Additionally, since roundabouts reduce crash frequency, there will also be less chance of delay due to congestion triggered by crashes.

- ***Comments were received concerning navigating safely through roundabouts with a single pivot point.***
- ***Comments were expressed concerning the difficulty of reducing the log truck speed from 45 mph to 25 mph (existing speed condition approaching the roundabout speed).***

At the Stakeholder Meeting, GDOT shared drone footage of log trucks and passenger cars safely navigating through roundabouts in Moultrie, GA. The log trucks traveling through the roundabouts in Moultrie have the same dimensions (single pivot point) as the log trucks currently travelling through the interchange at I-75/SR 31. While traveling the US & State Routes, log truckers encounter various intersection controls including signals and stop signs; therefore, having to reduce speed or having to stop for intersection control is very common for professional truck drivers. ***Comments were received concerning the log truckers taking alternate routes to avoid the roundabouts and increased costs in obtaining raw materials.***

GDOT cannot restrict the use of other state routes as alternatives to the proposed roundabouts at I-75/SR 31. Using alternate state routes would take more time to travel than utilizing the existing route with the proposed roundabouts. Additionally, with most drivers relying heavily on mapping apps, drivers will most likely take the shortest, most direct route available.

Again, thank you for your comments. Should you have further questions, comments, or concerns you may contact Cleopatra James, Georgia DOT Project Manager, at (404) 631-1546 or via email at cjames@dot.ga.gov.

Sincerely,

Meg Pirkle

Meg Pirkle, P.E.
Chief Engineer
Georgia Department of Transportation

AVS
KWN:CLB:CBF:ccj

Attachments:
Lowndes County Traffic Forecasting Report
Traffic Signals Public Information Document
Stakeholder Meeting Sign-In Sheet

cc: Tim Golden, Honorable GDOT Board Member, Congressional District 8
Albert V. Shelby, III, Director of Program Delivery
Andrew Heath, P.E., GDOT State Traffic Engineer
Ritchie Swindell, P.E., District 4 Engineer
Juanita Birmingham, District 4 Communications Officer
Derrick Vincent, P.E., , Jacobs Engineering
Christina Barry, P.E., Traffic Operations Manager

Project File

MEETING SIGN-IN SHEET – STAKEHOLDER MEETING

Project:	PI 0007386 & PI 0010297	**Meeting Date:**	02/15/2018
Facilitator:	Cleopatra James	**Place/Room:**	Rainwater Conf Center Valdosta, GA

Name	Company	Phone	E-Mail
PAUL KASPEREEN	G.D.O.T.	229-733-6785	PKaspereen@dot.ga.gov
Larry Fudge	Langdale Ind.	229-560-4291	lfudge@langdaleindustries.com
Don Pope	PCA	229-548-4055	dpope@packagingcorp.com
Jamie Hill	PCA	229-460-5359	jhill@packagingcorp.com
Brittney Hull	PCA	229 460 5735	bhull@packagingcorp.com
GARY WISENBAKER	BLACKSTONE / CHAMPION	912 213 2553	gary@blackstonestrategy.com
DHARMESH PATEL	L. P. Hospitality	229-221-7585	DHARMESH4298@ATT.net
Myrna Ballard	V-LC Chamber	229-247-8100	mballard@valdostachamber.com
Sandra Tooley	V-LC Chamber	229-259-3500	stooley@valdostacity.com
BRIAN ISELIN	JACOBS	404-978-7432	brian.iselin@jacobs.com
Don Deaver	Georgia Gulf Sulfur	229 251 1463	don@georgiagulfsulfur.com
Devin Corbitt	PCA	229-548-6828	dcorbitt@packagingcorp.com
Domarcus Marshall	Lowndes County Commission	229.630.3866	dmarshall@lowndescounty.com
TONIA BROWN	JACOBS		
BRIAN ISELIN	↓		
DERRICK VINCENT			
Chandria Brown			
Christina Barry	GDOT	(404)635 2922	cbarry@dot.ga.gov
Edward Waters	GDOT	404-635-2467	ewaters@dotiga.gov
MARK Wisenbaker	Lowndes Co. Commission	229-460-1624	markwisenbaker+bellsouth.net
TIM WARREN	GDOT	229-386-3300	twarren@dot.ga.gov
VAN MASON	"	229-386-3314	vmason@dot.ga.gov

DANIEL TREVORROW GDOT 404-635-2967
TRAFFIC OPS. dtrevarrow@dot.ga.gov

Will Moore Guardian Bank 229.242.9444 will.moore@guardianbankonline.com

Mark Lenters Ourston 608 886-6747 mlenters@ourston.com

Russell R. McMurry P.E., Commissioner

GEORGIA DEPARTMENT OF TRANSPORTATION

One Georgia Center, 600 West Peachtree Street, NW
Atlanta, Georgia 30308
Telephone: (404) 631-1000

December 1, 2017

Curtis R. Corbett
P.O. Box 811
Lake Park, GA 31636

Re: Responses to Open House Comments for PI#'s: 0007386 and 0010297, Lowndes County
I-75 at Exits 2/Bellville and 11/Madison Hwy

Dear Curtis R. Corbett,

Thank you for your comments concerning the proposed projects referenced above. We appreciate your participation and all of the input that was received as a result of the September 7, 2017 Public Information Open House (PIOH) meeting. Every written comment received and verbal comment given to the court reporter will be made part of the project's official record.

A total of 66 people attended the open house in Lake Park, GA on September 7, 2017. Of the 17 respondents who formally commented, one (1) was in support of the project, two (2) were opposed, zero (0) were uncommitted, two (2) expressed conditional support, and 12 people provided comments only. Based on the content of those 12 comments, it appears that 10 were against, one (1) was conditional, and one (1) was in support of the project.

Of the categories of concerns mentioned, the comment breakdown consisted of 15 comments about roundabouts, 2 comments about property concerns, and 2 comments about business impacts.

The comments have been grouped into the following general questions and concerns. The Georgia Department of Transportation (GDOT) has prepared this one response letter that addresses comments received so that everyone can be aware of the concerns raised and the responses given. Please find the comments summarized below (in *italics*) followed by our response.

<u>Roundabout Concerns</u>

- *How has GDOT listened to the public comments about roundabouts?*

  GDOT wants to assure the community that the concerns and comments submitted for these interchange improvement projects are being addressed. These roundabouts have been specifically modeled for the proposed locations. In summary, GDOT is considering the following:
  1) GDOT accommodated the truck volumes in the area by adjusting aprons and cross slopes of the roundabouts for these interchanges.
  2) It is standard procedure that GDOT conducts checks on the design to ensure feasibility and appropriate design for the area. GDOT is reviewing grade and breakovers to specifically address questions about the potential for rollover.

3) GDOT has worked with local companies to obtain the specific dimensions of the trucks that travel these interchanges and are modeling them in the roundabouts to ensure the design works with the actual local truck traffic.
4) GDOT will have additional outreach with business leaders to provide roundabout education and simulations using log trucks.

- *Why would roundabouts be implemented at the ramp termini?*

While it might seem that roundabouts are commonly used options along roadways or typical intersections, roundabouts can be used in a variety of conditions, including at ramp termini. Roundabouts are proposed for intersections where studies show they would be operationally feasible according to GDOT design guidance. At the interchanges of I-75 at Exits 2 and 11, at Bellville Road and SR 31/Madison Hwy, the roundabout alternative has been evaluated and determined to be operationally feasible and provide multiple benefits for the travelling public (see additional information in the response below.)

It is current GDOT policy that roundabouts be considered as an alternative for all new intersections as well as for existing intersections that have been identified as needing major safety or operational improvements. GDOT recognizes that the roundabout is a viable intersection alternative when placed in the appropriate location, and designed properly for the local conditions. For more information on GDOT's roundabouts see http://www.dot.ga.gov/DS/SafetyOperation/Roundabouts.

One example of roundabouts at ramp termini constructed in Georgia is located at I-285 and Riverside Drive and another one is under construction on Carbondale Road at I-75 in Whitfield County. GDOT has several other roundabout interchanges that are in the design process.

The following websites provide additional information on roundabouts, safety, usage, and design:

- https://safety.fhwa.dot.gov/intersection/innovative/roundabouts/ -Federal Highway Administration (FHWA)
- https://safety.fhwa.dot.gov/intersection/innovative/roundabouts/fhwasa10006/#s32 - FHWA
- https://www.youtube.com/watch?v=uhHzly_6lWM – FHWA
- https://nacto.org/docs/usdg/nchrprpt672.pdf - NCHRP Report 672-Roundabouts: An Information Guide, Second Edition
- http://www.dot.ga.gov/DriveSmart/SafetyOperation/Documents/Modern_Roundabouts_in_Georgia.pdf - GDOT

- *What are the benefits of roundabouts for this project?*

Roundabouts provide a number of safety, operational, and other benefits when compared to other conventional types of intersections. Specifically, they have fewer conflict points, lower speeds, and have been found to reduce the number and severity of crashes, fuel consumption, and air pollution in certain circumstances. Roundabout speeds within the intersection are slower, giving drivers more time to react. Roundabouts present fewer conflict points than a traditional signalized intersection, presenting fewer opportunities for vehicles to collide. Crashes at roundabouts are less severe as roundabouts remove head-on collisions and vehicles are traveling at a slower speed through a roundabout than through a signalized intersection. There are

multiple benefits of roundabout interchanges including: potentially reducing the queue length on the off-ramps, reducing the intersection sight distance, and allowing for smoother merging behavior onto the freeway and resulting in a slightly higher performance at the freeway merge area. Roundabouts complement other transportation objectives without compromising the ability to keep people and freight moving.

Roundabouts can actually improve travel times by eliminating unnecessary stops and delays. At Exit 2/Bellville Rd, when comparing a signal to a roundabout, the queue lengths and seconds of delay can be reduced to a maximum of 23 feet and 3.6 seconds in 2022, respectively, and 54 feet and 7 seconds in 2042, respectively. Similarly, at Exit 11/SR 31/Madison Highway, when comparing a signal to a roundabout, the queue lengths and seconds of delay can be reduced to a maximum of 184 feet and 43.2 seconds in 2022, respectively, and 175 feet and 41.2 seconds in 2042, respectively. One readily observable pattern for all four roundabout intersections is that the off ramps from I-75 north and south bound will benefit from reduced queue lengths, which prevents concerns of stacking along I-75. Given the low traffic volumes at Exits 2 and 11, the roundabout would better facilitate the movement of freight and goods to accommodate all approaches as opposed to delays associated with an intersection with a conventional traffic signal on the low-volume roadways.

This type of intersection configuration allows for easy U-turn movements. Therefore, the travelling public could easily turn around and readily access the commercial properties adjacent to these interchanges. This would allow for improved mobility as well as retaining the access to the commercial properties which are important elements of the local economy.

In addition, during previous public outreach efforts, there was interest to provide beautification or a gateway 'feel' at Exit 2 due to the proximity to the state line. The roundabout has the potential to serve as more of an aesthetic benefit for the community and increases the potential for landscaping opportunities in the future.

- *How would roundabouts function and be safe with the number of trucks, tandem trucks, emergency vehicles, and farm equipment?*

The roundabouts are designed to accommodate current and projected truck traffic, including a 73.5-foot long semi-truck (a standard WB-67 roundabout design vehicle) and much larger oversized/overweight vehicles as indicated by the historical permit records for both interchanges. Designing the geometry of the roundabouts around this wide range of vehicles ensures that they will accommodate all types and sizes of vehicles known to use these interchanges.

The approximately 155-foot inscribed diameter circles, lane widths, placement of concrete islands and alignments of the roundabout approaches have been specifically designed so that all truck traffic can traverse through and around the roundabouts without mounting any curbs that are not there to intentionally be mounted. The raised concrete ring around the central islands (called the truck apron) has a 4-inch mountable curb on it and is intended to be driven on by large trucks. It is designed to carry heavy truck loads as they either track across it with their back wheels or mount it entirely as may be the case for the largest oversized/overweight vehicles. The truck apron, 22-foot circulating lanes and widths of the entering and exiting lanes ensure that there is enough space for emergency vehicles to pass other vehicles in the roundabouts if needed.

The cross slopes and cross slope transitions of the truck apron and lanes entering, circulating and exiting are carefully designed to make sure that large trucks, farm equipment and oversized/overweight vehicles don't tip over or get stuck while traversing the roundabouts.

Being elevated slightly the truck apron provides accommodations for larger trucks while cutting off a direct path into the circle for smaller vehicles such as delivery trucks and passenger cars. This prevents vehicles from entering the roundabouts too quickly. The truck apron and other geometrical features previously mentioned have been designed so that the maximum theoretical entry speed into the roundabouts is approximately 25 miles per hour (mph). Taking this into account, as well as, the likely reduction of angle and head-on collisions due to the geometry, accidents that occur are significantly less likely to result in injury or worse. The slower design speeds within the roundabouts also reduce the speed differential between trucks and non-trucks.

The project designers are fully aware of the number of freight-dependent businesses in the areas of both interchanges and will continue to take large trucks, oversized overweight vehicles and emergency vehicles into account while finalizing the designs.

The following websites provide additional information on roundabouts, safety, usage, and design:

- https://safety.fhwa.dot.gov/intersection/innovative/roundabouts/ -Federal Highway Administration (FHWA)
- https://safety.fhwa.dot.gov/intersection/innovative/roundabouts/fhwasa10006/#s32 - FHWA
- https://www.youtube.com/watch?v=uhHzly_6lWM – FHWA
- https://nacto.org/docs/usdg/nchrprpt672.pdf - NCHRP Report 672-Roundabouts: An Information Guide, Second Edition
- http://www.dot.ga.gov/DriveSmart/SafetyOperation/Documents/Modern_Roundabouts_in_Georgia.pdf - GDOT
- For more information on emergency vehicles in roundabouts see FHWA's brochure on the topic: https://safety.fhwa.dot.gov/intersection/innovative/roundabouts/responder/responderbrochure.pdf

GDOT anticipates additional outreach with business leaders to provide roundabout education and simulations using log trucks to ensure the local business needs are met.

Property Concerns

- *Concerns about changes in property impacts in the area*

The project concept was developed after a thorough evaluation of environmental resources, including the natural, cultural, physical and human environment, as well as the evaluation of access to existing structures and engineering requirements. The proposed ROW was established based on the needs of the roadway. The GDOT makes every attempt to minimize property acquisition and relocations during the project design phase. Unfortunately, property acquisitions

are unavoidable for some projects. As the design progresses, GDOT will make every effort to minimize the amount of ROW impacts to the greatest extent possible.

While our goal is to provide a facility that meets the needs of the traveling public, how we make this facility fit into the local community is important to us and requires understanding your priorities. We pledge to follow GDOT's Context Sensitive Design (CSD) Policy to ensure that the transportation investments create the greatest value possible within the community. Impacts of the project will be evaluated in the Categorical Exclusion environmental document.

Business Impacts

- *Concerns that business would be affected and lose revenue*

In accordance with GDOT's Plan Development Process, natural, human, and cultural resources within these project limits have been identified. GDOT has evaluated the existing parcels within the project limits and identified multiple active businesses. The locations of these businesses were considered in the design of these projects in terms of avoidance and minimization. Specifically, alternatives were evaluated to avoid, minimize, and mitigate impacts. The proposed alignment was established only after the appropriate design criteria were applied and the aforementioned alternatives were considered.

Access to business and sales may temporarily drop during the actual construction of the project; however, following construction, area businesses should benefit from the expected improvement in access, safety/operational benefits, and a natural increase in traffic volumes that would occur over the course of 20 years regardless of project implementation. The proposed bridge designs were developed to minimize impacts to businesses. Maintenance of access and travel patterns were considered during the engineering design development for both the preconstruction and construction phases of the projects.

Again, thank you for your comments. Should you have further questions, comments or concerns, please call the GDOT Project Manager, Cleopatra James, at (404) 631-1546 or cjames@dot.ga.gov or the environmental analyst, Elliott Robertson, at (404) 631-1190 or erobertson@dot.ga.gov.

Sincerely,

Eric Duff

Eric Duff
State Environmental Administrator
Georgia Department of Transportation

ED/er/ld

C: Cleopatra James, GDOT Project Manager (via email)
PDF for Project File

From: Robertson, Elliott S [mailto:ERobertson@dot.ga.gov]
Sent: Thursday, September 14, 2017 2:33 PM
To: James, Cleopatra C; Swindell, Ritchie; Carter, Dennis; Birmingham, Juanita Y; Dawood, Laura
Cc: Pirkle, Meg; Phillips, Amber; Shelby, Albert; Patel, Hiral; Duff, Eric
Subject: PI# 0007386 and 0010297, Lowndes County -- Public Information Open House Synopsis

Hi everyone,

Below please find below a brief synopsis of last night's Open House. Please let me know if you have questions or concerns.

Brief Project Description	I-75 Interchange Modifications at Exits 2/CR 274/Bellville Road and 11/SR 31/Madison Hwy – Roundabouts, Lowndes County						
Date of Open House	9/7/2017			*End of Comment Period*		9/21/2017	
Number in Attendance	**66**						
Officials in Attendance (list name and title)	Tim Golden, Board Member Corey Hull, S GA Regional Commission JD Dillard, S GA Regional Commission Eric Schindler, Mayor Lake Park Ronald Carter, City of Lake Park City Council Jena Sandlin, City of Lake Park City Council						
*Comment Breakdown (for comments provided at the Open House)- **4** total comment cards received*							
For	1	*Conditional*	2	*Uncommitted*	*	*Against*	1
Major concerns:	*- One person stated they were *for* and *uncommitted*. The commenter stated that they seldom use the exits, but see the positive sides of the roundabout. For quantitative purposes of the comment breakdown, this is categorized as a 'For'. -There are concerns with roundabouts and the ability for a high number of trucks to maneuver it effectively. -There are sight distance problems currently and slowing down will help. - There are concerns with the effect of roundabouts on first responders response time, and effect on farmers. - There are concerns with how the project will impact property and affect property values						
Prepared by (include firm's name if applicable):	Laura Dawood, AECOM						

Elliott Robertson, Environmental Analyst
GDOT Office of Environmental Services
Georgia Department of Transportation
600 West Peachtree Street, Atlanta, GA 30308
404-631-1190 ERobertson@dot.ga.gov

Russell R. McMurry, P.E., Commissioner

GEORGIA DEPARTMENT OF TRANSPORTATION

One Georgia Center, 600 West Peachtree Street, NW
Atlanta, Georgia 30308
Telephone: (404) 631-1000

October 17, 2016

Deborah Sauls
1100 W. Marion Ave
Lake Park, GA 31636

Re: Responses to Open House Comments for PI #s 0007386 and 0010297, Lowndes County, Interchange Modifications at I-75 and Exit 2/CR 274/Bellville Road and Exit 11/SR 31/Madison Highway
Project Numbers: CSNHS-0007-00(386) & CSNHS-0010-00(297)

Dear Ms. Sauls:

Thank you for your comments concerning the proposed projects referenced above. We appreciate your participation and all of the input that was received as a result of the August 25, 2016 Public Information Open House. Every written comment received and verbal comment given to the court reporter will be made part of the projects' official record.

A total of **43** people attended the open house. Of the **three (3)** respondents who formally commented, **all three (3)** were in **support** of the projects, **none (0)** were **uncommitted**, and **none (0)** expressed **conditional support**. No comments were received by the court reporter. No additional comments were received during the comment period.

The attendees of the open house and those persons sending in comments within the comment period raised the following questions and concerns. The Georgia Department of Transportation (GDOT) has prepared this one response letter that addresses all comments received so that everyone can be aware of the concerns raised and the responses given. Please find the comments summarized below (in *italics*) followed by our response.

- *The existing condition is a safety hazard at Exit 2 along CR 274/Bellville Road*

  The interchange improvements at both CR 274/Bellville Road and SR 31/Madison Hwy will serve to benefit the overall safety of the travelling public. Several improvements are being proposed that will address safety. The height of the road (vertical alignment) at CR 274/Bellville Road, including the proposed bridge, will be upgraded to match the 45 mile per hour speed and improve sight distance for drivers. Signalization and longer turn lanes will be added at the ramp intersections to improve safety and operations. Dedicated right turn lanes are proposed for traffic turning onto the interstate on-ramps. The longer turn lanes and dedicated right turn lanes will separate slow moving queued traffic from the thru traffic lanes. In addition, the installation of the median along the western and eastern approaches to the bridge will provide a barrier separating opposing traffic. These changes will create predictable travel patterns that promote safety.

- *Concern about potential impacts to businesses at Exit 2 at CR 274/Bellville Road*

  In accordance with the GDOT Plan Development Process, natural, human, and cultural resources within these project limits have been identified. The GDOT has evaluated the existing parcels within the project limits of both interchange modifications and identified multiple active businesses. The location of these businesses were considered in the design of these projects in terms of avoidance and minimization. Specifically, alternatives were evaluated to avoid, minimize, and mitigate impacts. The proposed alignment was established only after the appropriate design criteria was applied and the aforementioned alternatives were considered.

As indicated in the displays presented in the open house, both interchange modification projects will result in impacts to buildings, driveway access, and parking. As previously noted, the projects have been designed to reduce the footprint of impacts as much as possible. For example, walls are included in the project plans in order to minimize impacts to parking. The GDOT understands that owners may have questions and/or concerns. A right of way brochure is available to assist affected persons and can be found at this link: http://www.dot.ga.gov/PartnerSmart/Public/Documents/Right-of-Way/ROWBrochure-English.pdf. During the right of way phase of the projects, impacted property owners will be contacted by GDOT personnel and their questions and/or concerns will be addressed.

- *Suggestion that the widening on SR 31/Madison Hwy needs to extend to Whitewater Road, include turn lanes onto Whitewater Road and into the Dollar General store.*

The proposed project limit is identified as Hart Road, just east of Whitewater Road. The limits of the project were developed to specifically accommodate the needs of this particular project. The need of the project consists of replacing the bridge over I-75 to accommodate future widening as well as to improve safety and operations at the interchange and approaches to the interchange. Based on traffic volumes used in designing this project and a review of crashes at this intersection, neither Hart Road nor Whitewater Road would justify a turn lane. However, Hart Road provides a logical end point to taper the road down to accommodate one travel lane in each direction.

Your assistance is appreciated. If you have any questions or need additional information, please contact the GDOT Project Manager, Cleopatra James, at 404-631-1546 or cjames@dot.ga.gov or the GDOT NEPA Planner, Elliott Robertson, at 404-631-1190 or erobertson@dot.ga.gov.

Sincerely,

Eric Duff

Eric Duff
State Environmental Administrator

ED/er/ld

cc: Cleopatra James, GDOT OPD
Elliott Robertson, GDOT OES
Derrick Vincent, Jacobs
PDF for Project File; Hardcopy to General Files

From: Dawood, Laura [mailto:Laura.Dawood@aecom.com]
Sent: Sunday, August 28, 2016 4:52 PM
To: erobertson@dot.ga.gov
Subject: 160828-LD to ER-PIOH Synopsis for PIs 0007386, 0010297, Lowndes County

Elliott,
As discussed, please see the PIOH synopsis below for your review/comment and let me know if you have any questions.

For your reference, a photo of one of the signs is attached.

Thanks,
Laura

****
Complete this on the day after the Open House. Try to email the recipients by 10am. Save the sent email in Project Documents.
STEP 1: Enter the PI# and county where appropriate in the subject line—ensure the type of Open House is shown correctly.
STEP 2: Fill in the appropriate information in the table below.
STEP 3: If you are a consultant preparer, email this to the assigned GDOT NEPA Analyst for review and transmittal (leave Step 4 & 5 for the GDOT NEPA Analyst).
STEP 4: Cut and paste the list of recipients below for the "To:" line; Further add the PM, the District Engineer, the District Communications Officer, the consult preparer (if applicable);
Recipient List:
rmcmurry@dot.ga.gov, hpatel@dot.ga.gov, eduff@dot.ga.gov
(The above include in order: Chief Engineer, Engineering Division Director, OES Office Head, NEPA-side Assistant OES Office Head)
STEP 5: DELETE THESE INSTRUCTIONS!
****

Hi everyone,

Below please find below a brief synopsis of the Open House. Please let me know if you have questions or concerns.

Brief Project Description	I-75 Interchange Modifications at Exit 2/Bellville Road (0007386) and Exit 11/SR 11/Madison Hwy (0010297) in Lowndes County						
Date of Open House	8/25/2016			*End of Comment Period*		9/8/2016	
Number in Attendance	43						
Officials in Attendance (list name and title)	• Jena Sandlin, Lake Park Council • Eric Schindler, Lake Park Mayor • Mark Wisenbaker, Lowndes County Commission #3 • + 3 local businesses represented (S&S Auto & Diesel, Travel Center of America, Ft Worth Carrier Corp.)						
Comment Breakdown (for comments provided at the Open House)							
For	3	*Conditional*		*Uncommitted*		*Against*	

Major concerns:	Safety (PI 0007386, Exit 2)- Current condition is a safety hazard. Economic- Comment noted regarding concern about how the project will impact businesses. There are multiple truck related businesses at both interchanges. Once the project is constructed, access will change for these businesses. The owners are concerned how that will affect traffic flow and the parcels themselves. Project Limits (PI 0010297, Exit 11)- extend project limits to Whitewater Road; add dedicated turn lanes to that intersection. The Dollar General is a busy business and the queue to turn left at Whitewater backs up, creating a bottleneck at this area.
Prepared by (include firm's name if applicable):	Laura Dawood, AECOM

Laura Dawood
NEPA Project Manager
Direct 770.548.9904
laura.dawood@aecom.com

AECOM
400 Northpark | Suite 900
1000 Abernathy Road, NE | Atlanta, Georgia 30328
T 1-678-808-8800 F 1-678-808-8400
www.aecom.com

GENA L. ABRAHAM, Ph.D.
COMMISSIONER
(404) 656-5206

GERALD M. ROSS, P.E.
CHIEF ENGINEER
(404) 656-5277

Department of Transportation

State of Georgia
#2 Capitol Square, S.W.
Atlanta, Georgia 30334-1002

BUDDY GRATTON, P.E.
DEPUTY COMMISSIONER
(404) 656-5206

EARL L. MAHFUZ
TREASURER
(404) 656-5224

July 23, 2008

Ms. Ann Peterson
6260 Peterson Road
Lake Park, GA 31636

Re: NHS-0007-00(386) Lowndes County
P.I. No. 0007386
I-75 from the Florida State Line to SR 133 – Phase 2
Rebuilding four I-75 interchanges and one I-75 overpass

Dear Ms. Peterson

Thank you for your comments last July concerning the proposed project referenced above. The Georgia Department of Transportation (Department) wishes to apologize for the slow response to your comments. Be assured that all the comments were considered as part of the project development. In fact, it has been a busy year for this project. The project is nearing the end of the Concept Development Phase with environmental studies well underway. We hope to begin design in earnest soon. Unfortunately, funding has not been identified for the right of way acquisition or construction portions of the project. Therefore, it may be some time before the project moves out of the design phase. Once again, we appreciate all of the input that was received as a result of the July 2007 Public Information Open House (PIOH), and every comment will be made part of the official record of the project.

A total of 36 people attended the July 2007 Public Information Open House (PIOH). Of the comments we received, 10 were in support of the project, 0 were opposed to the project, 3 were uncommitted, and 1 expressed conditional support for the project.

The attendees of the PIOH and those persons sending in comments afterwards raised the following questions and concerns. The Department has prepared one response letter that addresses all comments received so that everyone can be aware of the concerns raised and the responses given. Please find the comments summarized below (*in italics*) followed by our response.

DESIGN COMMENTS

Comment: *Since exit 2 is the first in Georgia it needs to have a more welcoming landscape (a grand entrance to the state).*
Response: The Department has looked at the installation and maintenance cost for such landscaping features. At this time, budgetary constraints prohibit adding the features to this project. The Department would be willing to review this option again if additional funding options or new funding sources became available in the future.

Comment: *The bridge and ramps are not big enough to accommodate the future developments for the first exit.*
Response: The Department reviewed the existing traffic data and projected traffic data for the first exit. Traffic projections were developed by reviewing historic growth trends, existing land use, and proposed land use. The proposed design should function well for the projected growth trends and the Department does not have the ability to build extra capacity due to budgetary constraints.

Comment: *Please construct these projects as soon as possible to help out our businesses and the local people.*
Response: As noted earlier, right of way and construction funding has not been identified for this project. The Department is currently re-prioritizing projects statewide to better fit the limited available funding. It is hoped that re-prioritization will help the Department manage cash flow on all if its projects and identify funds for this project.

RIGHT OF WAY

Comment*: I own businesses and I am trying to sell. This will affect my ability to sell.*
Response: The Department feels that the ultimate project will generally improve the value the property in the interchanges by improving traffic operations and safety. If you have an impending sale or questions about potential future usage, the Department recommends you contact our project manager, Steve Adewale, as noted in the last paragraph.

Comment*: The site #1 display showed the incorrect owner of the parcel on the northeast corner of the interchange. We would like it to be changed.*
Response: Property owner names for the PIOH were based upon the best data at the time. All property owners will be researched, verified, and updated during the right of way phase.

TRAFFIC OPERATIONS

Comment: *Exit #2 badly needs traffic signals.*
Response: The proposed design includes traffic signals for this interchange.

Thank you again for your comments. Should you have any further questions concerning this project, please call the Department's project manager Steve Adewale at (404) 463-0291 or Katherine Russett of the Office of Environment/Location at (404) 699-6882.

Sincerely,

Glenn Bowman, P.E.
State Environmental/Location Engineer

GSB/kr/jacobs-jjv

cc: Steve Adewale, Office of Consultant Design and Program Delivery
Brent Thomas, District Four Preconstruction Engineer

DEPARTMENT OF TRANSPORTATION
STATE OF GEORGIA

INTERDEPARTMENT CORRESPONDENCE

FILE P. I. No. 0007386 **OFFICE** Environment/Location

DATE August 16, 2007

FROM Glenn Bowman, P.E. , State Environmental/Location Engineer

TO Distribution Below

SUBJECT Project CSNHS-0007-00(386) Lowndes

COMMENT TOTALS:

A total of 36 people attended the public information open house held for the subject project. From those attending, ten comment forms and one verbal statement were received. An additional three comments were received during the ten-day comment period following the public information open house, for a total of 14 comments. They are summarized as follows:

No. Opposed	No. In Support	Uncommitted	Conditional
0	10	3	1

MAJOR CONCERNS:

1. Exit 2 (Lake Park Road) should be landscaped and/or beautified since it is the first exit in Georgia and should appear welcoming.
2. The bridge on Lake Park Road needs to be four lanes instead of three as shown on PIOH Display because of increased traffic due to the proposed Active Adult Community.
3. The projects need to be built as soon as possible, and the let date needs to be moved up if possible, to improve safety and handle the increasing traffic volumes.
4. Site 4 (SR 31 / Madison Highway) in particular needs the improvements and traffic lights.

OFFICIALS:

Officials attending included the following:
Mike Flecthen – Lowndes County Engineer
Dan McGee – M.P.O. Lowndes County

Rhonda Barnes – Lowndes Community Development

Keith Sandler – Mayor, City of Lake Park

Von Shipman – City Engineer, City of Valdosta

DISPOSITION OF COMMENTS:

The design consultant is requested to respond to the comments listed for the following offices:

Consultant Design / Consultant	1,2,4,5,6,7,8,9,10,12,14
District	3, 13
Right-of-Way	0
Traffic Operations / Consultant	2,10,11
Planning	0

The environmental consultant will respond to comments for the following office:

Environmental	0
Location	0

Please have the consultants send this office copies of your responses to these comments by August 31, 2007.

Attached is a complete transcript of the comments received during the comment period and a copy of the hearing handout.

If you have any questions about the comments, please call Paul Alimia at (404) 699-4448.

GSB/PPA

Attachments

DISTRIBUTION:
David Studstill, Jr., P.E.
Joe Sheffield
Jonathan Cox
Paul Alimia
Zanda Crawford

AGREEMENT

BETWEEN

DEPARTMENT OF TRANSPORTATION

STATE OF GEORGIA

AND

LOWNDES COUNTY

This Agreement is made and entered into this 25th day of OCTOBER, 2016, by and between the DEPARTMENT OF TRANSPORTATION, an agency of the State of Georgia, hereinafter called the **DEPARTMENT**, and LOWNDES COUNTY, GEORGIA acting by and through its Board of Commissioners, hereinafter called the **COUNTY**.

WHEREAS, the COUNTY has represented to the DEPARTMENT a desire to obtain high mast lighting as part of the I-75 @ CR 274/Lake Park-Bellville Road – Phase II project, said lighting to be installed under P.I. No. 0007386, Lowndes County;

WHEREAS, the COUNTY has represented to the DEPARTMENT a desire to participate in: 1) Providing the Energy and 2) the Operation and Maintenance of said lighting system at the aforesaid location, and the DEPARTMENT has relied upon such representation; and

WHEREAS, the DEPARTMENT has indicated a willingness to fund the materials and installation for the said lighting system at the aforesaid location, with funds of the DEPARTMENT, funds apportioned to the DEPARTMENT by the Federal Highway Administration under Title 23, United States Code, Section 104, or a combination of funds from any of the above sources.

NOW, THEREFORE, in consideration of the mutual promises made and of the benefits to flow from one to the other, the DEPARTMENT and the COUNTY hereby agree each with the other as follows:

1. The DEPARTMENT or its assigns shall cause the installation of all materials and equipment necessary for high mast lighting as part of the I-75 @ CR 274/Lake Park-Bellville Road – Phase II project, said lighting to be installed under P.I. No. 0007386, Lowndes County as shown on Attachment "A" attached hereto and made a part hereof.

2. Upon completion of installation of said lighting system, and acceptance by the DEPARTMENT, the COUNTY shall assume full responsibility for the operation, the repair and the maintenance of the entire lighting system, including but not limited to repairs of any damages, replacement of lamps, ballasts, luminaires, lighting structures, associated equipment, conduit, wiring and service equipment, and the requirements of the Georgia Utility Facility Protection Act. The COUNTY further agrees to provide and pay for all the energy required for the operation of said lighting system.

3. The DEPARTMENT shall retain ownership of all materials and various components of the entire lighting system. The COUNTY, in its operation and maintenance of the lighting system, shall not in any way alter the type or location of any of the various components which make up the entire lighting system without prior written approval from the DEPARTMENT.

4. This Agreement is considered as continuing for a period of fifty (50) years from the date of execution of this Agreement. The DEPARTMENT reserves the right to terminate this Agreement, at any time for just cause, upon thirty (30) days written notice to the COUNTY.

5. It is understood by the COUNTY that the DEPARTMENT has relied upon the COUNTY'S representation of providing for the energy, maintenance, and operation of the lighting represented by this Agreement; therefore, if the COUNTY elects to de-energize or fails to properly maintain or to repair the lighting system during the term of this Agreement, the COUNTY shall reimburse the DEPARTMENT the materials cost for the lighting system. If the COUNTY elects to de-energize or fails to properly maintain any individual unit within the lighting system, the COUNTY shall reimburse the DEPARTMENT for the material cost for the individual unit which will include all costs for the pole, luminaires, foundations, and associated wiring. The DEPARTMENT will provide the COUNTY with a statement of material costs upon completion of the installation.

The covenants herein contained shall, except as otherwise provided accrue to the benefit of and be binding upon the successors and assigns of the parties hereto.

IN WITNESS WHEREOF, the parties hereto have made and executed this Agreement the day and year first above written.

RECOMMENDED:

LOWNDES COUNTY

BY: _____
Chairman, Board of Commissioners

(SEAL)

DEPARTMENT OF TRANSPORTATION

BY _____
Commissioner

(SEAL)

_____
WITNESS

_____
Notary Public

BELINDA C. LOVERN NOTARY EXPIRES GEORGIA MAY 20, 2017 PUBLIC LOWNDES COUNTY

This Agreement approved by the Board of Commissioners at a meeting held at

_____

this 27th day of September, 2016.

ATTEST:

_____
Treasurer

DEPARTMENT OF TRANSPORTATION STATE OF GEORGIA

_____
Commission Clerk

Attachment "A"

Project Location Map

I-75 @ CR 274/Lake Park-Bellville Road – Phase II
Lowndes County
P.I. No. 0007386

G

DEPARTMENT OF TRANSPORTATION
STATE OF GEORGIA

RECEIVED
D.O.T. GENERAL FILES
2008 APR 29 PM 12:45

INTERDEPARTMENT CORRESPONDENCE

FILE: NHS-0007-00(386) & NHS-0000-00(762) Lowndes
P. I. Nos.: 0007386 & 0000762
I-75 Interchange Improvements

OFFICE: Engineering Services

DATE: February 1, 2008

FROM: Brian Summers, P.E., Project Review Engineer REW

TO: Babs Abubakari, P.E. State Consultant Design and Program Delivery Engineer

SUBJECT: IMPLEMENTATION OF VALUE ENGINEERING STUDY ALTERNATIVES

Recommendations for implementation of Value Engineering Study Alternatives are indicated in the table below. Incorporate alternatives recommended for implementation to the extent reasonable in the design of the project.

ALT No.	Description	Savings PW & LCC	Implement	Comments
A-2(1)	Reduce the CR 274 Bridge width by removing one left-turn lane and changing the 10' rural shoulder design to an urban shoulder design	$496,000	No	Taking out one lane and not having independent left turn lanes would not provide adequate storage length due to the large amount of trucks at this interchange.
A-2(4)	Reduce the S.R. 31 Bridge width by removing one left-turn lane from the bridge typical section	$455,000	No	Taking out one lane and not having independent left turn lanes would not provide adequate storage length due to the large amount of trucks at this interchange.
A-2(5)	Reduce the S.R. 133 Bridge width by removing one left-turn land and one eastbound through lane from the bridge typical section	$1,086,000	No	Taking out one lane and not having independent left turn lanes would not provide adequate storage length due to the large amount of trucks at this interchange.

ALT No.	Description	Savings PW & LCC	Implement	Comments
A-2, B-2	Reduce S.R. 122 from a proposed four/five lane roadway section to a three lane section and reduce the S.R. 122 Bridge width by the same amount.	$1,535,000	No	The results of the Capacity Analysis show a Level of Service (LOS) of E for a three lane section.
A-4	Reduce the overall lengths of the CR 274, S.R. 376, Loch Laurel Road, S.R. 31 and S.R. 133 bridges by changing them from four span structures with 2:1 end slopes to two span structures using MSE Walls with Pile End Bents	(proposed) $1,873,000 (actual) 1,017,360	Yes	The S.R. 133 Bridge will use MSE Walls and Pile End Bents. All other bridges are located in more rural areas and will remain as proposed.
A-4(6)	Reduce the overall length of the S.R. 7 Bridge by changing it from a four span structure with 2:1 end slopes to a two span structure using MSE Walls with Pile End Bents	(proposed) $1,282,000 (actual) $1,058,000	Yes	A variation of the VE Alternative will be used. A MSE Wall will be used in conjunction with a two span bridge that would accommodate the future I-75 off-ramp.
B-2	Reduce the shoulder width on Relocated Morven Road and Union Road from ten feet to six feet	(proposed) $196,000 (actual) $120,600	Yes	The shoulder width will be reduced to 6' but the paved part will be 4' instead of the 2' as recommended by the VE Team.
B-5	Eliminate the Interchange Entrance and Exit Ramp Tie-ins for the proposed future fourth lane on I-75 at CR 274, S.R. 376, S.R. 31, and S.R. 133	(proposed) $1,095,000 (actual) $306,400	Yes	This will be modified to include 6 other ramps. The ramps will tie to the existing six-lane section as soon as possible to eliminate wide gore areas.
A-5	Identify/Define the ultimate typical section for I-75 throughout the corridor	Design Suggestion	Yes	This should be done.

ALT No.	Description	Savings PW & LCC	Implement	Comments
A-11	Consider using a Single Point Urban Interchange at S.R. 376	Design Suggestion	No	The Design Consultant considered a SPUI and determined that the bridge would cost approximately $1.9 million more due to the large bridge that would be required.
A-13	Consider strategies to reduce the bridge depth at S.R. 133	Design Suggestion	Yes	This should be considered during plan development.
A-15	Offset (to the North) the location of the new Bridge to simplify construction under traffic at S.R. 376 & S.R. 31	Design Suggestion	Yes	This should be done.
B-2	Eliminate the reconstruction of a section of Jewell Futch Road at the Georgia Winnebago Property at S.R. 376	Design Suggestion	Yes	This should be done.
C-2	Specify Jacking Bridges as necessary to maintain uniform roadway elevations during bridge reconstruction	Design Suggestion	Yes	This should be done.
C-3	Investigate possible detour routes that would allow the closing of local roads during construction at S.R. 376 and Loch Laurel Road	Design Suggestion	No	Traffic will be maintained by staging traffic during the construction areas; however, consideration could be given to closing one site while the other site is being built and vice versa.
C-4	Use contra-flow traffic lanes on I-75 to aid construction	Design Suggestion	No	The existing median is 40' wide through this corridor which should allow normal staging to occur without contra-flow being required.
G-1	Accommodate additional access on the cross road at S.R. 31	Design Suggestion	Yes	This should be done.

ALT No.	Description	Savings PW & LCC	Implement	Comments
L-1	Hold the east side ramps at their proposed location while shifting the west side ramps inward (maintain a 660' separation) at CR 274	Design Suggestion	No	Would cause the proposed ramps to be constructed over the existing ramps which would make staging more difficult since there is a significant grade change.
L-4	Investigate whether signals could be installed at the realigned truck stop entrances at CR 274 and S.R. 31	Design Suggestion	Yes	This should be done.

A meeting was held on January 11, 2008 to discuss the above recommendations. Jeff VanDyke with Jacobs Carter Burgess, Ralph C. Ramsdell with Moreland Altobelli, Al Bowman with the LPA Group, Stanley Hill and Vinesha Pegram with Consultant Design, and Brian Summers, Ron Wishon, and Lisa Myers with Engineering Services were in attendance.

Additional information was provided by the Design Consultant on January 24, 2008 and February 1, 2008.

The results above reflect the consensus of those in attendance and those who provided input.

Approved: Dale M Ross **Date:** 2/4/08
Gerald M. Ross, P. E., Chief Engineer

Approved: Richard Wayne Fedora **Date:** 4/22/2008
for Rodney Barry, P.E., FHWA Division Administrator

BKS/REW

Attachments

c: Gus Shanine
Todd Long
Paul Liles
Bill Duvall
James Magnus
Joe Cowan
Jerry Hughes
Scott Chambers
Stanley Hill
Vinesha Pegram
Steve Adewale
Paul Alomia
Ken Werho
Nabil Raad
Lisa Myers