Georgia Department of Transportation

Interoffice Memo
Office of Design Policy & Support

DATE: **1/13/2020**

FILE: P.I.# 0013895_0013896_0013897
Gwinnett County / GDOT District 1 - Gainesville
SR316 from Hurricane Trail to Fence Rd - Interchange/CD Lanes
SR316 @ Fence Rd - Rd Closure
SR316 from Fence Rd to SR8/US29 - New Interchange

FROM: for Brent Story, State Design Policy Engineer

TO: SEE DISTRIBUTION

SUBJECT: **APPROVED CONCEPT REPORT**

Attached is the approved Concept Report for the above subject project.

Attachment

Distribution:
Hiral Patel, Director of Engineering
Joe Carpenter, Director of P3
Albert Shelby, Director of Program Delivery
Carol Comer, Director, Division of Intermodal
Darryl VanMeter, Assistant Director of P3/State Innovative Delivery Administrator
Kim Nesbitt, Program Delivery Administrator
Bobby Hilliard, Program Control Administrator
Paul Tanner, State Transportation Planning Administrator
Eric Duff, State Environmental Administrator
Bill DuVall, State Bridge Engineer
Andrew Heath, State Traffic Engineer
Angela Robinson, Financial Management Administrator
Erik Rohde, State Project Review Engineer
Monica Flournoy, State Materials Engineer
Patrick Allen, State Utilities Engineer
Eric Conklin, State Transportation Data Administrator
Attn: Systems & Classification Branch
Benny Walden, Statewide Location Bureau Chief
Rob Mabry, Assistant District Engineer
SueAnne Decker, District Preconstruction Engineer
Yulonda Pride-Foster, District Utilities Manager
Chad White, Project Manager
BOARD MEMBER - 7th Congressional District

Georgia Department of Transportation

Project Concept Report

Project Type:	Interchange	P.I. Number:	0013895-896-897
GDOT District:	1	County:	Gwinnett
Federal Route Number:	29	State Route Number:	316, 8
Project Number:	N/A		

The proposed project will begin east of Cedars Road and extend to the Sugarloaf Parkway Extension interchange on SR 316. The project will provide grade separated interchanges on SR 316 at Hurricane Trail, US 29/ SR 8 Winder Highway, and a local roadway connection over CSX Railroad due to the closure of Fence Road at SR 316. To ease construction impacts to traffic, the future C-D (Collector-Distributor) lanes will be constructed and used as SR 316 mainline until future projects and traffic volumes require full implementation of the mainline lanes.

Submitted for approval: Updated Concept Report received 11/19/2019

Scott Shelton-Atkins	4/26/19 Date
Gwinnett County Department of Transportation	4/29/19 Date
State Program Delivery Administrator (Kimberly W. Nesbitt)	8/8/19 Date
GDOT Project Manager (CJ KESD)	08/02/2019 Date

Recommendation for approval:

* Eric Duff/AT State Environmental Administrator	8/15/2019 Date
* Chris Raymond/AT for State Traffic Engineer	11/22/2019 Date
* Erik Rohde/AT Project Review Engineer	8/15/2019 Date
* Stevonn Dilligard/AT for State Utilities Engineer	8/14/2019 Date
* SueAnne Decker/AT for District Engineer	12/10/2019 Date
* Bill DuVall/AT State Bridge Engineer	9/05/2019 Date

☒ MPO Area: This project is consistent with the MPO adopted Regional Transportation Plan (RTP)/Long Range Transportation Plan (LRTP).

☐ Rural Area: This project is consistent with the goals outlined in the Statewide Transportation Plan (SWTP) and/or is included in the State Transportation Improvement Program (STIP).

* Paul Tanner/AT State Transportation Planning Administrator	7/03/2019 Date

* Recommendations on File/AT

PROJECT LOCATION MAP

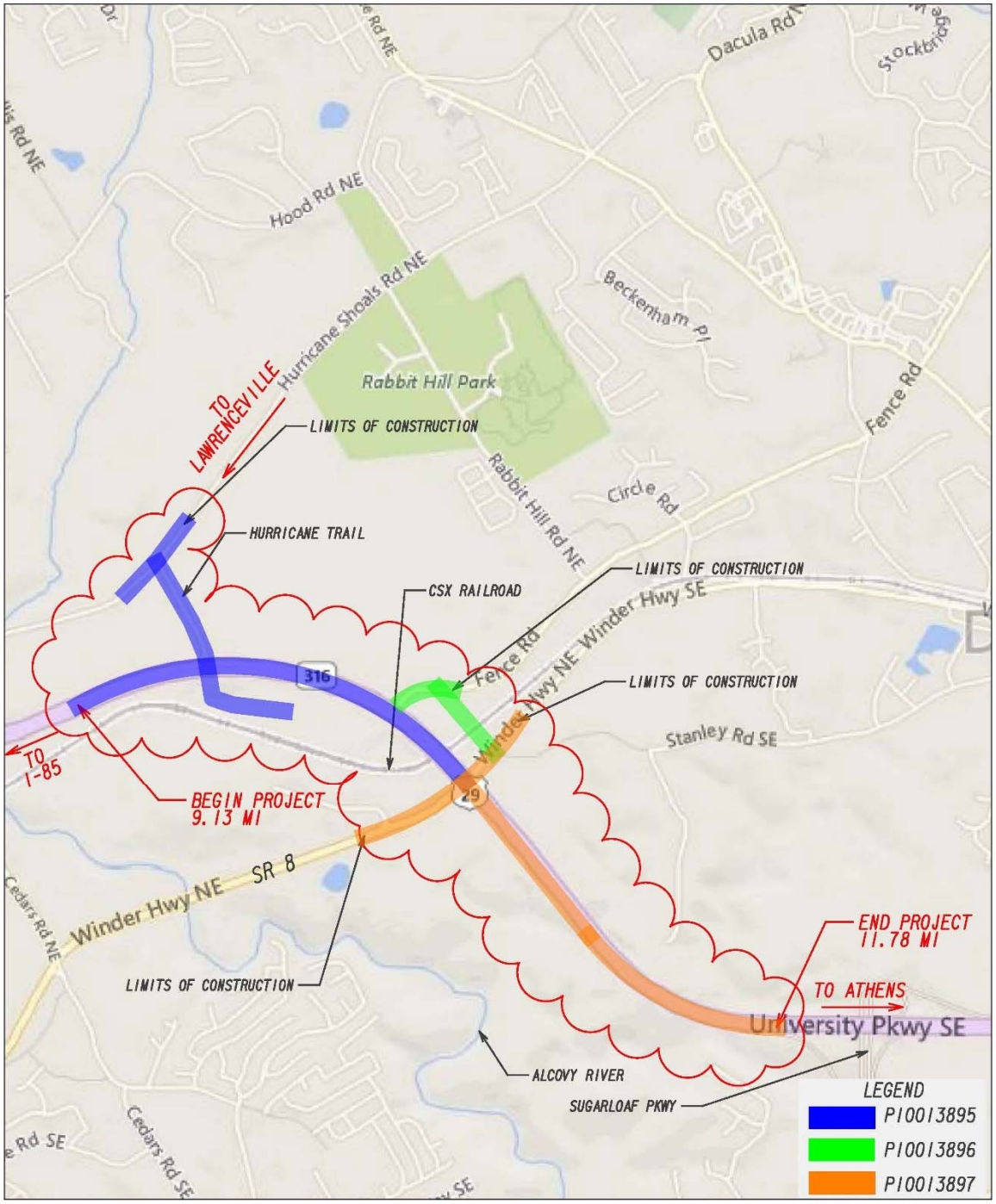

PLANNING AND BACKGROUND

Project Justification Statement:
See Attachment 1

Existing conditions:
SR 316: It is a four-lane divided arterial with two 12-foot travel lanes in each direction, left turn lanes at 3 at-grade intersections, 10-foot wide outside shoulders, 6-foot wide inside shoulders, and open drainage ditches. The depressed median width is 64' from the beginning of the project to the US 29/SR 8 Winder Hwy intersection. The median width is reduced to 44' east of the US 29/SR 8 Winder Hwy intersection. The facility has a functional classification as an urban principal arterial providing access to and from the City of Dacula to the north, Lawrenceville to the south, Athens to the east and Interstate 85 to the west. SR 316 in the project area is a limited access facility with signalized at-grade intersections at Hurricane Trail and US 29/SR 8 Winder Hwy with access points provided for commercial driveway openings. Colonial Pipeline has two pipelines, 36 in. and 40 in. diameter, which cross SR 316 near the eastern terminus of the project.

Hurricane Trail: It is a three-lane urban roadway with two 12-foot travel lanes, one northbound 12-foot right turn lane, and closed drainage system with no sidewalk. It is classified as a local road with four access points to commercial properties including the Publix-Atlanta Warehouse and Distribution Center connecting Hurricane Shoals Road to SR 316. It has direct access to SR 316 EB and WB at the signalized at-grade intersection.

US 29/SR 8 Winder Hwy: An undivided two to three-lane roadway with 12-foot travel lanes, right and left turn lanes in each direction, rural shoulder section with open drainage ditches on the EB side, and urban curb and gutter section with closed drainage on the WB side with developed commercial properties. It is classified as a minor arterial providing access from the City of Dacula to the north and the City of Lawrenceville to the south. It has direct access to SR 316 EB and WB at the signalized at-grade intersection.

Fence Road: An undivided two-lane urban roadway with 14-foot travel lanes, closed drainage system and no sidewalk. It is classified as a major collector providing access to and from the city of Dacula to the north and SR 316 to the south. Fence Road has direct access to SR 316 at the Reduced Conflict U-Turn (RCUT) intersection.

Hurricane Shoals Road: It is a two-lane roadway with 12-foot travel lanes and rural shoulder sections and open drainage ditches. It is classified as a local road with a stop-controlled T intersection with Hurricane Trail.

Other projects in the area:
PI 0013325 – Fiber optic cable installation for traffic signal optimization from Hi-Hope Road to Barrow County line. (Estimated construction completion date October 2019)

PI 0006924 - Sugarloaf Parkway Extension – Phase II from I-85 to SR 316. This project has been coordinated with the Sugarloaf Parkway Extension interchange on SR 316 to determine limits and future ramp connections. (CST 2052)

PI 0013893 – New grade separated interchange on SR 316 at Hi-Hope Road with a collector distributor system from SR 20 to Cedars Road. Progress Center Avenue and Airport Road access to SR 316 will be closed as part of this project. (CST 2022)

PI 0013894 – This project will close the existing median break and convert Cedars Road on the northside of SR 316 to exit and entry ramps onto SR 316. Southside Cedar Road will be closed just south of the CSX Railroad crossing with a new cul-de-sac. (CST 2022)

PI 0006937 – Add one general purpose lane in each direction on SR 316 from Cedars Road to Drowning Creek Road. Bridges and ramps will be designed to accommodate future improvements of this long-range program project. (CST 2051)

Future long-range project in the area: GDOT long range program includes adding managed lane and general-purpose lane on SR 316 in each direction from Collins Hill Road to Harbins Road. The proposed project will be designed to accommodate GDOT long range program of this corridor. Bridges, ramps, CD lanes will be designed to allow for future managed lanes and general-purpose lanes construction in the median of the proposed project.

MPO: Atlanta Regional Commission **TIP #:** GW-394- (0013897)
(0013895,96) Will be added February 2020

Congressional District(s): 7 & 10

Federal Oversight: ☐ PoDI ☐ Exempt ☒ State Funded ☐ Other

Projected Traffic: AADT 24 HR T: 9 %
Current Year (2017): 46,650 Open Year (2026): 56,325 Design Year (2046): 65,800
Traffic Projections Performed by: Atkins
Date approved by the GDOT Office of Planning: 1/25/19

AASHTO Functional Classification (Mainline): Urban Freeway and Expressway

AASHTO Context Classification (Mainline): *Suburban*

AASHTO Project Type (Mainline): *Reconstruction*

Complete Streets - Bicycle, Pedestrian, and/or Transit Standard Warrants:
Warrants met: ☐None ☐ Bicycle ☐Pedestrian ☒Transit

Georgia Regional Transportation Authority (GRTA) Xpress route 416 currently begins at a park and ride lot at the corner of Dacula Road and Hebron Church Road and terminates in downtown Atlanta. GRTA bus uses Fence Road and SR 316 en route to I-85.

Is this a 3R (Resurfacing, Restoration, & Rehabilitation) Project? ☒ No ☐ Yes

Pavement Evaluation and Recommendations
Initial Pavement Evaluation Summary Report Required? ☒ No ☐ Yes
Feasible Pavement Alternatives: ☐ HMA ☐ PCC ☒ HMA & PCC

DESIGN AND STRUCTURAL

Description of the proposed project:
The proposed project would construct two grade-separated interchanges on SR 316 at the existing at-grade intersections of Hurricane Trail and US 29/SR 8 Winder Hwy. The at-grade intersection of Fence Road will be closed. A new bridge crossing over CSX Railroad and a roadway connection to US 29/SR 8 Winder Hwy to SR 316 will be constructed to provide access to SR 316 via Fence Road. Additionally, two new bridges will be built to span EB and WB SR 316 over CSX Railroad. The proposed project would construct future C-D roadways and utilize them as mainline SR 316 EB and WB until future traffic demands require construction of future thru lanes. The proposed mainline section would consist of two 12-foot travel lanes in each direction, maximum 218-ft 6-in depressed grassed median (future mainline SR 316 EB and WB), 14-foot wide outside shoulders (12-foot paved and 2-foot grass) and 12-foot wide inside shoulders (10-foot paved and 2-foot grass). Due to the state funding allocation, the project has been divided into the following Georgia Department of Transportation (GDOT) projects:

PI Number 0013895
This project includes the construction of SR 316 east of Cedars Road to approximately 0.2 mile east of the existing Fence Road access to SR 316. This section of limited access arterial includes the interchange at Hurricane Trail, Hurricane Shoals Road and the private road to provide access for the commercial property (Goodwin Ammonia Company) within the project limits. The Hurricane Trail Bridge will span over existing SR

316 and the proposed C-D lanes. The Hurricane Trail at SR 316 interchange is a partial diamond/clover interchange configuration. The clover portion of the interchange, north side of SR 316, utilizes undeveloped property to provide key movements while limiting displacements to commercial developments. In the same way, the diamond portions south side of SR 316, provides a compact interchange format to provide access between existing SR 316 and the CSX rail line/yard to the south. SR 316 will remain approximately at its current grade and requires two bridges (SR 316 EB and WB) spanning over CSX Railroad. Hurricane Trail will be raised approximately 27 ft and widened to include two – 12-foot travel lanes with a flush 14-foot median. The project length is approximately 1.4 miles.

PI Number 0013896

This project includes the closure of the existing Fence Road intersection with SR 316 and construction of Fence Road Connector between existing Fence Road to the west and the ramp terminus of SR 316 ramps with US 29/SR 8 Winder Hwy to the east. Fence Road Connector aligns with the existing QT driveway access to US 29/SR 8 Winder Hwy. The Fence Road Connector Bridge will span over existing CSX Railroad. MSE walls will be used at both bridge approaches due to the alignment proximity to the existing cemetery and businesses. The project length is approximately 0.2 mile.

PI Number 0013897

This project includes the construction of SR 316 just east of Fence Road to west of Sugarloaf Parkway interchange. This section of limited access arterial includes the interchange at US 29/SR 8 Winder Hwy and reconstruction of Stanley Road to close access to US 29/SR 8 Winder Hwy. The SR 316 interchange with US 29/SR 8 Winder Hwy is an east facing clover interchange due to the existing CSX railroad line to the west. US 29 / SR 8 Winder Hwy will be raised approximately 28 ft, requiring a bridge to span over SR 316. MSE walls will be used at both US 29 / SR 8 Winder Hwy bridge approaches. One new bridge (SR 316 EB) will be constructed to span C-D lanes over existing Colonial Pipeline crossing. The project length is approximately 1.0 miles.

Major Structures:

Structure	Existing	Proposed
PI 0013895: Hurricane Trail overpass	N/A	Bridge length = 393 ft Bridge width =56 ft (2-12-ft lanes with 14-ft flush median, 10-ft border area including 5.5-ft sidewalk on both sides)
PI 0013895: SR 316 EB overpass at CSX Railroad	N/A	Bridge length = 144 ft Bridge width =62 ft (3-12-ft lanes, 12-ft outside shoulder, 10 ft inside shoulder)
PI 0013895: SR 316 WB overpass at CSX Railroad	N/A	Bridge length = 136 ft Bridge width =63 ft / 66 ft (3-12-ft lanes with ramp taper, 12-ft outside shoulder, 10-ft inside shoulder)
PI 0013895: Box culvert east of Hurricane Trail	7 ft x 7 ft box culvert	Extend box culvert between SR 316 EB and Ramp K (length TBD)
PI 0013895: SR 316 WB overpass at 7 ft x 7 ft box culvert	N/A	Bridge length = 138 ft Bridge width =61 ft (3-12-ft lanes with ramp taper, 12-ft outside shoulder, 10-ft inside shoulder)
PI 0013895: MSE wall SR 316 WB at Hurricane Trail (Wall 1)	N/A	Wall length = 636 ft Wall height = TBD

PI 0013895: MSE wall at Hurricane trail NB (Wall 2)	N/A	Wall length = 336 ft Wall height = TBD
PI 0013895: Concrete side barrier at SR 316 WB (Wall 3)	N/A	Wall length = 486 ft Wall height = TBD
PI 0013895: MSE wall SR 316 EB at west of CSX Railroad (Wall 5)	N/A	Wall length = 142 ft Wall height = TBD
PI 0013895: MSE wall SR 316 WB at west of CSX Railroad (Wall 4)	N/A	Wall length = 137 ft Wall height = TBD
PI 0013896: Fence Road Connector overpass	N/A	Bridge length = 171 ft Bridge width =56 ft (2-12-ft lanes with 14-ft flush median, 5.5-ft sidewalk on both sides)
PI 0013896: MSE wall LT at Fence Road Connector (Wall 12)	N/A	Wall length = 165 ft Wall height = TBD
PI 0013896: MSE wall RT at Fence Road Connector (Wall 13)	N/A	Wall length = 168 ft Wall height = TBD
PI 0013897: SR 316 EB overpass at Colonial Pipeline	N/A	Bridge length = 421 ft Bridge width =57 ft / 65 ft (3-12-ft lanes with ramp taper, 12-ft outside shoulder, 10-ft inside shoulder)
PI 0013897: US 29 / SR 8 Winder Hwy overpass at SR316	N/A	Bridge length = 367 ft Bridge width = 110 ft (6-12-ft lanes with 20-ft raised median, 5.5-ft sidewalk on both sides)
PI 0013897: MSE wall LT at Winder Hwy south of SR 316 (Wall 8)	N/A	Wall length = 583 ft Wall height = TBD
PI 0013897: MSE wall LT at Winder Hwy north of SR 316 (Wall 9)	N/A	Wall length = 738 ft Wall height = TBD
PI 0013897: MSE wall SR 316 EB at Winder Hwy (Wall 6)	N/A	Wall length = 570 ft Wall height = TBD

PI 0013897: MSE wall SR 316 WB at Winder Hwy (Wall 7)	N/A	Wall length = 468 ft Wall height = TBD
PI 0013897: MSE wall SR 316 EB at west of Colonial Pipeline (Wall 10)	N/A	Wall length = 146 ft Wall height = TBD
PI 0013897: MSE wall SR 316 EB at east of Colonial Pipeline (Wall 11)	N/A	Wall length = 138 ft Wall height = TBD
PI 0013897: Box Culvert at Winder Hwy north of Fence Road Connector	Double 4 ft x 4 ft box culvert	Extend box culvert (length TBD)

Accelerated Bridge Construction (ABC) techniques anticipated: ☒ No ☐ Yes
ABC is not anticipated since there will be an on-site detour for Winder Hwy. Hurricane Trail access to SR 316 will be closed for the construction of the CD lanes. The other 4 bridges (on SR 316 and on Fence Road Connector) will be constructed on new locations away from existing traffic.

Is the project located on a NHS roadway? ☐ No ☒ Yes

Is the project located on a Special Roadway or Network? ☐ No ☒ Yes STRAHNET Connectors
Statewide Freight Corridor
Oversize Truck Route

Mainline Design Features: SR 316 (University Parkway) – Freeway

Feature	Existing	Policy	Proposed
Typical Section:			
- Number of Lanes	4		4
- **Lane Width(s)**	**12-ft**	**11-12-ft**	**12-ft**
- **Median Width & Type**	**64-ft Depressed** **44-ft Depressed**	**44-ft Depressed**	**Varies** **44-ft – 218-ft-6in**
- **Outside Shoulder Width**	**10-ft (6-ft Paved)**	**14-ft (12-ft Paved)**	**14-ft (12-ft Paved)**
- **Outside Shoulder Slope**	**6%**	**6%**	**6%**
- **Inside Shoulder Width**	**6-ft (4-ft paved)**	**12-ft (10-ft paved)**	**12-ft (10-ft paved)**
- **Sidewalks**	**N/A**	**N/A**	**N/A**
- Auxiliary Lanes	N/A		1 EB/1 WB–12-ft
- **Bike Accommodation**	**N/A**	**N/A**	**N/A**
Posted Speed	55 mph		55 mph
Design Speed	**N/A**	**65 mph**	**65 mph**
Minimum Horizontal Curve Radius	**2852-ft**	**1660-ft**	**2230-ft**
Maximum Superelevation Rate	**8%**	**6%**	**5.6%**
Maximum Grade	**5%**	**4%**	**4%**
Access Control	Limited	**Limited**	Limited
Design Vehicle	WB-50	**WB-67**	WB-67
Check Vehicle	WB-50		WB-67
Pavement Type	Asphalt / PCC		Asphalt / PCC

Design Feature of Other Major Roads: Hurricane Trail – Urban Local Road

Feature	Existing	Policy	Proposed
Typical Section:			
- Number of Lanes	3		Varies 2 - 4
- **Lane Width(s)**	**12-ft**	**10-ft – 12-ft**	**12-ft**
- **Median Width & Type**	**N/A**	**N/A**	**Varies 0-ft – 14-ft flush**
- **Border Area Width**	**8-ft – 10-ft**	**10-ft – 16-ft**	**Varies 10-ft - 12-ft**
- **Outside Shoulder Slope**	**4% - 8%**	**2%**	**2%**
- **Sidewalks**	**5-ft**	**5-ft**	**5-ft**
- Auxiliary Lanes	N/A		N/A
- **Bike Accommodation**	**N/A**	**4-ft**	**None**
Posted Speed	35 mph		35 mph
Design Speed	**N/A**	**25 – 35 mph**	**25 - 35 mph**
Minimum Horizontal Curve Radius	**900-ft**	**154-ft – 371-ft**	**173-ft**
Maximum Superelevation Rate	**4%**	**4%**	**4%**
Maximum Grade	**7%**	**11 – 12%**	**6%**
Access Control	Permitted	**Permitted**	Permitted
Design Vehicle	WB-50	**SU or P**	WB-67
Check Vehicle	WB-50		WB-67
Pavement Type	Asphalt		Asphalt

Design Feature of Other Major Roads: Hurricane Shoals Road – Urban Local Road

Feature	Existing	Policy	Proposed
Typical Section:			
- Number of Lanes	2		Varies 2 - 3
- **Lane Width(s)**	**12-ft**	**11-ft – 12-ft**	**12-ft**
- **Median Width & Type**	**N/A**	**N/A**	**Varies 0-ft – 12-ft flush**
- **Outside Shoulder Width** **Border Area Width**	**12-ft (2-ft paved)** **N/A**	 **10-ft – 16-ft**	 **Varies 10-ft–15-ft**
- **Outside Shoulder Slope**	**2% - 8%**	**2%**	**2%**
- **Inside Shoulder Width**	**N/A**	**N/A**	**N/A**
- **Sidewalks**	**5-ft**	**5-ft**	**5-ft**
- Auxiliary Lanes	N/A		N/A
- **Bike Accommodation**	**N/A**	**4-ft**	**None**
Posted Speed	45 mph		45 mph
Design Speed	**N/A**	**45 mph**	**45 mph**
Minimum Horizontal Curve Radius	**1600-ft**	**711-ft**	**1580-ft**
Maximum Superelevation Rate	**4%**	**4%**	**3.2%**
Maximum Grade	**5%**	**10%**	**6%**
Access Control	Permitted	**Permitted**	Permitted
Design Vehicle	WB-50	**SU or P**	WB-50
Check Vehicle	WB-50		WB-50
Pavement Type	Asphalt		Asphalt

Design Feature of Other Major Roads: US 29/SR 8 Winder Hwy – Urban Minor Arterial

Feature	Existing	Policy	Proposed
Typical Section:			
- Number of Lanes	Varies 2 - 3		Varies 2 - 4
- **Lane Width(s)**	**12-ft**	**11-ft – 12-ft**	**12 ft**
- **Median Width & Type**	**12-ft flush**	**20-ft raised** **14-ft flush**	**Varies 0-ft – 20 ft flush/raised**
- **Outside Shoulder Width** **Border Area Width**	**8-ft (2-ft paved)** **12-ft**	**8-ft (4-ft paved)** **10-ft – 16-ft**	**8-ft (4-ft paved)** **12-ft**
- **Outside Shoulder Slope**	**2% - 8%**	**2% - 6%**	**2% - 6%**
- **Inside Shoulder Width**	**N/A**	**N/A**	**N/A**
- **Sidewalks**	**5-ft**	**5-ft**	**5-ft**
- Auxiliary Lanes	1 SB – 12-ft		1 NB/1 SB -12-ft
- **Bike Accommodation**	**N/A**	**4-5-ft**	**None**
Posted Speed	45 mph		45 mph
Design Speed	**N/A**	**45 mph**	**45 mph**
Minimum Horizontal Curve Radius	**1942-ft**	**711-ft**	**1942-ft**
Maximum Superelevation Rate	**3%**	**4%**	**3%**
Maximum Grade	**7%**	**7%**	**7%**
Access Control	Permitted	**Permitted**	Permitted
Design Vehicle	WB-50	**WB-40 or WB-67**	WB-67
Check Vehicle	WB-50		WB-67

Design Feature of Other Major Roads: Fence Road Connector – Urban Collector Street

Feature	Existing	Policy	Proposed
Typical Section:			
- Number of Lanes	N/A		2
- **Lane Width(s)**	**N/A**	**11-ft – 12-ft**	**12-ft**
- **Median Width & Type**	**N/A**	**N/A**	**14-ft flush**
- **Border Area Width**	**N/A**	**10-ft – 16-ft**	**10-ft**
- **Outside Shoulder Slope**	**N/A**	**2%**	**2%**
- **Inside Shoulder Width**	**N/A**	**N/A**	**N/A**
- **Sidewalks**	**N/A**	**5-ft**	**None**
- Auxiliary Lanes	N/A		N/A
- **Bike Accommodation**	**N/A**	**4-5-ft**	**None**
Posted Speed	N/A		25 mph
Design Speed	**N/A**	**25 mph**	**25 mph**
Minimum Horizontal Curve Radius	**N/A**	**154-ft**	**211-ft**
Maximum Superelevation Rate	**N/A**	**4%**	**4%**
Maximum Grade	**N/A**	**12%**	**9%**
Access Control	N/A	**Permitted**	Permitted
Design Vehicle	N/A	**BUS-40 or SU**	WB-50
Check Vehicle	N/A		WB-50
Pavement Type	N/A		Asphalt

Design Feature of Other Major Roads: Direct Ramps and Stop Controlled Loop Ramps – Freeway Ramps

Feature	Existing	Policy	Proposed
Typical Section:			
- Number of Lanes	N/A		Varies 1 - 3
- **Lane Width(s)**	**N/A**	**16-ft**	**Varies 12-ft–16-ft**
- **Median Width & Type**	**N/A**	**N/A**	**N/A**
- **Outside Shoulder Width**	**N/A**	**12-ft (10-ft paved)**	**12-ft (10-ft paved)**
- **Outside Shoulder Slope**	**N/A**	**4%**	**4%**
- **Inside Shoulder Width**	**N/A**	**8-ft with 4-ft paved**	**8-ft with 4-ft paved**
- **Sidewalks**	**N/A**	**N/A**	**N/A**
- Auxiliary Lanes	N/A		N/A
- **Bike Accommodation**	**N/A**	**N/A**	**N/A**
Posted Speed	N/A		25 - 55 mph
Design Speed	**N/A**	**25 - 55 mph**	**25 - 55 mph**
Minimum Horizontal Curve Radius	**N/A**	**134-ft**	**198-ft**
Maximum Superelevation Rate	**N/A**	**8%**	**7.4%**
Maximum Grade	**N/A**	**6%**	**6%**
Access Control	N/A	**Limited**	Limited
Design Vehicle	N/A	**WB-67**	WB-67
Check Vehicle	N/A		WB-67
Pavement Type	N/A		Asphalt / PCC

Design Exceptions/Design Variances to FHWA or GDOT Controlling Criteria anticipated:

FHWA or GDOT Controlling Criteria	No	Undetermined	Yes	DE or DV	Approval Date (if applicable)
1. Design Speed	☒	☐	☐		
2. Design Loading Structural Capacity	☒	☐	☐		
3. Stopping Sight Distance	☒	☐	☐		
4. Horizontal Curve Radius	☒	☐	☐		
5. Maximum Grade	☒	☐	☐		
6. Vertical Clearance	☒	☐	☐		
7. Superelevation Rate	☒	☐	☐		
8. Lane Width	☒	☐	☐		
9. Cross Slope	☒	☐	☐		
10. Shoulder Width	☒	☐	☐		

Design Variances to GDOT Standard Criteria anticipated:

GDOT Standard Criteria	Reviewing Office	No	Undetermined	Yes	Approval Date (if applicable)
1. Access Control	DP&S	☒	☐	☐	
2. Shoulder Width	DP&S	☒	☐	☐	
3. Intersection Sight Distance	DP&S	☒	☐	☐	
4. Intersection Skew Angle	DP&S	☒	☐	☐	
5. Tangent Lengths on Reverse Curves	DP&S	☒	☐	☐	
6. Lateral Offset to Obstruction	DP&S	☒	☐	☐	
7. Rumble Strips	DP&S	☒	☐	☐	
8. Safety Edge	DP&S	☒	☐	☐	
9. Median Usage	DP&S	☒	☐	☐	
10. Roundabout Illumination Levels	DP&S	☒	☐	☐	
11. Complete Streets Warrants	DP&S	☒	☐	☐	
12. ADA Requirements in PROWAG	DP&S	☒	☐	☐	
13. GDOT Construction Standards	DP&S	☒	☐	☐	
14. GDOT Drainage Manual	DP&S	☒	☐	☐	

VE Study anticipated: ☐ No ☐ Yes ☒ Completed – Date: 8/20/2018

Lighting Required: ☒ No ☐ Yes

Off-site Detours Anticipated: ☐ No ☐ Undetermined ☒ Yes
If yes: Roadway type to be closed: ☒ Local Road ☐ State Route
Detour Route selected: ☒ Local Road ☐ State Route
District Concurrence w/Detour Route: ☒ No/Pending ☐ Received *Select a date*

For the construction of US 29/SR 8 Winder Hwy over SR 316, traffic will be maintained by use of an on-site detour. The US 29/SR 8 Winder Hwy detour will be a 2-4 lane section with 11 ft lanes and will require a temporary signal. The temporary intersection will be constructed approximately 130 ft south of the existing US 29/SR 8 Winder Hwy / SR 316 intersection.

The existing Hurricane Trail access to SR 316 will be closed permanently. Local traffic will be detoured to Hurricane Shoals Road during construction of the interchange. The Goodwin Ammonia Company driveways will remain open during stage 1 construction of the interchange. The east driveway will be widened with temporary pavement for two-way traffic. The west driveway will be closed in stage 2 to complete Ramp K and the gap on the CD at this location. Traffic will use the east driveway to access the business. Temporary tie-in from the CD to existing SR 316 will be constructed at this time. The east driveway will be closed in stage 3 to finish the section of the CD at this location. Traffic will use the newly constructed Hurricane Trail interchange and the temporary tie-in to access SR 316 EB.

Transportation Management Plan [TMP] Required: ☐ No ☒ Yes
If Yes: Project classified as: ☐ Non-Significant ☒ Significant
TMP Components Anticipated: ☒ TTC ☒ TO ☒ PI

INTERSECTIONS AND INTERCHANGES

Interchanges/Major Intersections:
Interchanges - SR 316 at Hurricane Trail, SR 316 at US 29 / SR 8 / Winder Hwy

Intersections with proposed traffic signals –
US 29 / SR 8 / Winder Hwy at SR 316 WB off ramp / on ramp / Fence Road Connector
US 29 / SR 8 / Winder Hwy at SR 316 EB off ramp / on ramp

Hurricane Trail at SR 316 WB off ramp / on ramp
Hurricane Trail at SR 316 EB off ramp / on ramp
Hurricane Trail at Hurricane Shoals Road

Intersections without traffic signals –
Fence Road Connector at Fence Road
US 29 / SR 8 / Winder Hwy at Alcovy Industrial Boulevard

Intersection Control Evaluation (ICE) Required: ☐ No ☒ Yes

Roundabout Concept Validation Required: ☒ No ☐ Yes ☐ Completed – Date:

UTILITY AND PROPERTY

Railroad Involvement:
CSX Transportation – SR 316 EB, SR 316 WB and Fence Road Connector will be bridged over the railroad track of CSXT located near US 29/SR 8 Winder Hwy. This will involve flagging and other coordination efforts with CSXT during the construction of these bridges. The CSX contact is Todd Allton, todd_allton@csx.com

Utility Involvements:

Electric	Georgia Power Corp Jackson EMC
Gas	Colonial Pipeline Co City of Lawrenceville Williams-Transco Gas Pipeline
Sewer	Gwinnett County Sewer
Water	Gwinnett County Water
Telephone	AT&T
Cable TV	Comcast
Other	CSX Transportation Georgia Regional Transportation Authority (GRTA) GDOT ATMS / ITS

SUE Required: ☐ No ☒ Yes ☐ Undetermined

Public Interest Determination Policy and Procedure recommended: ☒No ☐Yes

Right-of-Way (ROW):
Mainline - Existing width: 300 – 360 ft. Proposed width: 360 – 650 ft.
Sideroad - Existing width: 30 – 158 ft. Proposed width: 80 – 160 ft.

Required Right-of-Way anticipated: ☐None ☒Yes ☐Undetermined

Easements anticipated: ☐None ☒Temporary ☒Permanent * ☐Utility ☐Other

***** *Permanent easements will include the right to place utilities.*

PI Number 0013895

Anticipated total number of impacted parcels:		9
	Businesses:	
Displacements anticipated:	Residences:	
	Other:	
	Total Displacements:	0

PI Number 0013896

Anticipated total number of impacted parcels:		1
	Businesses:	
Displacements anticipated:	Residences:	
	Other:	
	Total Displacements:	0

PI Number 0013897

Anticipated total number of impacted parcels:		14
	Businesses:	
Displacements anticipated:	Residences:	
	Other:	
	Total Displacements:	0

Location and Design approval: ☐ Not Required ☒ Required

Impacts to USACE property anticipated: ☒ No ☐ Yes ☐ Undetermined

CONTEXT SENSITIVE SOLUTIONS

Issues of Concern: None

Context Sensitive Solutions Proposed: None

ENVIRONMENTAL & PERMITS

Anticipated Environmental Document: **GEPA ~ None**

Level of Environmental Analysis:

☒ The environmental considerations noted below are based on preliminary desktop or screening level environmental analysis and are subject to revision after the completion of resource identification, delineation, and agency concurrence.

☐ The environmental considerations noted below are based on the completion of resource identification, delineation, and agency concurrence.

Water Quality Requirements:
MS4 Permit Compliance – Is the project located in a MS4 area? ☐ No ☒ Yes

Is Non-MS4 water quality mitigation anticipated? ☒ No ☐ Yes

Environmental Permits/Variances/Commitments/Coordination anticipated

Permit/Variance/Commitment/ Coordination Anticipated	No	Yes	Remarks
1. U.S. Coast Guard Permit	☒	☐	
2. Forest Service/NPS	☒	☐	
3. CWA Section 404 Permit	☐	☒	For anticipated water impacts located in the project area
4. Tennessee Valley Authority Permit	☒	☐	
5. USACE Real Estate Outgrant	☒	☐	
6. Buffer Variance	☐	☒	For anticipated non-exempt buffer impacts
7. Coastal Zone Management Coordination	☒	☐	
8. NPDES	☐	☒	
9. FEMA	☒	☐	
10. Cemetery Permit	☒	☐	
11. Other Permits	☒	☐	
12. Other Commitments	☒	☐	
13. Other Coordination	☒	☐	

Is a PAR required? ☒ No ☐ Yes ☐ Completed – Date:

Environmental Comments and Information:

NEPA/GEPA: None

Ecology: Early coordination with the United States Field and Wildlife Service and Georgia Department of Natural Resources was completed on June 20, 2017. Desktop research and field surveys to identify ecological resources were completed on July 5, 2018. A total of 12 perennial streams, 11 intermittent streams, 6 wetlands, and 3 open waters have been identified within the survey area. State waters determination letter from the Environmental Protection Division (EPD) was received on July 19, 2018. Field surveys identified habitats for the state protected pink ladyslipper (*Cypripedium acaule*) and Piedmont barren strawberry (*Waldsteinia lobata*). Field surveys conducted on July 5, 2018 identified no pink ladyslipper and one Piedmont barren strawberry specimen within the survey area. No additional field surveys are anticipated.

History: Early coordination with the Historic Preservation Division (HPD) was completed on November 15, 2017. A total of 8 historic resources are recommended ineligible, and 1 historic resource (CSX Railroad) is recommended eligible. A Historic Resource Survey Report was approved by GDOT on May 4, 2018. The report was not transmitted to SHPO due to the project being state-funded and U.S. Army Corps of Engineers being the lead agency.

Archeology: Pleasant Hill Cemetery is located within the project limits. No impact to the site is expected. A field survey will be needed to determine if additional archaeological resources exist in the area.

Air Quality:
Is the project located in an Ozone Non-attainment area? ☐ No ☒ Yes TIP GW-394
Is a Carbon Monoxide hotspot analysis required? ☐ No ☒ Yes

Noise Effects: A standalone noise assessment is not required for this project. The only historic resource considered eligible for the project is the railroad, for which noise levels are not required in order to determine effects. The HRSR has recommended the Pleasant Hill Cemetery ineligible.

Public Involvement: PIOH to be scheduled

Major stakeholders: Business owners, property owners, and travelling public, City of Dacula, Gwinnett County Chamber of Commerce, Georgia Regional Transportation Authority (GRTA), Gwinnett County Airport.

CONSTRUCTION

Issues potentially affecting constructability/construction schedule: US 29 / SR 8 Winder Hwy will be raised and span over SR 316. An on-site detour with a signalized intersection south of the construction zone will be needed to maintain US 29 / SR 8 Winder Hwy traffic during construction. Coordination with local businesses will be needed during construction to reduce impact.

Early Completion Incentives recommended for consideration: ☒ No ☐ Yes

COORDINATION, ACTIVITIES, RESPONSIBILITIES, AND COSTS

Federal Aviation Administration (FAA) coordination anticipated: ☐No ☒ Yes
(Airspace analysis will be required for the project once design is to a point where structure elevations are known. This will include top elevation of the bridge spans, and traffic signal pole heights. In addition, the design will need to include a note that the contractor will need to submit a case for planned equipment heights. For example, cranes for bridge beam and signal pole installs once their means and methods are determined and the contractor will need to notify the airport prior to commencing field work and provide duration times the cranes will be in use.)

Initial Concept Team Meeting: January 23, 2018 – See attachment 13 for summary.

Concept Team Meeting: March 14, 2019 – See attachment 13 for summary.

Other coordination to date: TBD

Project Activity	Party Responsible for Performing Task(s)
Concept Development	Atkins
Design	Atkins
Right-of-Way Acquisition	Gwinnett County
Utility Coordination (Preconstruction)	Gwinnett County/GDOT
Utility Relocation (Construction)	Utility Owners
Letting to Contract	GDOT
Construction Supervision	GDOT
Providing Material Pits	Contractor
Providing Detours	Contractor
Environmental Studies, Documents, & Permits	MAAI
Environmental Mitigation	MAAI
Construction Inspection & Materials Testing	GDOT

Project Cost Estimate Summary and Funding Responsibilities:
PI Number 0013895

	PE Activities		ROW	Reimbursable Utilities	CST*	Total Cost
	PE Funding	Section 404 Mitigation				
Programmed Cost:	GDOT $288,800		$7,000,000	$4,000,000	$43,500,000	$54,788,800
Funded By:	GDOT	GDOT	GDOT	GDOT	GDOT	
Estimated Amount:	$288,800	$854,976	$6,056,000	$1,434,000	$51,927,049	$60,560,825
Date of Estimate:	2017	11/14/2019	3/18/2019	6/21/2019	11/06/2019	
Cost Difference:	$0		-$944,000	-$2,566,000	$8,427,049	$4,917,049

PI Number 0013896

	PE Activities		ROW	Reimbursable Utilities	CST*	Total Cost
	PE Funding	Section 404 Mitigation				
Programmed Cost:	GDOT $168,000		$3,000,000	$400,000	$5,000,000	$8,568,000
Funded By:	GDOT	GDOT	GDOT	GDOT	GDOT	
Estimated Amount:	$168,000	$0	$891,000	$733,500	$5,845,709	$7,638,209
Date of Estimate:	2017	11/14/2019	3/18/2019	6/21/2019	11/05/2019	
Cost Difference:	$0		-$2,109,000	$333,500	$845,709	-$929,791

PI Number 0013897

	PE Activities		ROW	Reimbursable Utilities	CST*	Total Cost
	PE Funding	Section 404 Mitigation				
Programmed Cost:	GDOT $4,516,000		$18,000,000	$4,000,000	$47,000,000	$73,516,000
Funded By:	GDOT	GDOT	GDOT	GDOT	GDOT	
Estimated Amount:	$4,516,000	$641,688	$11,429,000	$1,599,200	$49,021,383	$67,207,271
Date of Estimate:	2017	11/14/2019	3/18/2019	4/24/2019	11/05/2019	
Cost Difference:	$0		-$6,571,000	-$2,400,800	$2,021,383	-$6,950,417

*CST Cost includes: Construction, Engineering and Inspection, Contingencies and Liquid AC Cost Adjustment.

ALTERNATIVES DISCUSSION

Alternative selection:

Preferred Alternative: This alternative would include the construction of interchanges at Hurricane Trail/SR 316, US 29/SR 8 Winder Hwy/SR 316, C-D lanes between the new interchanges, and a new 3-lane flush median roadway to connect existing Fence Road to US 29/SR 8 Winder Hwy.			
Estimated Property Impacts:	**(0013895) 9 Impacts - $6,056,000** **(0013896) 1 Impact - $891,000** **(0013897) 14 Impacts - $11,429,000**	**Estimated Total Cost:**	**(0013895)-$ 60,560,825** **(0013896)- $7,638,209** **(0013897)- $67,207,271**
Estimated ROW Cost:	**$18,376,000**	**Estimated CST Time:**	**3 years**
Rationale: This alternative closely follows a corridor of state/county owned properties which reduces R/W costs and minimizes impacts to established commercial and industrial developments by maintaining existing side road alignments.			

No-Build Alternative: Maintain existing at grade intersections on SR 316 at Hurricane Trail, Fence Road and US 29/SR 8 Winder Hwy within the project limits.			
Estimated Property Impacts:	**0**	**Estimated Total Cost:**	**0**
Estimated ROW Cost:	**0**	**Estimated CST Time:**	**0**
Rationale: It is eliminated as it does not address the safety and operational problems within the project limits. Additionally, existing roadways would be inadequate to handle the future year 2044 traffic volumes.			

Alternative 1: This alternative is like the preferred alternative at the Hurricane Trail/SR 316 interchange. At the SR 8/Winder Hwy interchange, this alternative would bridge SR 316 over SR 8/Winder Hwy and CSX Railroad in order to maintain SR 8 at grade. Fence Road Connector would still be necessary to provide connection from Fence Road to SR 316.			
Estimated Property Impacts:	**(0013895) 9 Impacts - $6,056,000** **(0013896) 1 Impact - $891,000** **(0013897) 14 Impacts $11,311,800**	**Estimated Total Cost:**	**(0013895)-$71,039,274** **(0013896)-$7,638,210** **(0013897)-$61,988,251**
Estimated ROW Cost:	**$18,258,800**	**Estimated CST Time:**	**3 years**
Rationale: This alternative would require more structures to span approximately 1,500 linear feet for both the eastbound and westbound CSX lines and Winder Highway, so the construction cost for bridges and walls increases. While the preferred alternative has a span length of 680 linear feet for both the eastbound and westbound CSX lines and Winder Highway. Additional MSE walls approximately 20 to 30 feet in height would be required for this alternative eliminating the savings of keeping SR 8 at grade. This alternative also has no significant right of way savings as Fence Road Connector would still be required for PI 0013896. This alternative is approximately $5.26M more than the preferred, so it was not considered viable to move forward with.			

Alternative 2: In addition to taking SR 316 over SR 8 Winder Hwy and CSX Railroad as described in Alternative 1, this alternative would realign Fence Road to go under SR 316 running parallel to the existing CSX tracks for approximately 500 feet. The alignment would run parallel along the frontage of the industrial property before connecting to the Hurricane Trail interchange. This alternative would eliminate the Fence Road Connector as described in the Preferred Alternative.			
Estimated Property Impacts:	**(0013895) 9 Impacts - $6,501,500** **(0013896) 1 Impact - $445,500** **(0013897) 14 Impacts - $11,311,800**	**Estimated Total Cost:**	**(0013895)-$73,931,122** **(0013896)-$5,008,836** **(0013897)-$61,988,251**
Estimated ROW Cost:	**$18,258,000**	**Estimated CST Time:**	**3 years**
Rationale: The Fence Road alignment under SR 316 is not feasible due to the proximity to the CSX Railroad and significant impact to the industrial development along the alignment. This alternative adds approximately 400 feet of bridge on SR 316 and corresponding MSE walls to prevent impacts CSX property and drainage, and this alternative would have the same additional structural costs from alternative 1. This alternative would eliminate the need for Fence Road connector; thereby reducing the construction costs for 0013896. However, additional construction cost was added to 0013895 to construct the underpass of Fence Road below SR 316. This alternative increases the construction cost by approximately $5.53M, so it was not considered viable to move forward with.			

Comments: The weaving distance from the eastbound on ramp for Hurricane Trail to the exit ramp for SR 8 Winder Highway meets CD ramp spacing but does not meet freeway ramp spacing. Therefore, the speed change lanes were connected using an auxiliary lane per guidance from the Green Book. During preliminary design, the gore for the eastbound on ramp from Hurricane Trail will be evaluated and modified to maximize the ramp spacing.

LIST OF ATTACHMENTS/SUPPORTING DATA

1. Project Justification Statements
2. Concept Layout
3. Typical Sections
4. Detailed Cost Estimates:
    a. Revisions to Programmed Costs forms & Liquid AC Cost Adjustment forms
    b. Cost Increase Justification Letters
    c. CES Printouts
    d. Right-of-Way Cost Estimates
    e. Preliminary Utility Cost Estimates
    f. Preliminary Railroad Cost Estimates for PI 0013895, PI 0013896
    g. Mitigation Cost Estimates & Costs Approval Letter
5. Concept Utility Report
6. Crash Summaries
7. Design Traffic Diagrams
8. Capacity Analysis Summary
9. Signal Warrant Analysis
10. ICE Reports
    a. Stage 1 Screening Decision Record
    b. Stage 2 Alternative Selection Decision Record
11. S I & A Reports
12. MS4 Concept Report Summary
13. Pavement Evaluation Summary
14. Minutes of Concept Meetings
15. VE Implementation Letter

APPROVALS

Concur: _____ 1-8-2020
Director of Engineering — Date

Approve: Margaret B. Pirkle 1·13·20
Chief Engineer — Date

Attachment 1

Project Justification Statements

DEPARTMENT OF TRANSPORTATION
STATE OF GEORGIA

INTERDEPARTMENTAL CORRESPONDENCE

FILE: PI# 0013895
Gwinnett County

OFFICE: Planning

DATE: July 26, 2017

FROM: Cynthia L. VanDyke, State Transportation Planning Administrator

TO: Kim Nesbitt, State Program Delivery Administrator
Attn: Anthony Tate

SUBJECT: Project Justification Statement – SR 316 from CR 1996/Hurricane Trail to CR 5661/Fence Road

The Office of Planning is providing this Project Justification Statement as defined in the Plan Development Process Manual. This PJS has been updated and includes 2015 crash and traffic data. If any changes occur to the concept, please notify this office immediately. If you have any questions, please call Megan Weiss at 404-631-1779.

CLV:mw

Enclosure

Project Justification Statement
Gwinnett County, PI 0013895
SR 316 from CR 1996/Hurricane Trail to CR 5661/Fence Road

SR 316 is an urban principal arterial that provides east-west access in Gwinnett County; connecting to I-85 in the western portion of the county. SR 316 is four lanes, two in each direction, with partial limited access throughout the corridor. There are multiple distribution centers located along this section of the corridor. The predominant land uses along the corridor are commercial properties and industrial development. SR 316 is identified on the Atlanta Regional Strategic Transportation System (RSTS) by the Atlanta MPO. SR 316 is also identified on the Atlanta Strategic Truck Route Master Plan (ASTRoMaP) and the Regional Thoroughfare Network (RTN), which are networks adopted by the Atlanta MPO, indicating the regional significance of this route.

The purpose of this project is to reduce frequency and severity of crashes as well as reduce congestion on the corridor. The Office of Planning conducted a review of the State Route 316 Corridor Study to determine locations in Gwinnett and Barrow Counties suitable for a new interchange, grade-separated crossing, or an access closure in order to create a freeway-style facility on SR 316. As a result of the review, the Department recently programmed a series of projects on SR 316 from SR 20 in Gwinnett to SR 10 in Athens to create a limited access freeway system.

PI 0013895 includes three at-grade intersections with SR 316: Hurricane Trail, which is a three-way signalized intersection with turn lanes; Fence Road, which is a four-way un-signalized intersection with stop control and turn lanes; and the Goodwin Distribution Center on the South side of SR 316 in between Hurricane Trail and Fence Road with right in, right out entrance and exit ramps. Just north of SR 316 is Hurricane Shoals, which provides an east-west connection to Cedars Road from Hurricane Trail and provides access to commercial properties. SR 8/Winder Highway located just east of Fence Road provides access to Fence Road via Circle Road, for more local, cross connections and access to the Publix Distribution Center.

According to GDOT's Geo Counts 2015 traffic data, the current AADT for this section of SR 316 is 52,700. The corresponding level of service (LOS), as calculated in HCS 2010, is LOS D. This corridor was also analyzed in the Atlanta region's travel demand model (Year 2040, no build) to project future conditions if no changes are made. The projected 2040 (no build) traffic volume for this corridor is 89,980 with a corresponding projected LOS F.

The statewide average crash rate for an urban principal arterial for years 2013, 2014 and 2015 is 336, 363, and 335 per MVM respectively. The crash rates for the corridor for the years 2013, 2014, and 2015 are 255, 286, and 322 MVM respectively. The most common type of collision on the corridor was a rear end collision which represented 23% of all accidents. Rear end collisions are often associated with traffic congestion. Six percent of the crashes were angle collisions. The majority of the crashes within the

project limits are clustered around the intersections of both SR 316 and Fence Road and SR 316 and Hurricane Trail.

There were several fatalities on this corridor from 2013-2015. The number of fatalities and the fatality rates are 1/0.32 MVM, 3/0.97 MVM and 4/1.3 MVM for 2013, 2014 and 2015 respectively. Three of the fatal crashes occurred at SR 316 and Harbins Road, and the other fatal crashes occurred at SR 20, SR 120, Boggs Road, Sugarloaf Parkway and SR 8. The statewide fatality rate for 2013-2015 are 0.97, 1.42 and 1.64 MVM respectively.

Other major projects in the vicinity of this project include PI 0013893, which proposes improving SR 316 from Wimberly Way to Progress Center Avenue. PI 0013897 is an interchange reconstruction project at SR 316 at SR 8/US 29, located just east of PI 0013895. PI 0013896 is an interchange reconstruction and relocation project at SR 316 at SR 8/Fence Road.

This project is justified by existing and future traffic congestion and historic crash rates. This corridor has multiple, frequent access points with high travel speeds. The purpose of the project is to upgrade this section of SR 316 to a limited-access facility, to improve traffic conditions, and reduce the frequency and severity of crashes.

DEPARTMENT OF TRANSPORTATION
STATE OF GEORGIA

INTERDEPARTMENTAL CORRESPONDENCE

FILE: PI# 0013896
Gwinnett County

OFFICE: Planning

DATE: July 26, 2017

FROM: Cynthia L. VanDyke, State Transportation Planning Administrator

TO: Kim Nesbitt, State Program Delivery Administrator
Attn: Anthony Tate

SUBJECT: Project Justification Statement – SR 316 at CR 5661/Fence Road and New Location from Fence Road to SR 8

The Office of Planning is providing this Project Justification Statement as defined in the Plan Development Process Manual. This PJS has been updated and includes 2015 crash and traffic data. If any changes occur to the concept, please notify this office immediately. If you have any questions, please call Megan Weiss at 404-631-1779.

CLV:mw

attachment

Project Justification Statement
Gwinnett County, PI 0013896
SR 316 @ CR 5661/Fence Rd and New Location from Fence Rd to SR 8

SR 316 is an urban principal arterial that provides east-west access in Gwinnett County; connecting to I-85 in the western portion of the county. SR 316 is four lanes, two in each direction, with partial limited access throughout the corridor. There are multiple distribution centers located along this section of the corridor. The predominant land uses along the corridor are commercial properties and industrial development. SR 316 is identified on the Atlanta Regional Strategic Transportation System (RSTS) by the Atlanta MPO. SR 316 is also identified on the Atlanta Strategic Truck Route Master Plan (ASTRoMaP) and the Regional Thoroughfare Network (RTN), which are networks adopted by the Atlanta MPO, indicating the regional significance of this route.

The purpose of this project is to reduce frequency and severity of crashes as well as reduce congestion on the corridor. The Office of Planning conducted a review of the State Route 316 Corridor Study to determine locations in Gwinnett and Barrow Counties suitable for a new interchange, grade-separated crossing, or an access closure in order to create a freeway-style facility on SR 316. As a result of the review, the Department recently programmed a series of projects on SR 316 from SR 20 in Gwinnett to SR 10 in Athens to create a limited access freeway system.

At this location, Planning recommended closing access to SR 316 and Fence Road, closing the median at this location, providing a new roadway connection between Fence Road and SR 8, and maintain access to Goodwin Distribution Center via extended right-in/right-out ramps where the existing driveway is located.

According to GDOT's GeoCount's 2015 traffic data, the current AADT on this section of SR 316 is 47,150. The corresponding level of service (LOS), as calculated in HCS 2010, is LOS D. This corridor was also analyzed in the Atlanta region's travel demand model (Year 2040, no build) to project future conditions if no changes are made. The project 2040 (no build) traffic volume for this corridor is 70,999 with a corresponding projected LOS of F. The current AADT on this section of SR 8/Winder Highway is 10,700. The corresponding level of service (LOS), as calculated in HCS 2010 for a two lane section, is LOS D. This corridor was also analyzed in the Atlanta region's travel demand model (Year 2040, no build) to project future conditions if no changes are made. The projected 2040 (no build) traffic volume for this corridor is 18,684 with a corresponding projected LOS of F. Traffic counts are currently unavailable for Fence Road.

The statewide average crash rate for an urban principal arterial for years 2013, 2014 and 2015 is 336, 363, and 335 per MVM respectively. The crash rates for the corridor for the years 2013, 2014, and 2015 are 255, 286 and 322 MVM respectively. The most common type of collision on the corridor was a rear end collision which represented 23% of all accidents. Rear end collisions are often associated with traffic congestion. Six percent of the crashes were angle collisions.

There were several fatalities on this corridor from 2013-2015. The number of fatalities and the fatality rates are 1/0.32 MVM, 3/0.97 MVM and 4/1.3 MVM for 2013, 2014 and 2015 respectively. The statewide fatality rate for 2013-2015 are 0.97, 1.42 and 1.64 MVM respectively. Three of the fatal

crashes occurred at SR 316 and Harbins Road, and the other fatal crashes occurred at SR 20, SR 120, Boggs Road, Sugarloaf Parkway and SR 8.

Other major projects in the vicinity include 0013893, which proposes improving SR 316 from Wimberly way to Progress Center Avenue. PI 0013897 is an interchange reconstruction project at SR 316 at SR 8/US 29. PI 0013895 is a series of access modifications on SR 316 at Hurricane Trail, Fence Road and the Goodwin Distribution Center.

This project is justified by existing and future traffic congestion and historic crash rates. This corridor has multiple, frequent access points with high travel speeds. The purpose of the project is to upgrade this section of SR 316 to a limited-access facility, to improve traffic conditions, and reduce the frequency and severity of crashes.

DEPARTMENT OF TRANSPORTATION
STATE OF GEORGIA

INTERDEPARTMENTAL CORRESPONDENCE

FILE: PI# 0013897
Gwinnett County

OFFICE: Planning

DATE: July 26, 2017

FROM: Cynthia L. VanDyke, State Transportation Planning Administrator

TO: Kim Nesbitt, State Program Delivery Administrator
Attn: Anthony Tate

SUBJECT: **Project Justification Statement** – SR 316 at SR 8/US 29

The Office of Planning is providing this Project Justification Statement as defined in the Plan Development Process Manual. This PJS has been updated and includes 2015 crash and traffic data. If any changes occur to the concept, please notify this office immediately. If you have any questions, please call Megan Weiss at 404-631-1779.

CLV:mw

Enclosure

Project Justification Statement
Gwinnett County, PI 0013897
SR 316 @ SR 8/US 29

SR 316 is an urban principal arterial that provides east-west access in Gwinnett County; connecting to I-85 in the western portion of the county. SR 316 is four lanes, two in each direction, with partial limited access throughout the corridor. There are multiple distribution centers located along this section of the corridor. The predominant land uses along the corridor are commercial properties and industrial development. SR 316 is identified on the Atlanta Regional Strategic Transportation System (RSTS) by the Atlanta MPO. SR 316 is also identified on the Atlanta Strategic Truck Route Master Plan (ASTRoMaP) and the Regional Thoroughfare Network (RTN), which are networks adopted by the Atlanta MPO, indicating the regional significance of this route.

The purpose of this project is to reduce frequency and severity of crashes as well as reduce congestion on the corridor. The Office of Planning conducted a review of the State Route 316 Corridor Study to determine locations in Gwinnett and Barrow Counties suitable for a new interchange, grade-separated crossing, or an access closure in order to create a freeway-style facility on SR 316. As a result of the review, the Department recently programmed a series of projects on SR 316 from SR 20 in Gwinnett to SR 10 in Athens to create a limited access freeway system.

SR 316 and SR 8 is a four-way signalized at-grade intersection with turn lanes. The interchange will be modified to accommodate existing development along SR 8 and the railroad tracks to the west. The ramps are proposed to be located on the east side of SR 8.

According to GDOT's GeoCount's 2015 traffic data, the current AADT on this section of SR 316 is 47,150. The corresponding level of service (LOS), as calculated in HCS 2010, is LOS D. This corridor was also analyzed in the Atlanta region's travel demand model (Year 2040, no build) to project future conditions if no changes are made. The project 2040 (no build) traffic volume for this corridor is 70,999 with a corresponding projected LOS of F. Traffic counts are currently unavailable for Fence Road.

The statewide average crash rate for an urban principal arterial for years 2013, 2014 and 2015 is 336, 363, and 335 MVM respectively. The crash rates for the corridor for the years 2013, 2014, and 2015 are 255, 286, and 322 per MVM respectively. The most common type of collision on the corridor was a rear end collision which represented 23% of all accidents. Rear end collisions are often associated with traffic congestion. 6% of the crashes were angle collisions.

There were several fatalities on this corridor from 2013-2015. The number of fatalities and the fatality rates are 1/0.32 MVM, 3/0.97 MVM and 4/1.3 MVM for 2013, 2014 and 2015 respectively. The statewide fatality rate for 2013-2015 are 0.97, 1.42 and 1.64 MVM respectively. Three of the fatal crashes occurred at SR 316 and Harbins Road, and the other fatal crashes occurred at SR 20, SR 120, Boggs Road, Sugarloaf Parkway and SR 8.

Other major projects in the vicinity include 0013893, which proposes improving SR 316 from Wimberly way to Progress Center Avenue. PI 0013896 is an interchange reconstruction and relocation project at

SR 316 at SR 8/Fence Road. PI 0013895 is a series of access modifications on SR 316 at Hurricane Trail, Fence Road and the Goodwin Distribution Center.

This project is justified by existing and future traffic congestion and historic crash rates. This corridor has multiple, frequent access points with high travel speeds. The purpose of the project is to upgrade this section of SR 316 to a limited-access facility, to improve traffic conditions, and reduce the frequency and severity of crashes.

Attachment 2

Concept Layout

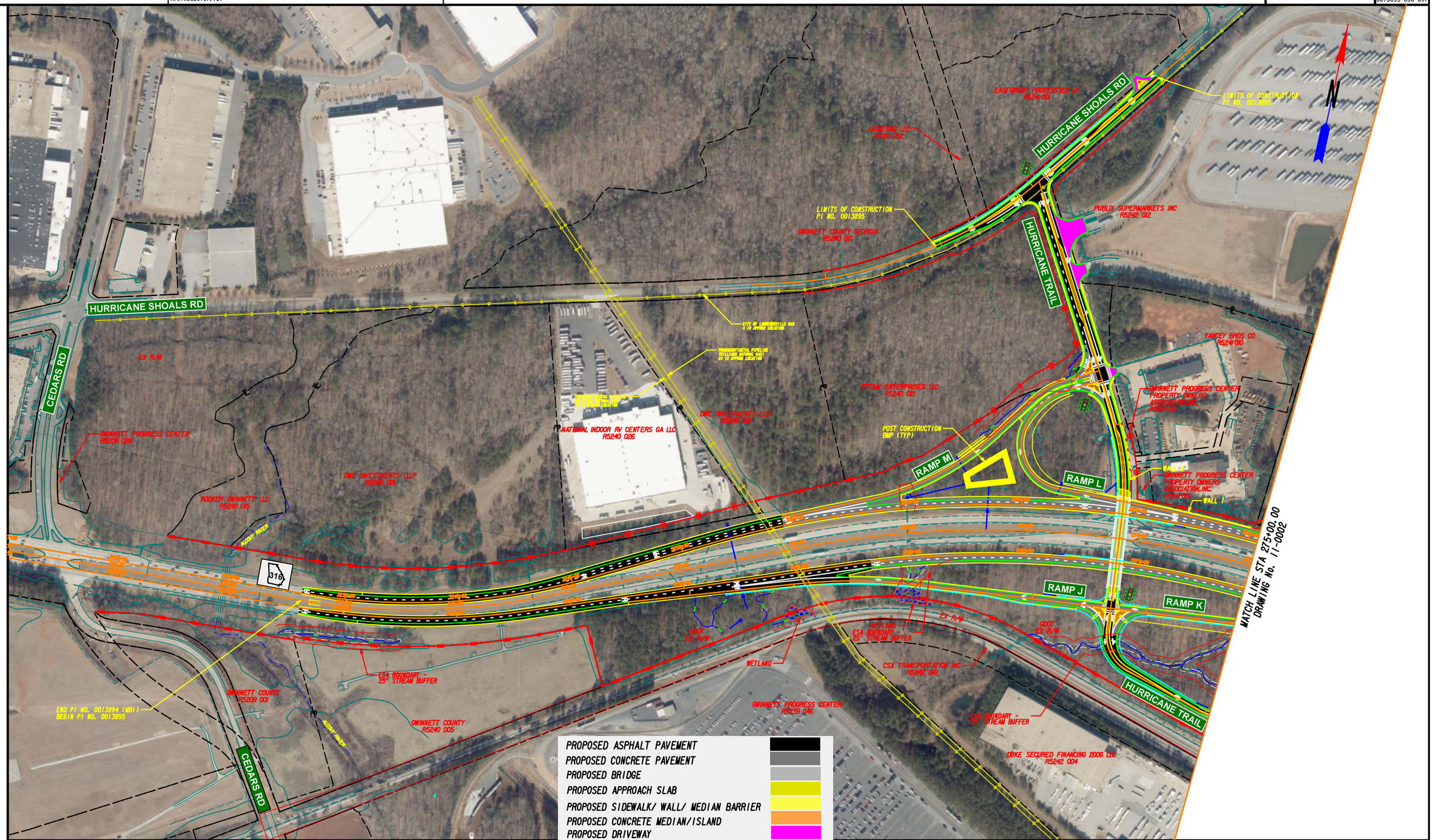

PROPERTY AND EXISTING R/W LINE
REQUIRED R/W LINE

PROPOSED SIGNAL

BEGIN LIMIT OF ACCESS.....BLA
END LIMIT OF ACCESS.....ELA
LIMIT OF ACCESS
REQ'D R/W & LIMIT OF ACCESS
ORANGE BARRIER FENCE
ESA - ENV. SENSITIVE AREA (SEE ERIT TABLE)

ATKINS
Member of the SNC-Lavalin Group
1600 RiverEdge Parkway, NW
Suite 700
Atlanta, GA 30328
Tel: (770)933-0280
Fax: (770)933-1920
Copyright © Atkins Limited (2018) www.atkinsglobal.com/northamerica

SCALE IN FEET
0 200 400 800

REVISION DATES

CONSTRUCTION LAYOUT

SR 316 FM CEDARS RD TO SUGARLOAF PWKY
PI 0013895

CHECKED:		DATE:	
BACKCHECKED:		DATE:	
CORRECTED:		DATE:	
VERIFIED:		DATE:	

DRAWING No. 11-0001

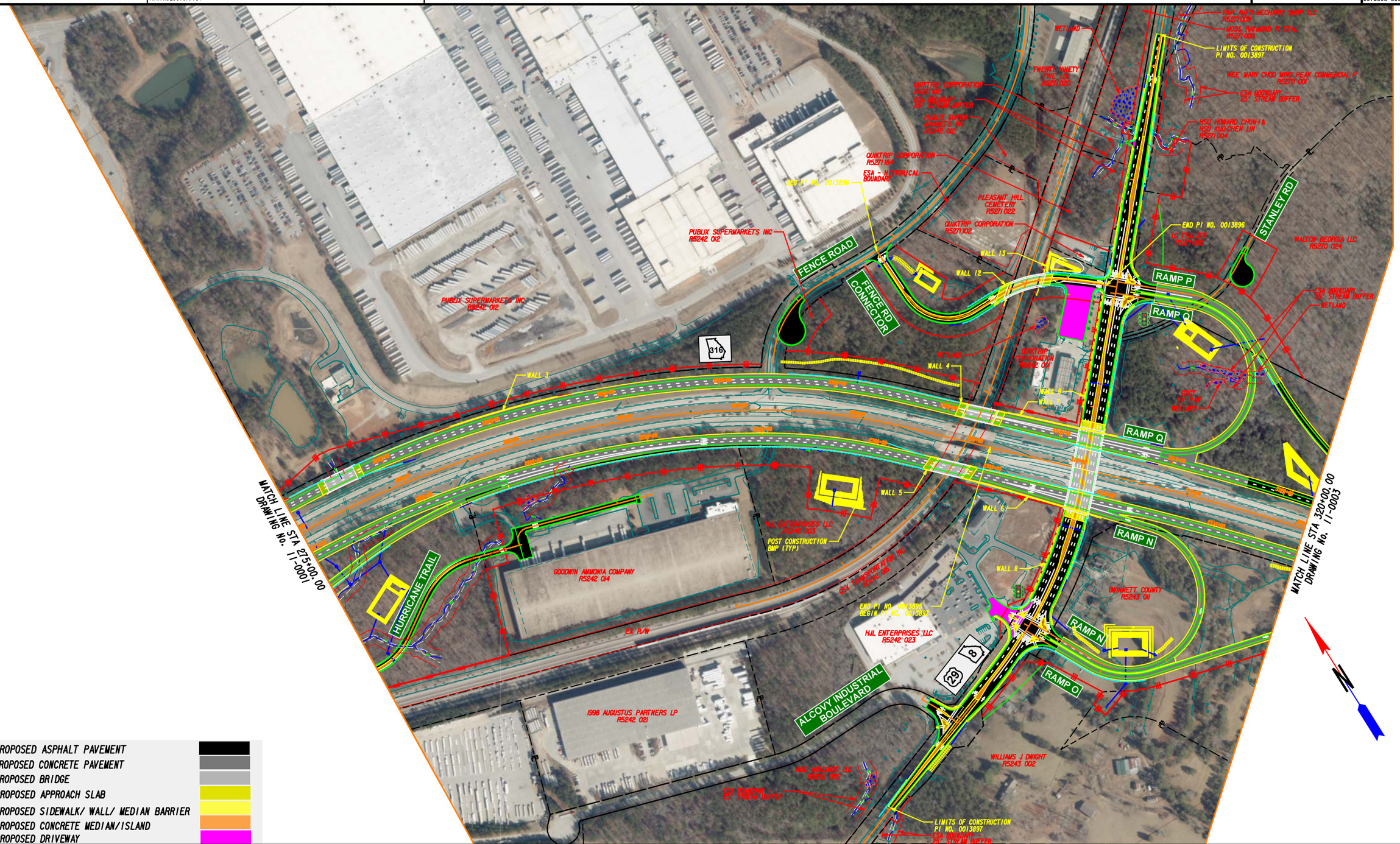

PROPOSED ASPHALT PAVEMENT	
PROPOSED CONCRETE PAVEMENT	
PROPOSED BRIDGE	
PROPOSED APPROACH SLAB	
PROPOSED SIDEWALK/ WALL/ MEDIAN BARRIER	
PROPOSED CONCRETE MEDIAN/ISLAND	
PROPOSED DRIVEWAY	

PROPERTY AND EXISTING R/W LINE
REQUIRED R/W LINE

PROPOSED SIGNAL

BEGIN LIMIT OF ACCESS.....BLA
END LIMIT OF ACCESS.....ELA
LIMIT OF ACCESS
REQ'D R/W & LIMIT OF ACCESS
ORANGE BARRIER FENCE
ESA - ENV. SENSITIVE AREA (SEE ERIT TABLE)

ATKINS
Member of the SNC-Lavalin Group
1600 RiverEdge Parkway, NW
Suite 700
Atlanta, GA 30328
Tel: (770)933-0280
Fax: (770)933-1920
Copyright © Atkins Limited (2018) www.atkinsglobal.com/northamerica

SCALE IN FEET
0 200 400 800

REVISION DATES

CONSTRUCTION LAYOUT

SR 316 FM CEDARS RD TO SUGARLOAF PWKY
PI 0013895 PI 0013896 PI 0013897

CHECKED:		DATE:	
BACKCHECKED:		DATE:	
CORRECTED:		DATE:	
VERIFIED:		DATE:	

DRAWING No. 11-0002

10/29/2019 5:33:52 PM
USER:TSEP5307

GPLOT-V81
Atkins_Color.tbl

H:\GWIN\SR 316 at US 29\DGN\CR_SH3.dgn

GDOT

P.I. No.
0013895-896-897

WATCH LINE STA 320+00.00
DRAWING No. 11-0002

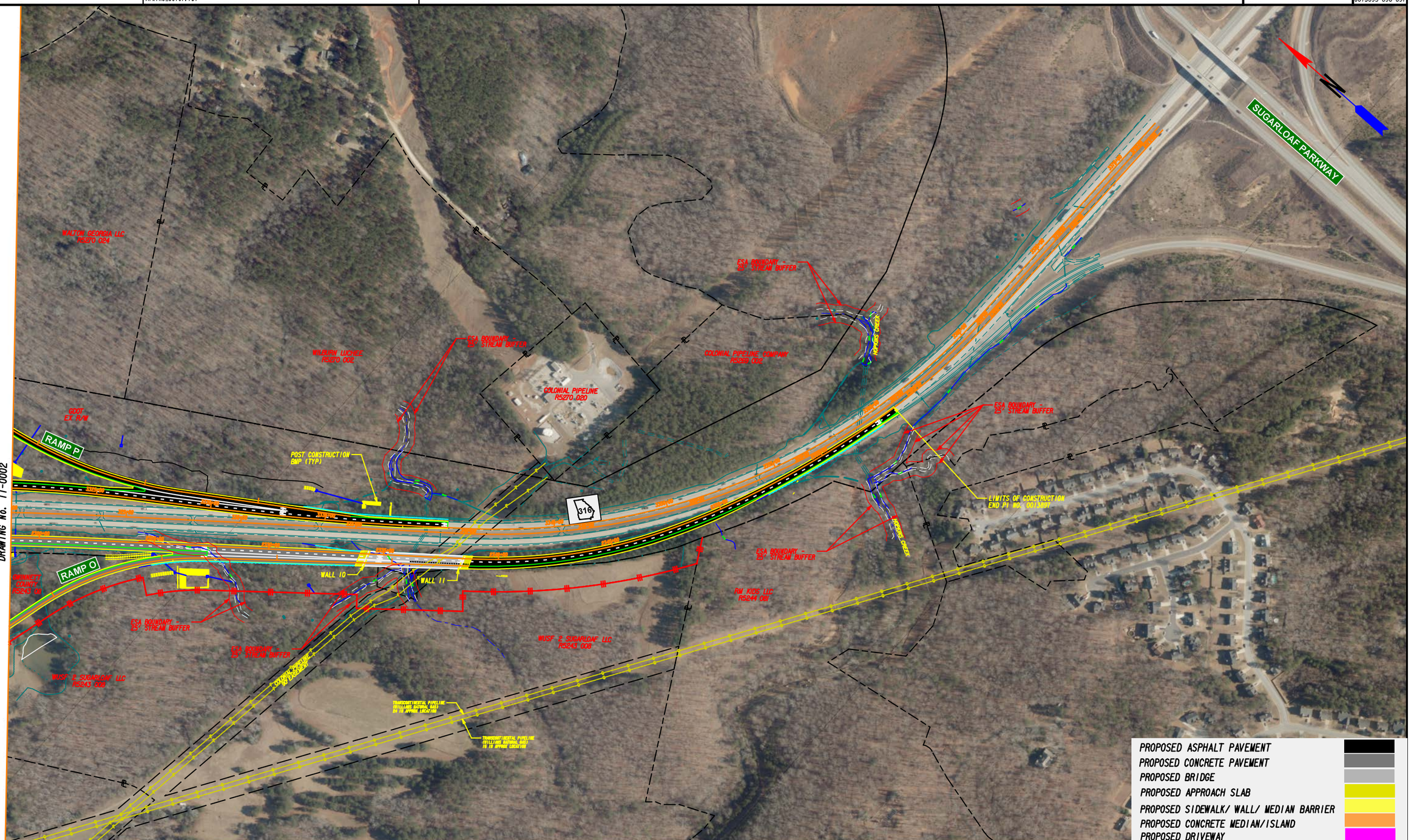

PROPERTY AND EXISTING R/W LINE
REQUIRED R/W LINE

PROPOSED SIGNAL

BEGIN LIMIT OF ACCESS.....BLA
END LIMIT OF ACCESS.....ELA
LIMIT OF ACCESS
REQ'D R/W & LIMIT OF ACCESS
ORANGE BARRIER FENCE
ESA - ENV. SENSITIVE AREA
(SEE ERIT TABLE)

ATKINS
Member of the SNC-Lavalin Group

1600 RiverEdge Parkway, NW
Suite 700
Atlanta, GA 30328

Tel: (770)933-0280
Fax: (770)933-1920

Copyright © Atkins Limited (2018) www.atkinsglobal.com/northamerica

SCALE IN FEET
0 200 400 800

REVISION DATES

CONSTRUCTION LAYOUT

SR 316 FM CEDARS RD TO SUGARLOAF PWKY
PI 0013897

CHECKED:		DATE:	
BACKCHECKED:		DATE:	
CORRECTED:		DATE:	
VERIFIED:		DATE:	

DRAWING No.
11-0003

10/23/2015 GPLN

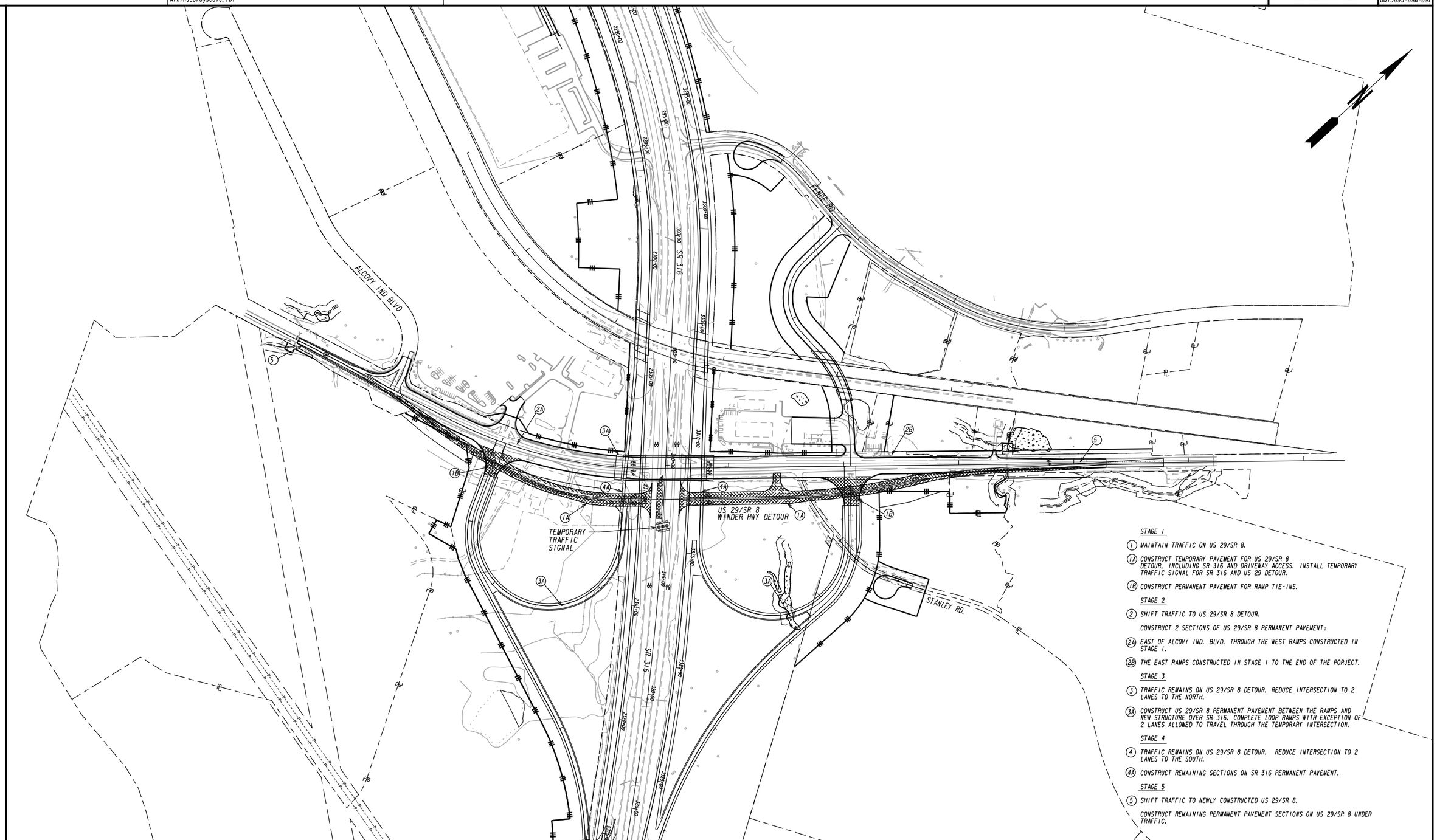

STAGE 1

(1) MAINTAIN TRAFFIC ON US 29/SR 8.

(1A) CONSTRUCT TEMPORARY PAVEMENT FOR US 29/SR 8 DETOUR, INCLUDING SR 316 AND DRIVEWAY ACCESS. INSTALL TEMPORARY TRAFFIC SIGNAL FOR SR 316 AND US 29 DETOUR.

(1B) CONSTRUCT PERMANENT PAVEMENT FOR RAMP TIE-INS.

STAGE 2

(2) SHIFT TRAFFIC TO US 29/SR 8 DETOUR.

CONSTRUCT 2 SECTIONS OF US 29/SR 8 PERMANENT PAVEMENT:

(2A) EAST OF ALCOVY IND. BLVD. THROUGH THE WEST RAMPS CONSTRUCTED IN STAGE 1.

(2B) THE EAST RAMPS CONSTRUCTED IN STAGE 1 TO THE END OF THE PORJECT.

STAGE 3

(3) TRAFFIC REMAINS ON US 29/SR 8 DETOUR. REDUCE INTERSECTION TO 2 LANES TO THE NORTH.

(3A) CONSTRUCT US 29/SR 8 PERMANENT PAVEMENT BETWEEN THE RAMPS AND NEW STRUCTURE OVER SR 316. COMPLETE LOOP RAMPS WITH EXCEPTION OF 2 LANES ALLOWED TO TRAVEL THROUGH THE TEMPORARY INTERSECTION.

STAGE 4

(4) TRAFFIC REMAINS ON US 29/SR 8 DETOUR. REDUCE INTERSECTION TO 2 LANES TO THE SOUTH.

(4A) CONSTRUCT REMAINING SECTIONS ON SR 316 PERMANENT PAVEMENT.

STAGE 5

(5) SHIFT TRAFFIC TO NEWLY CONSTRUCTED US 29/SR 8.

CONSTRUCT REMAINING PERMANENT PAVEMENT SECTIONS ON US 29/SR 8 UNDER TRAFFIC.

PROPERTY AND EXISTING R/W LINE
REQUIRED R/W LINE

BEGIN LIMIT OF ACCESS.....BLA
END LIMIT OF ACCESS.....ELA
LIMIT OF ACCESS
REQ'D R/W & LIMIT OF ACCESS
ORANGE BARRIER FENCE
ESA - ENV. SENSITIVE AREA
(SEE ERIT TABLE)

ATKINS
Member of the SNC-Lavalin Group
1600 RiverEdge Parkway, NW
Suite 700
Atlanta, GA 30328
Tel: (770)933-0280
Fax: (770)933-1920
Copyright © Atkins Limited (2018) www.atkinsglobal.com/northamerica

SCALE IN FEET
0 200 400 800

REVISION DATES

CONSTRUCTION LAYOUT

ON SITE DETOUR LAYOUT
US 29/SR 8 WINDER HWY

CHECKED:		DATE:	
BACKCHECKED:		DATE:	
CORRECTED:		DATE:	
VERIFIED:		DATE:	

DRAWING No.
11-0004

Attachment 3

Typical Sections

(*A) : PAVEMENT EDGE TREATMENT
SEE GA DETAIL P-7 FOR DETAILS

PAVEMENT MATERIAL SCHEDULE
(A) RECYCLED ASPH. CONC. 12.5 mm OGFC, GP 2 ONLY, INCL. POLYMER-MODIFIED BITUM MATL & H LIME, 90 LBS/SY
(B1) RECYCLED ASPH. CONC. 12.5 mm SMA, GP 2 ONLY, INCL. POLYMER-MODIFIED BITUM MATL & H LIME, 165 LBS/SY
(B2) RECYCLED ASPH. CONC. 12.5 mm SUPERPAVE, GP 2 ONLY, INCL. POLYMER-MODIFIED BITUM MATL & H LIME, 165 LBS/SY
(B3) RECYCLED ASPH. CONC. 12.5 mm SUPERPAVE, GP 2 ONLY, INCL. BITUM MATL & H LIME, 165 LBS/SY
(C1) RECYCLED ASPH. CONC. 19 mm SUPERPAVE, GP 1 OR GP 2, INCL. BITUM MATL & H LIME, 220 LBS/SY
(C2) RECYCLED ASPH. CONC. 19 mm SUPERPAVE, GP 1 OR GP 2, INCL. BITUM MATL & H LIME, 330 LBS/SY
(D1) RECYCLED ASPH. CONC. 25 mm SUPERPAVE, GP 1 OR GP 2, INCL. BITUM MATL & H LIME, 440 LBS/SY
(D2) RECYCLED ASPH. CONC. 25 mm SUPERPAVE, GP 1 OR GP 2, INCL. BITUM MATL & H LIME, 770 LBS/SY
(D3) RECYCLED ASPH. CONC. 25 mm SUPERPAVE, GP 1 OR GP 2, INCL. BITUM MATL & H LIME, 1100 LBS/SY
(E) GRADED AGGREGATE BASE COURSE, 12"
(F) GRADED AGGREGATE BASE COURSE, 10"
(G) PLAIN PC CONC PVMT, CL CONC, 12 INCH THK
(H) PLAIN PC CONC PVMT, CL CONC, 10 INCH THK
(I) CONCRETE CURB & GUTTER, 8" X 30", TYPE 2, GA STD. 9032 B
(J) CONCRETE SIDEWALK, 4" THICK
(K) CONCRETE MEDIAN BARRIER TP. S-2
(L) CONCRETE MEDIAN, INTEGRAL, 7½" THICK, TYPE 7, GA STD. 9032 B
(M) CONCRETE CURB & GUTTER, 8" X 30", TYPE 7, GA STD. 9032 B
(N) RECYCLED ASPH. CONC. LEVELING, INCL. BITUM MATL & H LIME
(O) MILL ASPH CONC PVMT, VARIABLE DEPTH
(P) INDENTATION RUMBLE STRIPS - GROUND IN PLACE

(*) CONTINUOUS - GA DETAIL T-23C, T-25

NOTE:
1. FULL DEPTH ASPHALT WILL BE PUT BACK IN KIND AND REMOVED ONCE THE ULTIMATE SR 316 BUILD OUT IS COMPLETE.
2. IF ANY CONCRETE SECTIONS HAVE ASPHALT SHOULDERS, THE FULL DEPTH ASPAHLT SHOULDER SECTIONS SHALL MATCH WHAT IS SHOWN IN THE TYPICAL SECTIONS AND PAVEMENT DESIGN.

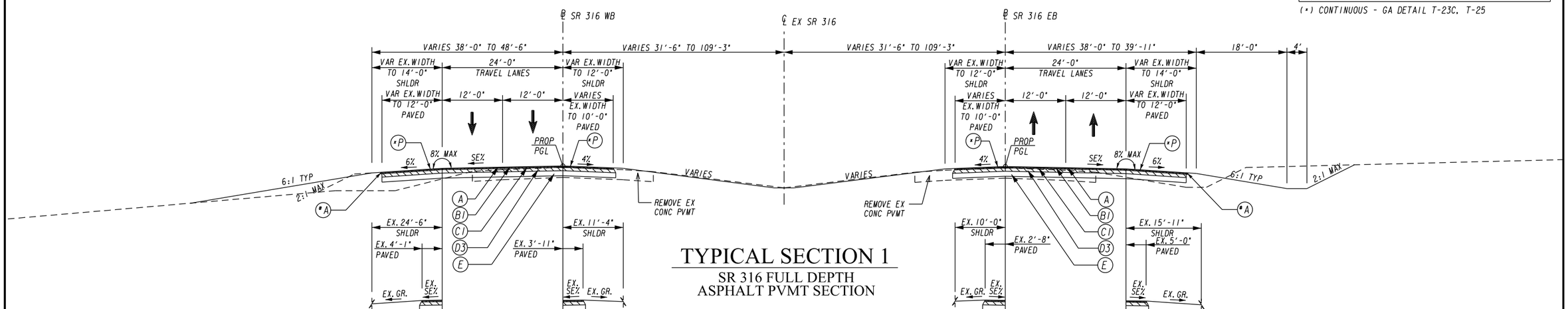

TYPICAL SECTION 1

SR 316 FULL DEPTH
ASPHALT PVMT SECTION

ATKINS
Member of the SNC-Lavalin Group
1600 RiverEdge Parkway, NW
Suite 700
Atlanta, GA 30328
Tel: (770)933-0280
Fax: (770)933-1920
Copyright © Atkins Limited (2018) www.atkinsglobal.com/northamerica

(SCALE IN FEET)
H. 0 10 20 30
V. 0 10 20 30

REVISION DATES

TYPICAL SECTIONS

SR 316 FM CEDARS RD TO SUGARLOAF PKWY

CHECKED:		DATE:	
BACKCHECKED:		DATE:	
CORRECTED:		DATE:	
VERIFIED:		DATE:	

DRAWING No. 05-0001

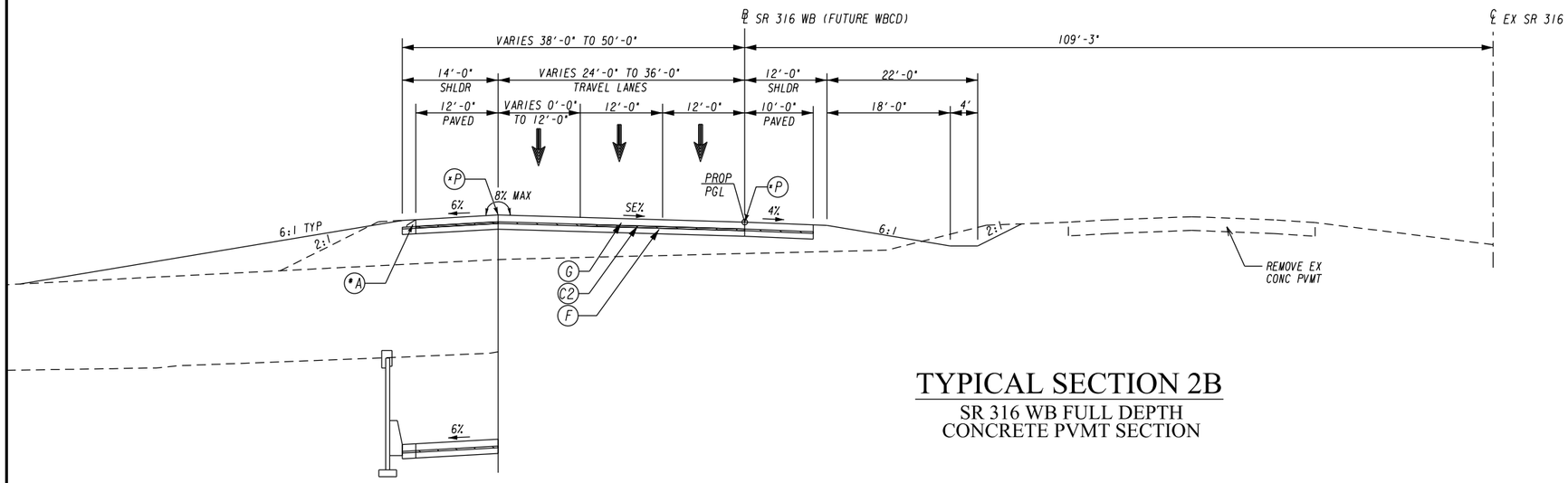

MSE WALL/SIDE BARRIER
SEE PLANS FOR LOCATION

TYPICAL SECTION 2B

SR 316 WB FULL DEPTH
CONCRETE PVMT SECTION

(*A) : PAVEMENT EDGE TREATMENT
SEE GA DETAIL P-7 FOR DETAILS

PAVEMENT MATERIAL SCHEDULE
(A) RECYCLED ASPH. CONC. 12.5 mm OGFC, GP 2 ONLY. INCL. POLYMER-MODIFIED BITUM MATL & H LIME, 90 LBS/SY
(B1) RECYCLED ASPH. CONC. 12.5 mm SMA, GP 2 ONLY. INCL. POLYMER-MODIFIED BITUM MATL & H LIME, 165 LBS/SY
(B2) RECYCLED ASPH. CONC. 12.5 mm SUPERPAVE, GP 2 ONLY. INCL. POLYMER-MODIFIED BITUM MATL & H LIME, 165 LBS/SY
(B3) RECYCLED ASPH. CONC. 12.5 mm SUPERPAVE, GP 2 ONLY. INCL. BITUM MATL & H LIME, 165 LBS/SY
(C1) RECYCLED ASPH. CONC. 19 mm SUPERPAVE, GP 1 OR GP 2. INCL. BITUM MATL & H LIME, 220 LBS/SY
(C2) RECYCLED ASPH. CONC. 19 mm SUPERPAVE, GP 1 OR GP 2. INCL. BITUM MATL & H LIME, 330 LBS/SY
(D1) RECYCLED ASPH. CONC. 25 mm SUPERPAVE, GP 1 OR GP 2. INCL. BITUM MATL & H LIME, 440 LBS/SY
(D2) RECYCLED ASPH. CONC. 25 mm SUPERPAVE, GP 1 OR GP 2. INCL. BITUM MATL & H LIME, 770 LBS/SY
(D3) RECYCLED ASPH. CONC. 25 mm SUPERPAVE, GP 1 OR GP 2. INCL. BITUM MATL & H LIME, 1100 LBS/SY
(E) GRADED AGGREGATE BASE COURSE, 12"
(F) GRADED AGGREGATE BASE COURSE, 10"
(G) PLAIN PC CONC PVMT, CL CONC, 12 INCH THK
(H) PLAIN PC CONC PVMT, CL CONC, 10 INCH THK
(I) CONCRETE CURB & GUTTER, 8" X 30", TYPE 2, GA STD. 9032 B
(J) CONCRETE SIDEWALK, 4" THICK
(K) CONCRETE MEDIAN BARRIER TP. S-2
(L) CONCRETE MEDIAN, INTEGRAL, 7½" THICK, TYPE 7, GA STD. 9032 B
(M) CONCRETE CURB & GUTTER, 8" X 30", TYPE 7, GA STD. 9032 B
(N) RECYCLED ASPH. CONC. LEVELING, INCL. BITUM MATL & H LIME
(O) MILL ASPH CONC PVMT, VARIABLE DEPTH
(P) INDENTATION RUMBLE STRIPS - GROUND IN PLACE

(*) CONTINUOUS - GA DETAIL T-23C, T-25

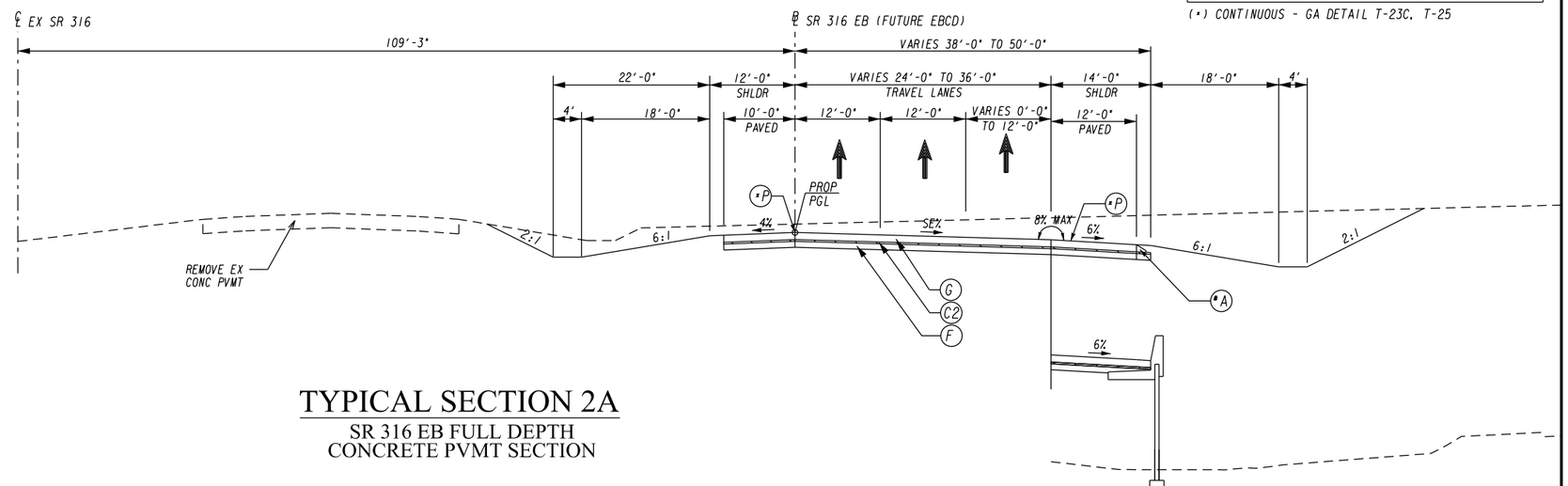

TYPICAL SECTION 2A

SR 316 EB FULL DEPTH
CONCRETE PVMT SECTION

MSE WALL SECTION
SEE PLANS FOR LOCATION

ATKINS
Member of the SNC-Lavalin Group
1600 RiverEdge Parkway, NW
Suite 700
Atlanta, GA 30328
Tel: (770)933-0280
Fax: (770)933-1920
Copyright © Atkins Limited (2018) www.atkinsglobal.com/northamerica

(SCALE IN FEET)
H. 0 10 20 30
V. 0 10 20 30

REVISION DATES

TYPICAL SECTIONS

SR 316 FM CEDARS RD TO SUGARLOAF PKWY

CHECKED:		DATE:		DRAWING No.
BACKCHECKED:		DATE:		05-0002
CORRECTED:		DATE:		
VERIFIED:		DATE:		

(*A) : PAVEMENT EDGE TREATMENT
SEE GA DETAIL P-7 FOR DETAILS

PAVEMENT MATERIAL SCHEDULE
(A) RECYCLED ASPH. CONC. 12.5 mm OGFC, GP 2 ONLY, INCL. POLYMER-MODIFIED BITUM MATL & H LIME, 90 LBS/SY
(B1) RECYCLED ASPH. CONC. 12.5 mm SMA, GP 2 ONLY, INCL. POLYMER-MODIFIED BITUM MATL & H LIME, 165 LBS/SY
(B2) RECYCLED ASPH. CONC. 12.5 mm SUPERPAVE, GP 2 ONLY, INCL. POLYMER-MODIFIED BITUM MATL & H LIME, 165 LBS/SY
(B3) RECYCLED ASPH. CONC. 12.5 mm SUPERPAVE, GP 2 ONLY, INCL. BITUM MATL & H LIME, 165 LBS/SY
(C1) RECYCLED ASPH. CONC. 19 mm SUPERPAVE, GP 1 OR GP 2, INCL. BITUM MATL & H LIME, 220 LBS/SY
(C2) RECYCLED ASPH. CONC. 19 mm SUPERPAVE, GP 1 OR GP 2, INCL. BITUM MATL & H LIME, 330 LBS/SY
(D1) RECYCLED ASPH. CONC. 25 mm SUPERPAVE, GP 1 OR GP 2, INCL. BITUM MATL & H LIME, 440 LBS/SY
(D2) RECYCLED ASPH. CONC. 25 mm SUPERPAVE, GP 1 OR GP 2, INCL. BITUM MATL & H LIME, 770 LBS/SY
(D3) RECYCLED ASPH. CONC. 25 mm SUPERPAVE, GP 1 OR GP 2, INCL. BITUM MATL & H LIME, 1100 LBS/SY
(E) GRADED AGGREGATE BASE COURSE, 12"
(F) GRADED AGGREGATE BASE COURSE, 10"
(G) PLAIN PC CONC PVMT, CL CONC, 12 INCH THK
(H) PLAIN PC CONC PVMT, CL CONC, 10 INCH THK
(I) CONCRETE CURB & GUTTER, 8" X 30", TYPE 2, GA STD. 9032 B
(J) CONCRETE SIDEWALK, 4" THICK
(K) CONCRETE MEDIAN BARRIER TP. S-2
(L) CONCRETE MEDIAN, INTEGRAL, 7½" THICK, TYPE 7, GA STD.9032 B
(M) CONCRETE CURB & GUTTER, 8" X 30", TYPE 7, GA STD. 9032 B
(N) RECYCLED ASPH. CONC. LEVELING, INCL. BITUM MATL & H LIME
(O) MILL ASPH CONC PVMT, VARIABLE DEPTH
(P) INDENTATION RUMBLE STRIPS - GROUND IN PLACE

(*) CONTINUOUS - GA DETAIL T-23C, T-25

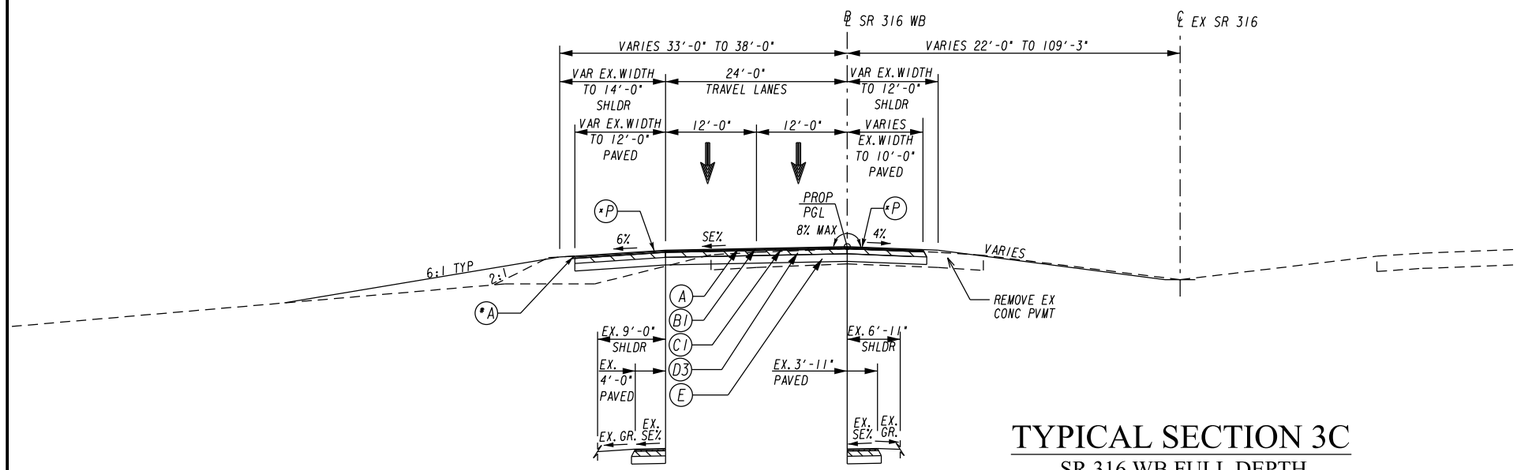

TYPICAL SECTION 3C

SR 316 WB FULL DEPTH
ASPHALT PVMT SECTION

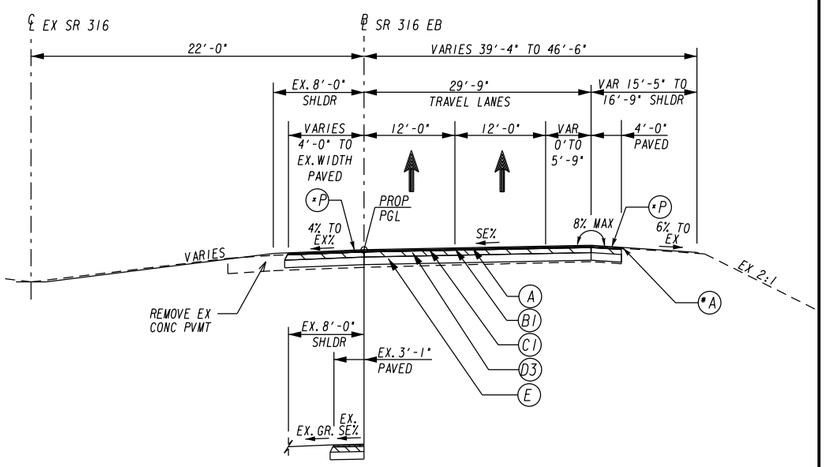

TYPICAL SECTION 3B

SR 316 EB FULL DEPTH
ASPHALT PVMT SECTION

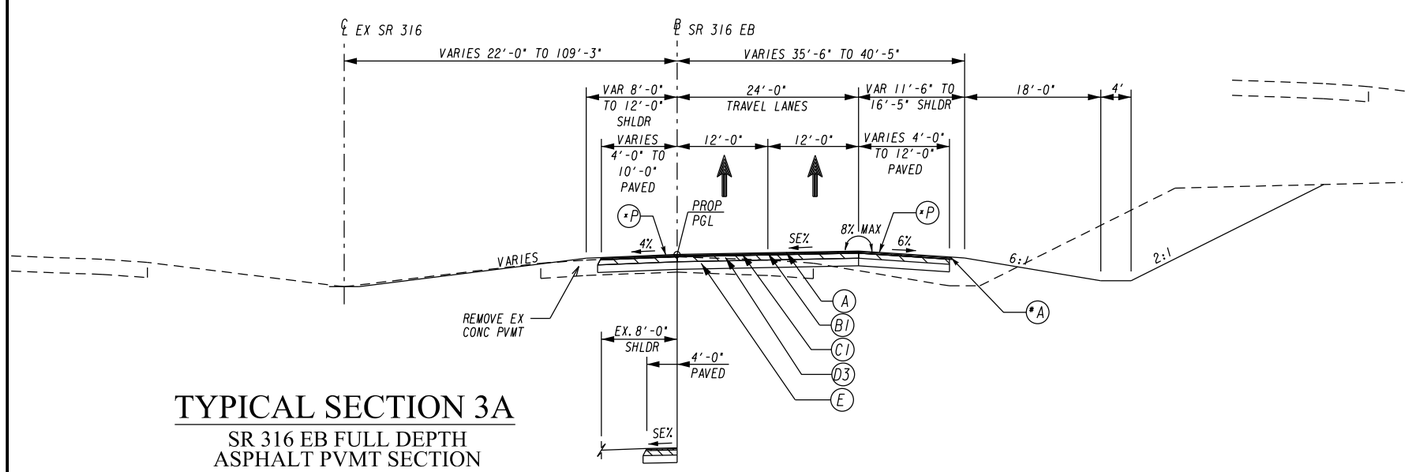

TYPICAL SECTION 3A

SR 316 EB FULL DEPTH
ASPHALT PVMT SECTION

ATKINS
Member of the SNC-Lavalin Group
1600 RiverEdge Parkway, NW
Suite 700
Atlanta, GA 30328
Tel: (770)933-0280
Fax: (770)933-1920
Copyright © Atkins Limited (2018) www.atkinsglobal.com/northamerica

(SCALE IN FEET)
H. 0 10 20 30
V. 0 10 20 30

REVISION DATES

TYPICAL SECTIONS

SR 316 FM CEDARS RD TO SUGARLOAF PKWY

CHECKED:		DATE:	
BACKCHECKED:		DATE:	
CORRECTED:		DATE:	
VERIFIED:		DATE:	

DRAWING No. 05-0003

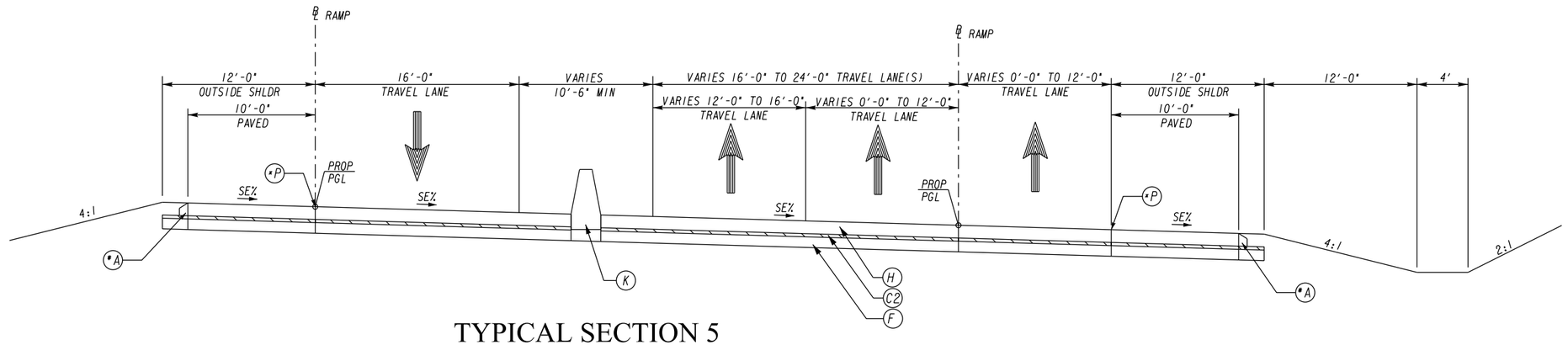

TYPICAL SECTION 5

CONCRETE PVMT SECTION
RAMP L / RAMP M / RAMP N
RAMP O / RAMP P / RAMP Q

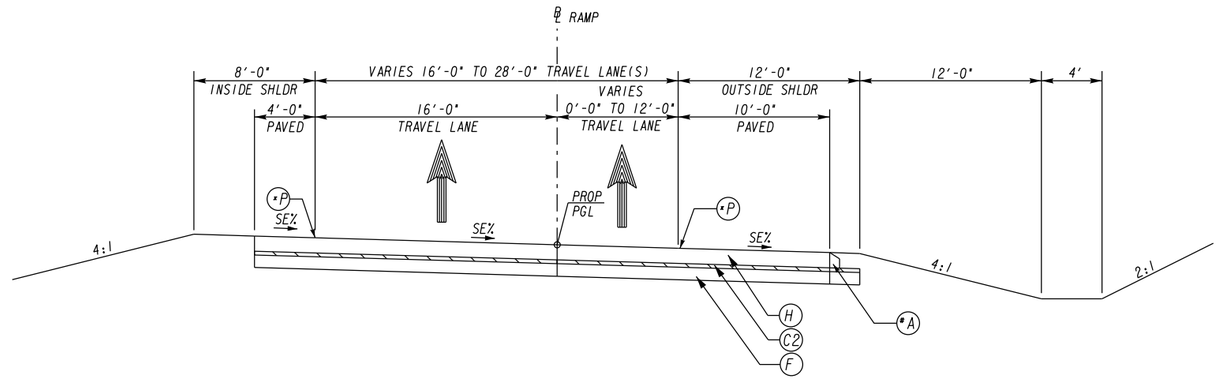

TYPICAL SECTION 4

CONCRETE PVMT SECTION
RAMP J / RAMP K / RAMP L / RAMP M
RAMP N / RAMP O / RAMP P / RAMP Q

(*A) : PAVEMENT EDGE TREATMENT
SEE GA DETAIL P-7 FOR DETAILS

PAVEMENT MATERIAL SCHEDULE	
A	RECYCLED ASPH. CONC. 12.5 mm OGFC, GP 2 ONLY, INCL. POLYMER-MODIFIED BITUM MATL & H LIME, 90 LBS/SY
B1	RECYCLED ASPH. CONC. 12.5 mm SMA, GP 2 ONLY, INCL. POLYMER-MODIFIED BITUM MATL & H LIME, 165 LBS/SY
B2	RECYCLED ASPH. CONC. 12.5 mm SUPERPAVE, GP 2 ONLY, INCL. POLYMER-MODIFIED BITUM MATL & H LIME, 165 LBS/SY
B3	RECYCLED ASPH. CONC. 12.5 mm SUPERPAVE, GP 2 ONLY, INCL. BITUM MATL & H LIME, 165 LBS/SY
C1	RECYCLED ASPH. CONC. 19 mm SUPERPAVE, GP 1 OR GP 2, INCL. BITUM MATL & H LIME, 220 LBS/SY
C2	RECYCLED ASPH. CONC. 19 mm SUPERPAVE, GP 1 OR GP 2, INCL. BITUM MATL & H LIME, 330 LBS/SY
D1	RECYCLED ASPH. CONC. 25 mm SUPERPAVE, GP 1 OR GP 2, INCL. BITUM MATL & H LIME, 440 LBS/SY
D2	RECYCLED ASPH. CONC. 25 mm SUPERPAVE, GP 1 OR GP 2, INCL. BITUM MATL & H LIME, 770 LBS/SY
D3	RECYCLED ASPH. CONC. 25 mm SUPERPAVE, GP 1 OR GP 2, INCL. BITUM MATL & H LIME, 1100 LBS/SY
E	GRADED AGGREGATE BASE COURSE, 12"
F	GRADED AGGREGATE BASE COURSE, 10"
G	PLAIN PC CONC PVMT, CL CONC, 12 INCH THK
H	PLAIN PC CONC PVMT, CL CONC, 10 INCH THK
I	CONCRETE CURB & GUTTER, 8" X 30", TYPE 2, GA STD. 9032 B
J	CONCRETE SIDEWALK, 4" THICK
K	CONCRETE MEDIAN BARRIER TP. S-2
L	CONCRETE MEDIAN, INTEGRAL, 7½" THICK, TYPE 7, GA STD.9032 B
M	CONCRETE CURB & GUTTER, 8" X 30", TYPE 7, GA STD. 9032 B
N	RECYCLED ASPH. CONC. LEVELING, INCL. BITUM MATL & H LIME
O	MILL ASPH CONC PVMT, VARIABLE DEPTH
P	INDENTATION RUMBLE STRIPS - GROUND IN PLACE

(*) CONTINUOUS - GA DETAIL T-23C, T-25

ATKINS
Member of the SNC-Lavalin Group
1600 RiverEdge Parkway, NW
Suite 700
Atlanta, GA 30328
Tel: (770)933-0280
Fax: (770)933-1920
Copyright © Atkins Limited (2018) www.atkinsglobal.com/northamerica

(SCALE IN FEET)
H. 0 10 20 30
V. 0 10 20 30

REVISION DATES

TYPICAL SECTIONS

SR 316 FM CEDARS RD TO SUGARLOAF PKWY

CHECKED:		DATE:	
BACKCHECKED:		DATE:	
CORRECTED:		DATE:	
VERIFIED:		DATE:	

DRAWING No. 05-0004

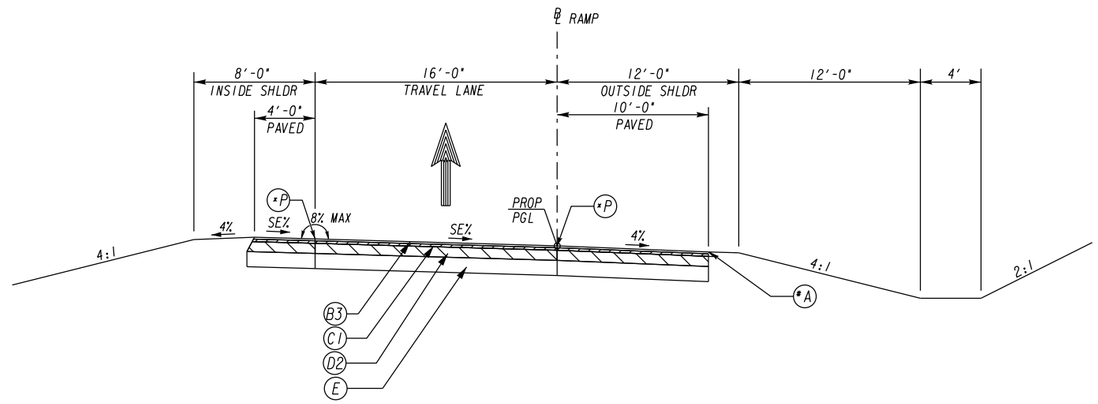

TYPICAL SECTION 6

ASPHALT PVMT SECTION
RAMP J / RAMP P

(*A) : PAVEMENT EDGE TREATMENT
SEE GA DETAIL P-7 FOR DETAILS

PAVEMENT MATERIAL SCHEDULE	
A	RECYCLED ASPH. CONC. 12.5 mm OGFC, GP 2 ONLY, INCL. POLYMER-MODIFIED BITUM MATL & H LIME, 90 LBS/SY
B1	RECYCLED ASPH. CONC. 12.5 mm SMA, GP 2 ONLY, INCL. POLYMER-MODIFIED BITUM MATL & H LIME, 165 LBS/SY
B2	RECYCLED ASPH. CONC. 12.5 mm SUPERPAVE, GP 2 ONLY, INCL. POLYMER-MODIFIED BITUM MATL & H LIME, 165 LBS/SY
B3	RECYCLED ASPH. CONC. 12.5 mm SUPERPAVE, GP 2 ONLY, INCL. BITUM MATL & H LIME, 165 LBS/SY
C1	RECYCLED ASPH. CONC. 19 mm SUPERPAVE, GP 1 OR GP 2, INCL. BITUM MATL & H LIME, 220 LBS/SY
C2	RECYCLED ASPH. CONC. 19 mm SUPERPAVE, GP 1 OR GP 2, INCL. BITUM MATL & H LIME, 330 LBS/SY
D1	RECYCLED ASPH. CONC. 25 mm SUPERPAVE, GP 1 OR GP 2, INCL. BITUM MATL & H LIME, 440 LBS/SY
D2	RECYCLED ASPH. CONC. 25 mm SUPERPAVE, GP 1 OR GP 2, INCL. BITUM MATL & H LIME, 770 LBS/SY
D3	RECYCLED ASPH. CONC. 25 mm SUPERPAVE, GP 1 OR GP 2, INCL. BITUM MATL & H LIME, 1100 LBS/SY
E	GRADED AGGREGATE BASE COURSE, 12"
F	GRADED AGGREGATE BASE COURSE, 10"
G	PLAIN PC CONC PVMT, CL CONC, 12 INCH THK
H	PLAIN PC CONC PVMT, CL CONC, 10 INCH THK
I	CONCRETE CURB & GUTTER, 8" X 30", TYPE 2, GA STD. 9032 B
J	CONCRETE SIDEWALK, 4" THICK
K	CONCRETE MEDIAN BARRIER TP. S-2
L	CONCRETE MEDIAN, INTEGRAL, 7½" THICK, TYPE 7, GA STD.9032 B
M	CONCRETE CURB & GUTTER, 8" X 30", TYPE 7, GA STD. 9032 B
N	RECYCLED ASPH. CONC. LEVELING, INCL. BITUM MATL & H LIME
O	MILL ASPH CONC PVMT, VARIABLE DEPTH
P	INDENTATION RUMBLE STRIPS - GROUND IN PLACE

(*) CONTINUOUS - GA DETAIL T-23C, T-25

ATKINS
Member of the SNC-Lavalin Group
1600 RiverEdge Parkway, NW
Suite 700
Atlanta, GA 30328
Tel: (770)933-0280
Fax: (770)933-1920
Copyright © Atkins Limited (2018) www.atkinsglobal.com/northamerica

(SCALE IN FEET)
H. 0 10 20 30
V. 0 10 20 30

REVISION DATES

TYPICAL SECTIONS
SR 316 FM CEDARS RD TO SUGARLOAF PKWY

CHECKED:		DATE:	
BACKCHECKED:		DATE:	
CORRECTED:		DATE:	
VERIFIED:		DATE:	

DRAWING No.
05-0005

(*A) : PAVEMENT EDGE TREATMENT
SEE GA DETAIL P-7 FOR DETAILS

PAVEMENT MATERIAL SCHEDULE	
A	RECYCLED ASPH. CONC. 12.5 mm OGFC, GP 2 ONLY, INCL. POLYMER-MODIFIED BITUM MATL & H LIME, 90 LBS/SY
B1	RECYCLED ASPH. CONC. 12.5 mm SMA, GP 2 ONLY, INCL. POLYMER-MODIFIED BITUM MATL & H LIME, 165 LBS/SY
B2	RECYCLED ASPH. CONC. 12.5 mm SUPERPAVE, GP 2 ONLY, INCL. POLYMER-MODIFIED BITUM MATL & H LIME, 165 LBS/SY
B3	RECYCLED ASPH. CONC. 12.5 mm SUPERPAVE, GP 2 ONLY, INCL. BITUM MATL & H LIME, 165 LBS/SY
C1	RECYCLED ASPH. CONC. 19 mm SUPERPAVE, GP 1 OR GP 2, INCL. BITUM MATL & H LIME, 220 LBS/SY
C2	RECYCLED ASPH. CONC. 19 mm SUPERPAVE, GP 1 OR GP 2, INCL. BITUM MATL & H LIME, 330 LBS/SY
D1	RECYCLED ASPH. CONC. 25 mm SUPERPAVE, GP 1 OR GP 2, INCL. BITUM MATL & H LIME, 440 LBS/SY
D2	RECYCLED ASPH. CONC. 25 mm SUPERPAVE, GP 1 OR GP 2, INCL. BITUM MATL & H LIME, 770 LBS/SY
D3	RECYCLED ASPH. CONC. 25 mm SUPERPAVE, GP 1 OR GP 2, INCL. BITUM MATL & H LIME, 1100 LBS/SY
E	GRADED AGGREGATE BASE COURSE, 12"
F	GRADED AGGREGATE BASE COURSE, 10"
G	PLAIN PC CONC PVMT, CL CONC, 12 INCH THK
H	PLAIN PC CONC PVMT, CL CONC, 10 INCH THK
I	CONCRETE CURB & GUTTER, 8" X 30", TYPE 2, GA STD. 9032 B
J	CONCRETE SIDEWALK, 4" THICK
K	CONCRETE MEDIAN BARRIER TP. S-2
L	CONCRETE MEDIAN, INTEGRAL, 7¼" THICK, TYPE 7, GA STD.9032 B
M	CONCRETE CURB & GUTTER, 8" X 30", TYPE 7, GA STD. 9032 B
N	RECYCLED ASPH. CONC. LEVELING, INCL. BITUM MATL & H LIME
O	MILL ASPH CONC PVMT, VARIABLE DEPTH
P	INDENTATION RUMBLE STRIPS - GROUND IN PLACE

(*) CONTINUOUS - GA DETAIL T-23C, T-25

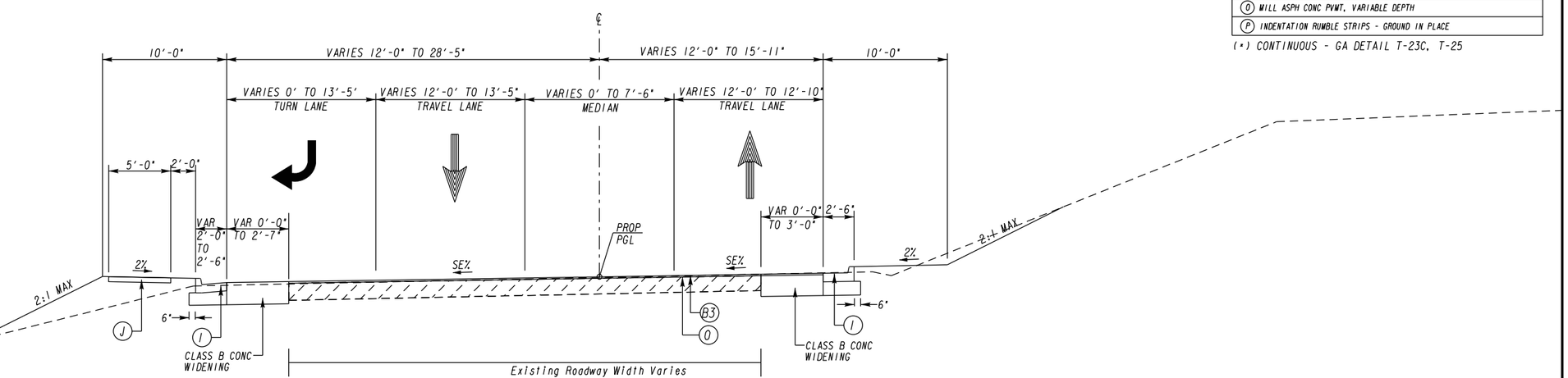

TYPICAL SECTION 7
HURRICANE SHOALS ROAD

ATKINS
Member of the SNC-Lavalin Group
1600 RiverEdge Parkway, NW
Suite 700
Atlanta, GA 30328
Tel: (770)933-0280
Fax: (770)933-1920
Copyright © Atkins Limited (2018) www.atkinsglobal.com/northamerica

(SCALE IN FEET)
H. 0 10 20 30
V. 0 10 20 30

REVISION DATES

TYPICAL SECTIONS
SR 316 FM CEDARS RD TO SUGARLOAF PKWY

CHECKED:		DATE:	
BACKCHECKED:		DATE:	
CORRECTED:		DATE:	
VERIFIED:		DATE:	

DRAWING No. 05-0006

(*A) : PAVEMENT EDGE TREATMENT
SEE GA DETAIL P-7 FOR DETAILS

PAVEMENT MATERIAL SCHEDULE	
A	RECYCLED ASPH. CONC. 12.5 mm OGFC, GP 2 ONLY, INCL. POLYMER-MODIFIED BITUM MATL & H LIME, 90 LBS/SY
B1	RECYCLED ASPH. CONC. 12.5 mm SMA, GP 2 ONLY, INCL. POLYMER-MODIFIED BITUM MATL & H LIME, 165 LBS/SY
B2	RECYCLED ASPH. CONC. 12.5 mm SUPERPAVE, GP 2 ONLY, INCL. POLYMER-MODIFIED BITUM MATL & H LIME, 165 LBS/SY
B3	RECYCLED ASPH. CONC. 12.5 mm SUPERPAVE, GP 2 ONLY, INCL. BITUM MATL & H LIME, 165 LBS/SY
C1	RECYCLED ASPH. CONC. 19 mm SUPERPAVE, GP 1 OR GP 2, INCL. BITUM MATL & H LIME, 220 LBS/SY
C2	RECYCLED ASPH. CONC. 19 mm SUPERPAVE, GP 1 OR GP 2, INCL. BITUM MATL & H LIME, 330 LBS/SY
D1	RECYCLED ASPH. CONC. 25 mm SUPERPAVE, GP 1 OR GP 2, INCL. BITUM MATL & H LIME, 440 LBS/SY
D2	RECYCLED ASPH. CONC. 25 mm SUPERPAVE, GP 1 OR GP 2, INCL. BITUM MATL & H LIME, 770 LBS/SY
D3	RECYCLED ASPH. CONC. 25 mm SUPERPAVE, GP 1 OR GP 2, INCL. BITUM MATL & H LIME, 1100 LBS/SY
E	GRADED AGGREGATE BASE COURSE, 12"
F	GRADED AGGREGATE BASE COURSE, 10"
G	PLAIN PC CONC PVMT, CL CONC, 12 INCH THK
H	PLAIN PC CONC PVMT, CL CONC, 10 INCH THK
I	CONCRETE CURB & GUTTER, 8" X 30", TYPE 2, GA STD. 9032 B
J	CONCRETE SIDEWALK, 4" THICK
K	CONCRETE MEDIAN BARRIER TP. S-2
L	CONCRETE MEDIAN, INTEGRAL, 7½" THICK, TYPE 7, GA STD. 9032 B
M	CONCRETE CURB & GUTTER, 8" X 30", TYPE 7, GA STD. 9032 B
N	RECYCLED ASPH. CONC. LEVELING, INCL. BITUM MATL & H LIME
O	MILL ASPH CONC PVMT, VARIABLE DEPTH
P	INDENTATION RUMBLE STRIPS - GROUND IN PLACE

(*) CONTINUOUS - GA DETAIL T-23C, T-25

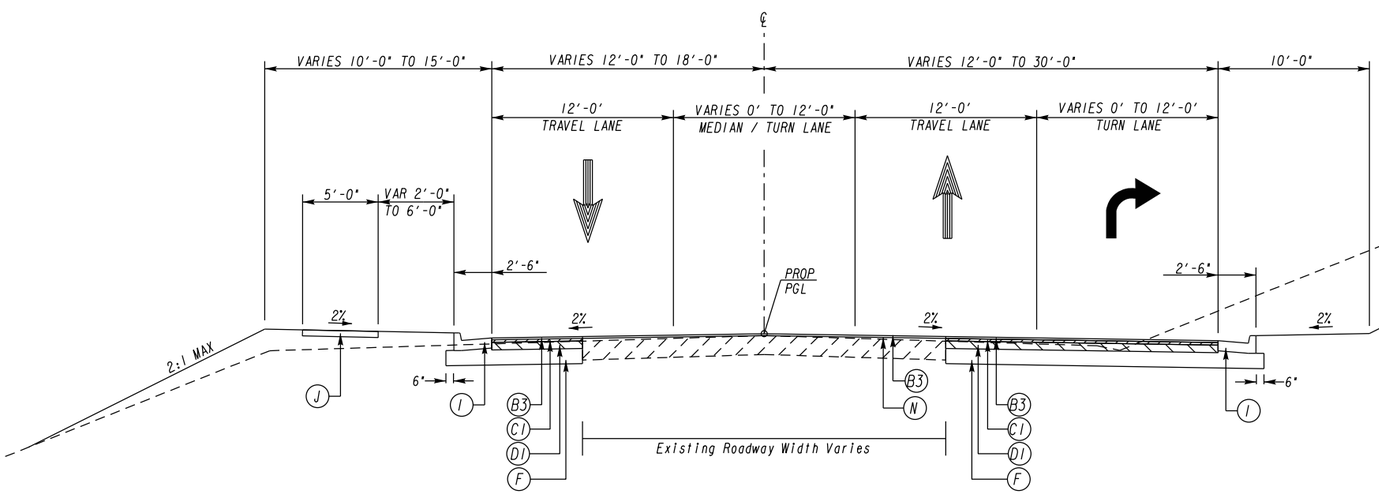

TYPICAL SECTION 8
HURRICANE SHOALS ROAD

ATKINS
Member of the SNC-Lavalin Group
1600 RiverEdge Parkway, NW
Suite 700
Atlanta, GA 30328
Tel: (770)933-0280
Fax: (770)933-1920
Copyright © Atkins Limited (2018) www.atkinsglobal.com/northamerica

(SCALE IN FEET)
H. 0 10 20 30
V. 0 10 20 30

REVISION DATES

TYPICAL SECTIONS
SR 316 FM CEDARS RD TO SUGARLOAF PKWY

CHECKED:		DATE:	
BACKCHECKED:		DATE:	
CORRECTED:		DATE:	
VERIFIED:		DATE:	

DRAWING No. 05-0007

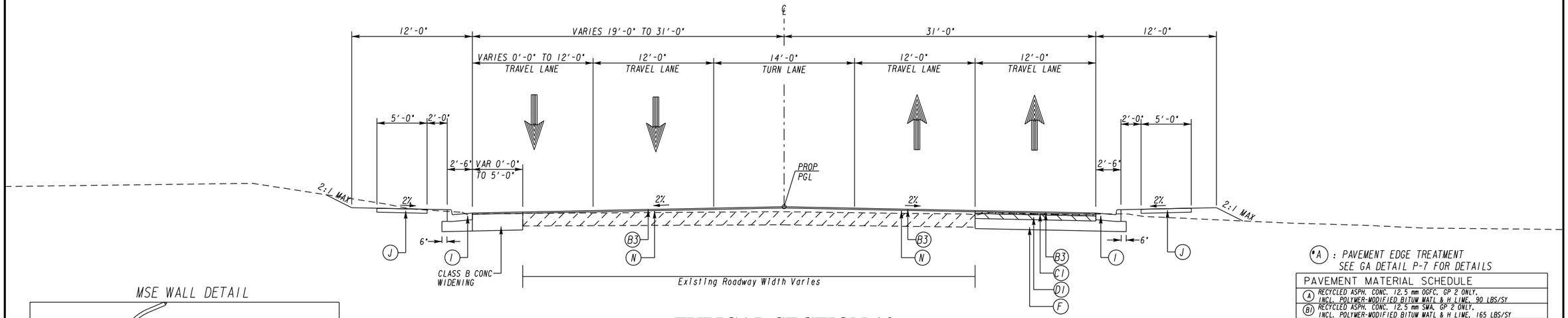

TYPICAL SECTION 10
HURRICANE TRAIL

(*A) : PAVEMENT EDGE TREATMENT
SEE GA DETAIL P-7 FOR DETAILS

PAVEMENT MATERIAL SCHEDULE	
A	RECYCLED ASPH. CONC. 12.5 mm OGFC, GP 2 ONLY, INCL. POLYMER-MODIFIED BITUM MATL & H LIME, 90 LBS/SY
B1	RECYCLED ASPH. CONC. 12.5 mm SMA, GP 2 ONLY, INCL. POLYMER-MODIFIED BITUM MATL & H LIME, 165 LBS/SY
B2	RECYCLED ASPH. CONC. 12.5 mm SUPERPAVE, GP 2 ONLY, INCL. POLYMER-MODIFIED BITUM MATL & H LIME, 165 LBS/SY
B3	RECYCLED ASPH. CONC. 12.5 mm SUPERPAVE, GP 2 ONLY, INCL. BITUM MATL & H LIME, 165 LBS/SY
C1	RECYCLED ASPH. CONC. 19 mm SUPERPAVE, GP 1 OR GP 2, INCL. BITUM MATL & H LIME, 220 LBS/SY
C2	RECYCLED ASPH. CONC. 19 mm SUPERPAVE, GP 1 OR GP 2, INCL. BITUM MATL & H LIME, 330 LBS/SY
D1	RECYCLED ASPH. CONC. 25 mm SUPERPAVE, GP 1 OR GP 2, INCL. BITUM MATL & H LIME, 440 LBS/SY
D2	RECYCLED ASPH. CONC. 25 mm SUPERPAVE, GP 1 OR GP 2, INCL. BITUM MATL & H LIME, 770 LBS/SY
D3	RECYCLED ASPH. CONC. 25 mm SUPERPAVE, GP 1 OR GP 2, INCL. BITUM MATL & H LIME, 1100 LBS/SY
E	GRADED AGGREGATE BASE COURSE, 12"
F	GRADED AGGREGATE BASE COURSE, 10"
G	PLAIN PC CONC PVMT, CL CONC, 12 INCH THK
H	PLAIN PC CONC PVMT, CL CONC, 10 INCH THK
I	CONCRETE CURB & GUTTER, 8" X 30", TYPE 2, GA STD. 9032 B
J	CONCRETE SIDEWALK, 4" THICK
K	CONCRETE MEDIAN BARRIER TP. S-2
L	CONCRETE MEDIAN, INTEGRAL, 7¼" THICK, TYPE 7, GA STD.9032 B
M	CONCRETE CURB & GUTTER, 8" X 30", TYPE 7, GA STD. 9032 B
N	RECYCLED ASPH. CONC. LEVELING, INCL. BITUM MATL & H LIME
O	MILL ASPH CONC PVMT, VARIABLE DEPTH
P	INDENTATION RUMBLE STRIPS - GROUND IN PLACE

(*) CONTINUOUS - GA DETAIL T-23C, T-25

MSE WALL DETAIL

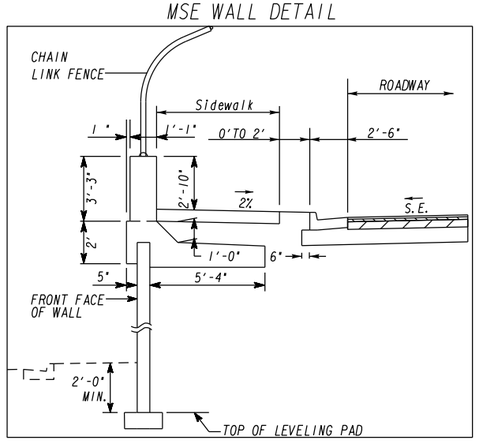

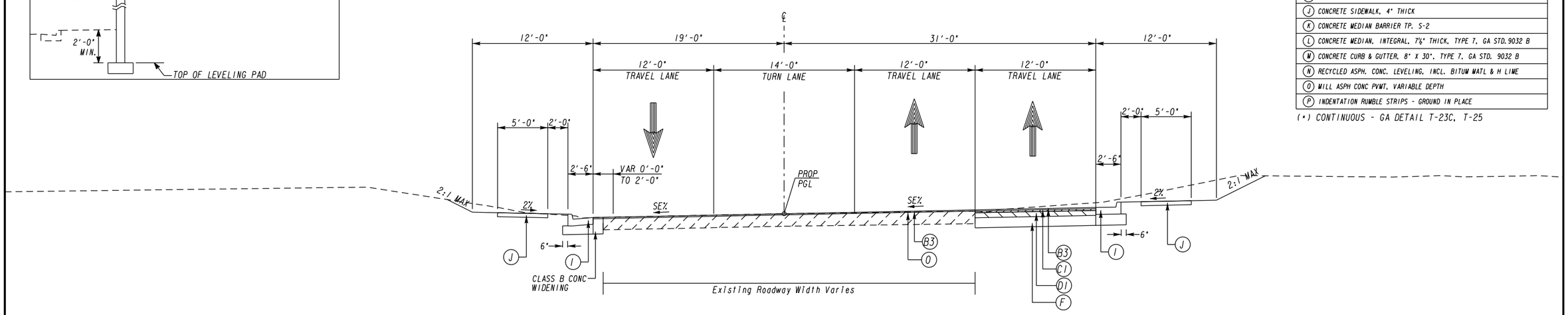

TYPICAL SECTION 9
HURRICANE TRAIL

ATKINS
Member of the SNC-Lavalin Group
1600 RiverEdge Parkway, NW
Suite 700
Atlanta, GA 30328
Tel: (770)933-0280
Fax: (770)933-1920
Copyright © Atkins Limited (2018) www.atkinsglobal.com/northamerica

(SCALE IN FEET)
H. 0 10 20 30
V. 0 10 20 30

REVISION DATES

TYPICAL SECTIONS
SR 316 FM CEDARS RD TO SUGARLOAF PKWY

CHECKED:		DATE:	
BACKCHECKED:		DATE:	
CORRECTED:		DATE:	
VERIFIED:		DATE:	

DRAWING No. 05-0008

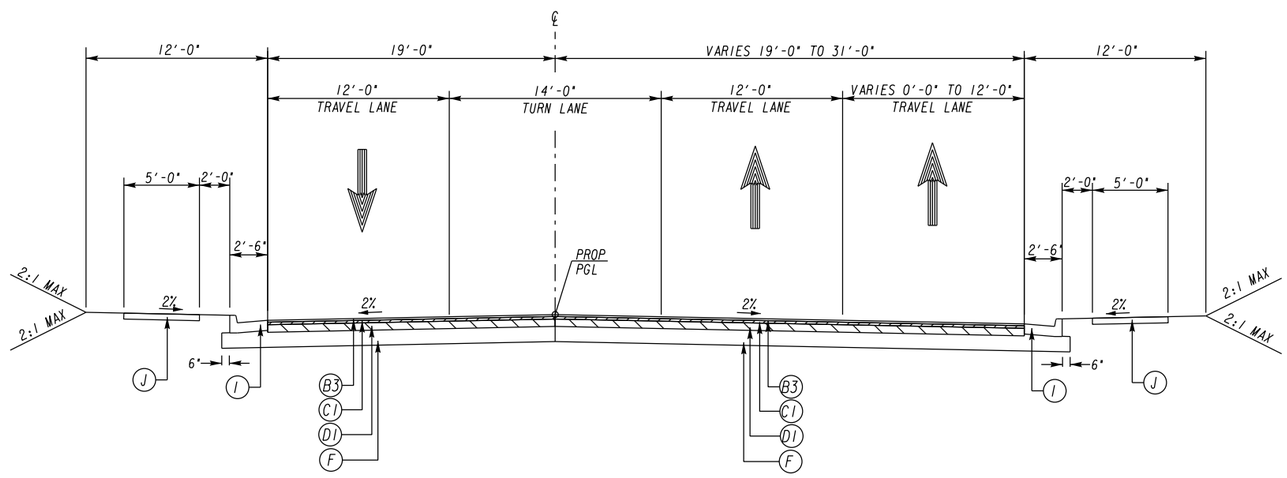

TYPICAL SECTION 11

HURRICANE TRAIL

(*A) : PAVEMENT EDGE TREATMENT
SEE GA DETAIL P-7 FOR DETAILS

PAVEMENT MATERIAL SCHEDULE
(A) RECYCLED ASPH. CONC. 12.5 mm OGFC, GP 2 ONLY. INCL. POLYMER-MODIFIED BITUM MATL & H LIME, 90 LBS/SY
(B1) RECYCLED ASPH. CONC. 12.5 mm SMA, GP 2 ONLY. INCL. POLYMER-MODIFIED BITUM MATL & H LIME, 165 LBS/SY
(B2) RECYCLED ASPH. CONC. 12.5 mm SUPERPAVE, GP 2 ONLY. INCL. POLYMER-MODIFIED BITUM MATL & H LIME, 165 LBS/SY
(B3) RECYCLED ASPH. CONC. 12.5 mm SUPERPAVE, GP 2 ONLY. INCL. BITUM MATL & H LIME, 165 LBS/SY
(C1) RECYCLED ASPH. CONC. 19 mm SUPERPAVE, GP 1 OR GP 2. INCL. BITUM MATL & H LIME, 220 LBS/SY
(C2) RECYCLED ASPH. CONC. 19 mm SUPERPAVE, GP 1 OR GP 2. INCL. BITUM MATL & H LIME, 330 LBS/SY
(D1) RECYCLED ASPH. CONC. 25 mm SUPERPAVE, GP 1 OR GP 2. INCL. BITUM MATL & H LIME, 440 LBS/SY
(D2) RECYCLED ASPH. CONC. 25 mm SUPERPAVE, GP 1 OR GP 2. INCL. BITUM MATL & H LIME, 770 LBS/SY
(D3) RECYCLED ASPH. CONC. 25 mm SUPERPAVE, GP 1 OR GP 2. INCL. BITUM MATL & H LIME, 1100 LBS/SY
(E) GRADED AGGREGATE BASE COURSE, 12"
(F) GRADED AGGREGATE BASE COURSE, 10"
(G) PLAIN PC CONC PVMT, CL CONC, 12 INCH THK
(H) PLAIN PC CONC PVMT, CL CONC, 10 INCH THK
(I) CONCRETE CURB & GUTTER, 8" X 30", TYPE 2, GA STD. 9032 B
(J) CONCRETE SIDEWALK, 4" THICK
(K) CONCRETE MEDIAN BARRIER TP. S-2
(L) CONCRETE MEDIAN, INTEGRAL, 7½" THICK, TYPE 7, GA STD. 9032 B
(M) CONCRETE CURB & GUTTER, 8" X 30", TYPE 7, GA STD. 9032 B
(N) RECYCLED ASPH. CONC. LEVELING, INCL. BITUM MATL & H LIME
(O) MILL ASPH CONC PVMT, VARIABLE DEPTH
(P) INDENTATION RUMBLE STRIPS - GROUND IN PLACE

(*) CONTINUOUS - GA DETAIL T-23C, T-25

ATKINS
Member of the SNC-Lavalin Group
1600 RiverEdge Parkway, NW
Suite 700
Atlanta, GA 30328
Tel: (770)933-0280
Fax: (770)933-1920
Copyright © Atkins Limited (2018) www.atkinsglobal.com/northamerica

(SCALE IN FEET)
H. 0 10 20 30
V. 0 10 20 30

REVISION DATES

TYPICAL SECTIONS

SR 316 FM CEDARS RD TO SUGARLOAF PKWY

CHECKED:		DATE:	
BACKCHECKED:		DATE:	
CORRECTED:		DATE:	
VERIFIED:		DATE:	

DRAWING No. 05-0009

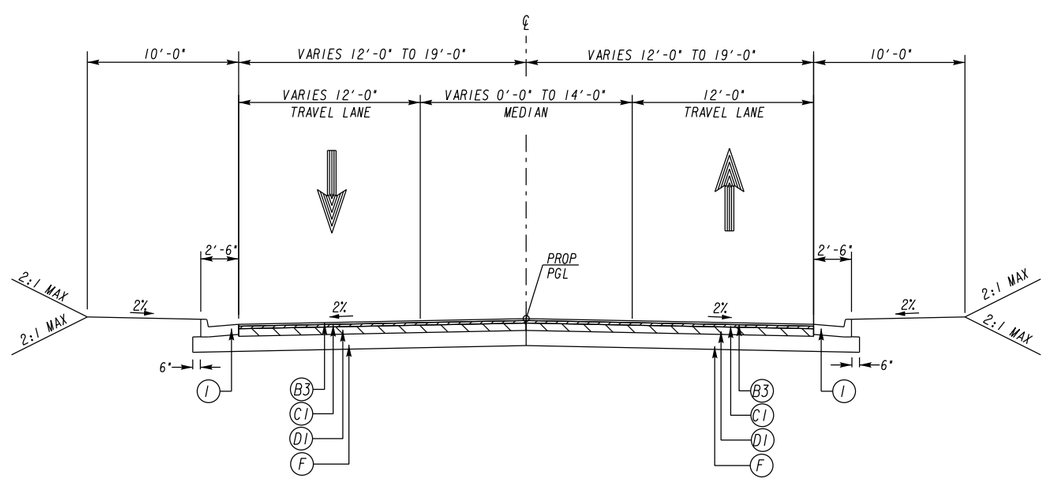

TYPICAL SECTION 12

HURRICANE TRAIL

(*A) : PAVEMENT EDGE TREATMENT
SEE GA DETAIL P-7 FOR DETAILS

PAVEMENT MATERIAL SCHEDULE
(A) RECYCLED ASPH. CONC. 12.5 mm OGFC, GP 2 ONLY, INCL. POLYMER-MODIFIED BITUM MATL & H LIME, 90 LBS/SY
(B1) RECYCLED ASPH. CONC. 12.5 mm SMA, GP 2 ONLY, INCL. POLYMER-MODIFIED BITUM MATL & H LIME, 165 LBS/SY
(B2) RECYCLED ASPH. CONC. 12.5 mm SUPERPAVE, GP 2 ONLY, INCL. POLYMER-MODIFIED BITUM MATL & H LIME, 165 LBS/SY
(B3) RECYCLED ASPH. CONC. 12.5 mm SUPERPAVE, GP 2 ONLY, INCL. BITUM MATL & H LIME, 165 LBS/SY
(C1) RECYCLED ASPH. CONC. 19 mm SUPERPAVE, GP 1 OR GP 2, INCL. BITUM MATL & H LIME, 220 LBS/SY
(C2) RECYCLED ASPH. CONC. 19 mm SUPERPAVE, GP 1 OR GP 2, INCL. BITUM MATL & H LIME, 330 LBS/SY
(D1) RECYCLED ASPH. CONC. 25 mm SUPERPAVE, GP 1 OR GP 2, INCL. BITUM MATL & H LIME, 440 LBS/SY
(D2) RECYCLED ASPH. CONC. 25 mm SUPERPAVE, GP 1 OR GP 2, INCL. BITUM MATL & H LIME, 770 LBS/SY
(D3) RECYCLED ASPH. CONC. 25 mm SUPERPAVE, GP 1 OR GP 2, INCL. BITUM MATL & H LIME, 1100 LBS/SY
(E) GRADED AGGREGATE BASE COURSE, 12"
(F) GRADED AGGREGATE BASE COURSE, 10"
(G) PLAIN PC CONC PVMT, CL CONC, 12 INCH THK
(H) PLAIN PC CONC PVMT, CL CONC, 10 INCH THK
(I) CONCRETE CURB & GUTTER, 8" X 30", TYPE 2, GA STD. 9032 B
(J) CONCRETE SIDEWALK, 4" THICK
(K) CONCRETE MEDIAN BARRIER TP. S-2
(L) CONCRETE MEDIAN, INTEGRAL, 7½" THICK, TYPE 7, GA STD. 9032 B
(M) CONCRETE CURB & GUTTER, 8" X 30", TYPE 7, GA STD. 9032 B
(N) RECYCLED ASPH. CONC. LEVELING, INCL. BITUM MATL & H LIME
(O) MILL ASPH CONC PVMT, VARIABLE DEPTH
(P) INDENTATION RUMBLE STRIPS - GROUND IN PLACE

(*) CONTINUOUS - GA DETAIL T-23C, T-25

ATKINS
Member of the SNC-Lavalin Group
1600 RiverEdge Parkway, NW
Suite 700
Atlanta, GA 30328
Tel: (770)933-0280
Fax: (770)933-1920
Copyright © Atkins Limited (2018) www.atkinsglobal.com/northamerica

(SCALE IN FEET)
H. 0 10 20 30
V. 0 10 20 30

REVISION DATES

TYPICAL SECTIONS

SR 316 FM CEDARS RD TO SUGARLOAF PKWY

CHECKED:		DATE:		DRAWING No.
BACKCHECKED:		DATE:		05-0010
CORRECTED:		DATE:		
VERIFIED:		DATE:		

(*A) : PAVEMENT EDGE TREATMENT
SEE GA DETAIL P-7 FOR DETAILS

PAVEMENT MATERIAL SCHEDULE	
A	RECYCLED ASPH. CONC. 12.5 mm OGFC, GP 2 ONLY, INCL. POLYMER-MODIFIED BITUM MATL & H LIME, 90 LBS/SY
B1	RECYCLED ASPH. CONC. 12.5 mm SMA, GP 2 ONLY, INCL. POLYMER-MODIFIED BITUM MATL & H LIME, 165 LBS/SY
B2	RECYCLED ASPH. CONC. 12.5 mm SUPERPAVE, GP 2 ONLY, INCL. POLYMER-MODIFIED BITUM MATL & H LIME, 165 LBS/SY
B3	RECYCLED ASPH. CONC. 12.5 mm SUPERPAVE, GP 2 ONLY, INCL. BITUM MATL & H LIME, 165 LBS/SY
C1	RECYCLED ASPH. CONC. 19 mm SUPERPAVE, GP 1 OR GP 2, INCL. BITUM MATL & H LIME, 220 LBS/SY
C2	RECYCLED ASPH. CONC. 19 mm SUPERPAVE, GP 1 OR GP 2, INCL. BITUM MATL & H LIME, 330 LBS/SY
D1	RECYCLED ASPH. CONC. 25 mm SUPERPAVE, GP 1 OR GP 2, INCL. BITUM MATL & H LIME, 440 LBS/SY
D2	RECYCLED ASPH. CONC. 25 mm SUPERPAVE, GP 1 OR GP 2, INCL. BITUM MATL & H LIME, 770 LBS/SY
D3	RECYCLED ASPH. CONC. 25 mm SUPERPAVE, GP 1 OR GP 2, INCL. BITUM MATL & H LIME, 1100 LBS/SY
E	GRADED AGGREGATE BASE COURSE, 12"
F	GRADED AGGREGATE BASE COURSE, 10"
G	PLAIN PC CONC PVMT, CL CONC, 12 INCH THK
H	PLAIN PC CONC PVMT, CL CONC, 10 INCH THK
I	CONCRETE CURB & GUTTER, 8" X 30", TYPE 2, GA STD. 9032 B
J	CONCRETE SIDEWALK, 4" THICK
K	CONCRETE MEDIAN BARRIER TP. S-2
L	CONCRETE MEDIAN, INTEGRAL, 7½" THICK, TYPE 7, GA STD. 9032 B
M	CONCRETE CURB & GUTTER, 8" X 30", TYPE 7, GA STD. 9032 B
N	RECYCLED ASPH. CONC. LEVELING, INCL. BITUM MATL & H LIME
O	MILL ASPH CONC PVMT, VARIABLE DEPTH
P	INDENTATION RUMBLE STRIPS - GROUND IN PLACE

(*) CONTINUOUS - GA DETAIL T-23C, T-25

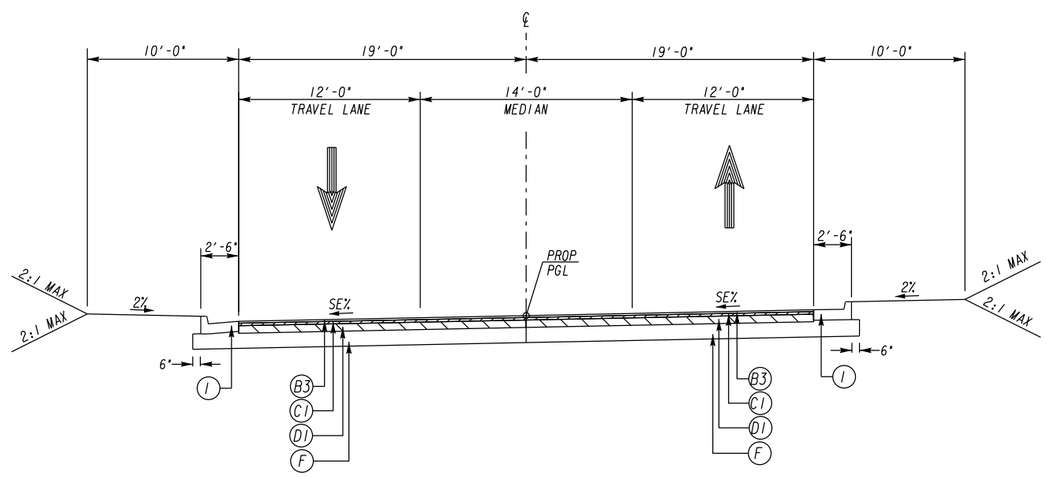

TYPICAL SECTION 13

FENCE ROAD CONNECTOR

ATKINS
Member of the SNC-Lavalin Group
1600 RiverEdge Parkway, NW
Suite 700
Atlanta, GA 30328
Tel: (770)933-0280
Fax: (770)933-1920
Copyright © Atkins Limited (2018) www.atkinsglobal.com/northamerica

(SCALE IN FEET)
H. 0 10 20 30
V. 0 10 20 30

REVISION DATES

TYPICAL SECTIONS

SR 316 FM CEDARS RD TO SUGARLOAF PKWY

CHECKED:		DATE:		DRAWING No.
BACKCHECKED:		DATE:		05-0011
CORRECTED:		DATE:		
VERIFIED:		DATE:		

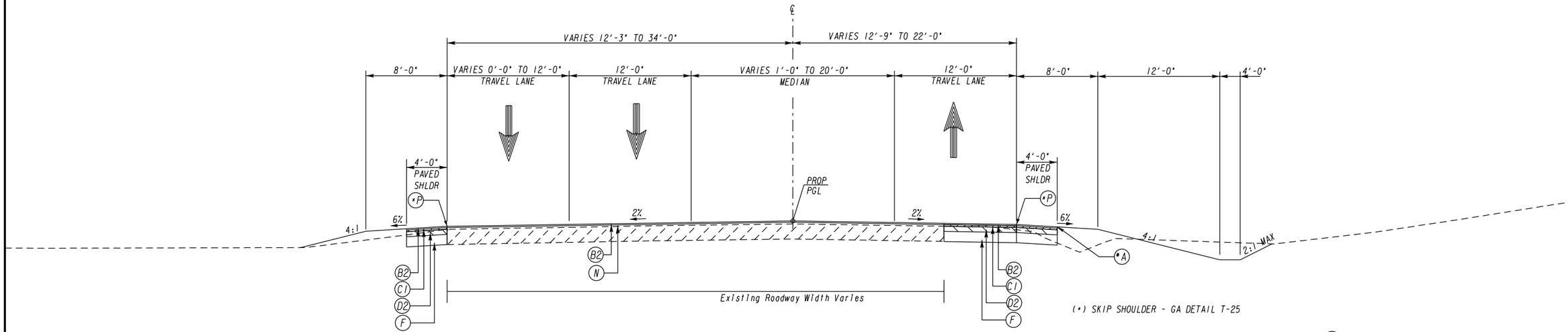

(•) SKIP SHOULDER - GA DETAIL T-25

TYPICAL SECTION 15

US 29/SR 8 WINDER HWY

(•A) : PAVEMENT EDGE TREATMENT
SEE GA DETAIL P-7 FOR DETAILS

PAVEMENT MATERIAL SCHEDULE	
A	RECYCLED ASPH. CONC. 12.5 mm OGFC, GP 2 ONLY. INCL. POLYMER-MODIFIED BITUM MATL & H LIME, 90 LBS/SY
B1	RECYCLED ASPH. CONC. 12.5 mm SMA, GP 2 ONLY. INCL. POLYMER-MODIFIED BITUM MATL & H LIME, 165 LBS/SY
B2	RECYCLED ASPH. CONC. 12.5 mm SUPERPAVE, GP 2 ONLY. INCL. POLYMER-MODIFIED BITUM MATL & H LIME, 165 LBS/SY
B3	RECYCLED ASPH. CONC. 12.5 mm SUPERPAVE, GP 2 ONLY. INCL. BITUM MATL & H LIME, 165 LBS/SY
C1	RECYCLED ASPH. CONC. 19 mm SUPERPAVE, GP 1 OR GP 2. INCL. BITUM MATL & H LIME, 220 LBS/SY
C2	RECYCLED ASPH. CONC. 19 mm SUPERPAVE, GP 1 OR GP 2. INCL. BITUM MATL & H LIME, 330 LBS/SY
D1	RECYCLED ASPH. CONC. 25 mm SUPERPAVE, GP 1 OR GP 2. INCL. BITUM MATL & H LIME, 440 LBS/SY
D2	RECYCLED ASPH. CONC. 25 mm SUPERPAVE, GP 1 OR GP 2. INCL. BITUM MATL & H LIME, 770 LBS/SY
D3	RECYCLED ASPH. CONC. 25 mm SUPERPAVE, GP 1 OR GP 2. INCL. BITUM MATL & H LIME, 1100 LBS/SY
E	GRADED AGGREGATE BASE COURSE, 12"
F	GRADED AGGREGATE BASE COURSE, 10"
G	PLAIN PC CONC PVMT, CL CONC, 12 INCH THK
H	PLAIN PC CONC PVMT, CL CONC, 10 INCH THK
I	CONCRETE CURB & GUTTER, 8" X 30", TYPE 2, GA STD. 9032 B
J	CONCRETE SIDEWALK, 4" THICK
K	CONCRETE MEDIAN BARRIER TP. S-2
L	CONCRETE MEDIAN, INTEGRAL, 7½" THICK, TYPE 7, GA STD.9032 B
M	CONCRETE CURB & GUTTER, 8" X 30", TYPE 7, GA STD. 9032 B
N	RECYCLED ASPH. CONC. LEVELING, INCL. BITUM MATL & H LIME
O	MILL ASPH CONC PVMT, VARIABLE DEPTH
P	INDENTATION RUMBLE STRIPS - GROUND IN PLACE

(•) CONTINUOUS - GA DETAIL T-23C, T-25

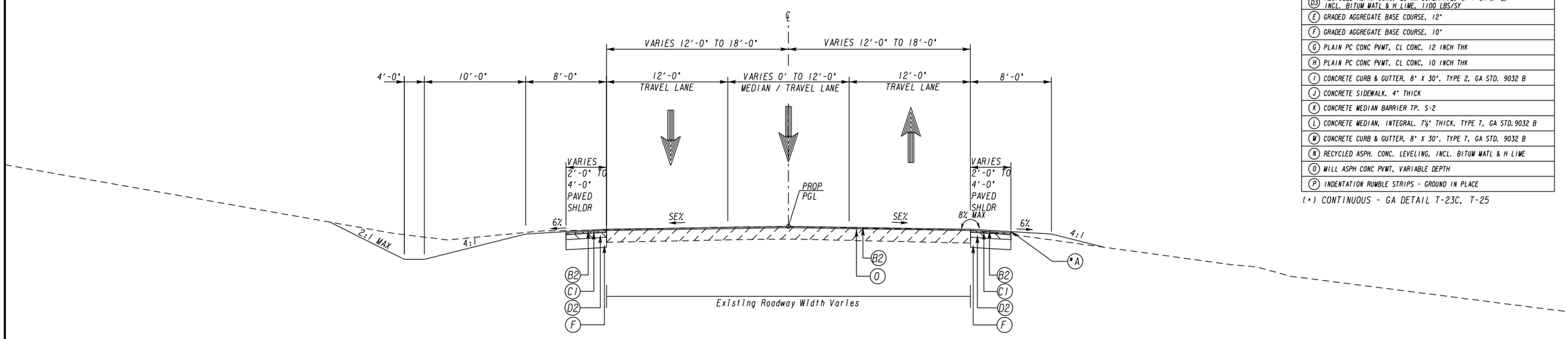

TYPICAL SECTION 14

US 29/SR 8 WINDER HWY

ATKINS
Member of the SNC-Lavalin Group
1600 RiverEdge Parkway, NW
Suite 700
Atlanta, GA 30328
Tel: (770)933-0280
Fax: (770)933-1920
Copyright © Atkins Limited (2018) www.atkinsglobal.com/northamerica

(SCALE IN FEET)
H. 0 10 20 30
V. 0 10 20 30

REVISION DATES

TYPICAL SECTIONS

SR 316 FM CEDARS RD TO SUGARLOAF PKWY

CHECKED:		DATE:	
BACKCHECKED:		DATE:	
CORRECTED:		DATE:	
VERIFIED:		DATE:	

DRAWING No. 05-0012

*A : PAVEMENT EDGE TREATMENT
SEE GA DETAIL P-7 FOR DETAILS

PAVEMENT MATERIAL SCHEDULE
A RECYCLED ASPH. CONC. 12.5 mm OGFC, GP 2 ONLY, INCL. POLYMER-MODIFIED BITUM MATL & H LIME, 90 LBS/SY
B1 RECYCLED ASPH. CONC. 12.5 mm SMA, GP 2 ONLY, INCL. POLYMER-MODIFIED BITUM MATL & H LIME, 165 LBS/SY
B2 RECYCLED ASPH. CONC. 12.5 mm SUPERPAVE, GP 2 ONLY, INCL. POLYMER-MODIFIED BITUM MATL & H LIME, 165 LBS/SY
B3 RECYCLED ASPH. CONC. 12.5 mm SUPERPAVE, GP 2 ONLY, INCL. BITUM MATL & H LIME, 165 LBS/SY
C1 RECYCLED ASPH. CONC. 19 mm SUPERPAVE, GP 1 OR GP 2, INCL. BITUM MATL & H LIME, 220 LBS/SY
C2 RECYCLED ASPH. CONC. 19 mm SUPERPAVE, GP 1 OR GP 2, INCL. BITUM MATL & H LIME, 330 LBS/SY
D1 RECYCLED ASPH. CONC. 25 mm SUPERPAVE, GP 1 OR GP 2, INCL. BITUM MATL & H LIME, 440 LBS/SY
D2 RECYCLED ASPH. CONC. 25 mm SUPERPAVE, GP 1 OR GP 2, INCL. BITUM MATL & H LIME, 770 LBS/SY
D3 RECYCLED ASPH. CONC. 25 mm SUPERPAVE, GP 1 OR GP 2, INCL. BITUM MATL & H LIME, 1100 LBS/SY
E GRADED AGGREGATE BASE COURSE, 12"
F GRADED AGGREGATE BASE COURSE, 10"
G PLAIN PC CONC PVMT, CL CONC, 12 INCH THK
H PLAIN PC CONC PVMT, CL CONC, 10 INCH THK
I CONCRETE CURB & GUTTER, 8" X 30", TYPE 2, GA STD. 9032 B
J CONCRETE SIDEWALK, 4" THICK
K CONCRETE MEDIAN BARRIER TP. S-2
L CONCRETE MEDIAN, INTEGRAL, 7½" THICK, TYPE 7, GA STD.9032 B
M CONCRETE CURB & GUTTER, 8" X 30", TYPE 7, GA STD. 9032 B
N RECYCLED ASPH. CONC. LEVELING, INCL. BITUM MATL & H LIME
O MILL ASPH CONC PVMT, VARIABLE DEPTH
P INDENTATION RUMBLE STRIPS - GROUND IN PLACE

(*) CONTINUOUS - GA DETAIL T-23C, T-25

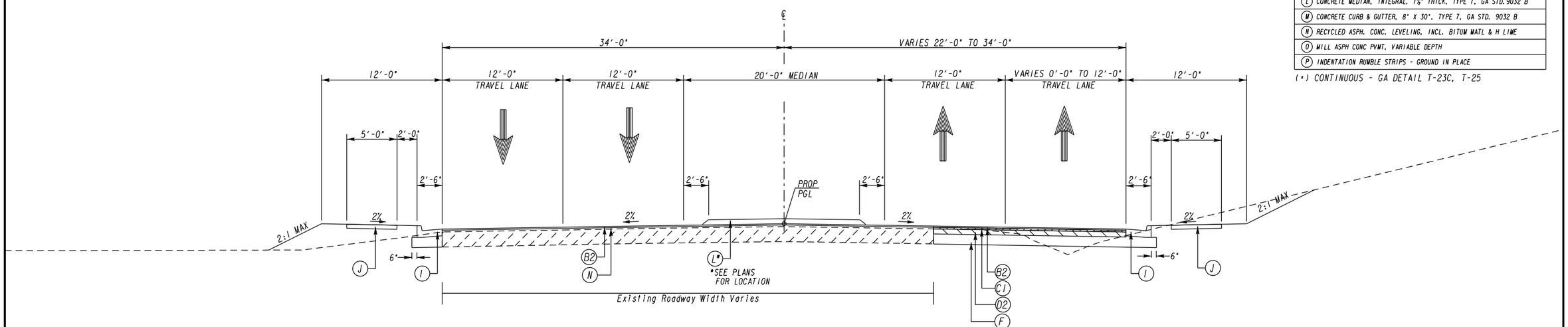

TYPICAL SECTION 16

US 29/SR 8 WINDER HWY

ATKINS
Member of the SNC-Lavalin Group
1600 RiverEdge Parkway, NW
Suite 700
Atlanta, GA 30328
Tel: (770)933-0280
Fax: (770)933-1920
Copyright © Atkins Limited (2018) www.atkinsglobal.com/northamerica

(SCALE IN FEET)
H. 0 10 20 30
V. 0 10 20 30

REVISION DATES

TYPICAL SECTIONS

SR 316 FM CEDARS RD TO SUGARLOAF PKWY

CHECKED:		DATE:	
BACKCHECKED:		DATE:	
CORRECTED:		DATE:	
VERIFIED:		DATE:	

DRAWING No. 05-0013

MSE WALL DETAIL

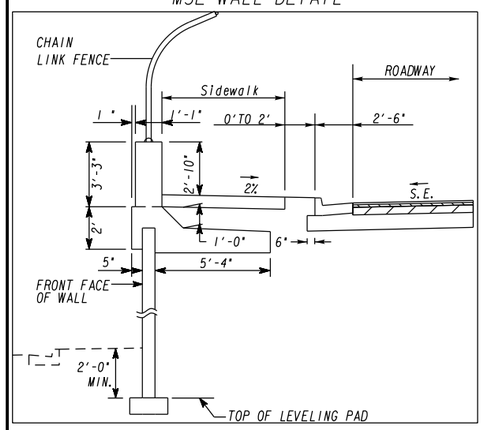

(*A) : PAVEMENT EDGE TREATMENT
SEE GA DETAIL P-7 FOR DETAILS

PAVEMENT MATERIAL SCHEDULE	
A	RECYCLED ASPH. CONC. 12.5 mm OGFC, GP 2 ONLY, INCL. POLYMER-MODIFIED BITUM MATL & H LIME, 90 LBS/SY
B1	RECYCLED ASPH. CONC. 12.5 mm SMA, GP 2 ONLY, INCL. POLYMER-MODIFIED BITUM MATL & H LIME, 165 LBS/SY
B2	RECYCLED ASPH. CONC. 12.5 mm SUPERPAVE, GP 2 ONLY, INCL. POLYMER-MODIFIED BITUM MATL & H LIME, 165 LBS/SY
B3	RECYCLED ASPH. CONC. 12.5 mm SUPERPAVE, GP 2 ONLY, INCL. BITUM MATL & H LIME, 165 LBS/SY
C1	RECYCLED ASPH. CONC. 19 mm SUPERPAVE, GP 1 OR GP 2, INCL. BITUM MATL & H LIME, 220 LBS/SY
C2	RECYCLED ASPH. CONC. 19 mm SUPERPAVE, GP 1 OR GP 2, INCL. BITUM MATL & H LIME, 330 LBS/SY
D1	RECYCLED ASPH. CONC. 25 mm SUPERPAVE, GP 1 OR GP 2, INCL. BITUM MATL & H LIME, 440 LBS/SY
D2	RECYCLED ASPH. CONC. 25 mm SUPERPAVE, GP 1 OR GP 2, INCL. BITUM MATL & H LIME, 770 LBS/SY
D3	RECYCLED ASPH. CONC. 25 mm SUPERPAVE, GP 1 OR GP 2, INCL. BITUM MATL & H LIME, 1100 LBS/SY
E	GRADED AGGREGATE BASE COURSE, 12"
F	GRADED AGGREGATE BASE COURSE, 10"
G	PLAIN PC CONC PVMT, CL CONC, 12 INCH THK
H	PLAIN PC CONC PVMT, CL CONC, 10 INCH THK
I	CONCRETE CURB & GUTTER, 8" X 30", TYPE 2, GA STD. 9032 B
J	CONCRETE SIDEWALK, 4" THICK
K	CONCRETE MEDIAN BARRIER TP. S-2
L	CONCRETE MEDIAN, INTEGRAL, 7½" THICK, TYPE 7, GA STD.9032 B
M	CONCRETE CURB & GUTTER, 8" X 30", TYPE 7, GA STD. 9032 B
N	RECYCLED ASPH. CONC. LEVELING, INCL. BITUM MATL & H LIME
O	MILL ASPH CONC PVMT, VARIABLE DEPTH
P	INDENTATION RUMBLE STRIPS - GROUND IN PLACE

(*) CONTINUOUS - GA DETAIL T-23C, T-25

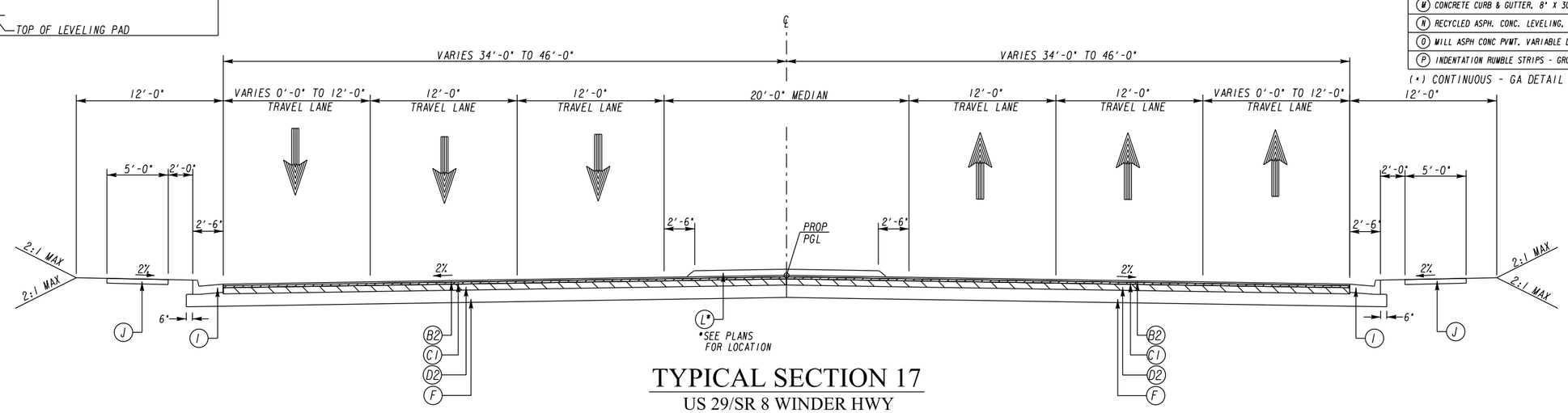

TYPICAL SECTION 17

US 29/SR 8 WINDER HWY

ATKINS
Member of the SNC-Lavalin Group
1600 RiverEdge Parkway, NW
Suite 700
Atlanta, GA 30328
Tel: (770)933-0280
Fax: (770)933-1920
Copyright © Atkins Limited (2018) www.atkinsglobal.com/northamerica

(SCALE IN FEET)
H. 0 10 20 30
V. 0 10 20 30

REVISION DATES

TYPICAL SECTIONS

SR 316 FM CEDARS RD TO SUGARLOAF PKWY

CHECKED:		DATE:		DRAWING No.
BACKCHECKED:		DATE:		05-0014
CORRECTED:		DATE:		
VERIFIED:		DATE:		

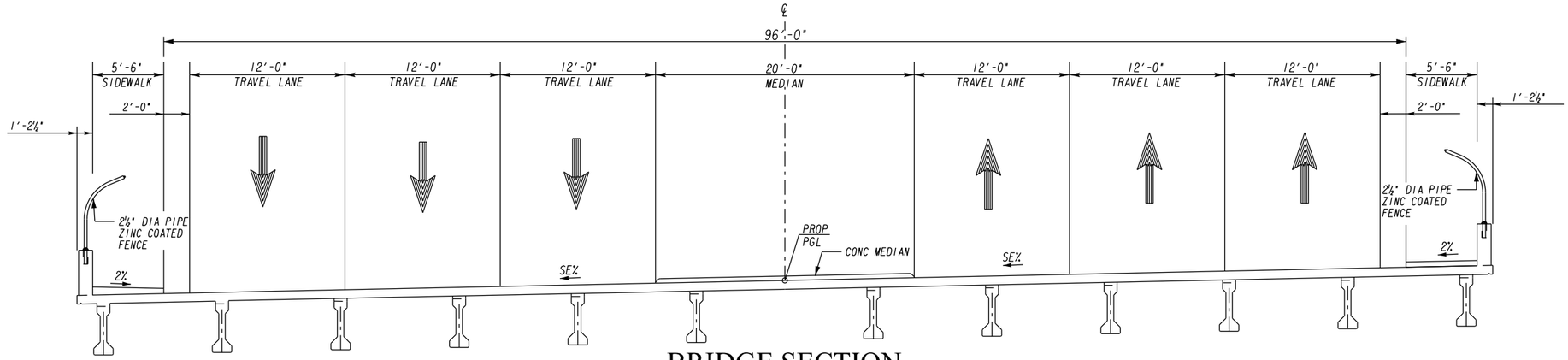

BRIDGE SECTION
US 29/SR 8 WINDER HWY

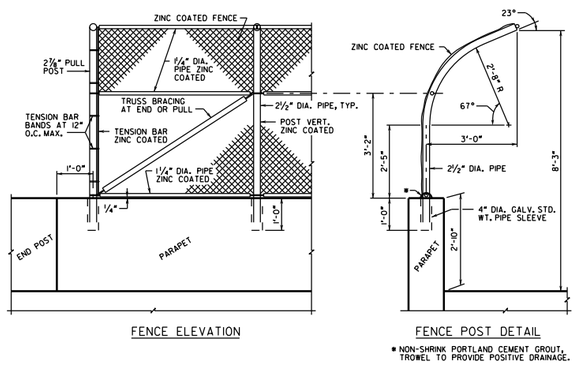

FENCE ELEVATION

FENCE POST DETAIL

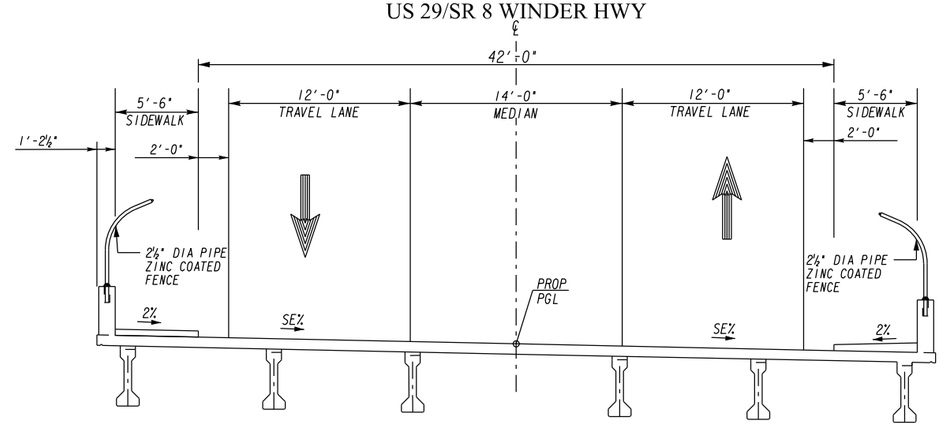

BRIDGE SECTION
HURRICANE TRAIL

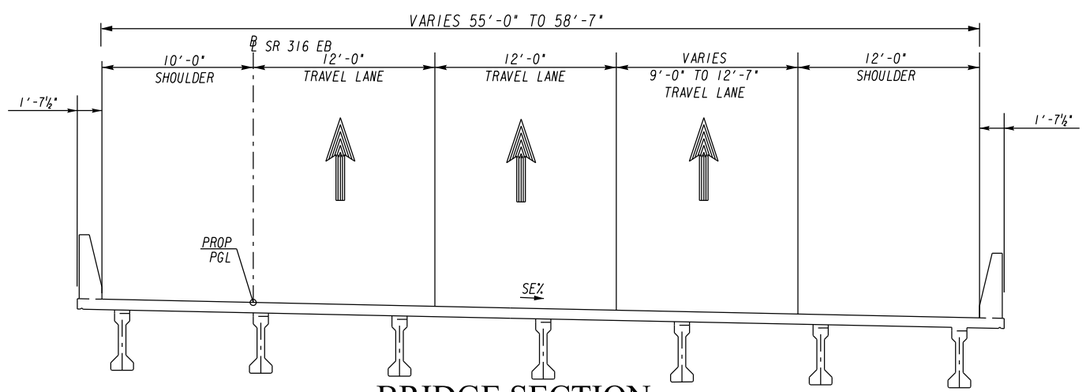

BRIDGE SECTION
SR 316 EB

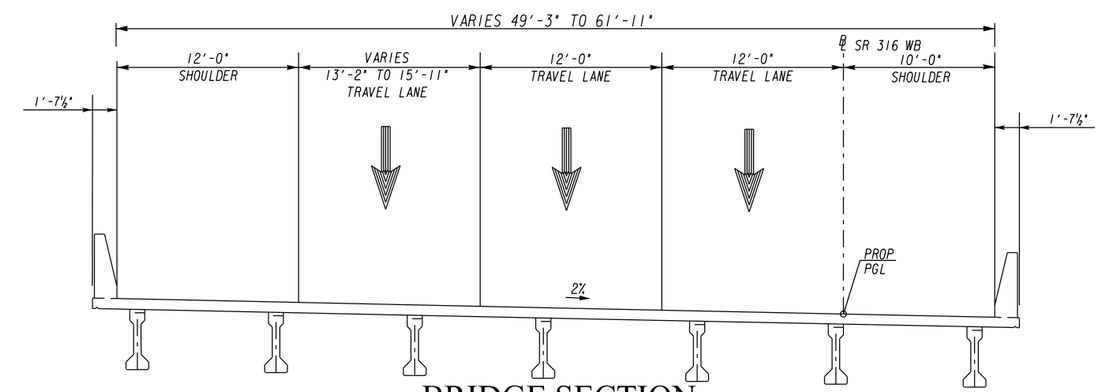

BRIDGE SECTION
SR 316 WB

ATKINS
Member of the SNC-Lavalin Group
1600 RiverEdge Parkway, NW
Suite 700
Atlanta, GA 30328
Tel: (770)933-0280
Fax: (770)933-1920
Copyright © Atkins Limited (2018) www.atkinsglobal.com/northamerica

(SCALE IN FEET)
H. 0 10 20 30
V. 0 10 20 30

REVISION DATES

TYPICAL SECTIONS
SR 316 FM CEDARS RD TO SUGARLOAF PKWY

CHECKED:		DATE:	
BACKCHECKED:		DATE:	
CORRECTED:		DATE:	
VERIFIED:		DATE:	

DRAWING No. 05-0015

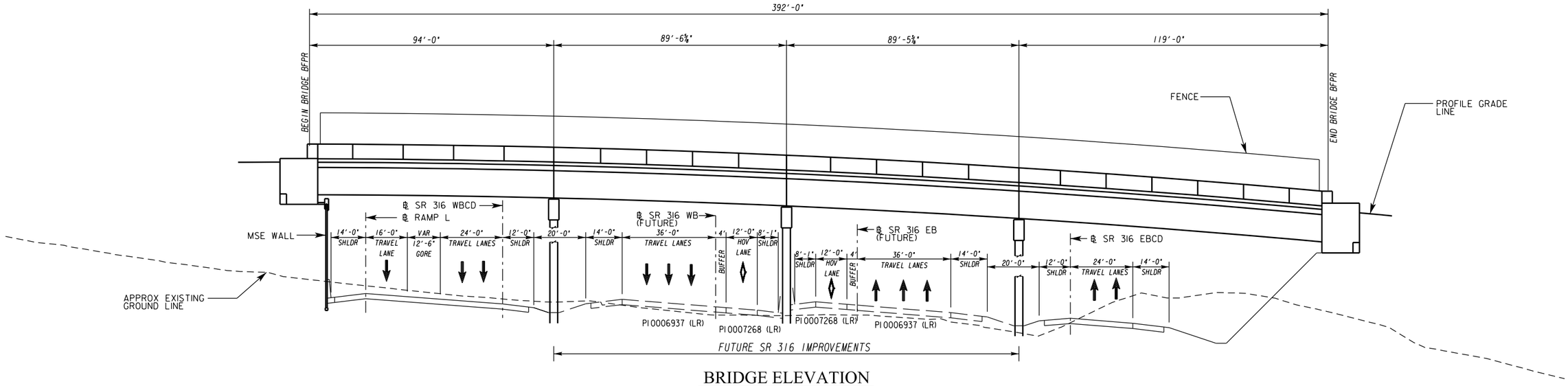

BRIDGE ELEVATION
SR 316 AT HURRICANE TRAIL

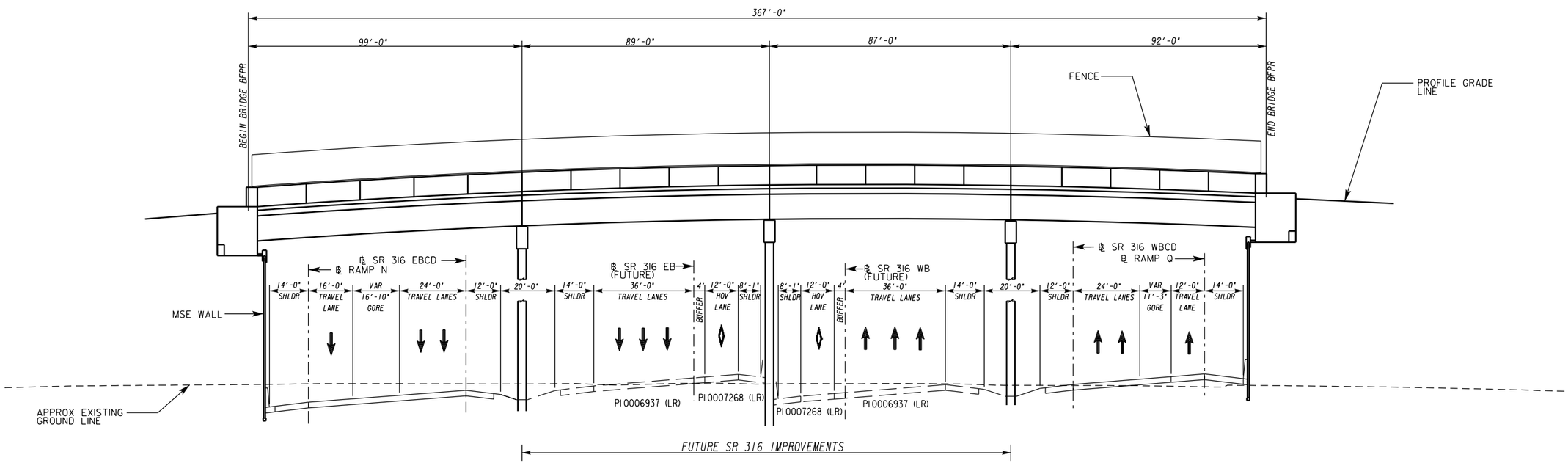

BRIDGE ELEVATION
SR 316 AT US 29 - SR 8/WINDER HWY

ATKINS
Member of the SNC-Lavalin Group
1600 RiverEdge Parkway, NW
Suite 700
Atlanta, GA 30328
Tel: (770)933-0280
Fax: (770)933-1920
Copyright © Atkins Limited (2018) www.atkinsglobal.com/northamerica

(SCALE IN FEET)
H. 0 20 40 60
V. 0 10 20 30

REVISION DATES

TYPICAL SECTIONS
SR 316 FM CEDARS RD TO SUGARLOAF PKWY

CHECKED:		DATE:	
BACKCHECKED:		DATE:	
CORRECTED:		DATE:	
VERIFIED:		DATE:	

DRAWING No. 05-0016

Attachment 4

Detailed Cost Estimates

Georgia Department of Transportation

Interoffice Memo

FILE

PI NUMBER	0013895	PROJECT DESCRIPTION	SR 316 from CR 1996/Hurricane Trail to CR 5661/Fence Road (include interchange at Hurricane Trail and private road to provide access to a commercial property)
OFFICE	Program Delivery		
DATE	Friday, November 15, 2019		

From: Kimberly Nesbitt, State Program Delivery Administrator

To: Erik Rohde, P.E., State Project Review Engineer
via email Mailbox: CostEstimatesandUpdates@dot.ga.gov

Subject: **REVISIONS TO PROGRAMMED COSTS**

Project Manager:	Chad White
Management Let Date:	10/15/2022
Managment Right of Way Date:	1/15/2021

Summary of Programmed Costs and Proposed Revised Costs:

Estimate Type	Programmed Costs (T-Pro Without Inflation)	Last Estimate Date	Revised Cost Estimate
CONSTRUCTION	$43,500,000.00	11/06/2019	$51,927,049.42
RIGHT OF WAY	$7,000,000.00	03/18/2019	$6,056,000.00
UTILITIES	$4,000,000.00	06/21/2019	$1,434,000.00

Explanation for Cost Increase and Contingency Justification:

Cost increase letter included as attachment.

Attachments:

Cost Increase Letter
QC/QA Certification
Detailed Cost Estimate Printout
Reimbursable Utilities Cost Estimate
ROW Cost Estimate
Cost Estimate Worksheet

Interoffice Memo

Design Phase Leader Validation of Final QC/QA for Construction Cost Estimate Used In This Revision to Programmed Costs:

Consultant Company or GDOT Design Office:	Atkins

Printed Name:	Scott Shelton

Title:	Project Manager

Signature:	

Date:	11/15/2019

Georgia Department of Transportation

Interoffice Memo

Cost Estimate Worksheet:

CONSTRUCTION COST ESTIMATE (Required base estimate entered from CES and should not include E&I). →	**A**	$ 44,333,139.98
ENGINEERING AND INSPECTION (The default E&I percentage is 5.0%, but may be adjusted per project scope.) →	**D**	$ 2,216,657.00

Construction Cost	E&I Percentage	E&I Cost
B	C	D = B x C
$ 44,333,139.98	5%	$ 2,216,657.00

CONTINGENCY (Refer to the Risk and Contingencies Table included in GDOT Policy 3A-9 Cost Estimating Purpose) →	**I**	$ 4,654,979.70

Construction Cost	E&I Cost	Construction + E&I	Contingency Percentage	Contingency Cost
E	F	G = E + F	H	I = G x H
$ 44,333,139.98	$ 2,216,657.00	$ 46,549,796.98	10%	$ 4,654,979.70

ASPHALT FUEL PRICE ADJUSTMENT (Leave blank if not applicable) →	**Q**	$ 722,272.74

Date	Nov 2019
Regular Unleaded	$2.432/ GAL
Diesel	$2.927/ GAL
Liquid AC	$502.00/ TON

Current Asphalt Fuel Index Prices can be found at the link below:

http://www.dot.ga.gov/PS/Materials/AsphaltFuelIndex

		Tons	Percentage of Asphaltic Concrete	Tons of Asphaltic Concrete	Total Monthly Tonnage of Asphalt Cement (TMT)	Monthly Asphalt Cement Price month project let (APL)	Max. Cap	Monthly Asphalt Cement Price month placed (APM)	Price Adjustment (PA)
Liquid AC	Description	J	K	L = J x K	M = Sum of Columns L, T & W	N	O	P = (N x O)+N	Q = [((P - N) / N)] x M x N
	Leveling				2397.98 TN	$502.00/ TON	60%	$ 803.20	$ 722,272.74
	9.5 mm SP								
	12.5 OGFC	1300.00 TN	5.00%	65.00 TN					
	12.5 PEM								
	12.5 mm SP	4600.00 TN	5.00%	230.00 TN					
	19 mm SP	19200.00 TN	5.00%	960.00 TN					
	25 mm SP	21700.00 TN	5.00%	1085.00 TN					
Bituminous Tack Coat		Tack Coat	GL/TN	Tons					
	Description	R	S	T = R/S					
	Tack Coat	13500.00 GL	232.8234 GL/TN	57.98 TN					
Bituminous Tack Coat (Surface Treatment)		SY	GL/SY	TN					
	Description	U	V	W = (U x V) / (232.8234 GL/TN)					
	Single Surface Treatment		0.20 Gl/SY						
	Double Surface Treatment		0.44 Gl/SY						
	Triple Surface Treatment		0.71 Gl/SY						

CONSTRUCTION TOTAL COST →	**X = A+D+I+Q**	$ 51,927,049.42
RIGHT OF WAY COST →	**Y**	$ 6,056,000.00
UTILITIES COST (Provided by Utility Office) →	**Z = Sum of Reimbursable Costs**	$ 1,434,000.00

Utility Owner	Reimbursable Cost	Utility Owner	Reimbursable Cost
Jackson EMC	$ 250,000.00		
Bellsouth (AT&T) - Local	$ 135,000.00		
City of Lawrenceville Gas	$ -		
Colonila Pipeline Co.	$ -		
Williams-Transco Gas Pipeline	$ 125,000.00		
Gwinnett Co Water	$ 60,000.00		
Gwinnett Co Sewer	$ 409,000.00		
CSX Transportation	$ 455,000.00		

Atkins North America, Inc.
1600 RiverEdge Parkway, NW, Suite 700
Atlanta, Georgia 30328
Telephone: +1.770.933.0280
www.atkinsglobal.com/northamerica

November 15, 2019

Scott Shelton
Project Manager
ATKINS North America, Inc.
1600 RiverEdge Parkway NW, Suite 700
Atlanta, GA 30135

SUBJECT: Description of Cost Increase for PI No. 0013895 SR 316 from CR 1996/Hurricane Trail to CR 5661/Fence Road (Including interchange on SR 316 at Hurricane Trail and private road to commercial property), located in Gwinnett County, Georgia

Dear Mr. White:

The intent of this letter is to provide justification to the increased construction cost shown in the current concept report compared to what's shown in GDOT's programmed cost database. The current construction programed estimate is $43,500,000. As part of our conceptual design layout for grade separation, estimated quantities with associated costs were put into GDOT's Cost Estimating System (CES) using the most recent construction bid item costs. As a result, the estimated construction cost increased to $51,927,049.42. This cost is consistent with other grade separated projects in the state.

Sincerely,

ATKINS North America, Inc.

Scott Shelton
Project Manager

STATE HIGHWAY AGENCY

DATE : 11/06/2019
PAGE : 1

JOB ESTIMATE REPORT

JOB NUMBER : 013895 SPEC YEAR: 13
DESCRIPTION: SR 316 FROM CEDARS RD TO SUGARLOAF PKWY
FROM CEDARS RD TO CSX RAILROAD

COST GROUPS FOR JOB 013895

COST GROUP	DESCRIPTION	QUANTITY	PRICE	AMOUNT	ACTIVE?
UDEF	SIGNS AND MARKING	1.000	2659600.00000	2659600.00	Y
UDEF	DRAINAGE	1.000	3989400.00000	3989400.00	Y
SGNL	TRAFFIC SIGNALS (LS)	3.000	150000.00000	450000.00	Y
UDEF	ATMS	1.000	1329800.00000	1329800.00	Y
UDEF	TEMPORARY EROSION CONTROL	1.000	2659600.00000	2659600.00	Y
UDEF	PERMANENT EROSION CONTROL	1.000	1329800.00000	1329800.00	Y
STRO	STRUCTURES, HURRICANE TRAIL BRIDGE	21723.000	110.00000	2389530.00	Y
STRO	STRUCTURES, EB BRIDGE OVER CSX	8820.000	110.00000	970200.00	Y
STRO	STRUCTURES, WB BRIDGE OVER CSX	8705.000	110.00000	957550.00	Y
STRO	STRUCTURES, WB BRIDGE OVER 7X7 CULVERT	8338.000	110.00000	917180.00	Y
ACTIVE COST GROUP TOTAL				17652660.00	
INFLATED COST GROUP TOTAL				17652660.00	

ITEMS FOR JOB 013895

LINE	ITEM	ALT	UNITS	DESCRIPTION	QUANTITY	PRICE	AMOUNT
0010	153-1300		EA	FIELD ENGINEERS OFFICE TP 3	1.000	86772.91	86772.92
0014	156-0100		LS	GPS DATA COLLECTION & SUBMITTAL	1.000	21288.71	21288.71
0015	210-0100		LS	GRADING COMPLETE - 0013895	1.000	5000000.00	5000000.00
0020	310-1101		TN	GR AGGR BASE CRS, INCL MATL	83000.000	23.52	1952868.82
0025	400-3206		TN	ASPH CONC 12.5 MM OGFC,GP 2,INCL PMBM&HL	1300.000	139.68	181585.55
0030	402-3121		TN	RECYL AC 25MM SP,GP1/2,BM&HL	21700.000	77.39	1679545.71
0035	402-3130		TN	RECYL AC 12.5MM SP,GP2,BM&HL	2300.000	96.46	221875.34
0040	402-3190		TN	RECYL AC 19 MM SP,GP 1 OR 2 ,INC BM&HL	19200.000	74.16	1424021.38
0045	402-3600		TN	RECY AC 12.5,SMA,GP2 ON,INCLP-,BM&HL	2300.000	143.52	330105.02
0050	413-0750		GL	TACK COAT	13500.000	2.40	32422.01
0054	430-0200		SY	PLN PC CONC PVMT/CL1C/ 10 TK	16500.000	60.00	990000.00
0055	430-0220		SY	PLN PC CONC PVMT/CL1C/ 12 TK	61600.000	64.75	3988600.00
0060	433-1000		SY	REINF CONC APPROACH SLAB	390.000	206.00	80343.83
0061	433-1100		SY	REF CONC APPR SL/INCL CURB	360.000	222.34	80042.40
0062	433-1300		SY	REF CONC APPR SL/INCL BARRIER	830.000	275.00	228250.00
0064	441-0018		SY	DRIVEWAY CONCRETE, 8 IN TK	2000.000	60.80	121619.24
0065	441-0104		SY	CONC SIDEWALK, 4 IN	2200.000	46.12	101466.16
0070	441-0754		SY	CONC MEDIAN, 7 1/2 IN	720.000	64.90	46730.39
0075	441-6222		LF	CONC CURB & GUTTER/ 8X30TP2	10300.000	18.74	193102.75
0077	456-2012		GLM	INTENT. RUMB. STRIPS - GRND-IN-PL (CONT)	6.000	1468.61	8811.67
0078	456-2015		GLM	INDENT. RUMB. STRIPS - GRND-IN-PL (SKIP)	1.000	4644.06	4644.07

STATE HIGHWAY AGENCY

DATE : 11/06/2019
PAGE : 2

JOB ESTIMATE REPORT

0079	620-0100	LF	TEMP BARRIER, METHOD NO. 1	8600.000	20.93	180041.69
0080	621-4086	LF	CONCRETE SIDE BARRIER, TP 7WS	700.000	86.44	60513.53
0085	621-6001	LF	CONC BARRIER, TP S-1	450.000	341.93	153868.50
0086	621-6210	LF	CONC SIDE BARRIER, TP 6-S	500.000	489.83	244915.00
0090	627-1020	SF	MSE WALL FACE, 20 - 30 FT HT, WALL NO - 2 (HURRICANE TRAIL)	8400.000	53.48	449278.96
0095	627-1030	SF	MSE WALL FACE, GTR 30 FT HT, WALL NO - 5 (SR 316 EB)	4260.000	58.27	248248.26
0096	627-1030	SF	MSE WALL FACE, GTR 30 FT HT, WALL NO - 6 (SR 316 EB)	4260.000	58.27	248248.26
0100	627-1030	SF	MSE WALL FACE, GTR 30 FT HT, WALL NO - 1 (SR 316 WB)	19080.000	50.06	955319.00
0101	627-1030	SF	MSE WALL FACE, GTR 30 FT HT, WALL NO - 4 (SR 316 WB)	4050.000	58.57	237221.34
0102	627-1030	SF	MSE WALL FACE, GTR 30 FT HT, WALL NO - 7 (SR 316 WB)	4170.000	58.40	243529.33
0105	627-1100	LF	COPING A, WALL NO - SR316	900.000	82.42	74180.62
0109	627-1120	LF	COPING B, WALL NO - HURRICANE TRAIL	340.000	304.33	103473.03
0110	627-1160	LF	TRAFFIC BARRIER H, WALL NO - SR 316	310.000	265.10	82181.19
0115	627-1180	CY	ADDITIONAL MSE BACKFILL	120.000	60.22	7227.05
0118	632-0003	EA	CHANGEABLE MESS SIGN,PORT,TP 3	5.000	8862.46	44312.31
0119	634-1200	EA	RIGHT OF WAY MARKERS	40.000	141.62	5665.13
0120	641-1100	LF	GUARDRAIL, TP T	450.000	64.96	29233.48
0125	641-1200	LF	GUARDRAIL, TP W	9000.000	21.45	193079.25
0130	641-5001	EA	GUARDRAIL ANCHORAGE, TP 1	7.000	1273.03	8911.21
0135	641-5015	EACH	GUARDRL ANCHOR, TP 12A, 31 IN, TANG, E/A	12.000	3140.93	37691.24
0138	643-0010	LF	FIELD FENCE WOVEN WIRE	7600.000	5.55	42210.93
0139	643-1152	LF	CH LK FEN,ZC COAT, 6', 9 GA	1200.000	23.98	28786.87
0140	648-1350	EA	IMPACT ATT UNIT, TP-P- 3-U-30	1.000	27551.09	27551.10
0145	540-1102	LS	REM OF EX BR, BR NO - EB - 9358 SF	1.000	421110.00	421110.00
0150	540-1102	LS	REM OF EX BR, BR NO - WB - 9838 SF	1.000	442710.00	442710.00
0155	150-1000	LS	TRAFFIC CONTROL - 0013895	1.000	5319200.00	5319200.00
0160	150-5010	EA	TRAF CTRL,PORTABLE IMPACT ATTN	2.000	8838.36	17676.73

ITEM TOTAL 26680479.96
INFLATED ITEM TOTAL 26680479.96

TOTALS FOR JOB 013895

ESTIMATED COST:	44333139.98
CONTINGENCY PERCENT (0.0):	0.00
ESTIMATED TOTAL:	44333139.98

GEORGIA DEPARTMENT OF TRANSPORTATION
PRELIMINARY ROW COST ESTIMATE SUMMARY

Date: 3/18/2019 Project: Winder Highwat @ S.R. 316
Revised: 1/10/2018 County: Gwinnett
PI: 0013895
Description: Winder Highway at S.R. 316 Interchange
Project Termini: Winder Highway @ S.R. 316

Existing ROW: Varies
Parcels: 9 Required ROW: Varies

Land and Improvements		$5,780,170.80
Proximity Damage	*$0.00*	
Consequential Damage	*$1,655,400.00*	
Cost to Cures	*$25,000.00*	
Trade Fixtures	*$8,000.00*	
Improvements	*$22,500.00*	
Valuation Services		$60,000.00
Legal Services		$81,075.00
Relocation		$27,000.00
Demolition		$26,500.00
Administrative		$80,500.00
TOTAL ESTIMATED COSTS		$6,055,245.80
TOTAL ESTIMATED COSTS (ROUNDED)		***$6,056,000.00***

Prepared By: Robert C. Wade Robert C Wade 3/18/2019
Print Name Signature Date

Cost Estimation Supervisor : _____
Print Name Signature Date

NOTE: Superviser is only attesting that the estimate was completed using the correct information provided for the the project. The Supervisor is not attesting to property values or the accuracy of the market value estimations provided in this report. No Market Appreciation is included in this Preliminary Cost Estimate.

Comments:

allsop

GDOT
Georgia Department of Transportation

Interoffice Memo

FILE

Project No: **n/a**
County **Gwinnett**
P.I.# **0013895**

Office: **GAINESVILLE**
Date: **April 24, 2019**

Description: ***SR 316 FROM CR 1996/HURRICANE TRAIL TO CR 5661/FENCE ROAD***

FROM J. Lynn Palmer, District Utilities Supervisor

TO Brian Lott, Project Manager

SUBJECT **PRELIMINARY UTILITY COST ESTIMATE - CORRECTED**

A review of utilities located on the above referenced project has been conducted with Concept Layout plans. Listed below is a breakdown of the anticipated reimbursable and non-reimbursable cost.

Utility Owner		Reimbursable	Non-Reimbursable	Estimate Based on
Jackson EMC		$250,000.00	$990,000.00	Site Visit / Available Drawings
Bellsouth (AT&T) - Local		$135,000.00	$316,800.00	Site Visit / Available Drawings
City of Lawrenceville Gas	**	$0.00	$134,700.00	Site Visit / Available Drawings
Colonial Pipeline Co		$0.00	$0.00	Site Visit / Available Drawings
Williams-Transco Gas Pipeline		$125,000.00	$0.00	Site Visit / Available Drawings
Gwinnett Co Water	**	$60,000.00	$521,600.00	Site Visit / Available Drawings
Gwinnett Co Sewer	**	$409,000.00	$44,000.00	Site Visit / Available Drawings
Total	100.00%	$979,000.00	$0.00	
Department Responsibility	100.00%	$979,000.00		
Local Sponsor Responsibility	0.00%	$0.00		PFA Dated N/A with N/A

** Indicates Potential Utility Aid Request from Local Gov't

Estimate is based on the best available information at the current stage, unforeseen prior rights information may be provided by the Utility Company at a later date that could cause some non-reimbursable costs to shift to the reimbursable cost column.

If additional information is needed, please contact Lynn Palmer at 770-533-8319.

cc: Patrick Allen, State Utilities Administrator
Yulonda Pride-Foster, State Utilities Preconstruction Manager
Scott Shelton, Designer (Atkins, 678-247-2476, Scott.Shelton2@atkinsglobal.com)
Brandon Kirby, District Preconstruction Engineer
Area 1, Area Manager
File

DEPARTMENT OF TRANSPORTATION
STATE OF GEORGIA

INTERDEPARTMENT CORRESPONDENCE

FILE: PI #0013895, Gwinnett County

OFFICE: State Utilities Office

FROM: Jill Franks for: Patrick Allen, State Utilities Administrator

DATE: June 21, 2019

TO: Kimberly Nesbitt, State Program Delivery Administrator
Attn: David Lott, Project Manager

SUBJECT: PRELIMINARY RAILROAD COST (CONCEPT ESTIMATE)

A review of railroads located within the project limits on the above referenced project has been conducted based on the proposed concept report. Listed below is a breakdown of the estimated railroad costs:

FACILITY OWNER	NON-REIMBURSABLE	REIMBURSABLE
CSX Transportation Inc.		
– P.E. review cost for bridge over railroad	$0.00	$ 55,000.00-GDOT
– Const. inspection cost for bridge over railroad	$0.00	$ 200,000.00-GDOT
– Excess Soil in CSX property – Landfill fee	$0.00	$ 200,000.00-GDOT
Total Reimbursement Cost:	**$0.00**	**$ 455,000.00**

Total railroad surface work and warning device reimbursable cost for the above project is estimated to be:

$455,000.00

Please note that this amount does not include other reimbursable utility costs that may be associated with this project. This project is GDOT funded.

If you have any questions, please contact Jill Franks, (404) 631-1370, jfranks@dot.ga.gov or Marcela Coll, (404) 631-1372 mcoll@dot.ga.gov.

PA:JLF:mgc

cc: Yulonda Pride-Foster, Utilities Preconstruction Manager
Angela Robinson, State Financial Management Administrator
Vacant, District 1 Utilities Manager
Kevin Cowan, Utilities Railroad Crossing Manager

Georgia Department of Transportation

Interoffice Memo

FILE

PI NUMBER	0013896	PROJECT DESCRIPTION	SR 316 at CR 5661 Fence Road and New Location from Fence Road to SR 8 (includes closure of the existing Fence Road intersection with SR 316 and bridge over existing CSX Railroad)
OFFICE	Program Delivery		
DATE	Friday, November 15, 2019		

From: Kimberly Nesbitt, State Program Delivery Administrator

To: Erik Rohde, P.E., State Project Review Engineer
via email Mailbox: CostEstimatesandUpdates@dot.ga.gov

Subject: **REVISIONS TO PROGRAMMED COSTS**

Project Manager:	Chad White
Management Let Date:	10/15/2022
Managment Right of Way Date:	1/15/2021

Summary of Programmed Costs and Proposed Revised Costs:

Estimate Type	Programmed Costs (T-Pro Without Inflation)	Last Estimate Date	Revised Cost Estimate
CONSTRUCTION	$5,000,000.00	11/05/2019	$5,845,708.83
RIGHT OF WAY	$3,000,000.00	03/18/2019	$891,000.00
UTILITIES	$400,000.00	06/21/2019	$733,500.00

Explanation for Cost Increase and Contingency Justification:

Cost increase letter included as attachment.

Attachments:

Cost Increase Letter
QC/QA Certification Letter
Detailed Cost Estimate Printout
Reimbursable Utilities Cost Estimate
ROW Cost Estimate
Cost Estimate Worksheet

Interoffice Memo

Design Phase Leader Validation of Final QC/QA for Construction Cost Estimate Used In This Revision to Programmed Costs:

Consultant Company or GDOT Design Office:	Atkins

Printed Name:	Scott Shelton

Title:	Project Manager

Signature:	

Date:	11/15/2019

Georgia Department of Transportation

Interoffice Memo

Cost Estimate Worksheet:

CONSTRUCTION COST ESTIMATE (Required base estimate entered from CES and should not include E&I). →	**A**	$ 5,026,764.76
ENGINEERING AND INSPECTION (The default E&I percentage is 5.0%, but may be adjusted per project scope.) →	**D**	$ 251,338.24

Construction Cost	E&I Percentage	E&I Cost
B	C	D = B x C
$ 5,026,764.76	5%	$ 251,338.24

CONTINGENCY (Refer to the Risk and Contingencies Table included in GDOT Policy 3A-9 Cost Estimating Purpose) →	**I**	$ 527,810.30

Construction Cost	E&I Cost	Construction + E&I	Contingency Percentage	Contingency Cost
E	F	G = E + F	H	I = G x H
$ 5,026,764.76	$ 251,338.24	$ 5,278,103.00	10%	$ 527,810.30

ASPHALT FUEL PRICE ADJUSTMENT (Leave blank if not applicable) →	**Q**	$ 39,795.54

Date	Nov 2019
Regular Unleaded	$2.432/ GAL
Diesel	$2.927/ GAL
Liquid AC	$502.00/ TON

Current Asphalt Fuel Index Prices can be found at the link below:

http://www.dot.ga.gov/PS/Materials/AsphaltFuelIndex

	Description	Tons	Percentage of Asphaltic Concrete	Tons of Asphaltic Concrete	Total Monthly Tonnage of Asphalt Cement (TMT)	Monthly Asphalt Cement Price month project let (APL)	Max. Cap	Monthly Asphalt Cement Price month placed (APM)	Price Adjustment (PA)
Liquid AC					M = Sum of Columns L, T & W				
	Description	J	K	L = J x K		N	O	P = (N x O)+N	Q = [((P - N) / N)] x M x N
	Leveling				132.12 TN	$502.00/ TON	60%	$ 803.20	$ 39,795.54
	9.5 mm SP								
	12.5 OGFC								
	12.5 PEM								
	12.5 mm SP	500.00 TN	5.00%	25.00 TN					
	19 mm SP	660.00 TN	5.00%	33.00 TN					
	25 mm SP	1400.00 TN	5.00%	70.00 TN					
Bituminous Tack Coat		Tack Coat	GL/TN	Tons					
	Description	R	S	T = R/S					
	Tack Coat	960.00 GL	232.8234 GL/TN	4.12 TN					
Bituminous Tack Coat (Surface Treatment)		SY	GL/SY	TN					
	Description	U	V	W = (U x V) / (232.8234 GL/TN)					
	Single Surface Treatment		0.20 Gl/SY						
	Double Surface Treatment		0.44 Gl/SY						
	Triple Surface Treatment		0.71 Gl/SY						

CONSTRUCTION TOTAL COST →	**X = A+D+I+Q**	$ 5,845,708.83
RIGHT OF WAY COST →	**Y**	$ 891,000.00
UTILITIES COST (Provided by Utility Office) →	**Z = Sum of Reimbursable Costs**	$ 733,500.00

Utility Owner	Reimbursable Cost	Utility Owner	Reimbursable Cost
Jackson EMC	$ 60,000.00		
Bellsouth (AT&T) - Local	$ -		
City of Lawrenceville Gas	$ -		
Colonial Pipeline Co	$ -		
Williams-Transco Gas Pipeline	$ -		
Gwinnett Co Water	$ 138,700.00		
Gwinnett Co Sewer	$ 268,500.00		
CSX Transportation Inc.	$ 266,300.00		

Atkins North America, Inc.
1600 RiverEdge Parkway, NW, Suite 700
Atlanta, Georgia 30328
Telephone: +1.770.933.0280
www.atkinsglobal.com/northamerica

November 15, 2019

Scott Shelton
Project Manager
ATKINS North America, Inc.
1600 RiverEdge Parkway NW, Suite 700
Atlanta, GA 30135

SUBJECT: Description of Cost Increase for PI No. 0013896 SR 316 at CR 5661/Fence Road and New Location from Fence Road to SR 8, located in Gwinnett County, Georgia

Dear Mr. White:

The intent of this letter is to provide justification to the increased construction cost shown in the current concept report compared to what's shown in GDOT's programmed cost database. The current construction programed estimate is $5,000,000. As part of our conceptual design layout for grade separation, estimated quantities with associated costs were put into GDOT's Cost Estimating System (CES) using the most recent construction bid item costs. As a result, the estimated construction cost increased to $5,845,708.83. This cost is consistent with other grade separated projects in the state.

Sincerely,

ATKINS North America, Inc.

Scott Shelton
Project Manager

STATE HIGHWAY AGENCY

DATE : 11/05/2019
PAGE : 1

JOB ESTIMATE REPORT

JOB NUMBER : 0013896 SPEC YEAR: 13
DESCRIPTION: SR 316 FROM CEDARS RD TO SUGARLOAF PKWY
NEW LOCATION FROM FENCE ROAD TO WINDER HWY

COST GROUPS FOR JOB 0013896

COST GROUP	DESCRIPTION	QUANTITY	PRICE	AMOUNT	ACTIVE?
UDEF	SIGNS AND MARKING	1.000	186200.00000	186200.00	Y
UDEF	DRAINAGE	1.000	186200.00000	186200.00	Y
UDEF	TEMPORARY EROSION CONTROL	1.000	372400.00000	372400.00	Y
UDEF	PERMANENT EROSION CONTROL	1.000	186200.00000	186200.00	Y
STRO	STRUCTURES, FENCE RD CONNECTOR	9454.000	200.00000	1890800.00	Y
ACTIVE COST GROUP TOTAL				2821800.00	
INFLATED COST GROUP TOTAL				2821800.00	

ITEMS FOR JOB 0013896

LINE	ITEM	ALT	UNITS	DESCRIPTION	QUANTITY	PRICE	AMOUNT
0005	150-1000		LS	TRAFFIC CONTROL - 0013896	1.000	372400.00	372400.00
0010	210-0100		LS	GRADING COMPLETE - 0013896	1.000	500000.00	500000.00
0015	310-1101		TN	GR AGGR BASE CRS, INCL MATL	5100.000	30.48	155488.39
0020	402-3121		TN	RECYL AC 25MM SP,GP1/2,BM&HL	1400.000	101.46	142051.91
0025	402-3130		TN	RECYL AC 12.5MM SP,GP2,BM&HL	500.000	111.96	55983.91
0030	402-3190		TN	RECYL AC 19 MM SP,GP 1 OR 2 ,INC BM&HL	660.000	107.02	70639.56
0035	413-0750		GL	TACK COAT	960.000	4.11	3949.46
0040	433-1100		SY	REF CONC APPR SL/INCL CURB	460.000	222.34	102276.40
0044	441-0018		SY	DRIVEWAY CONCRETE, 8 IN TK	3100.000	60.05	186184.26
0045	441-6222		LF	CONC CURB & GUTTER/ 8X30TP2	2900.000	20.62	59802.58
0050	627-1020		SF	MSE WALL FACE, 20 - 30 FT HT, WALL NO - 12 FENCE ROAD CONNECTOR	4125.000	58.79	242541.42
0051	627-1020		SF	MSE WALL FACE, 20 - 30 FT HT, WALL NO - 13 FENCE ROAD CONNECTOR	3340.000	60.47	201983.39
0055	627-1100		LF	COPING A, WALL NO - FENCE ROAD CONNECTOR	280.000	89.16	24967.17
0056	627-1120		LF	COPING B, WALL NO - FENCE ROAD CONNECTOR	60.000	304.33	18259.95
0060	627-1180		CY	ADDITIONAL MSE BACKFILL	30.000	70.71	2121.54
0063	632-0003		EA	CHANGEABLE MESS SIGN,PORT,TP 3	1.000	8862.46	8862.46
0064	634-1200		EA	RIGHT OF WAY MARKERS	10.000	149.57	1495.71
0065	641-1100		LF	GUARDRAIL, TP T	250.000	69.39	17349.65
0070	641-1200		LF	GUARDRAIL, TP W	625.000	25.11	15695.79
0075	641-5001		EA	GUARDRAIL ANCHORAGE, TP 1	3.000	1291.39	3874.19
0080	641-5015		EACH	GUARDRL ANCHOR, TP 12A, 31 IN, TANG, E/A	2.000	3098.89	6197.78
0085	643-1152		LF	CH LK FEN,ZC COAT, 6', 9 GA	400.000	32.09	12839.24
ITEM TOTAL							2204964.77

STATE HIGHWAY AGENCY

DATE : 11/05/2019
PAGE : 2

JOB ESTIMATE REPORT

INFLATED ITEM TOTAL	2204964.77

TOTALS FOR JOB 0013896

ESTIMATED COST:	5026764.76
CONTINGENCY PERCENT (0.0):	0.00
ESTIMATED TOTAL:	5026764.76

GEORGIA DEPARTMENT OF TRANSPORTATION
PRELIMINARY ROW COST ESTIMATE SUMMARY

Date: 3/18/2019 Project: Winder Highwat @ S.R. 316
Revised: 1/10/2018 County: Gwinnett
PI: 0013896

Description: Winder Highway at S.R. 316 Interchange
Project Termini: Winder Highway @ S.R. 316

Existing ROW: Varies
Parcels: 1 Required ROW: Varies

Land and Improvements		$829,800.00
Proximity Damage	*$0.00*	
Consequential Damage	*$0.00*	
Cost to Cures	*$0.00*	
Trade Fixtures	*$0.00*	
Improvements	*$0.00*	
Valuation Services		$5,000.00
Legal Services		$38,175.00
Relocation		$3,000.00
Demolition		$0.00
Administrative		$14,500.00
TOTAL ESTIMATED COSTS		$890,475.00
TOTAL ESTIMATED COSTS (ROUNDED)		***$891,000.00***

Prepared By: Robert C. Wade 3/18/2019
Print Name Signature Date

Cost Estimation Supervisor :
Print Name Signature Date

NOTE: Superviser is only attesting that the estimate was completed using the correct information provided for the the project. The Supervisor is not attesting to property values or the accuracy of the market value estimations provided in this report. No Market Appreciation is included in this Preliminary Cost Estimate.

Comments:

allsop

Georgia Department of Transportation

Interoffice Memo

FILE

Project No: **n/a**
County **Gwinnett**
P.I.# **0013896**

Office: **GAINESVILLE**
Date: **April 16, 2019**

Description: ***SR 316 @ CR 5661/FENCE RD & NEW LOC FROM FENCE RD TO SR 8***

FROM J. Lynn Palmer, District Utilities Supervisor

TO Anthony Tate, Project Manager

SUBJECT **PRELIMINARY UTILITY COST ESTIMATE**

A review of utilities located on the above referenced project has been conducted with Concept Layout plans. Listed below is a breakdown of the anticipated reimbursable and non-reimbursable cost.

Utility Owner		Reimbursable	Non-Reimbursable	Estimate Based on
Jackson EMC		$60,000.00	$240,000.00	Site Visit / Available Drawings
Bellsouth (AT&T) - Local		$0.00	$32,400.00	Site Visit / Available Drawings
City of Lawrenceville Gas	**	$0.00	$0.00	Site Visit / Available Drawings
Colonial Pipeline Co		$0.00	$0.00	Site Visit / Available Drawings
Williams-Transco Gas Pipeline		$0.00	$0.00	Site Visit / Available Drawings
Gwinnett Co Water	**	$138,700.00	$0.00	Site Visit / Available Drawings
Gwinnett Co Sewer	**	$268,500.00	$0.00	Site Visit / Available Drawings
Total	100.00%	$467,200.00	$0.00	
Department Responsibility	100.00%	$467,200.00		
Local Sponsor Responsibility	0.00%	$0.00		PFA Dated N/A with N/A

** Indicates Potential Utility Aid Request from Local Gov't

Estimate is based on the best available information at the current stage, unforeseen prior rights information may be provided by the Utility Company at a later date that could cause some non-reimbursable costs to shift to the reimbursable cost column.

If additional information is needed, please contact Lynn Palmer at 770-533-8319.

cc: Patrick Allen, State Utilities Administrator
Yulonda Pride-Foster, State Utilities Preconstruction Manager
Scott Shelton, Designer (Atkins, 678-247-2476, Scott.Shelton2@atkinsglobal.com)
Brandon Kirby, District Preconstruction Engineer
Area 1, Area Manager
File

DEPARTMENT OF TRANSPORTATION
STATE OF GEORGIA

INTERDEPARTMENT CORRESPONDENCE

FILE: PI #0013896, Gwinnett County

OFFICE: State Utilities Office

FROM: Jill Franks for: Patrick Allen, State Utilities Administrator

DATE: June 21, 2019

TO: Kimberly Nesbitt, State Program Delivery Administrator
Attn: Bryan Lott, Project Manager

SUBJECT: PRELIMINARY RAILROAD COST (CONCEPT ESTIMATE)

A review of railroads located within the project limits on the above referenced project has been conducted based on the proposed concept report. Listed below is a breakdown of the estimated railroad costs:

FACILITY OWNER	NON-REIMBURSABLE	REIMBURSABLE
CSX Transportation Inc.		
– P.E. review cost for bridge over railroad	$0.00	$ 38,600.00-GDOT
– Const. inspection cost for bridge over railroad	$0.00	$ 127,700.00-GDOT
– Excess Soil in CSX property – Landfill fee	$0.00	$ 100,000.00-GDOT
Total Reimbursement Cost:	**$0.00**	**$ 266,300.00**

Total railroad surface work and warning device reimbursable cost for the above project is estimated to be:

$266,300.00

Please note that this amount does not include other reimbursable utility costs that may be associated with this project. This project is GDOT funded.

If you have any questions, please contact Jill Franks, (404) 631-1370, jfranks@dot.ga.gov or Marcela Coll, (404) 631-1372 mcoll@dot.ga.gov.

PA:JLF:mgc

cc: Yulonda Pride-Foster, Utilities Preconstruction Manager
Angela Robinson, State Financial Management Administrator
Vacant, District 1 Utilities Manager
Kevin Cowan, Utilities Railroad Crossing Manager

Georgia Department of Transportation

Interoffice Memo

FILE

PI NUMBER	0013897	PROJECT DESCRIPTION	SR 316 at SR 8/US 29 (includes interchange at SR 8/US 29 and bridge over Colonial Pipeline crossing in the EB direction)
OFFICE	Program Delivery		
DATE	Friday, November 15, 2019		

From: Kimberly Nesbitt, State Program Delivery Administrator

To: Erik Rohde, P.E., State Project Review Engineer
via email Mailbox: CostEstimatesandUpdates@dot.ga.gov

Subject: **REVISIONS TO PROGRAMMED COSTS**

Project Manager:	Chad White
Management Let Date:	10/15/2022
Managment Right of Way Date:	1/15/2021

Summary of Programmed Costs and Proposed Revised Costs:

Estimate Type	Programmed Costs (T-Pro Without Inflation)	Last Estimate Date	Revised Cost Estimate
CONSTRUCTION	$47,000,000.00	11/05/2019	$49,021,383.28
RIGHT OF WAY	$18,000,000.00	03/18/2019	$11,429,000.00
UTILITIES	$4,000,000.00	04/24/2019	$1,599,200.00

Explanation for Cost Increase and Contingency Justification:

Cost increase letter included as attachment.

Attachments:

Cost Increase Letter
QC/QA Certification Letter
Detailed Cost Estimate Printout
Reimbursable Utilities Cost Estimate
ROW Cost Estimate
Cost Estimate Worksheet

Interoffice Memo

Design Phase Leader Validation of Final QC/QA for Construction Cost Estimate Used In This Revision to Programmed Costs:

Consultant Company or GDOT Design Office:	Atkins

Printed Name:	Scott Shelton

Title:	Project Manager

Signature:	

Date:	11/15/2019

Georgia Department of Transportation

Interoffice Memo

Cost Estimate Worksheet:

CONSTRUCTION COST ESTIMATE (Required base estimate entered from CES and should not include E&I). →	**A**	$ 41,756,972.48
ENGINEERING AND INSPECTION (The default E&I percentage is 5.0%, but may be adjusted per project scope.) →	**D**	$ 2,087,848.62

Construction Cost	E&I Percentage	E&I Cost
B	C	D = B x C
$ 41,756,972.48	5%	$ 2,087,848.62

CONTINGENCY (Refer to the Risk and Contingencies Table included in GDOT Policy 3A-9 Cost Estimating Purpose) →	**I**	$ 4,384,482.11

Construction Cost	E&I Cost	Construction + E&I	Contingency Percentage	Contingency Cost
E	F	G = E + F	H	I = G x H
$ 41,756,972.48	$ 2,087,848.62	$ 43,844,821.10	10%	$ 4,384,482.11

ASPHALT FUEL PRICE ADJUSTMENT (Leave blank if not applicable) →	**Q**	$ 792,080.07

Date	Nov 2019
Regular Unleaded	$2.432/ GAL
Diesel	$2.927/ GAL
Liquid AC	$502.00/ TON

Current Asphalt Fuel Index Prices can be found at the link below:

http://www.dot.ga.gov/PS/Materials/AsphaltFuelIndex

	Description	Tons	Percentage of Asphaltic Concrete	Tons of Asphaltic Concrete	Total Monthly Tonnage of Asphalt Cement (TMT)	Monthly Asphalt Cement Price month project let (APL)	Max. Cap	Monthly Asphalt Cement Price month placed (APM)	Price Adjustment (PA)
Liquid AC					M = Sum of Columns L, T & W				Q = [((P - N) / N)] x M x N
	Description	J	K	L = J x K		N	O	P = (N x O)+N	
	Leveling				2629.75 TN	$502.00/ TON	60%	$ 803.20	$ 792,080.07
	9.5 mm SP								
	12.5 OGFC	1080.00 TN	5.00%	54.00 TN					
	12.5 PEM								
	12.5 mm SP	4900.00 TN	5.00%	245.00 TN					
	19 mm SP	16000.00 TN	5.00%	800.00 TN					
	25 mm SP	29000.00 TN	5.00%	1450.00 TN					
Bituminous Tack Coat		Tack Coat	GL/TN	Tons					
	Description	R	S	T = R/S					
	Tack Coat	18800.00 GL	232.8234 GL/TN	80.75 TN					
Bituminous Tack Coat (Surface Treatment)		SY	GL/SY	TN					
	Description	U	V	W = (U x V) / (232.8234 GL/TN)					
	Single Surface Treatment		0.20 Gl/SY						
	Double Surface Treatment		0.44 Gl/SY						
	Triple Surface Treatment		0.71 Gl/SY						

CONSTRUCTION TOTAL COST →	**X = A+D+I+Q**	$ 49,021,383.28
RIGHT OF WAY COST →	**Y**	$ 11,429,000.00
UTILITIES COST (Provided by Utility Office) →	**Z = Sum of Reimbursable Costs**	$ 1,599,200.00

Utility Owner	Reimbursable Cost	Utility Owner	Reimbursable Cost
Georgia Power Co - Distribution	$ 870,000.00		
Bellsouth (AT&T) - Local	$ 403,200.00		
City of Lawrenceville Gas	$ -		
Colonial Pipeline Co	$ 250,000.00		
Williams-Transco Gas Pipeline	$ -		
Gwinnett Co Water	$ 76,000.00		
Gwinnett Co Sewer	$ -		
Comcast CATV	$ -		

Atkins North America, Inc.
1600 RiverEdge Parkway, NW, Suite 700
Atlanta, Georgia 30328
Telephone: +1.770.933.0280
www.atkinsglobal.com/northamerica

November 15, 2019

Scott Shelton
Project Manager
ATKINS North America, Inc.
1600 RiverEdge Parkway NW, Suite 700
Atlanta, GA 30135

SUBJECT: Description of Cost Increase for PI No. 0013897 SR 316 at SR 8/US29 (including new interchange on SR 316 at SR 8/US 29 Winder Highway), located in Gwinnett County, Georgia

Dear Mr. White:

The intent of this letter is to provide justification to the increased construction cost shown in the current concept report compared to what's shown in GDOT's programmed cost database. The current construction programed estimate is $47,000,000. As part of our conceptual design layout for grade separation, estimated quantities with associated costs were put into GDOT's Cost Estimating System (CES) using the most recent construction bid item costs. As a result, the estimated construction cost decreased to $49,021,383.28. This cost is consistent with other grade separated projects in the state.

Sincerely,

ATKINS North America, Inc.

Scott Shelton
Project Manager

STATE HIGHWAY AGENCY

DATE : 11/05/2019
PAGE : 1

JOB ESTIMATE REPORT

JOB NUMBER : 0013897 SPEC YEAR: 13
DESCRIPTION: SR 316 FROM CEDARS RD TO SUGARLOAF PKWY
SR 316 CSX RAILROAD TO SUGARLOAF PKWY

COST GROUPS FOR JOB 0013897

COST GROUP	DESCRIPTION	QUANTITY	PRICE	AMOUNT	ACTIVE?
UDEF	SIGNS AND MARKING	1.000	1295600.00000	1295600.00	Y
UDEF	DRAINAGE	1.000	3886600.00000	3886600.00	Y
UDEF	TEMPORARY EROSION CONTROL	1.000	2591100.00000	2591100.00	Y
UDEF	PERMANENT EROSION CONTROL	1.000	1295600.00000	1295600.00	Y
UDEF	ATMS	1.000	1295600.00000	1295600.00	Y
SGNL	TRAFFIC SIGNALS (LS)	2.000	150000.00000	300000.00	Y
STRO	STRUCTURES, WINDER HWY	40156.000	110.00000	4417160.00	Y
STRO	STRUCTURES, EB OVER COLONIAL PIPE	25753.000	175.00000	4506775.00	Y
ACTIVE COST GROUP TOTAL				19588435.00	
INFLATED COST GROUP TOTAL				19588435.00	

ITEMS FOR JOB 0013897

LINE	ITEM	ALT	UNITS	DESCRIPTION	QUANTITY	PRICE	AMOUNT
0005	150-1000		LS	TRAFFIC CONTROL - 0013897	1.000	5182100.00	5182100.00
0010	150-5010		EA	TRAF CTRL,PORTABLE IMPACT ATTN	3.000	8838.36	26515.09
0015	210-0100		LS	GRADING COMPLETE - 0013897	1.000	2500000.00	2500000.00
0020	310-1101		TN	GR AGGR BASE CRS, INCL MATL	74600.000	23.76	1772711.59
0025	400-3206		TN	ASPH CONC 12.5 MM OGFC,GP 2,INCL PMBM&HL	1080.000	141.23	152531.14
0030	402-3121		TN	RECYL AC 25MM SP,GP1/2,BM&HL	29000.000	75.21	2181168.88
0035	402-3130		TN	RECYL AC 12.5MM SP,GP2,BM&HL	2900.000	94.30	273495.20
0040	402-3190		TN	RECYL AC 19 MM SP,GP 1 OR 2 ,INC BM&HL	16000.000	75.57	1209156.00
0045	402-3600		TN	RECY AC 12.5,SMA,GP2 ON,INCLP-,BM&HL	2000.000	145.01	290024.44
0050	413-0750		GL	TACK COAT	18800.000	2.24	42206.38
0054	430-0200		SY	PLN PC CONC PVMT/CL1C/ 10 TK	18000.000	60.00	1080000.00
0055	430-0220		SY	PLN PC CONC PVMT/CL1C/ 12 TK	29000.000	64.75	1877750.00
0060	433-1100		SY	REF CONC APPR SL/INCL CURB	360.000	222.34	80042.40
0061	433-1300		SY	REF CONC APPR SL/INCL BARRIER	1130.000	275.00	310750.00
0065	441-0104		SY	CONC SIDEWALK, 4 IN	3000.000	45.25	135762.09
0070	441-0754		SY	CONC MEDIAN, 7 1/2 IN	4500.000	59.31	266898.42
0075	441-6222		LF	CONC CURB & GUTTER/ 8X30TP2	6400.000	19.43	124355.07
0076	456-2012		GLM	INTENT. RUMB. STRIPS - GRND-IN-PL (CONT)	4.000	1468.61	5874.45
0077	456-2015		GLM	INDENT. RUMB. STRIPS - GRND-IN-PL (SKIP)	2.000	4719.62	9439.26
0078	620-0100		LF	TEMP BARRIER, METHOD NO. 1	7200.000	21.45	154446.26
0079	621-4086		LF	CONCRETE SIDE BARRIER, TP 7WS	350.000	86.44	30256.77
0080	621-6001		LF	CONC BARRIER, TP S-1	1300.000	341.93	444509.00
0085	627-1020		SF	MSE WALL FACE, 20 - 30 FT HT, WALL NO -	14575.000	49.70	724398.78

STATE HIGHWAY AGENCY

DATE : 11/05/2019
PAGE : 2

JOB ESTIMATE REPORT

			8 WINDER HWY			
0086	627-1020	SF	MSE WALL FACE, 20 - 30 FT HT, WALL NO - 9 WINDER HWY	18450.000	48.16	888653.11
0090	627-1020	SF	MSE WALL FACE, 20 - 30 FT HT, WALL NO - 6 SR 316 EB	10700.000	51.78	554147.65
0091	627-1020	SF	MSE WALL FACE, 20 - 30 FT HT, WALL NO - 10 SR 316 EB	3650.000	59.76	218137.07
0092	627-1020	SF	MSE WALL FACE, 20 - 30 FT HT, WALL NO - 11 SR 316 EB	3450.000	60.21	207737.27
0095	627-1020	SF	MSE WALL FACE, 20 - 30 FT HT, WALL NO - 7 SR 316 WB	8200.000	53.65	439991.34
0100	627-1100	LF	COPING A, WALL NO - SR 316	460.000	86.23	39668.31
0105	627-1120	LF	COPING B, WALL NO - WINDER HWY	1100.000	304.33	334765.68
0109	627-1160	LF	TRAFFIC BARRIER H, WALL NO - SR 316	960.000	250.43	240415.44
0110	627-1180	CY	ADDITIONAL MSE BACKFILL	190.000	57.10	10849.57
0113	632-0003	EA	CHANGEABLE MESS SIGN,PORT,TP 3	4.000	8862.46	35449.85
0114	634-1200	EA	RIGHT OF WAY MARKERS	40.000	141.62	5665.13
0115	641-1100	LF	GUARDRAIL, TP T	200.000	71.16	14232.12
0120	641-1200	LF	GUARDRAIL, TP W	6100.000	21.95	133905.55
0125	641-5001	EA	GUARDRAIL ANCHORAGE, TP 1	8.000	1270.15	10161.28
0130	641-5015	EACH	GUARDRL ANCHOR, TP 12A, 31 IN, TANG, E/A	10.000	3140.93	31409.37
0133	643-0010	LF	FIELD FENCE WOVEN WIRE	6000.000	5.84	35075.04
0134	643-1152	LF	CH LK FEN,ZC COAT, 6', 9 GA	1800.000	21.54	38780.28
0135	648-1350	EA	IMPACT ATT UNIT, TP-P- 3-U-30	2.000	27551.09	55102.20

ITEM TOTAL	22168537.46
INFLATED ITEM TOTAL	22168537.46

TOTALS FOR JOB 0013897

ESTIMATED COST:	41756972.48
CONTINGENCY PERCENT (0.0):	0.00
ESTIMATED TOTAL:	41756972.48

GEORGIA DEPARTMENT OF TRANSPORTATION
PRELIMINARY ROW COST ESTIMATE SUMMARY

Date: 3/18/2019 Project: Winder Highwat @ S.R. 316
Revised: 1/10/2018 County: Gwinnett
PI: 0013897

Description: Winder Highway at S.R. 316 Interchange
Project Termini: Winder Highway @ S.R. 316

Existing ROW: Varies
Parcels: 14 Required ROW: Varies

Land and Improvements		$10,887,690.66
Proximity Damage	*$0.00*	
Consequential Damage	*$2,713,500.00*	
Cost to Cures	*$50,000.00*	
Trade Fixtures	*$10,000.00*	
Improvements	*$85,000.00*	
Valuation Services		$103,750.00
Legal Services		$121,950.00
Relocation		$42,000.00
Demolition		$150,000.00
Administrative		$123,000.00
TOTAL ESTIMATED COSTS		$11,428,390.66
TOTAL ESTIMATED COSTS (ROUNDED)		***$11,429,000.00***

Prepared By: Robert C. Wade 3/18/2019
Print Name Signature Date

Cost Estimation Supervisor :
Print Name Signature Date

NOTE: Superviser is only attesting that the estimate was completed using the correct information provided for the the project. The Supervisor is not attesting to property values or the accuracy of the market value estimations provided in this report. No Market Appreciation is included in this Preliminary Cost Estimate.

Comments:

allsop

GDOT
Georgia Department of Transportation

Interoffice Memo

FILE

Project No: **n/a**
County **Gwinnett**
P.I.# **0013897**

Office: **GAINESVILLE**
Date: **April 24, 2019**

Description: ***SR 316 @ SR 8/US 29***

FROM J. Lynn Palmer, District Utilities Supervisor

TO Brian Lott, Project Manager

SUBJECT **PRELIMINARY UTILITY COST ESTIMATE - CORRECTED**

A review of utilities located on the above referenced project has been conducted with Concept Layout plans. Listed below is a breakdown of the anticipated reimbursable and non-reimbursable cost.

Utility Owner		Reimbursable	Non-Reimbursable	Estimate Based on
Georgia Power Co - Distribution		$870,000.00	$0.00	Site Visit / Available Drawings
Bellsouth (AT&T) - Local		$403,200.00	$205,800.00	Site Visit / Available Drawings
City of Lawrenceville Gas	**	$0.00	$42,000.00	Site Visit / Available Drawings
Colonial Pipeline Co		$250,000.00	$0.00	Site Visit / Available Drawings
Williams-Transco Gas Pipeline		$0.00	$0.00	Site Visit / Available Drawings
Gwinnett Co Water	**	$76,000.00	$283,150.00	Site Visit / Available Drawings
Gwinnett Co Sewer	**	$0.00	$0.00	Site Visit / Available Drawings
Comcast CATV		$0.00	$67,200.00	Site Visit / Available Drawings
Total	100.00%	$1,599,200.00	$598,150.00	
Department Responsibility	100.00%	$1,599,200.00		
Local Sponsor Responsibility	0.00%	$0.00		PFA Dated N/A with N/A

** Indicates Potential Utility Aid Request from Local Gov't

Estimate is based on the best available information at the current stage, unforeseen prior rights information may be provided by the Utility Company at a later date that could cause some non-reimbursable costs to shift to the reimbursable cost column.

If additional information is needed, please contact Lynn Palmer at 770-533-8319.

cc: Patrick Allen, State Utilities Administrator
Yulonda Pride-Foster, State Utilities Preconstruction Manager
Scott Shelton, Designer (Atkins, 678-247-2476, Scott.Shelton2@atkinsglobal.com)
Brandon Kirby, District Preconstruction Engineer
Area 1, Area Manager
File

From: Westberry, Lisa <lwestberry@dot.ga.gov>
Sent: Tuesday, July 23, 2019 1:33 PM
To: Shelton, Scott D <Scott.Shelton2@atkinsglobal.com>
Cc: Lott, Bryan <blott@dot.ga.gov>
Subject: PI 0013895-97 SR 316 at US 29 Gwinnett - Estimated Mitigation Costs for Concept Report

Please accept this as my approval on the mitigation costs provided in the attached document.

Thank you,

Lisa Westberry
Special Projects Coordinator

Office of Environmental Services
One Georgia Center, 16th Floor
600 West Peachtree Street, NW
Atlanta, GA, 30308
404.631.1772

From: Shelton, Scott D [mailto:Scott.Shelton2@atkinsglobal.com]
Sent: Monday, July 22, 2019 5:42 PM
To: Westberry, Lisa <lwestberry@dot.ga.gov>
Cc: Lott, Bryan <blott@dot.ga.gov>
Subject: PI 0013895-97 SR 316 at US 29 Gwinnett

CAUTION: This email originated from outside of the organization. Do not click links or open attachments unless you recognize the sender and know the content is safe.

Lisa,

We have a concept report, attached, where we submitted an estimate for mitigation costs. The concept review team requested we confirm the environmental mitigation costs. Would you please review the attached pdf and verify the environmental mitigation costs are correct for the projects.

Thank you,

Scott Shelton *PE*
Senior Project Manager
Transportation

678.247.2476 678.643.3772

Atkins, member of the SNC-Lavalin Group
1600 Riveredge Parkway, Suite 700 Atlanta, GA 30328

Estimated Environmental Mitigation Costs
PI No.s 0013895, 0013896, 0013897
Gwinnett County

Preferred Alternative

13895

Jurisdictional Stream Impacts		
Stream Name	**Length of Impacts**	**Credits**
IS 1	0 LF	30,252.00 (Grandfathered)
IS 2	0 LF	
IS 4	300 LF	
IS 5	175 LF	
PS 6	919 LF	
PS 7	921 LF	
IS 8	190 LF	
PS 9	16 LF	

Total	2521 LF	30252.00 (Grandfathered)

Stream Credits	$28.00/credit

Estimated Stream Mitigation Costs	**$847,056.00**

Jurisdictional Wetland Impacts	
Wetland Name	**Area**
WL 3	0.000 Acres
WL 10	0.000 Acres
WL 11	0.020 Acres

Total	0.020 Acres

Credits	0.16 (Grandfathered)
Wetland Credits	$49,500.00/credit

Estimated Wetland Mitigation Costs	**$7,920.00**

13896

Jurisdictional Wetland Impacts	
Wetland Name	**Area**
WL 16	0.000 Acres

Total	0.000 Acres

Credits	0.00 (Grandfathered)	
	Wetland Credits	$49,500.00/credit

Estimated Wetland Mitigation Costs	**$0.00**

13897

Jurisdictional Stream Impacts		
Stream Name	**Length of Impacts**	**Credits**
IS 12	0 LF	22776.00 (Grandfathered)
PS 13	0 LF	
IS 15	350 LF	
IS 17	0 LF	
PS 18	112 LF	
IS 20	0 LF	
IS 21	0 LF	
PS 24	495 LF	
PS 25	181 LF	
IS 26	251 LF	
PS 27	225 LF	
PS 28	251 LF	
PS 29	0 LF	
IS 30	33 LF	
PS 31	0 LF	
PS 32	0 LF	

Total	1898 LF	22776.00 (Grandfathered)

Stream Credits	$28.00/credit

Estimated Stream Mitigation Costs	**$637,728.00**

Jurisdictional Wetland Impacts	
Wetland Name	**Area**
WL 14	0.000 Acres
WL 19	0.002 Acres
WL 22	0.000 Acres
WL 23	0.000 Acres

Total	0.002 Acres ~ 0.01 Acres

Credits	0.08 (Grandfathered)	
	Wetland Credits	$49,500.00/credit

Estimated Wetland Mitigation Costs	**$3,960.00**

Total Estimated Mitigation Costs	**$1,496,664.00**

*Calculations based on 2018 USACE SOP and Estimated Costs for Mitigation Credits (from GDOT August 2019). Grandfathered credits would apply to this project, which was used to calculate dollar amount.

Attachment 5

Concept Utility Report

Original Version: May 24, 2013
Revision: Feb. April 5, 2018

Concept Utility Report

Project Number: N/A

District: One

County: Gwinnett

Prepared by: Doris Abernathy

P.I. # 0013895

Date: April 17, 2019

Project Description: SR 316 at US 29 Hurricane Trail Interchanges

The information provided herein has been gathered from Georgia811and/or field visits and serves as an estimate. Nothing contained in this report is to be used as a substitute for 1st Submission or SUE.

Are SUE services recommended? Choose an item.

Level: ☐A ☒B ☐C ☐D

Public Interest Determination (PID):

☐Automatic ☐Mandatory ☐Consideration ☒No Use ☐Exempt

Is a separate utility funding phase recommended? No

Potential Project (Schedule/Budget) Impacts: N/A

Capital Improvement Projects (Utilities) Anticipated in the Area: None anticipated

Project Specific Recommendations for Avoidance/Mitigation: N/A

Right of Way Coordination: If permanent easements are negotiated include Utility Clause.

Environmental Coordination: N/A

Additional Remarks: Click here to enter text.

Original Version: May 24, 2013
Revision: Feb. March 8, 2018

Utilities have facilities within the project limits.

Utilities have been identified using Georgia811 and/or field visits.

Facility Owner	**Facility Owner Contact Email Address**	**Existing Facilities/ Appurtenances**	**General Description of Location**	**Facilities to Avoid** *approx. limits*	**Facilities Retention Recommended** *approx. limits*	**Comments**
ATT/D Telecom	Clay Johnson cj3079@att.com	Aerial	N/A	N/A	N/A	N/A
Jackson EMC	Michael D. Brown mbrown @jacksonemc.com	Electricity - Distribution	N/A	N/A	N/A	N/A
City of Lawrenceville	Barry Mock Barry.Mock@ LawrencevilleGa.org	Natural Gas	N/A	N/A	N/A	N/A
Williams-Transco Gas Pipeline	Rick Ryder rick.ryder@ williams.com	Natural Gas	N/A	N/A	N/A	N/A
Gwinnett Co Water & Sewer	Russell Maddox Russell.Maddox@ gwinnettcounty.com	Water/Sewer	N/A	N/A	N/A	N/A
Click here to enter text.	Click here to enter text.	Click here to enter text.	Click here to enter text.	Click here to enter text.	Click here to enter text.	

Note: *To add additional rows, click the bottom right corner of the box above, then click the blue* + *that will appear. Please add additional rows prior to entering text.*

Original Version: May 24, 2013
Revision: Feb. April 5, 2018

Concept Utility Report

Project Number: N/A

District: One

County: Gwinnett

Prepared by: Doris Abernathy

P.I. # 0013896

Date: April 17, 2019

Project Description: SR 316 @ CR 5661/Fence Rd and New Location from Fence Rd to SR 8

The information provided herein has been gathered from Georgia811and/or field visits and serves as an estimate. Nothing contained in this report is to be used as a substitute for 1st Submission or SUE.

Are SUE services recommended? Choose an item.

Level: ☐A ☒B ☐C ☐D

Public Interest Determination (PID):

☐Automatic ☐Mandatory ☐Consideration ☒No Use ☐Exempt

Is a separate utility funding phase recommended? No

Potential Project (Schedule/Budget) Impacts: N/A

Capital Improvement Projects (Utilities) Anticipated in the Area: None anticipated

Project Specific Recommendations for Avoidance/Mitigation: N/A

Right of Way Coordination: If permanent easements are negotiated include Utility Clause.

Environmental Coordination: N/A

Additional Remarks: Click here to enter text.

Original Version: May 24, 2013
Revision: Feb. March 8, 2018

Utilities have facilities within the project limits.

Utilities have been identified using Georgia811 and/or field visits.

Facility Owner	**Facility Owner Contact Email Address**	**Existing Facilities/ Appurtenances**	**General Description of Location**	**Facilities to Avoid** *approx. limits*	**Facilities Retention Recommended** *approx. limits*	**Comments**
ATT/D Telecom	Clay Johnson cj3079@att.com	Aerial	N/A	N/A	N/A	N/A
Jackson EMC	Michael D. Brown mbrown @jacksonemc.com	Electricity - Distribution	N/A	N/A	N/A	N/A
City of Lawrenceville	Barry Mock Barry.Mock@ LawrencevilleGa.org	Natural Gas	N/A	N/A	N/A	N/A
Williams-Transco Gas Pipeline	Rick Ryder rick.ryder@ williams.com	Natural Gas	N/A	N/A	N/A	N/A
Gwinnett Co Water & Sewer	Russell Maddox Russell.Maddox@ gwinnettcounty.com	Water/Sewer	N/A	N/A	N/A	N/A
Click here to enter text.	Click here to enter text.	Click here to enter text.	Click here to enter text.	Click here to enter text.	Click here to enter text.	

Note: *To add additional rows, click the bottom right corner of the box above, then click the blue* + *that will appear. Please add additional rows prior to entering text.*

Original Version: May 24, 2013
Revision: April 5, 2018

Concept Utility Report

Project Number: N/A

District: One

County: Gwinnett

Prepared by: Doris Abernathy

P.I. # 0013897

Date: November 7, 2019

Project Description: SR 316 @ SR 8/US 29

The information provided herein has been gathered from Georgia811and/or field visits and serves as an estimate. Nothing contained in this report is to be used as a substitute for 1st Submission or SUE.

Are SUE services recommended? Choose an item.

Level: ☐A ☒B ☐C ☐D

Public Interest Determination (PID):

☐Automatic ☐Mandatory ☐Consideration ☒No Use ☐Exempt

Is a separate utility funding phase recommended? No

Potential Project (Schedule/Budget) Impacts: N/A

Capital Improvement Projects (Utilities) Anticipated in the Area: None anticipated

Project Specific Recommendations for Avoidance/Mitigation: N/A

Right of Way Coordination: If permanent easements are negotiated include Utility Clause.

Environmental Coordination: N/A

Additional Remarks: Click here to enter text.

Original Version: May 24, 2013
Revision: April 5, 2018

Utilities have facilities within the project limits.

Utilities have been identified using Georgia811 and/or field visits.

Facility Owner	**Facility Owner Contact Email Address**	**Existing Facilities/ Appurtenanc**	**General Description of Location**	**Facilities to Avoid** *approx. limits*	**Facilities Retention Recommended** *approx. limits*	**Comments**
ATT/D Telecom	Clay Johnson cj3079@att.com	Telecom	N/A	N/A	N/A	N/A
Georgia Power Co-Distribution	Galen Davis GDAVIS@ southernco.com	Electricity	N/A	N/A	N/A	N/A
Colonial Pipeline Co	Kevin Raley kraley@colpipe.com	Natural Gas	N/A	N/A	N/A	N/A
City of Lawrenceville	Barry Mock Barry.Mock@ LawrencevilleGa.org	Natural Gas	N/A	N/A	N/A	N/A
Williams-Transco Gas Pipeline	Rick Ryder rick.ryder@ williams.com	Natural Gas	N/A	N/A	N/A	N/A
Gwinnett Co Water & Sewer	Russell Maddox Russell.Maddox@ gwinnettcounty.com	Water/Sewer	N/A	N/A	N/A	N/A
Comcast CATV	Christopher Bates Christopher_Bates2@ cable.comcast.com	Telecom	N/A	N/A	N/A	N/A

Note: *To add additional rows, click the bottom right corner of the box above, then click the blue + that will appear. Please add additional rows prior to entering text.*

Attachment 6

Crash Summaries

Intersection Crash Analysis

HURRICANE TRAIL RD

Information on all crashes that occurred during the 2013-2017 period was summarized. The distribution of crash types as well as crash severity at intersections were analyzed.

Two intersections at Hurricane Trial Rd were analyzed. These include Hurricane Sholas Rd and SR 316 intersections. Property damage crashes account for three-quarter of all crashes observed. Approximately, a quarter of the total were injury crashes. It should be noted that one fatal crash has occurred at this intersection during the five-year period of 2013-2017. The fatal crash was observed at night time.

Summary of Crash Frequencies by Severity (Hurricane Trail Rd)

Intersection	Average Crash Frequency (2013-2017)			
	Fatal	Injury	Property Damage	Total
Hurricane Trail @ Hurricane Shoals	0	14	44	58
Hurricane Trail @ SR 316	1	56	155	212
Total	1	70	199	270
Percentage	0%	26%	74%	100%

Rear end and angle crashes comprise majority of crashes at the Hurricane Trail Rd. These two types of crashes account for 80% of all crashes. A few head-on crashes were also observed indicating potential sight distance or speed problems (2%). This type of crashes typically has severe consequences.

Summary of Crash Types in Hurricane Trail Region

Intersection	Crash Type (2013-2017)						
	Angle	Not a Collision with Motor Vehicle	Rear End	Sideswipe, Opposite Direction	Sideswipe, Same Direction	Head On	Total
Hurricane Trl @ Hurricane Shoals	20	15	15	4	3	1	58
Hurricane Trl @ SR 316	51	14	130	1	11	5	212
Total	71	29	145	5	14	6	270
Percentage	26%	11%	54%	2%	5%	2%	100%

It can be observed from the crash heat map that majority of crashes are concentrated at the intersections.

Crashes in the Hurricane Trail Rd

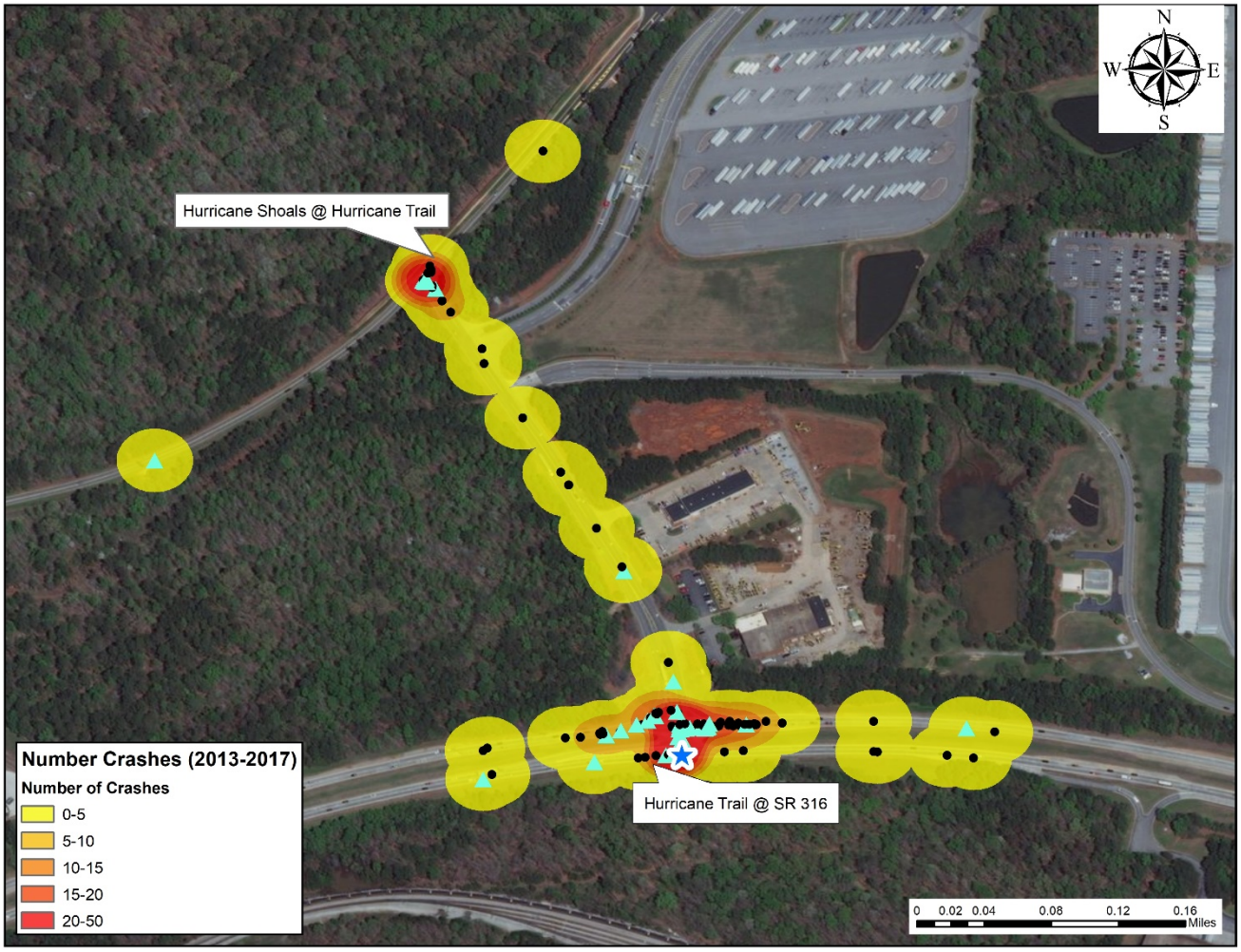

WINDER HWY

Information on all crashes that occured during the 2013-2017 period was summarized. The distribution of crash types as well as crash severity at intersections were analyzed.

The intersections included are the Fence Rd at SR316 and Winder Hwy at SR 316. It is evident that the intersection of Winder Hwy at SR 316 experienced higher number of crashes. This is expected because this intersection handles higher traffic volumes. Three quarters of these crashes are property damage only crashes and the rest were mainly injury crashes. However, it should be noted that the intersection of Winder Hwy and SR 316 saw two fatal crashes between the years 2013 and 2017. One fatal crash was angle type involved with a truck trailer and the other was single vehicle accident.

Summary of Crash Frequencies by Severity in Winder Hwy

Intersection	Average Crash Frequency (2013-2017)			
	Fatal	Injury	Property Damage	Total
Fence Rd @ SR 316	0	47	154	201
Winder Hwy @ SR 316	2	127	376	505
Total	2	174	530	706
Percentage	0%	25%	75%	100%

Rear end crashes contribute to approximately two-thirds of all crashes in the area. Angle crashes are the next most common type of crashes (20%). Altogether, rear end and angle crashes contribute to 86% of all crashes.

Summary of Crash Types in Winder Hwy

Intersection	Crash Type (2013-2017)						
	Angle	Not a Collision with Motor Vehicle	Rear End	Sideswipe, Opposite Direction	Sideswipe, Same Direction	Head On	Total
Fence Rd @ SR 316	53	4	118	8	15	3	201
Winder Hwy @ SR 316	88	20	350	5	33	9	505
Total	141	24	468	13	48	12	706
Percentage	20%	3%	66%	2%	7%	2%	100%

The clustering of crashes near the intersections can be observed in the heatmap shown. This clustering also shows crashes at driveways adjacent to the main intersections indicating potential traffic safety and operational issues. For instance, smaller hot-spots of crashes are seen at some of the intersections of Winder Hwy with commercial driveways and minor side-streets.

Arterial Crashes in the Winder Hwy Region

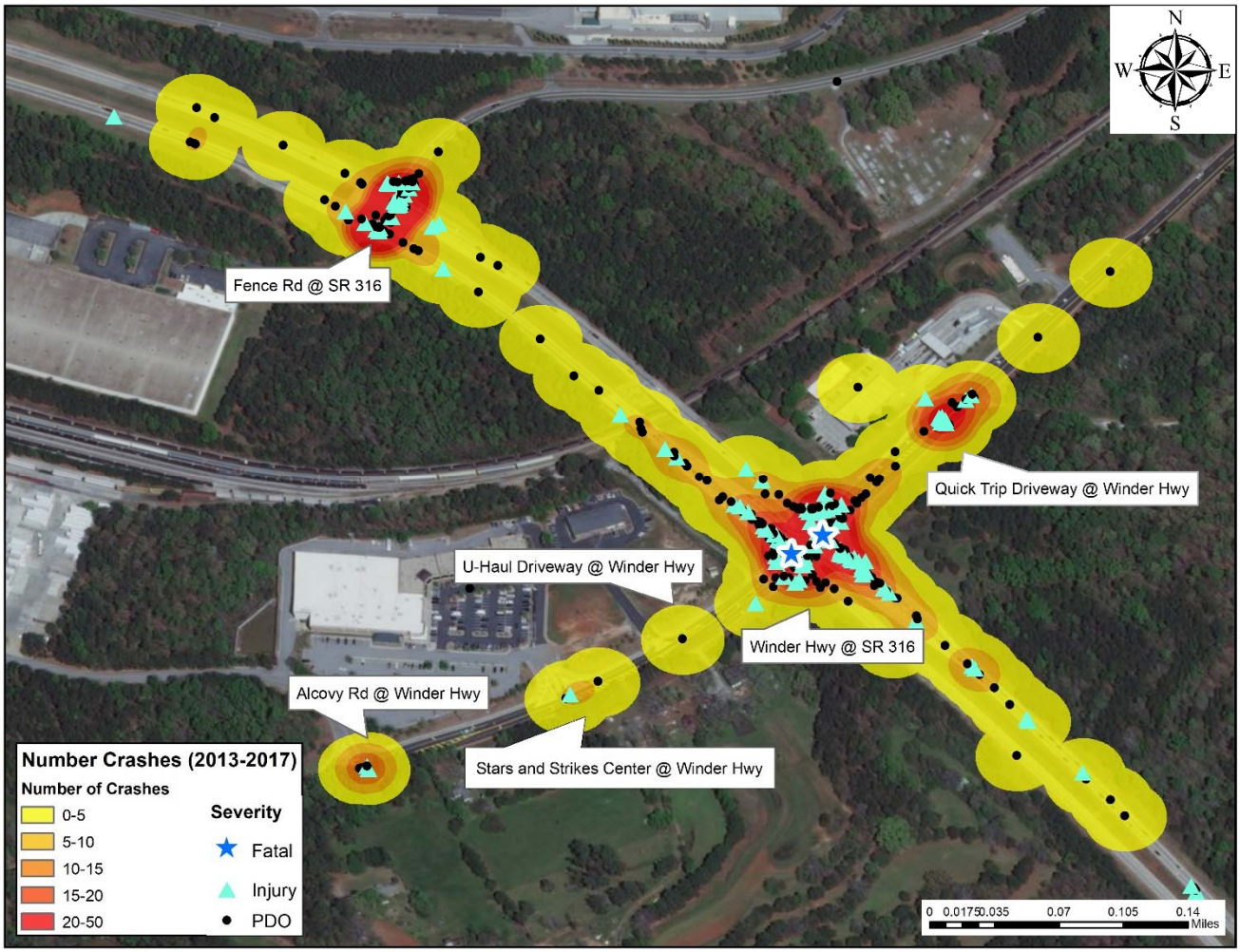

Attachment 7

Design Traffic Diagrams

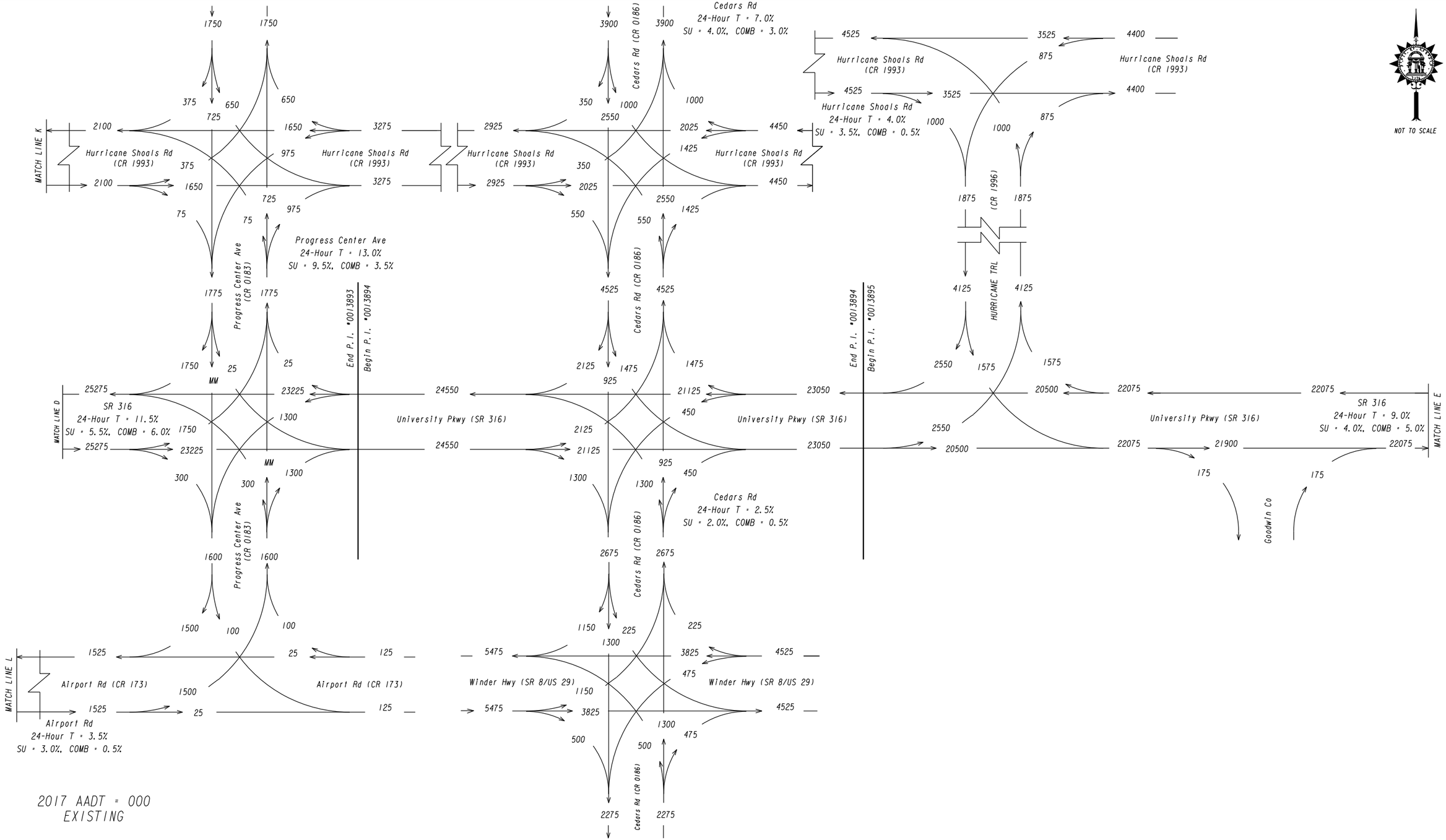

PI#'s 0013893-0013897
GWINNETT COUNTY
STATE ROUTE 316 (SR 316)
FM COLLINS HILL RD
TO DROWNING CREEK RD

2017 EXISTING TRAFFIC DIAGRAMS

GDOT
PROGRAM DELIVERY

ATKINS

REVISION DATES		
3-12-18	JRA	
4-25-18	JRA	
12-13-18	JRA	

TRAFFIC DIAGRAM
STATE ROUTE 316 (SR 316)
FM COLLINS HILL RD (CR 104)
TO DROWNING CREEK RD (CR 238)

CHECKED:		DATE:	
BACKCHECKED:		DATE:	
CORRECTED:		DATE:	
VERIFIED:		DATE:	

DRAWING No. 10-0003

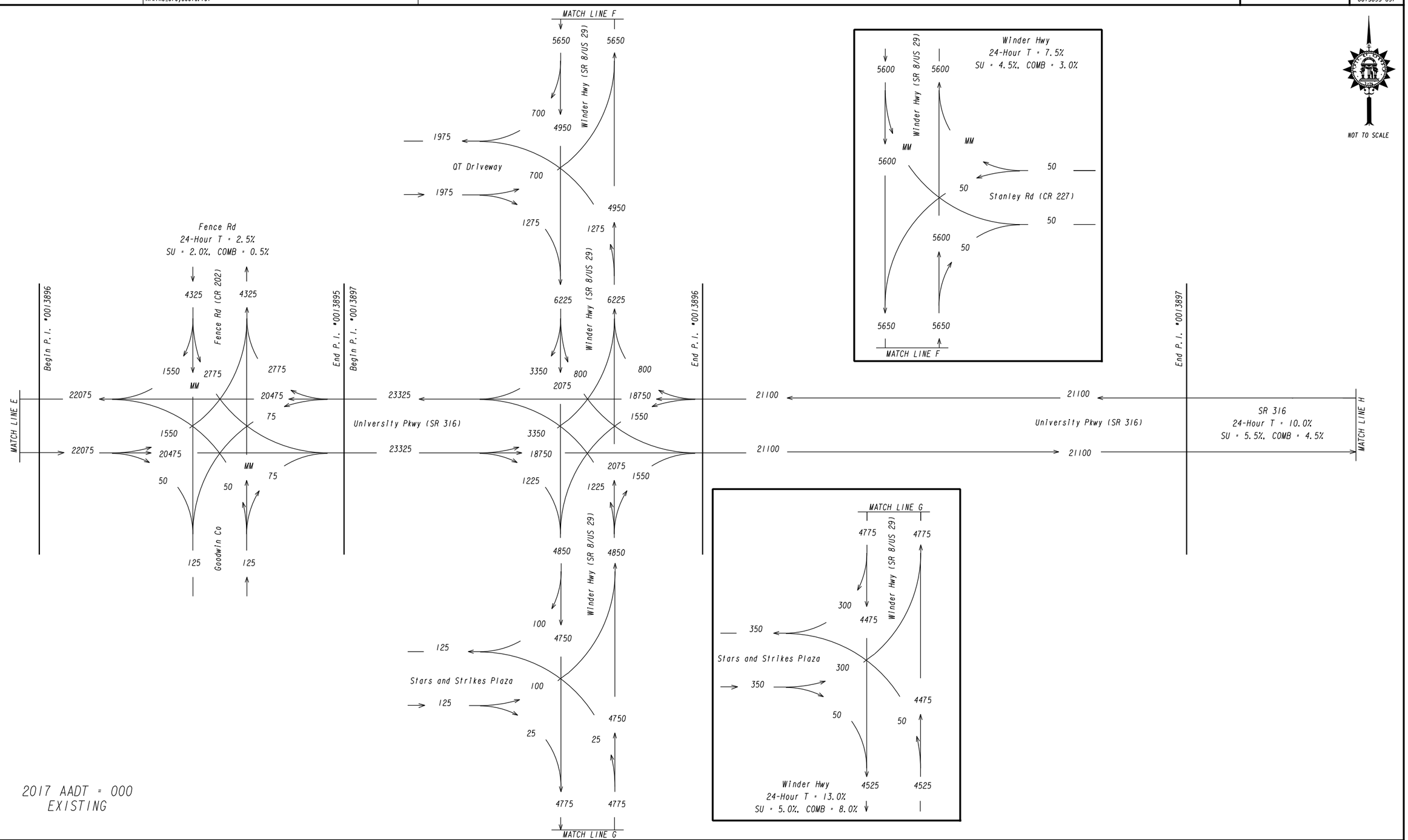

2017 AADT = 000
EXISTING

PI#'s 0013893-0013897
GWINNETT COUNTY
STATE ROUTE 316 (SR 316)
FM COLLINS HILL RD
TO DROWNING CREEK RD

2017 EXISTING TRAFFIC DIAGRAMS

PROGRAM DELIVERY

ATKINS

REVISION DATES		
3-12-18	JRA	
4-25-18	JRA	
12-13-18	JRA	

TRAFFIC DIAGRAM
STATE ROUTE 316 (SR 316)
FM COLLINS HILL RD (CR 104)
TO DROWNING CREEK RD (CR 238)

CHECKED:		DATE:	
BACKCHECKED:		DATE:	
CORRECTED:		DATE:	
VERIFIED:		DATE:	

DRAWING No.
10-0004

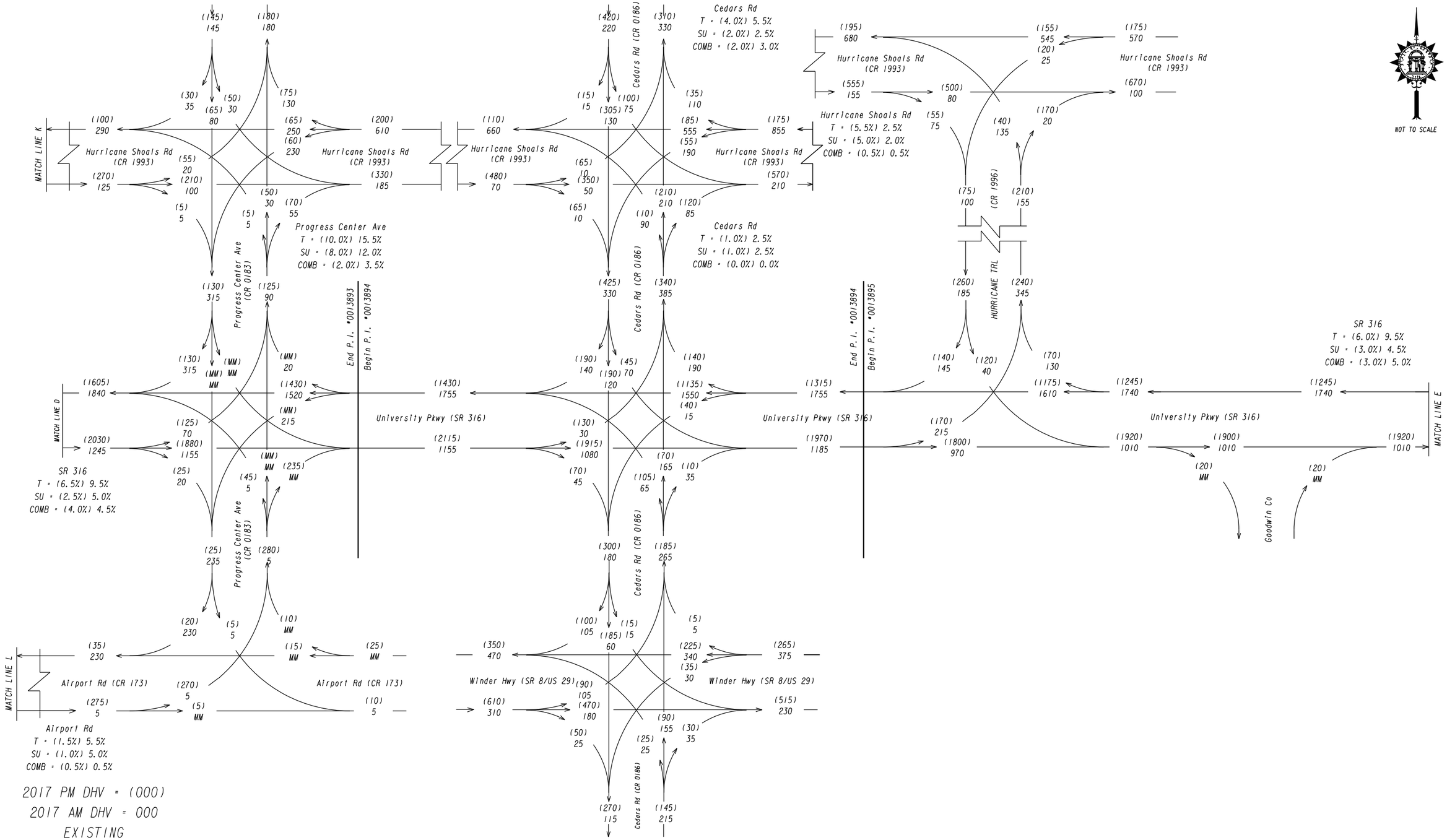

PI#'s 0013893-0013897
GWINNETT COUNTY
STATE ROUTE 316 (SR 316)
FM COLLINS HILL RD
TO DROWNING CREEK RD

2017 EXISTING TRAFFIC DIAGRAMS

GDOT
PROGRAM DELIVERY

ATKINS

REVISION DATES		
3-12-18	JRA	
4-25-18	JRA	
12-13-18	JRA	

TRAFFIC DIAGRAM
STATE ROUTE 316 (SR 316)
FM COLLINS HILL RD (CR 104)
TO DROWNING CREEK RD (CR 238)

CHECKED:		DATE:		DRAWING No.
BACKCHECKED:		DATE:		10-0009
CORRECTED:		DATE:		
VERIFIED:		DATE:		

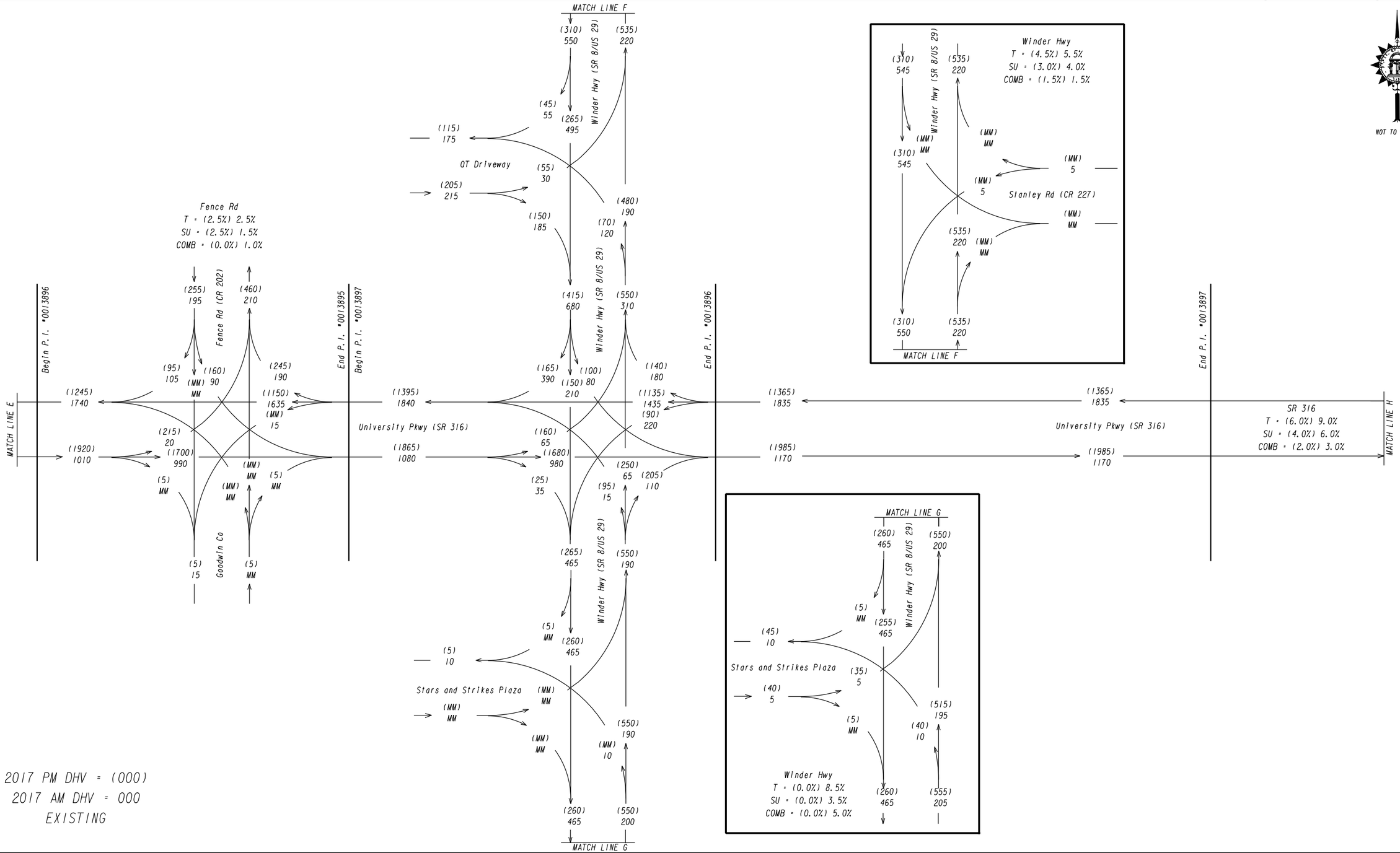

2017 PM DHV = (000)
2017 AM DHV = 000
EXISTING

PI#'s 0013893-0013897 GWINNETT COUNTY STATE ROUTE 316 (SR 316) FM COLLINS HILL RD TO DROWNING CREEK RD	2017 EXISTING TRAFFIC DIAGRAMS	GDOT PROGRAM DELIVERY	ATKINS	TRAFFIC DIAGRAM STATE ROUTE 316 (SR 316) FM COLLINS HILL RD (CR 104) TO DROWNING CREEK RD (CR 238)

REVISION DATES

3-12-18	JRA	
4-25-18	JRA	
12-13-18	JRA	

CHECKED:		DATE:	
BACKCHECKED:		DATE:	
CORRECTED:		DATE:	
VERIFIED:		DATE:	

DRAWING No. 10-0010

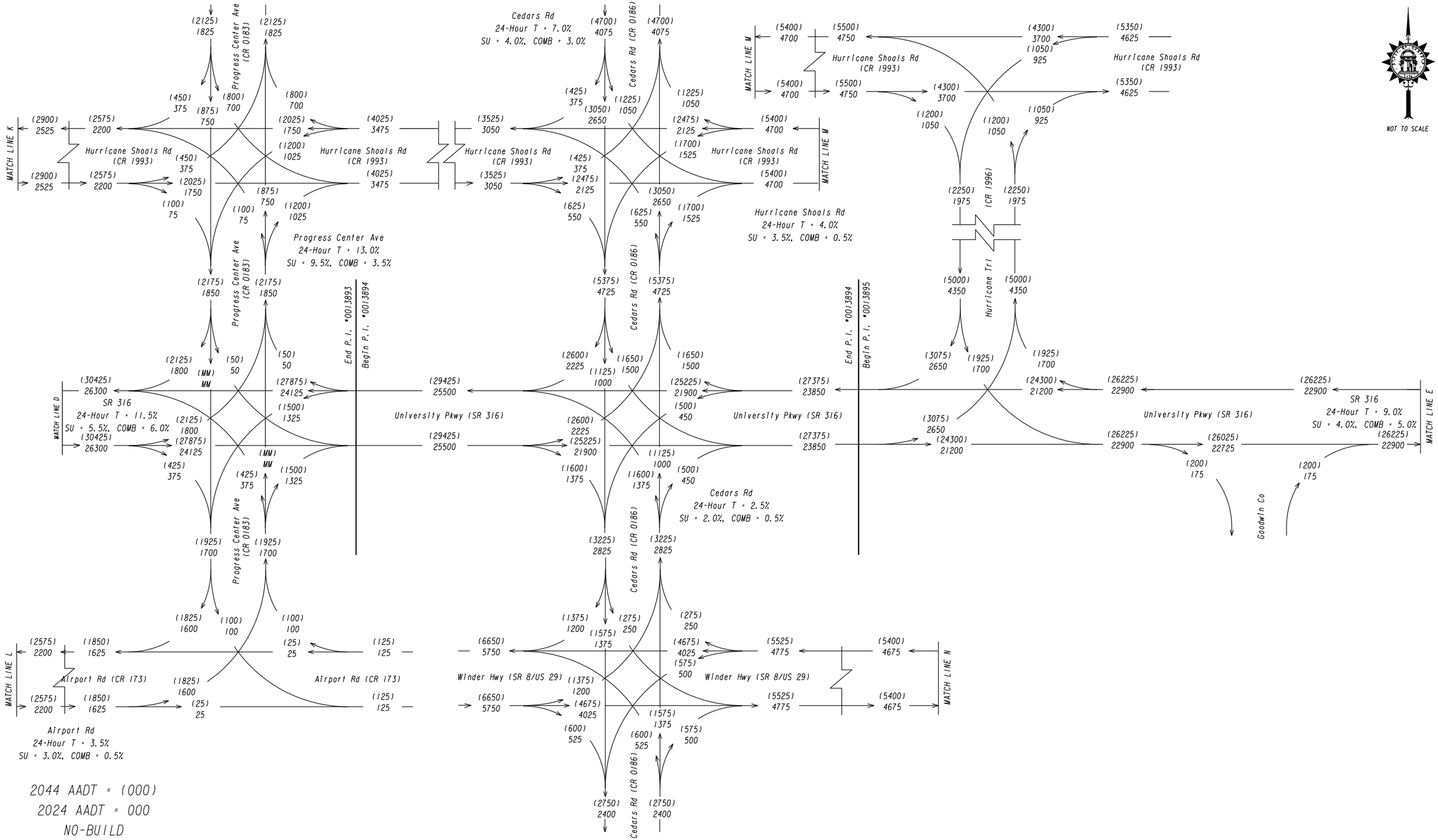

PI#'s 0013893-0013897
GWINNETT COUNTY
STATE ROUTE 316 (SR 316)
FM COLLINS HILL RD
TO DROWNING CREEK RD

2024/2044 FUTURE TRAFFIC DIAGRAMS

GDOT PROGRAM DELIVERY

ATKINS

REVISION DATES		
3-12-18	JRA	
4-25-18	JRA	
12-13-18	JRA	

TRAFFIC DIAGRAM
STATE ROUTE 316 (SR 316)
FM COLLINS HILL RD (CR 104)
TO DROWNING CREEK RD (CR 238)

CHECKED:		DATE:	
BACKCHECKED:		DATE:	
CORRECTED:		DATE:	
VERIFIED:		DATE:	

DRAWING No. 10-0015

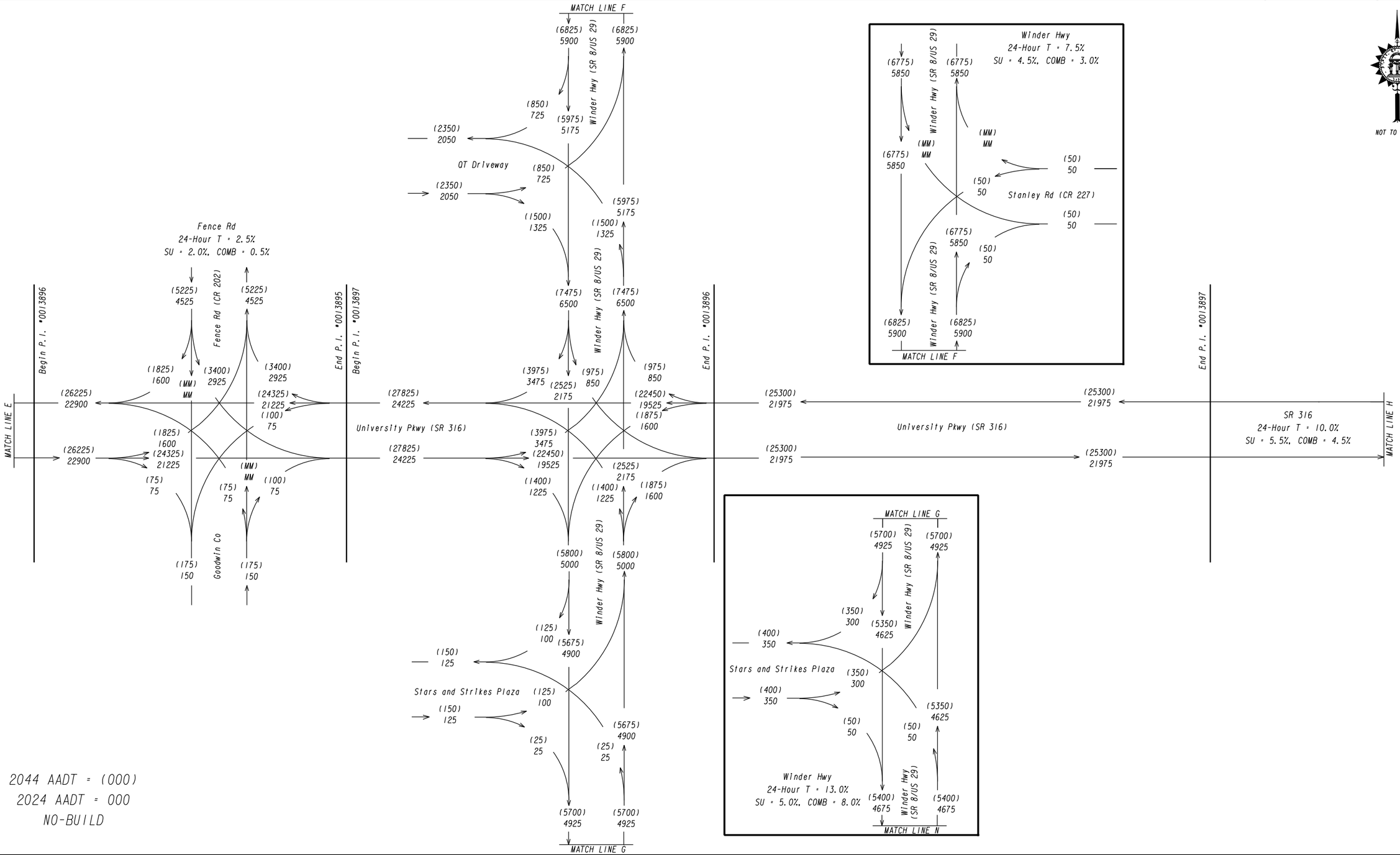

PI#'s 0013893-0013897
GWINNETT COUNTY
STATE ROUTE 316 (SR 316)
FM COLLINS HILL RD
TO DROWNING CREEK RD

2024/2044 FUTURE TRAFFIC DIAGRAMS

PROGRAM DELIVERY

ATKINS

REVISION DATES		
3-12-18	JRA	
4-25-18	JRA	
12-13-18	JRA	

TRAFFIC DIAGRAM
STATE ROUTE 316 (SR 316)
FM COLLINS HILL RD (CR 104)
TO DROWNING CREEK RD (CR 238)

CHECKED:		DATE:	
BACKCHECKED:		DATE:	
CORRECTED:		DATE:	
VERIFIED:		DATE:	

DRAWING No.
10-0016

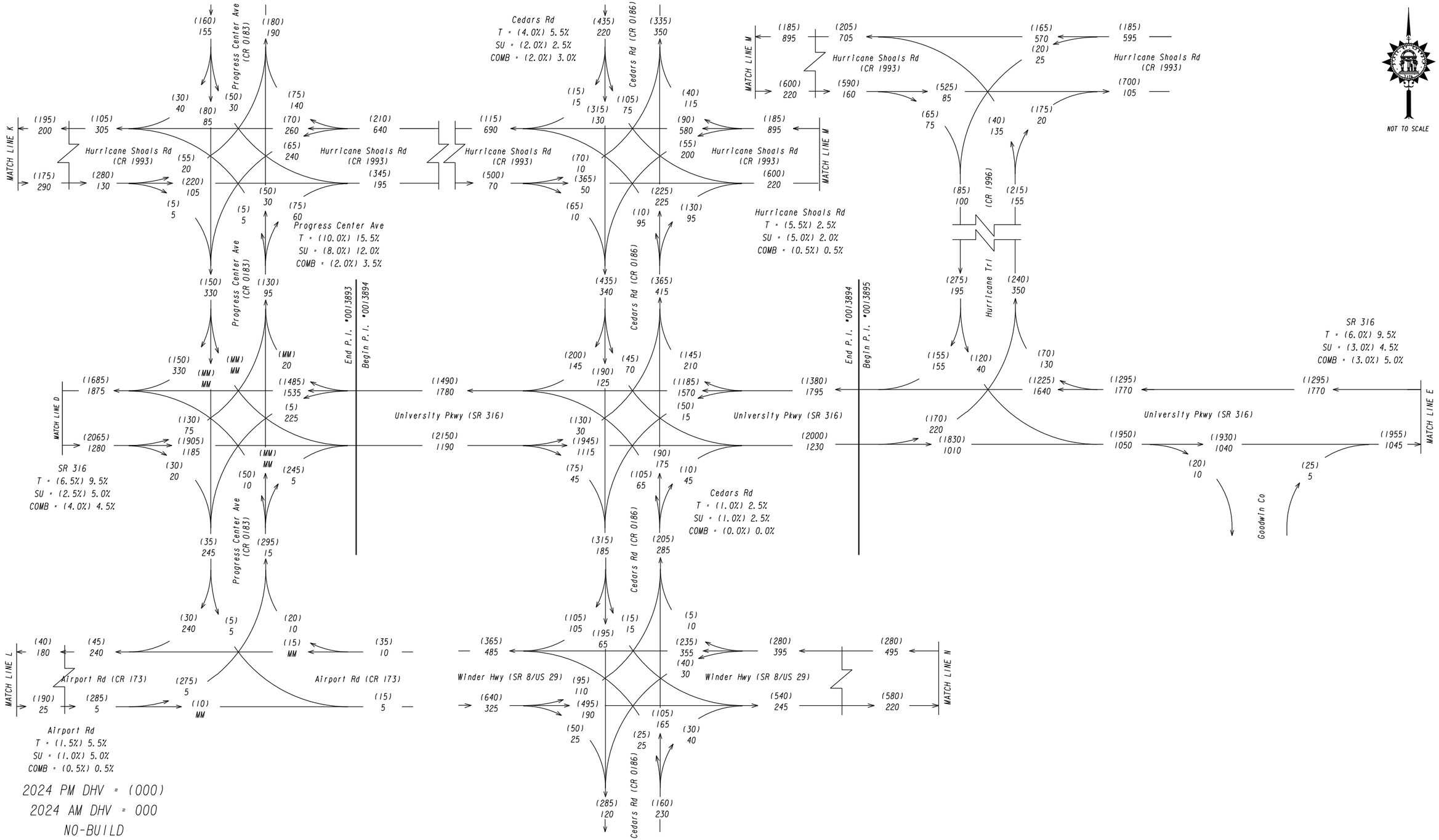

PI#'s 0013893-0013897
GWINNETT COUNTY
STATE ROUTE 316 (SR 316)
FM COLLINS HILL RD
TO DROWNING CREEK RD

2024/2044 FUTURE TRAFFIC DIAGRAMS

GDOT PROGRAM DELIVERY

ATKINS

REVISION DATES		
3-12-18	JRA	
4-25-18	JRA	
12-13-18	JRA	

TRAFFIC DIAGRAM
STATE ROUTE 316 (SR 316)
FM COLLINS HILL RD (CR 104)
TO DROWNING CREEK RD (CR 238)

CHECKED:		DATE:	
BACKCHECKED:		DATE:	
CORRECTED:		DATE:	
VERIFIED:		DATE:	

DRAWING No. 10-0021

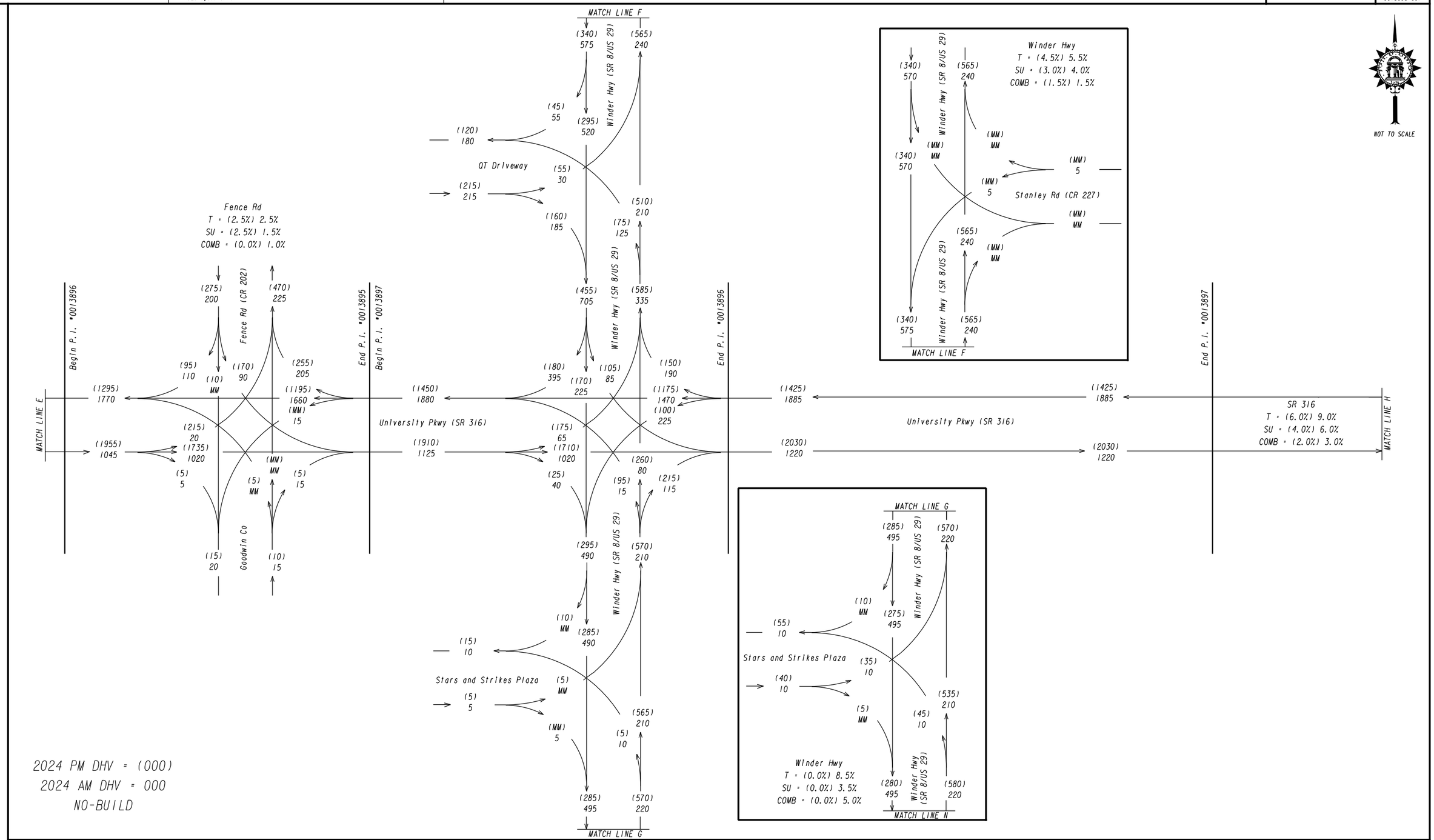

2024 PM DHV = (000)
2024 AM DHV = 000
NO-BUILD

PI#'s 0013893-0013897
GWINNETT COUNTY
STATE ROUTE 316 (SR 316)
FM COLLINS HILL RD
TO DROWNING CREEK RD

2024/2044 FUTURE TRAFFIC DIAGRAMS

GDOT PROGRAM DELIVERY

ATKINS

REVISION DATES		
3-12-18	JRA	
4-25-18	JRA	
12-13-18	JRA	

TRAFFIC DIAGRAM
STATE ROUTE 316 (SR 316)
FM COLLINS HILL RD (CR 104)
TO DROWNING CREEK RD (CR 238)

CHECKED:		DATE:	
BACKCHECKED:		DATE:	
CORRECTED:		DATE:	
VERIFIED:		DATE:	

DRAWING No. 10-0022

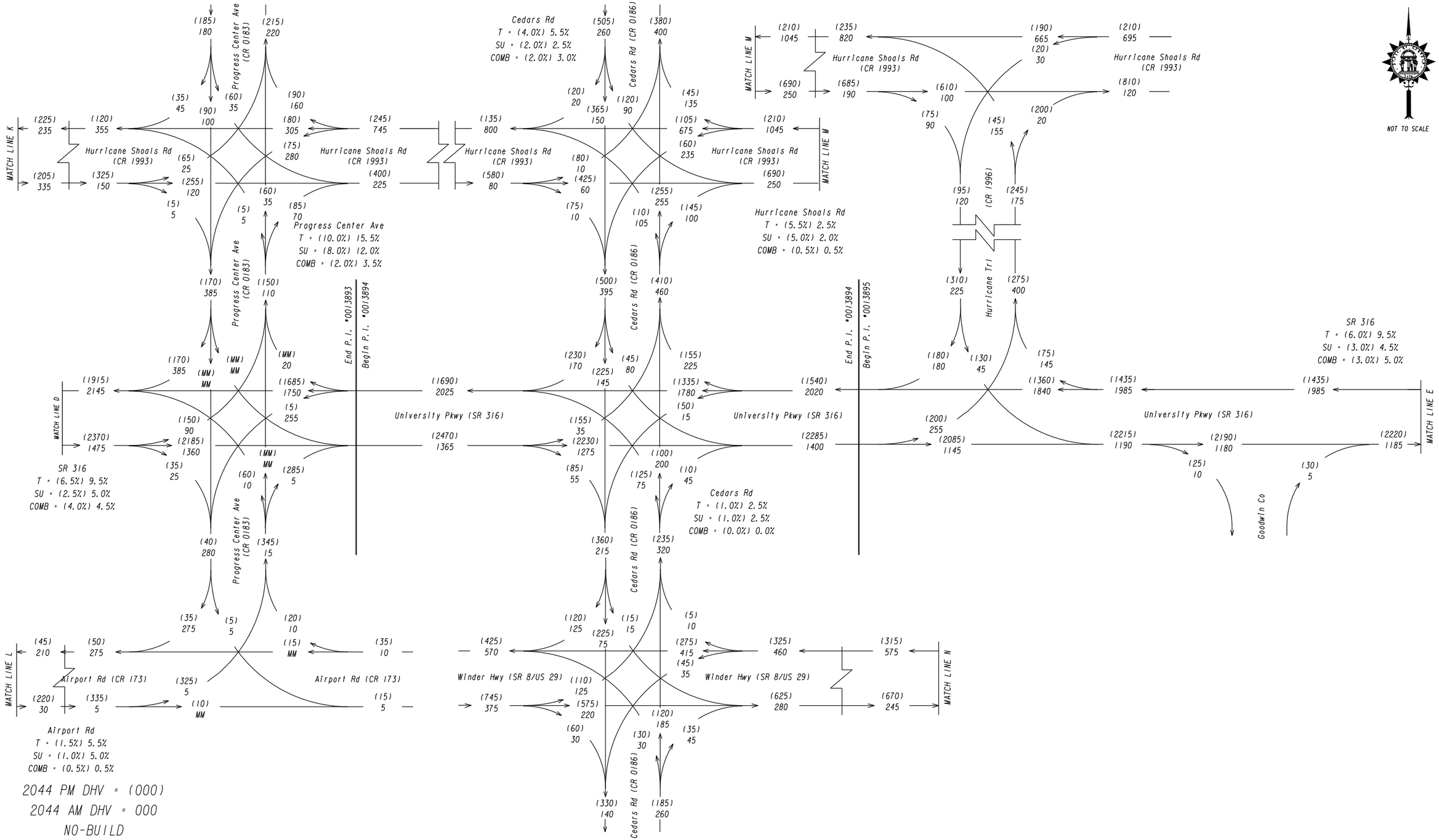

PI#'s 0013893-0013897
GWINNETT COUNTY
STATE ROUTE 316 (SR 316)
FM COLLINS HILL RD
TO DROWNING CREEK RD

2024/2044 FUTURE TRAFFIC DIAGRAMS

GDOT PROGRAM DELIVERY

ATKINS

REVISION DATES		
3-12-18	JRA	
4-25-18	JRA	
12-13-18	JRA	

TRAFFIC DIAGRAM
STATE ROUTE 316 (SR 316)
FM COLLINS HILL RD (CR 104)
TO DROWNING CREEK RD (CR 238)

CHECKED:		DATE:	
BACKCHECKED:		DATE:	
CORRECTED:		DATE:	
VERIFIED:		DATE:	

DRAWING No. 10-0027

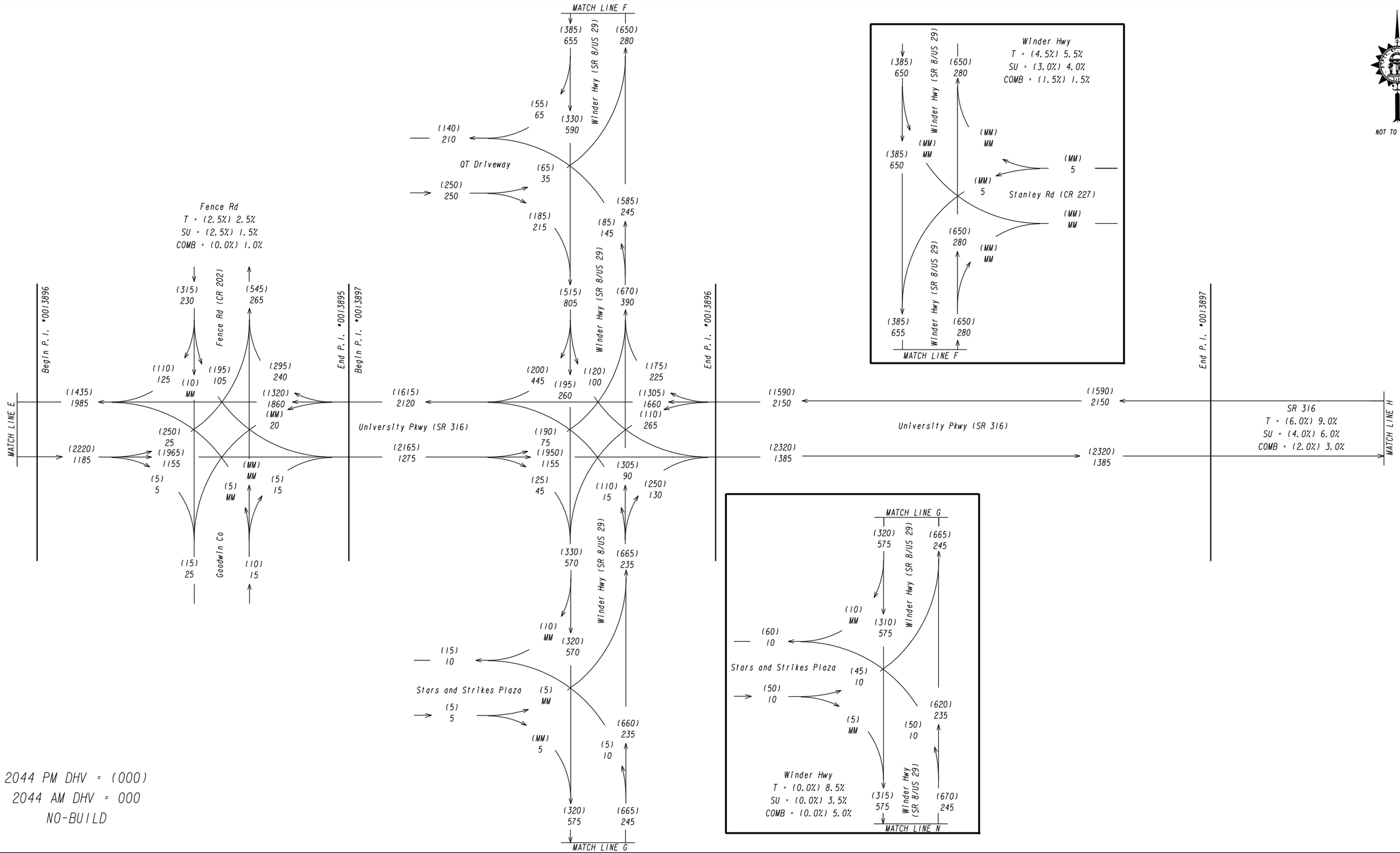

2044 PM DHV = (000)
2044 AM DHV = 000
NO-BUILD

PI#'s 0013893-0013897
GWINNETT COUNTY
STATE ROUTE 316 (SR 316)
FM COLLINS HILL RD
TO DROWNING CREEK RD

2024/2044 FUTURE TRAFFIC DIAGRAMS

GDOT PROGRAM DELIVERY

ATKINS

REVISION DATES		
3-12-18	JRA	
4-25-18	JRA	
12-13-18	JRA	

TRAFFIC DIAGRAM
STATE ROUTE 316 (SR 316)
FM COLLINS HILL RD (CR 104)
TO DROWNING CREEK RD (CR 238)

CHECKED:		DATE:	
BACKCHECKED:		DATE:	
CORRECTED:		DATE:	
VERIFIED:		DATE:	

DRAWING No. 10-0028

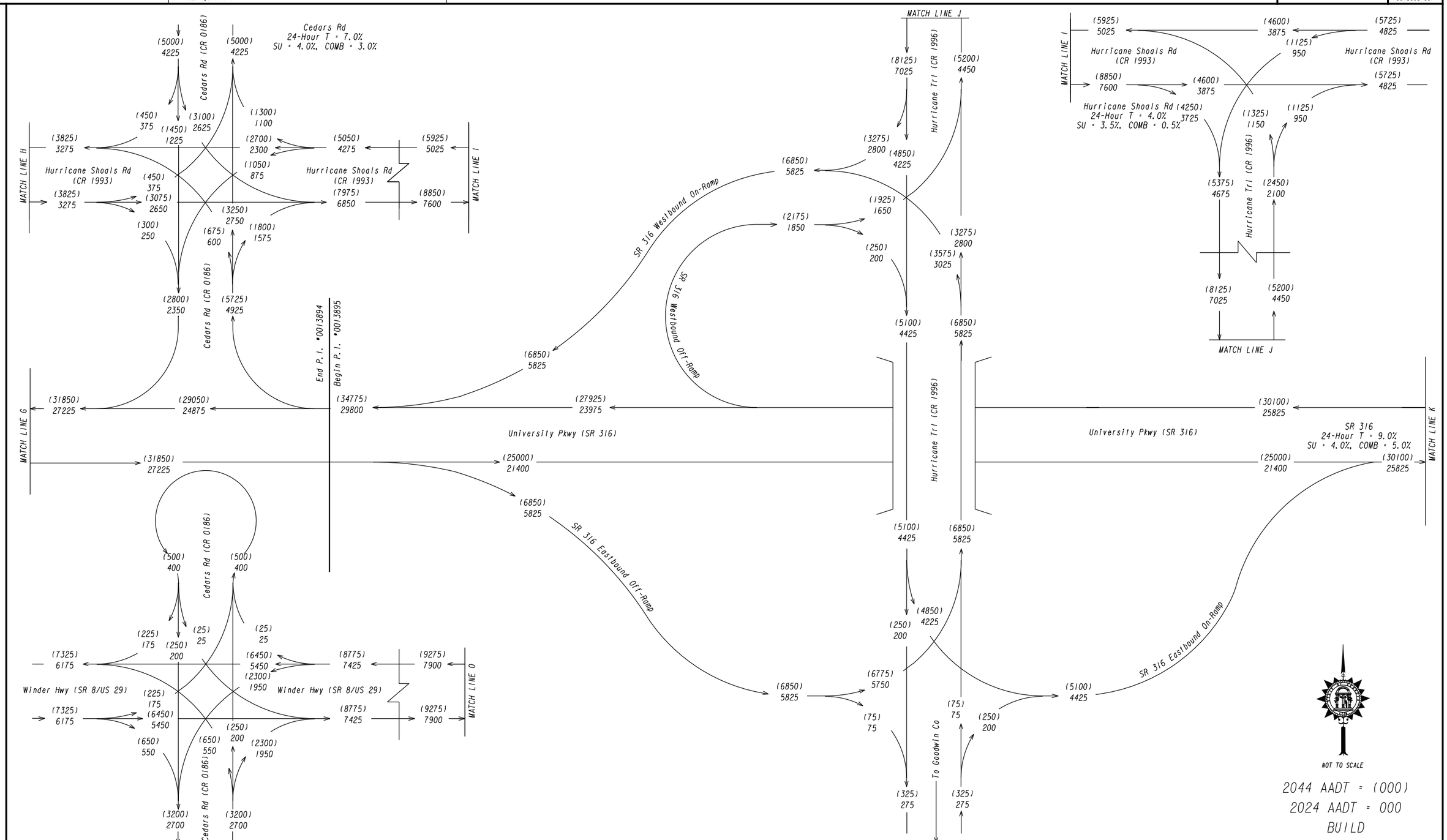

PI#'s 0013893-0013897
GWINNETT COUNTY
STATE ROUTE 316 (SR 316)
FM COLLINS HILL RD
TO DROWNING CREEK RD

2024/2044 FUTURE TRAFFIC DIAGRAMS

GDOT
PROGRAM DELIVERY

ATKINS

REVISION DATES		
3-12-18	JRA	
4-25-18	JRA	
12-13-18	JRA	

TRAFFIC DIAGRAM
STATE ROUTE 316 (SR 316)
FM COLLINS HILL RD (CR 104)
TO DROWNING CREEK RD (CR 238)

CHECKED:		DATE:	
BACKCHECKED:		DATE:	
CORRECTED:		DATE:	
VERIFIED:		DATE:	

DRAWING No.
10-0034

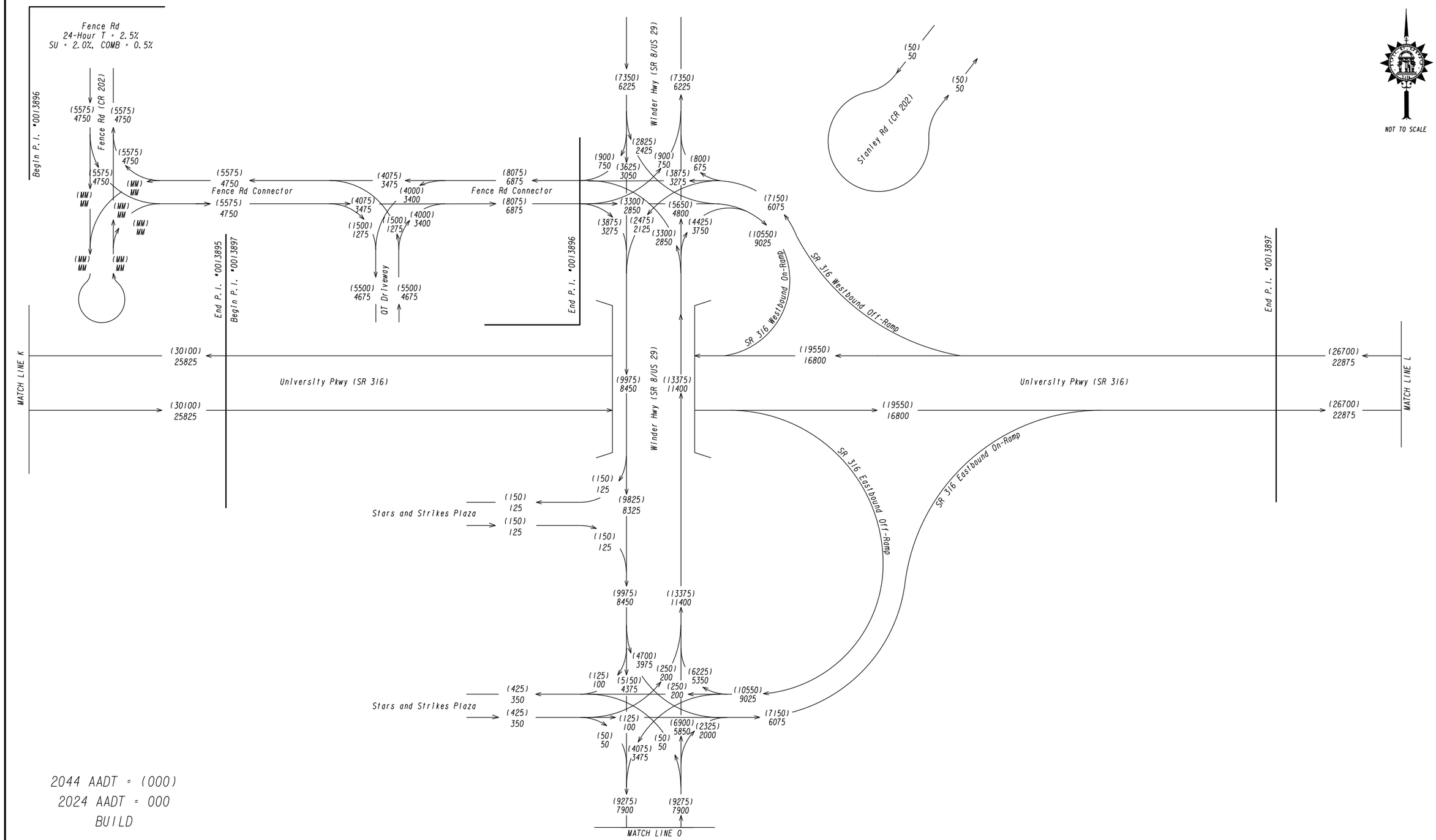

2044 AADT = (000)
2024 AADT = 000
BUILD

PI#'s 0013893-0013897
GWINNETT COUNTY
STATE ROUTE 316 (SR 316)
FM COLLINS HILL RD
TO DROWNING CREEK RD

2024/2044 FUTURE TRAFFIC DIAGRAMS

PROGRAM DELIVERY

ATKINS

REVISION DATES		
3-12-18	JRA	
4-25-18	JRA	
12-13-18	JRA	

TRAFFIC DIAGRAM
STATE ROUTE 316 (SR 316)
FM COLLINS HILL RD (CR 104)
TO DROWNING CREEK RD (CR 238)

CHECKED:		DATE:	
BACKCHECKED:		DATE:	
CORRECTED:		DATE:	
VERIFIED:		DATE:	

DRAWING No.
10-0035

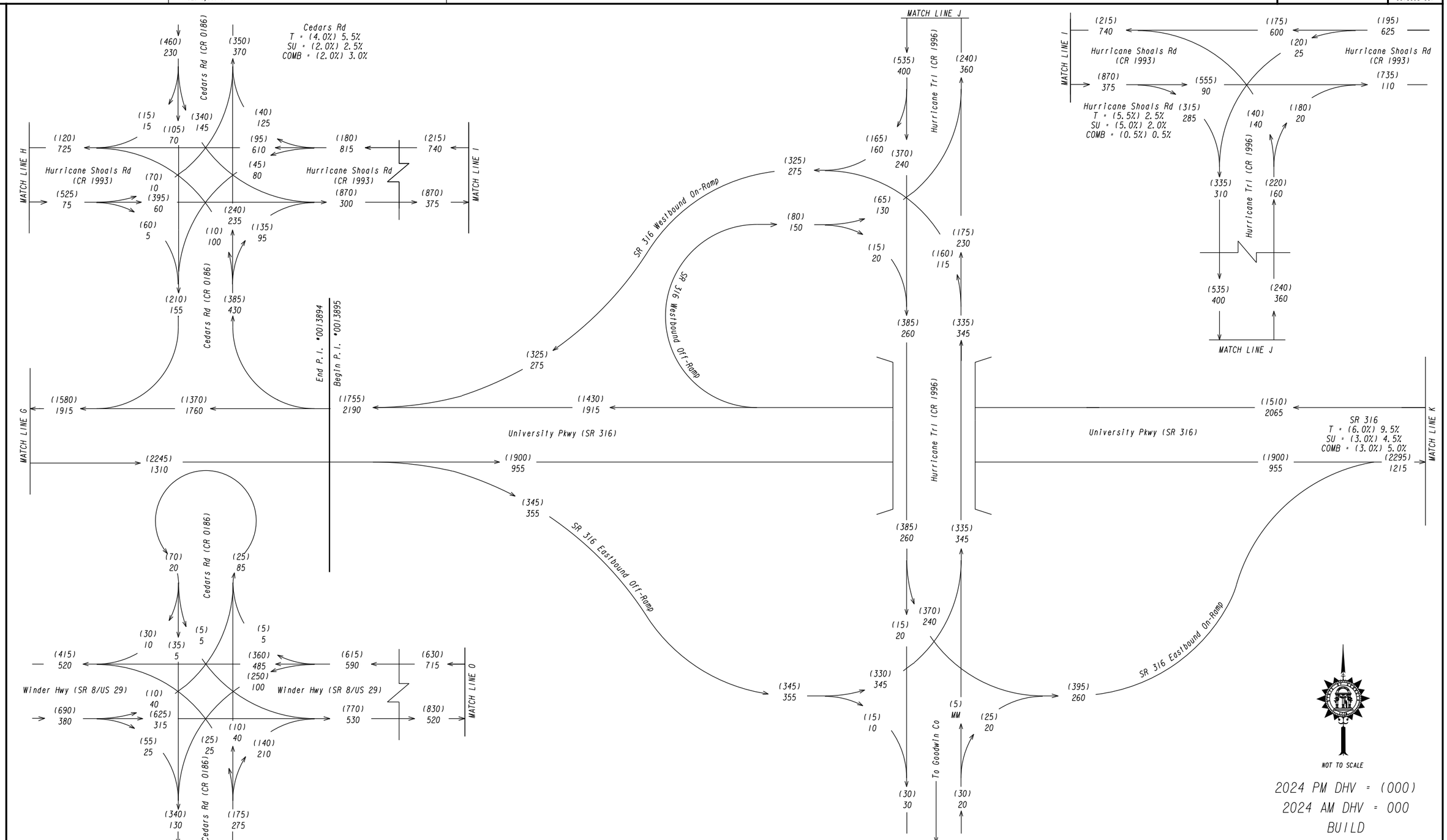

PI#'s 0013893-0013897
GWINNETT COUNTY
STATE ROUTE 316 (SR 316)
FM COLLINS HILL RD
TO DROWNING CREEK RD

2024/2044 FUTURE TRAFFIC DIAGRAMS

GDOT
PROGRAM DELIVERY

ATKINS

REVISION DATES		
3-12-18	JRA	
4-25-18	JRA	
12-13-18	JRA	

TRAFFIC DIAGRAM
STATE ROUTE 316 (SR 316)
FM COLLINS HILL RD (CR 104)
TO DROWNING CREEK RD (CR 238)

CHECKED:		DATE:	
BACKCHECKED:		DATE:	
CORRECTED:		DATE:	
VERIFIED:		DATE:	

DRAWING No.
10-0041

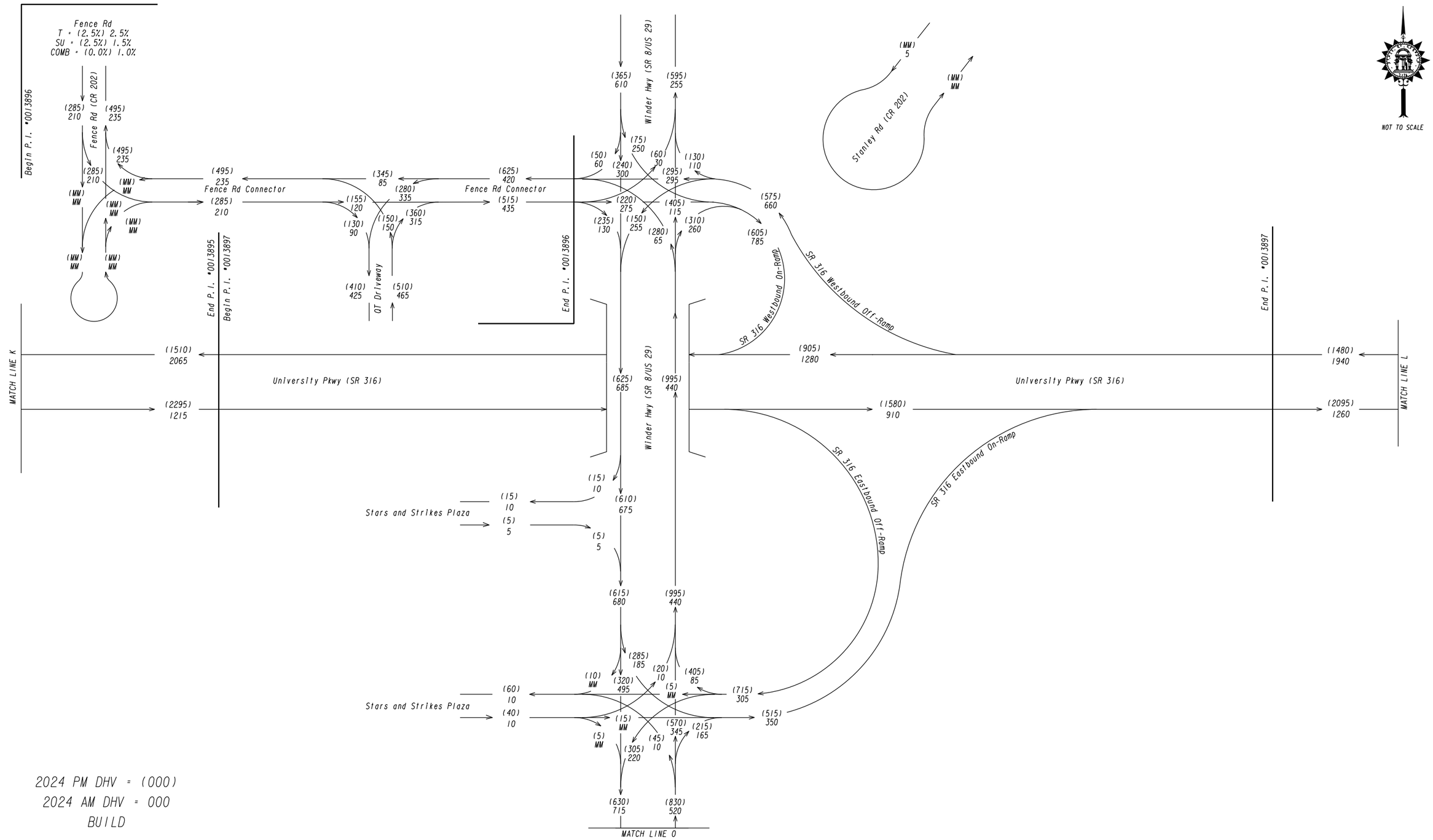

2024 PM DHV = (000)
2024 AM DHV = 000
BUILD

PI#'s 0013893-0013897
GWINNETT COUNTY
STATE ROUTE 316 (SR 316)
FM COLLINS HILL RD
TO DROWNING CREEK RD

2024/2044 FUTURE TRAFFIC DIAGRAMS

GDOT
PROGRAM DELIVERY

ATKINS

REVISION DATES		
3-12-18	JRA	
4-25-18	JRA	
12-13-18	JRA	

TRAFFIC DIAGRAM
STATE ROUTE 316 (SR 316)
FM COLLINS HILL RD (CR 104)
TO DROWNING CREEK RD (CR 238)

CHECKED:		DATE:	
BACKCHECKED:		DATE:	
CORRECTED:		DATE:	
VERIFIED:		DATE:	

DRAWING No.
10-0042

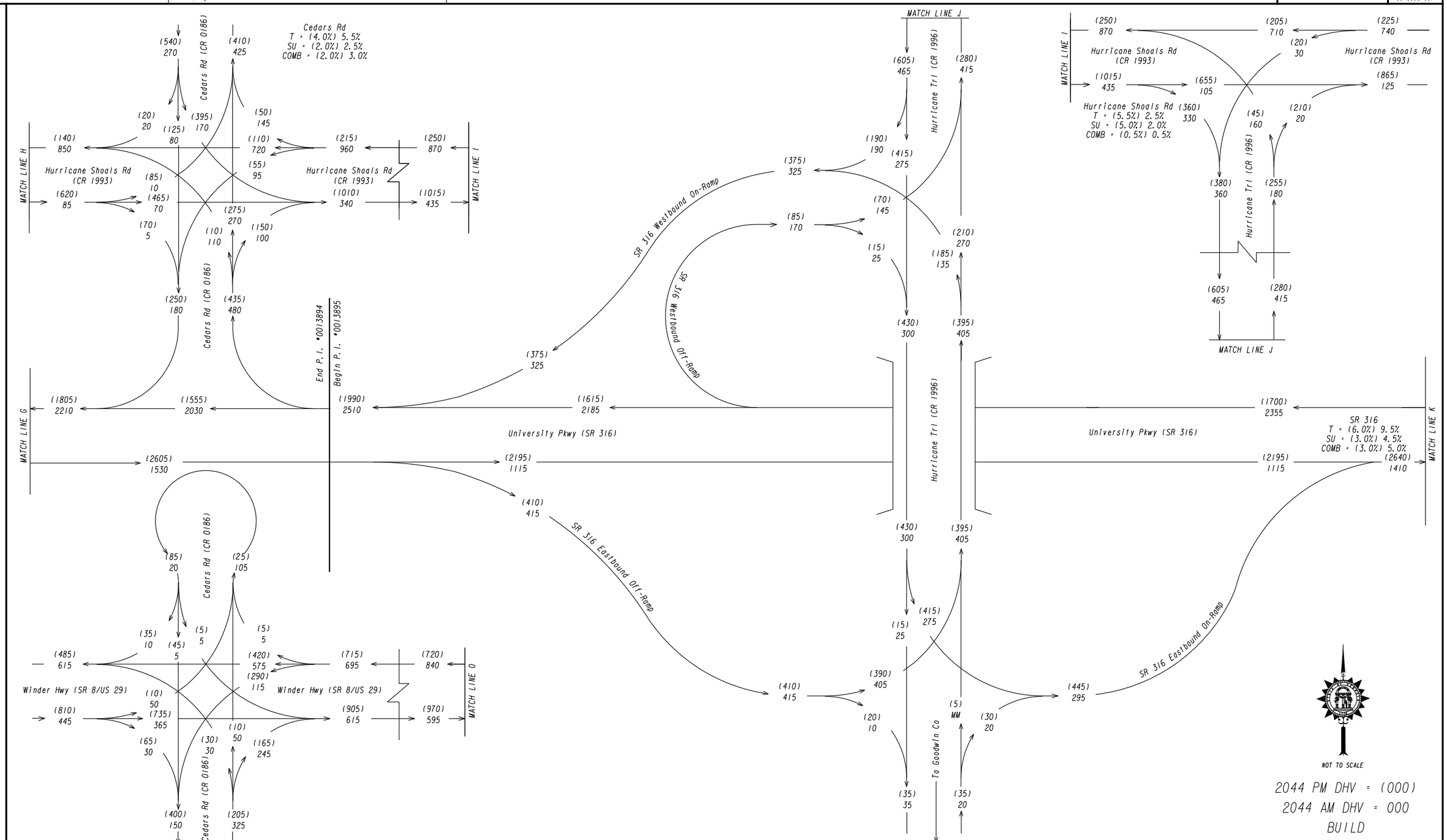

2044 PM DHV = (000)
2044 AM DHV = 000
BUILD

PI#'s 0013893-0013897
GWINNETT COUNTY
STATE ROUTE 316 (SR 316)
FM COLLINS HILL RD
TO DROWNING CREEK RD

2024/2044 FUTURE TRAFFIC DIAGRAMS

GDOT
PROGRAM DELIVERY

ATKINS

REVISION DATES		
3-12-18	JRA	
4-25-18	JRA	
12-13-18	JRA	

TRAFFIC DIAGRAM
STATE ROUTE 316 (SR 316)
FM COLLINS HILL RD (CR 104)
TO DROWNING CREEK RD (CR 238)

CHECKED:		DATE:	
BACKCHECKED:		DATE:	
CORRECTED:		DATE:	
VERIFIED:		DATE:	

DRAWING No.
10-0048

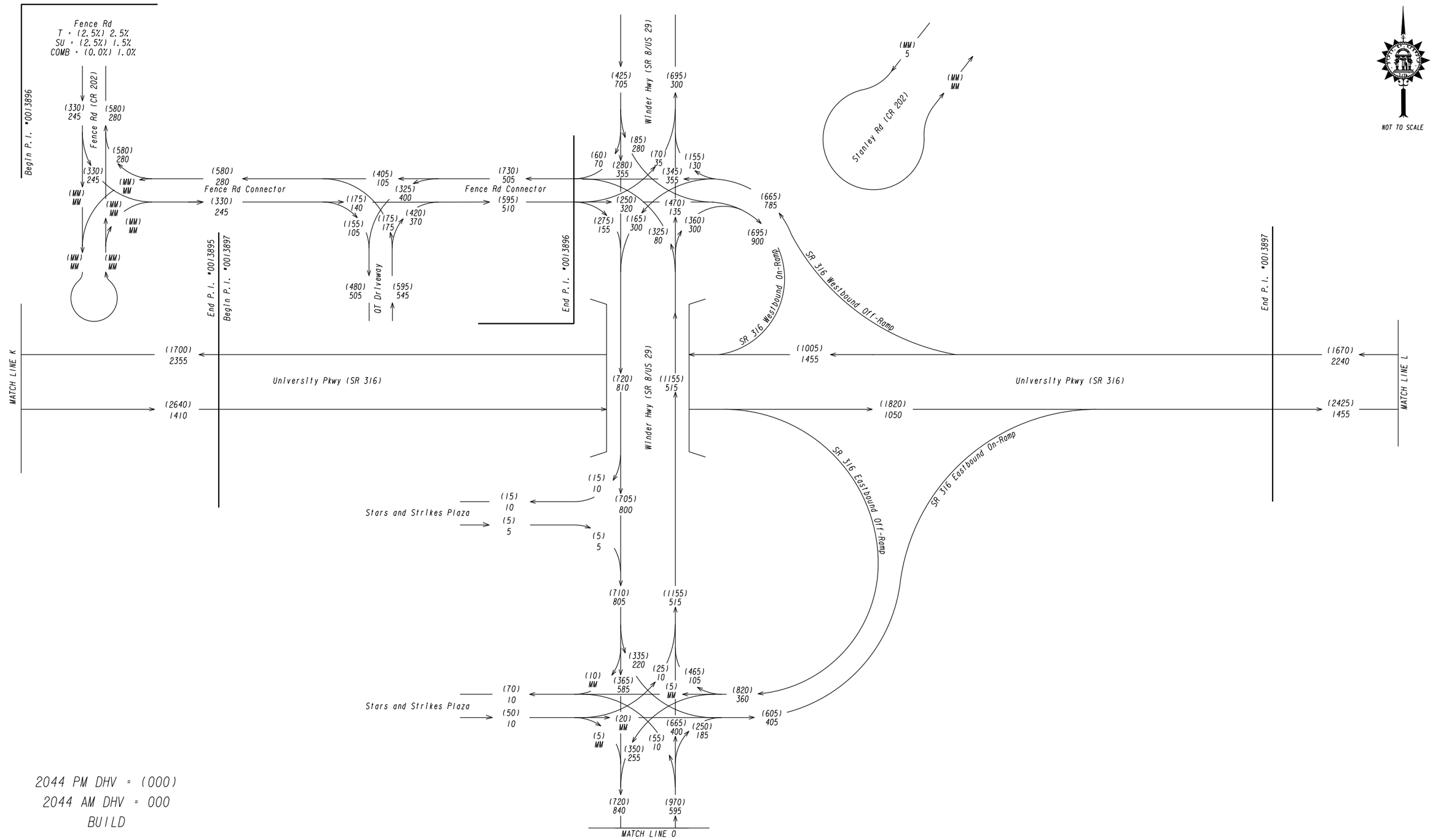

2044 PM DHV = (000)
2044 AM DHV = 000
BUILD

PI#'s 0013893-0013897
GWINNETT COUNTY
STATE ROUTE 316 (SR 316)
FM COLLINS HILL RD
TO DROWNING CREEK RD

2024/2044 FUTURE TRAFFIC DIAGRAMS

PROGRAM DELIVERY

ATKINS

REVISION DATES		
3-12-18	JRA	
4-25-18	JRA	
12-13-18	JRA	

TRAFFIC DIAGRAM
STATE ROUTE 316 (SR 316)
FM COLLINS HILL RD (CR 104)
TO DROWNING CREEK RD (CR 238)

CHECKED:		DATE:	
BACKCHECKED:		DATE:	
CORRECTED:		DATE:	
VERIFIED:		DATE:	

DRAWING No.
10-0049

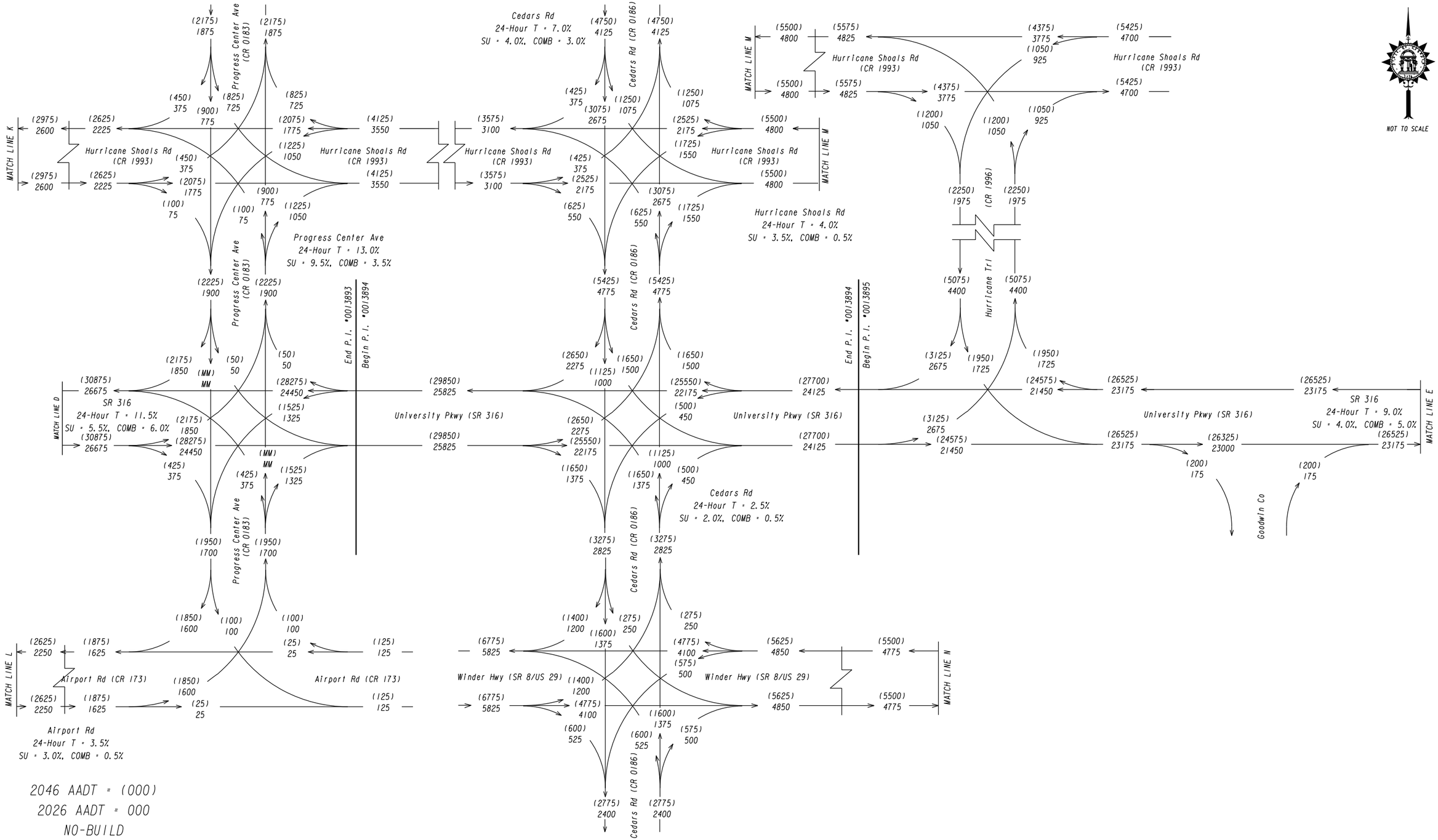

PI#'s 0013893-0013897
GWINNETT COUNTY
STATE ROUTE 316 (SR 316)
FM COLLINS HILL RD
TO DROWNING CREEK RD

2026/2046 FUTURE TRAFFIC DIAGRAMS

GDOT PROGRAM DELIVERY

ATKINS

REVISION DATES		
3-12-18	JRA	
4-25-18	JRA	
12-13-18	JRA	

TRAFFIC DIAGRAM
STATE ROUTE 316 (SR 316)
FM COLLINS HILL RD (CR 104)
TO DROWNING CREEK RD (CR 238)

CHECKED:		DATE:	
BACKCHECKED:		DATE:	
CORRECTED:		DATE:	
VERIFIED:		DATE:	

DRAWING No. 10-0054

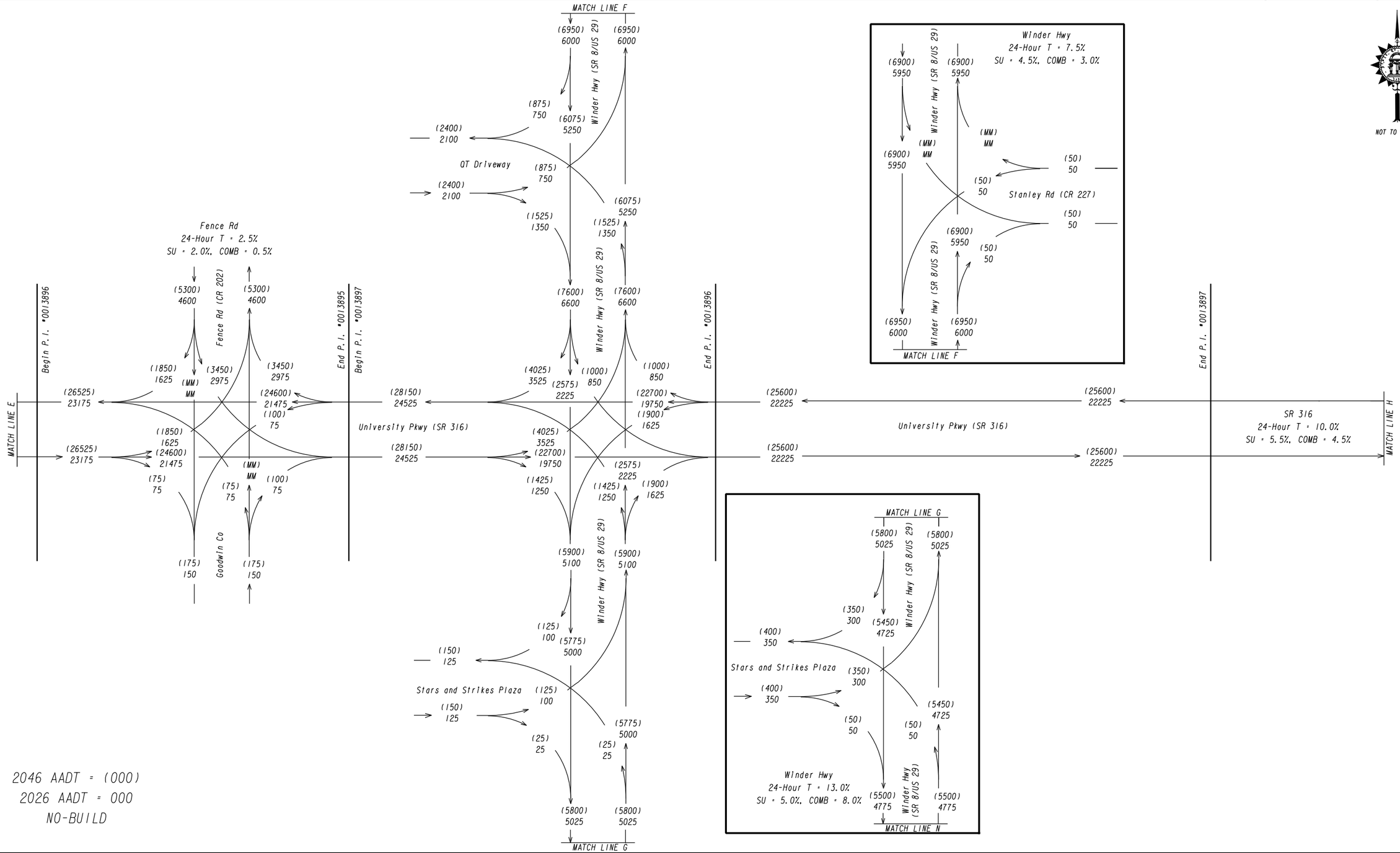

PI#'s 0013893-0013897
GWINNETT COUNTY
STATE ROUTE 316 (SR 316)
FM COLLINS HILL RD
TO DROWNING CREEK RD

2026/2046 FUTURE TRAFFIC DIAGRAMS

GDOT
PROGRAM DELIVERY

ATKINS

REVISION DATES		
3-12-18	JRA	
4-25-18	JRA	
12-13-18	JRA	

TRAFFIC DIAGRAM
STATE ROUTE 316 (SR 316)
FM COLLINS HILL RD (CR 104)
TO DROWNING CREEK RD (CR 238)

CHECKED:		DATE:	
BACKCHECKED:		DATE:	
CORRECTED:		DATE:	
VERIFIED:		DATE:	

DRAWING No.
10-0055

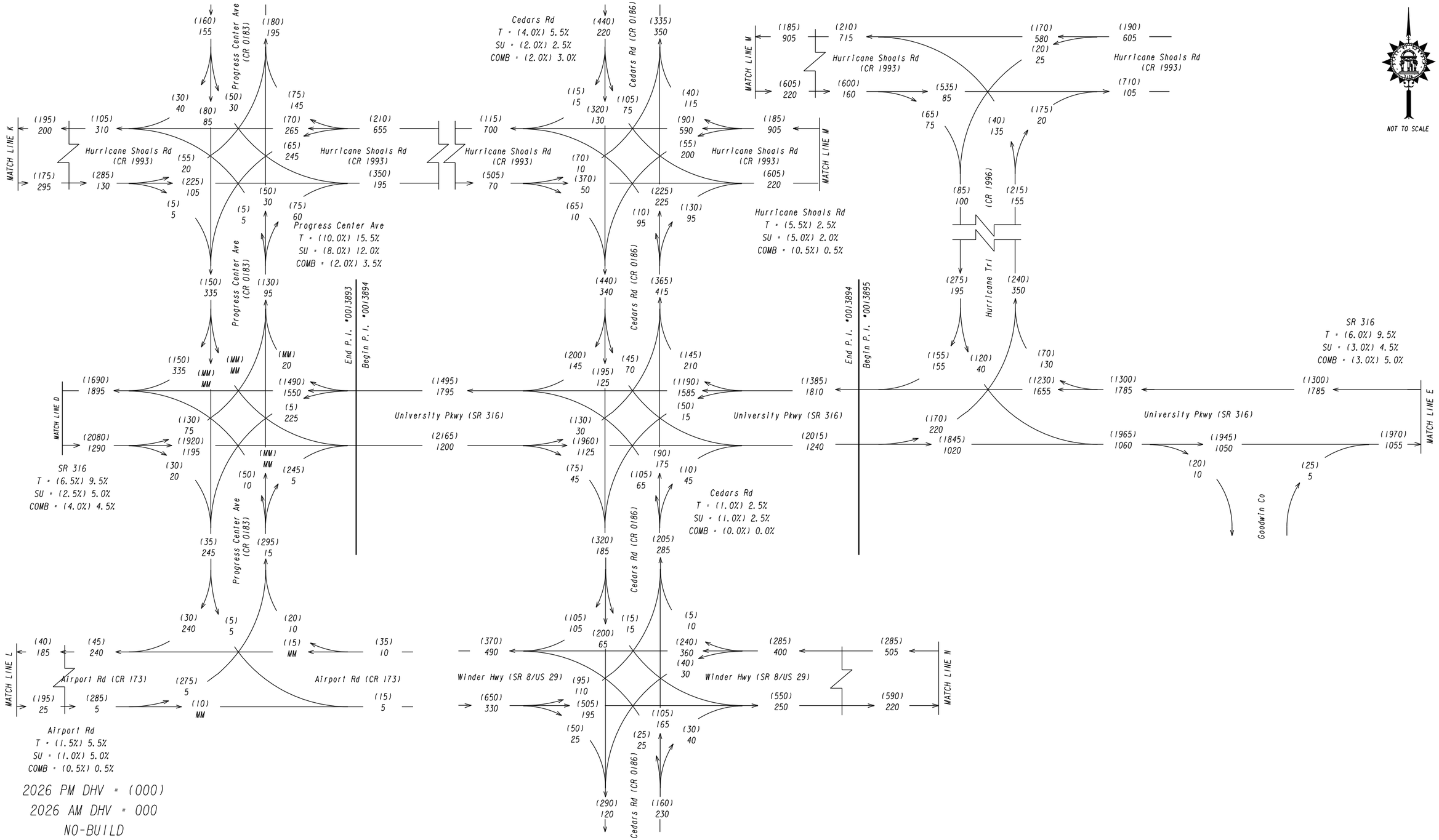

PI#'s 0013893-0013897
GWINNETT COUNTY
STATE ROUTE 316 (SR 316)
FM COLLINS HILL RD
TO DROWNING CREEK RD

2026/2046 FUTURE TRAFFIC DIAGRAMS

GDOT PROGRAM DELIVERY

ATKINS

REVISION DATES		
3-12-18	JRA	
4-25-18	JRA	
12-13-18	JRA	

TRAFFIC DIAGRAM
STATE ROUTE 316 (SR 316)
FM COLLINS HILL RD (CR 104)
TO DROWNING CREEK RD (CR 238)

CHECKED:		DATE:	
BACKCHECKED:		DATE:	
CORRECTED:		DATE:	
VERIFIED:		DATE:	

DRAWING No. 10-0060

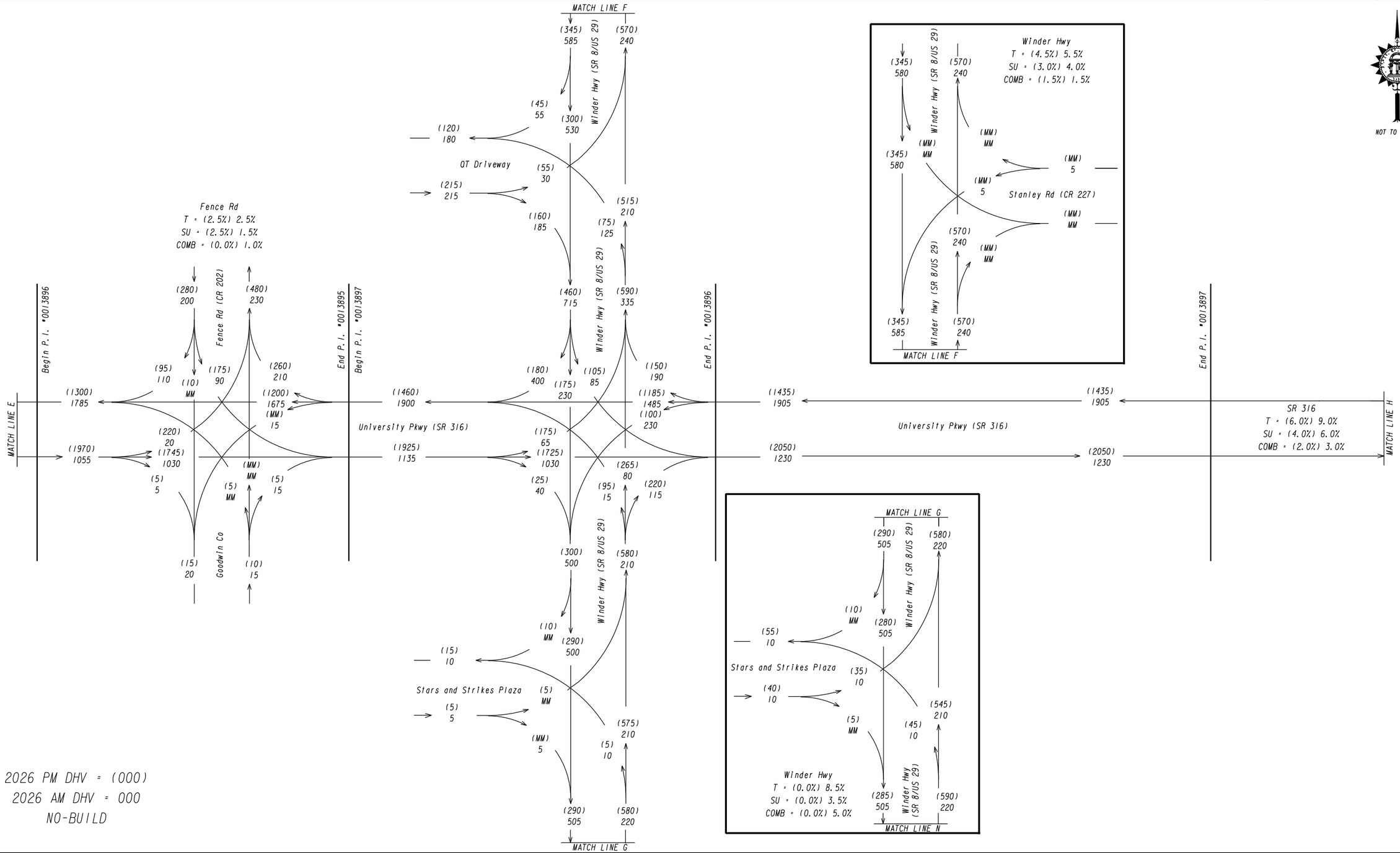

2026 PM DHV = (000)
2026 AM DHV = 000
NO-BUILD

PI#'s 0013893-0013897
GWINNETT COUNTY
STATE ROUTE 316 (SR 316)
FM COLLINS HILL RD
TO DROWNING CREEK RD

2026/2046 FUTURE TRAFFIC DIAGRAMS

PROGRAM DELIVERY

ATKINS

REVISION DATES		
3-12-18	JRA	
4-25-18	JRA	
12-13-18	JRA	

TRAFFIC DIAGRAM
STATE ROUTE 316 (SR 316)
FM COLLINS HILL RD (CR 104)
TO DROWNING CREEK RD (CR 238)

				DRAWING No.
CHECKED:		DATE:		10-0061
BACKCHECKED:		DATE:		
CORRECTED:		DATE:		
VERIFIED:		DATE:		

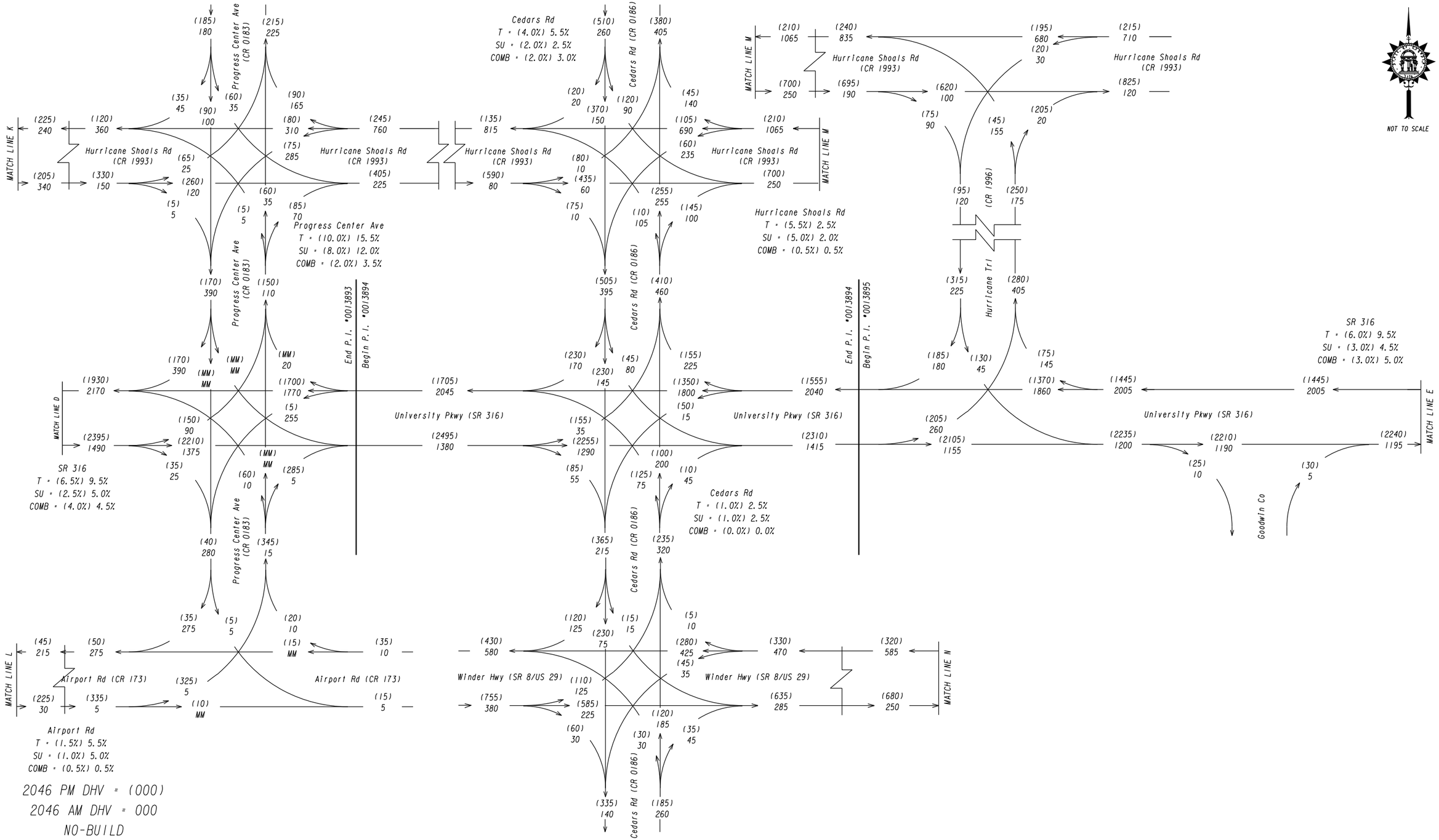

PI#'s 0013893-0013897
GWINNETT COUNTY
STATE ROUTE 316 (SR 316)
FM COLLINS HILL RD
TO DROWNING CREEK RD

2026/2046 FUTURE TRAFFIC DIAGRAMS

GDOT PROGRAM DELIVERY

ATKINS

REVISION DATES		
3-12-18	JRA	
4-25-18	JRA	
12-13-18	JRA	

TRAFFIC DIAGRAM
STATE ROUTE 316 (SR 316)
FM COLLINS HILL RD (CR 104)
TO DROWNING CREEK RD (CR 238)

CHECKED:		DATE:	
BACKCHECKED:		DATE:	
CORRECTED:		DATE:	
VERIFIED:		DATE:	

DRAWING No. 10-0066

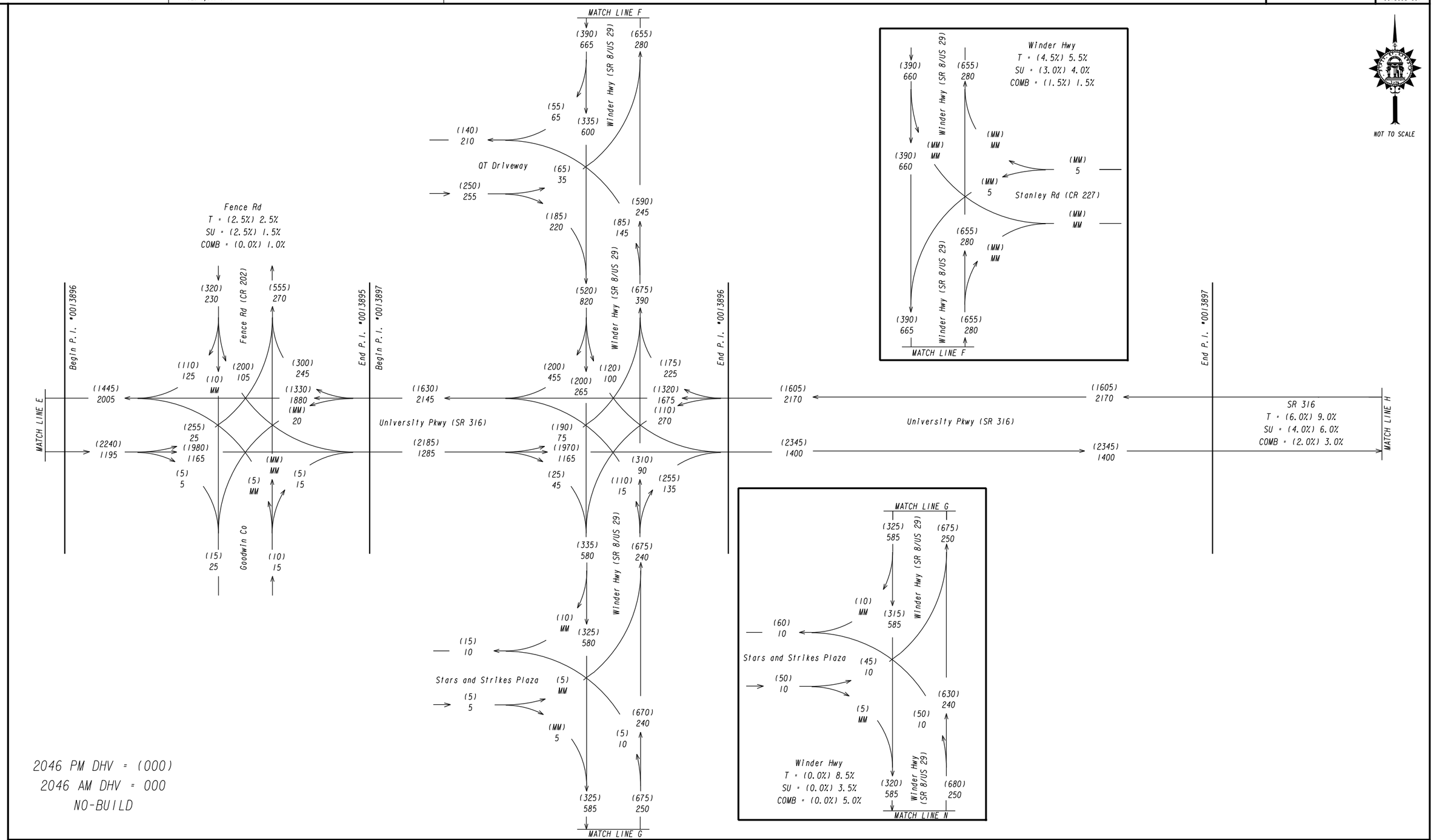

2046 PM DHV = (000)
2046 AM DHV = 000
NO-BUILD

PI#'s 0013893-0013897
GWINNETT COUNTY
STATE ROUTE 316 (SR 316)
FM COLLINS HILL RD
TO DROWNING CREEK RD

2026/2046 FUTURE TRAFFIC DIAGRAMS

PROGRAM DELIVERY

ATKINS

REVISION DATES		
3-12-18	JRA	
4-25-18	JRA	
12-13-18	JRA	

TRAFFIC DIAGRAM
STATE ROUTE 316 (SR 316)
FM COLLINS HILL RD (CR 104)
TO DROWNING CREEK RD (CR 238)

CHECKED:		DATE:	
BACKCHECKED:		DATE:	
CORRECTED:		DATE:	
VERIFIED:		DATE:	

DRAWING No.
10-0067

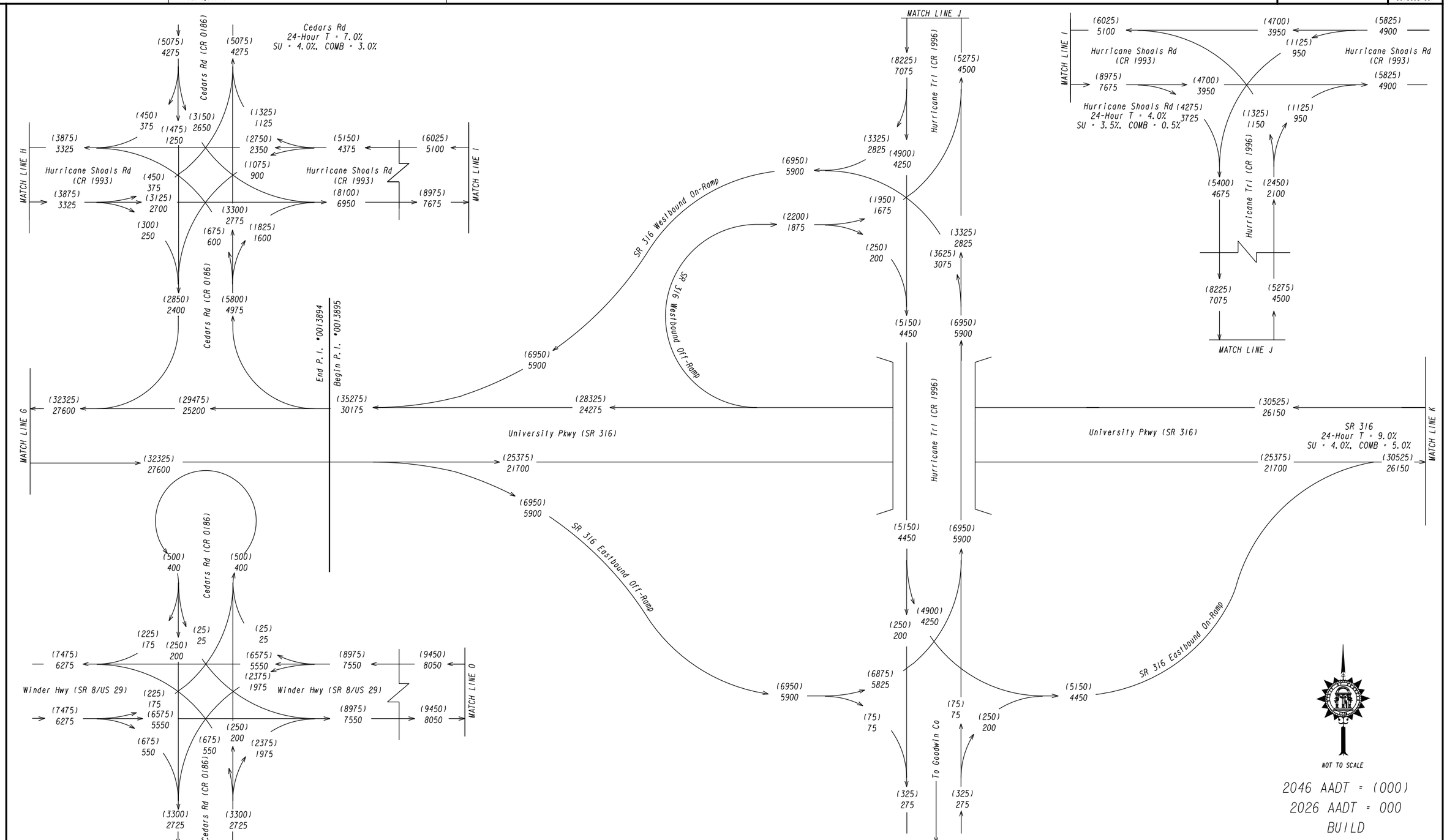

PI#'s 0013893-0013897
GWINNETT COUNTY
STATE ROUTE 316 (SR 316)
FM COLLINS HILL RD
TO DROWNING CREEK RD

2026/2046 FUTURE TRAFFIC DIAGRAMS

GDOT PROGRAM DELIVERY

ATKINS

REVISION DATES		
3-12-18	JRA	
4-25-18	JRA	
12-13-18	JRA	

TRAFFIC DIAGRAM
STATE ROUTE 316 (SR 316)
FM COLLINS HILL RD (CR 104)
TO DROWNING CREEK RD (CR 238)

CHECKED:		DATE:	
BACKCHECKED:		DATE:	
CORRECTED:		DATE:	
VERIFIED:		DATE:	

DRAWING No. 10-0073

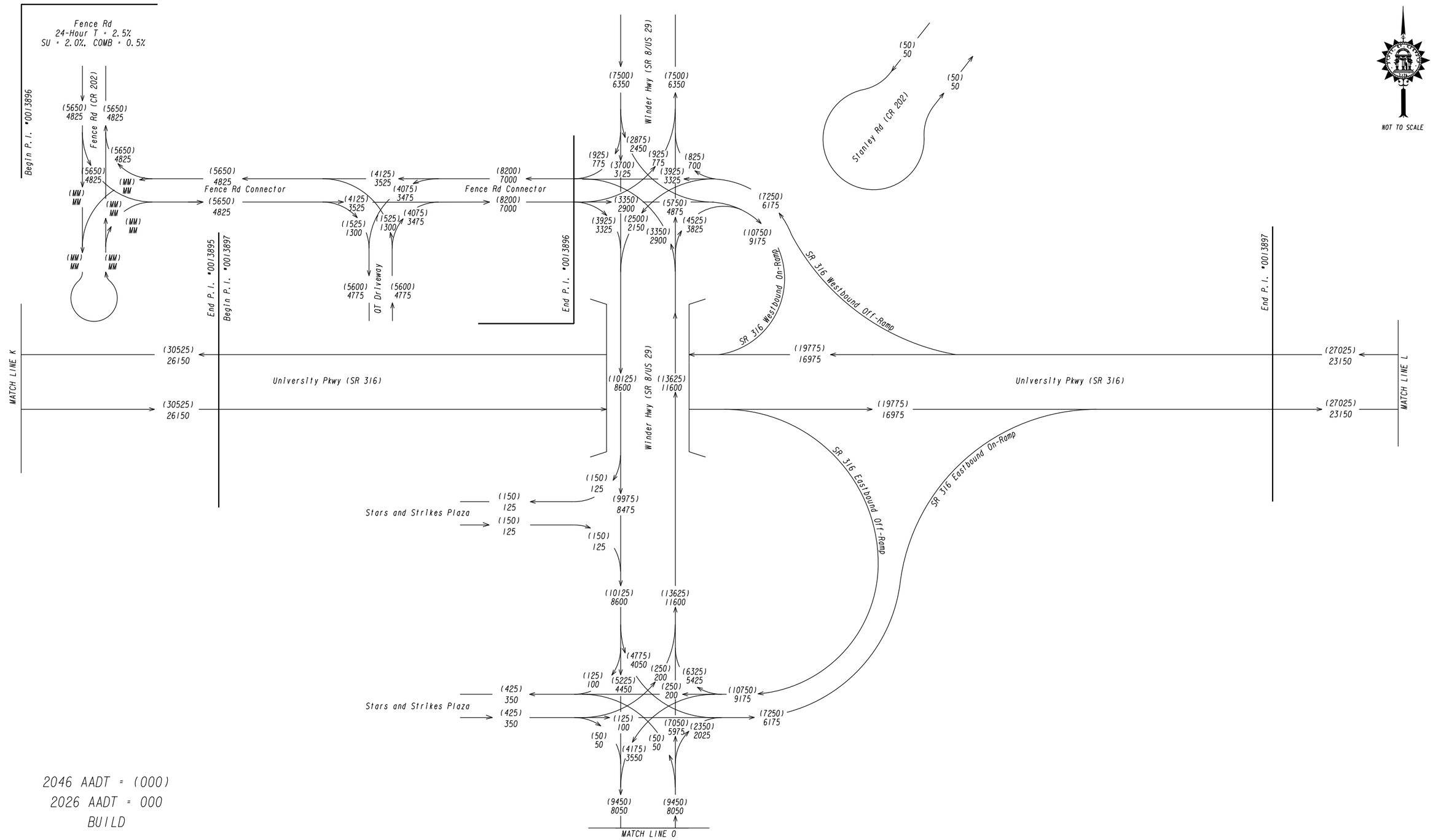

2046 AADT = (000)
2026 AADT = 000
BUILD

PI#'s 0013893-0013897
GWINNETT COUNTY
STATE ROUTE 316 (SR 316)
FM COLLINS HILL RD
TO DROWNING CREEK RD

2026/2046 FUTURE TRAFFIC DIAGRAMS

PROGRAM DELIVERY

ATKINS

REVISION DATES		
3-12-18	JRA	
4-25-18	JRA	
12-13-18	JRA	

TRAFFIC DIAGRAM
STATE ROUTE 316 (SR 316)
FM COLLINS HILL RD (CR 104)
TO DROWNING CREEK RD (CR 238)

CHECKED:		DATE:	
BACKCHECKED:		DATE:	
CORRECTED:		DATE:	
VERIFIED:		DATE:	

DRAWING No.
10-0074

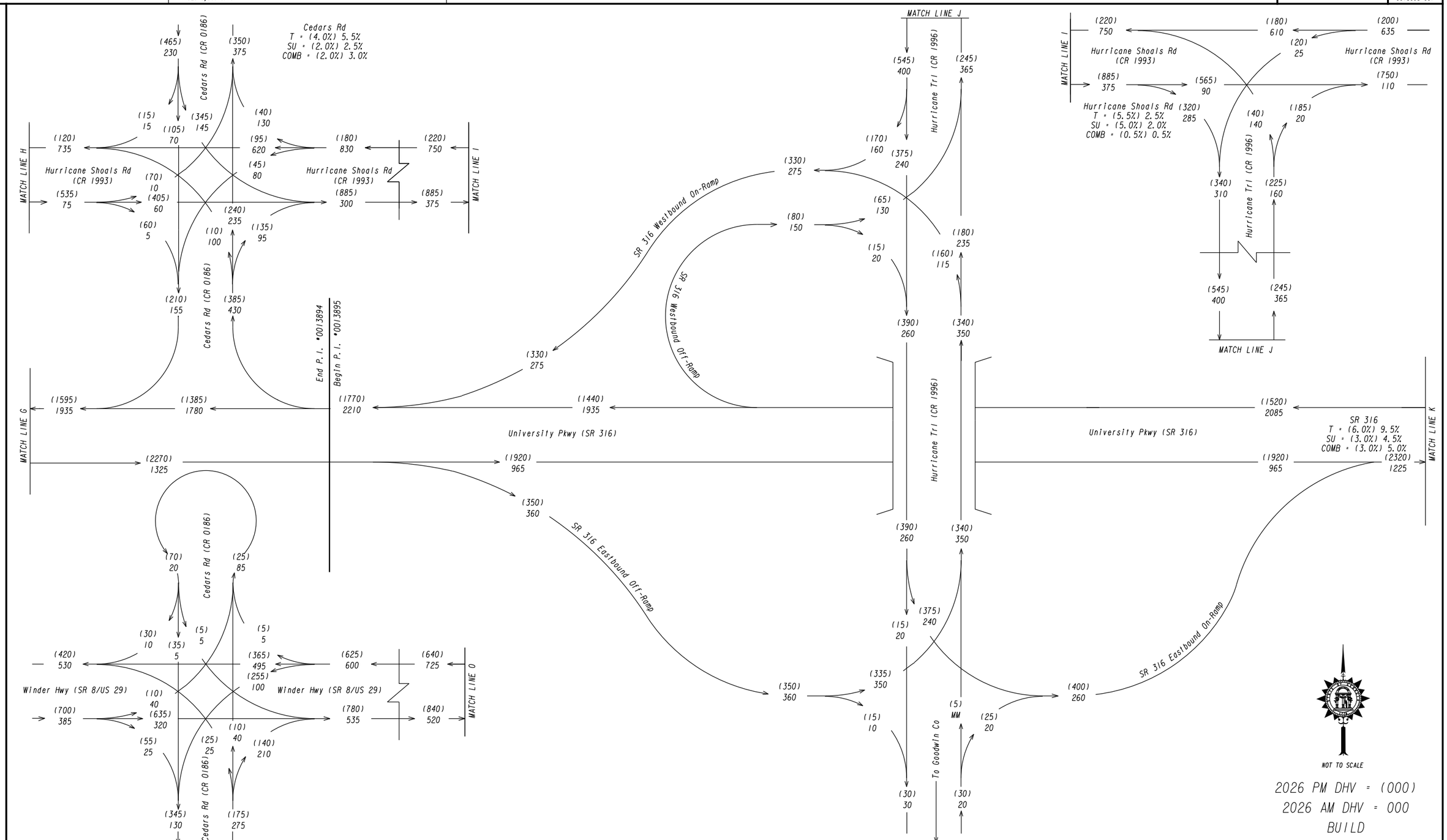

PI#'s 0013893-0013897
GWINNETT COUNTY
STATE ROUTE 316 (SR 316)
FM COLLINS HILL RD
TO DROWNING CREEK RD

2026/2046 FUTURE TRAFFIC DIAGRAMS

GDOT
PROGRAM DELIVERY

ATKINS

REVISION DATES		
3-12-18	JRA	
4-25-18	JRA	
12-13-18	JRA	

TRAFFIC DIAGRAM
STATE ROUTE 316 (SR 316)
FM COLLINS HILL RD (CR 104)
TO DROWNING CREEK RD (CR 238)

CHECKED:		DATE:	
BACKCHECKED:		DATE:	
CORRECTED:		DATE:	
VERIFIED:		DATE:	

DRAWING No. 10-0080

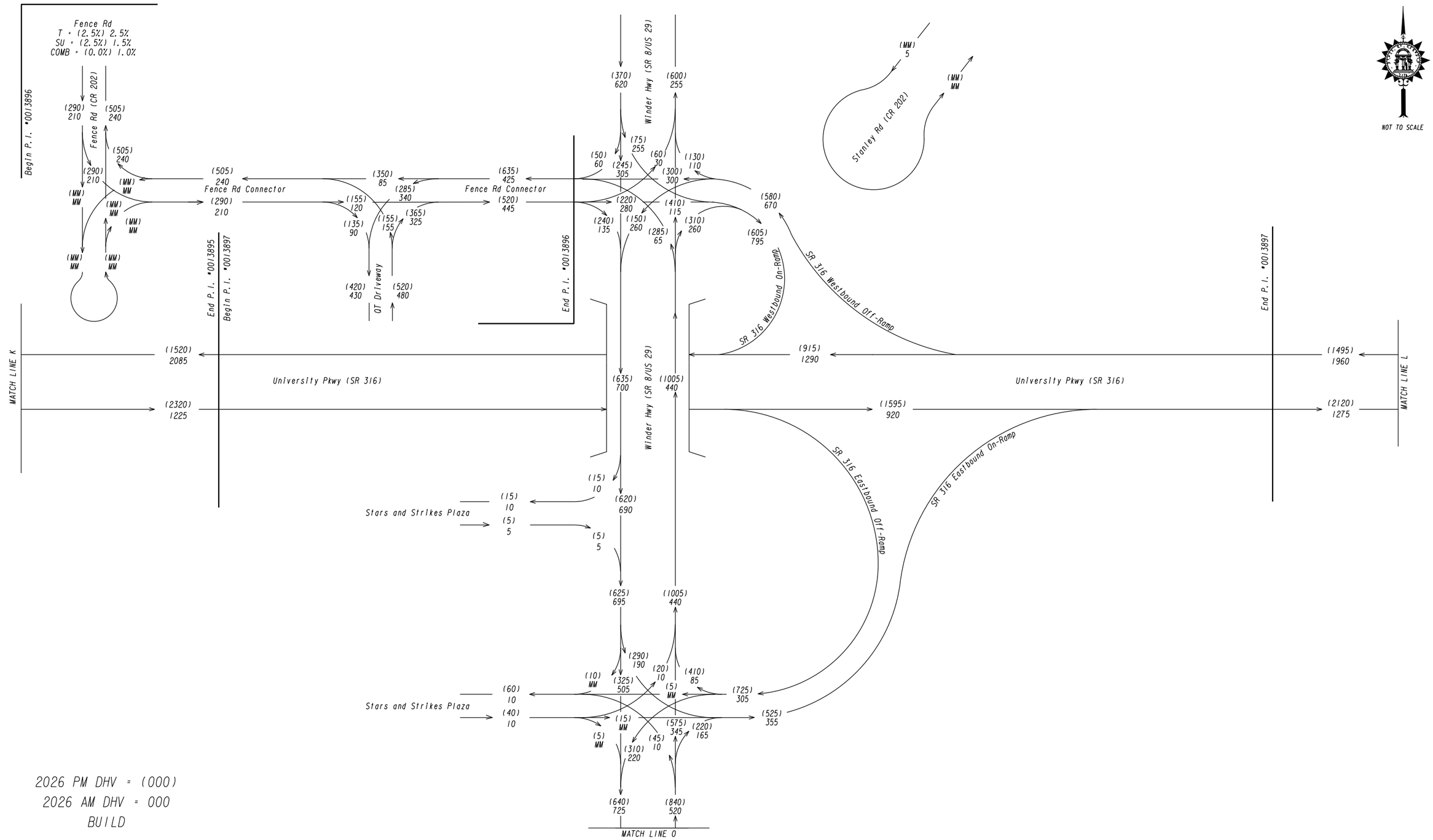

2026 PM DHV = (000)
2026 AM DHV = 000
BUILD

PI#'s 0013893-0013897
GWINNETT COUNTY
STATE ROUTE 316 (SR 316)
FM COLLINS HILL RD
TO DROWNING CREEK RD

2026/2046 FUTURE TRAFFIC DIAGRAMS

PROGRAM DELIVERY

ATKINS

REVISION DATES		
3-12-18	JRA	
4-25-18	JRA	
12-13-18	JRA	

TRAFFIC DIAGRAM
STATE ROUTE 316 (SR 316)
FM COLLINS HILL RD (CR 104)
TO DROWNING CREEK RD (CR 238)

CHECKED:		DATE:	
BACKCHECKED:		DATE:	
CORRECTED:		DATE:	
VERIFIED:		DATE:	

DRAWING No.
10-0081

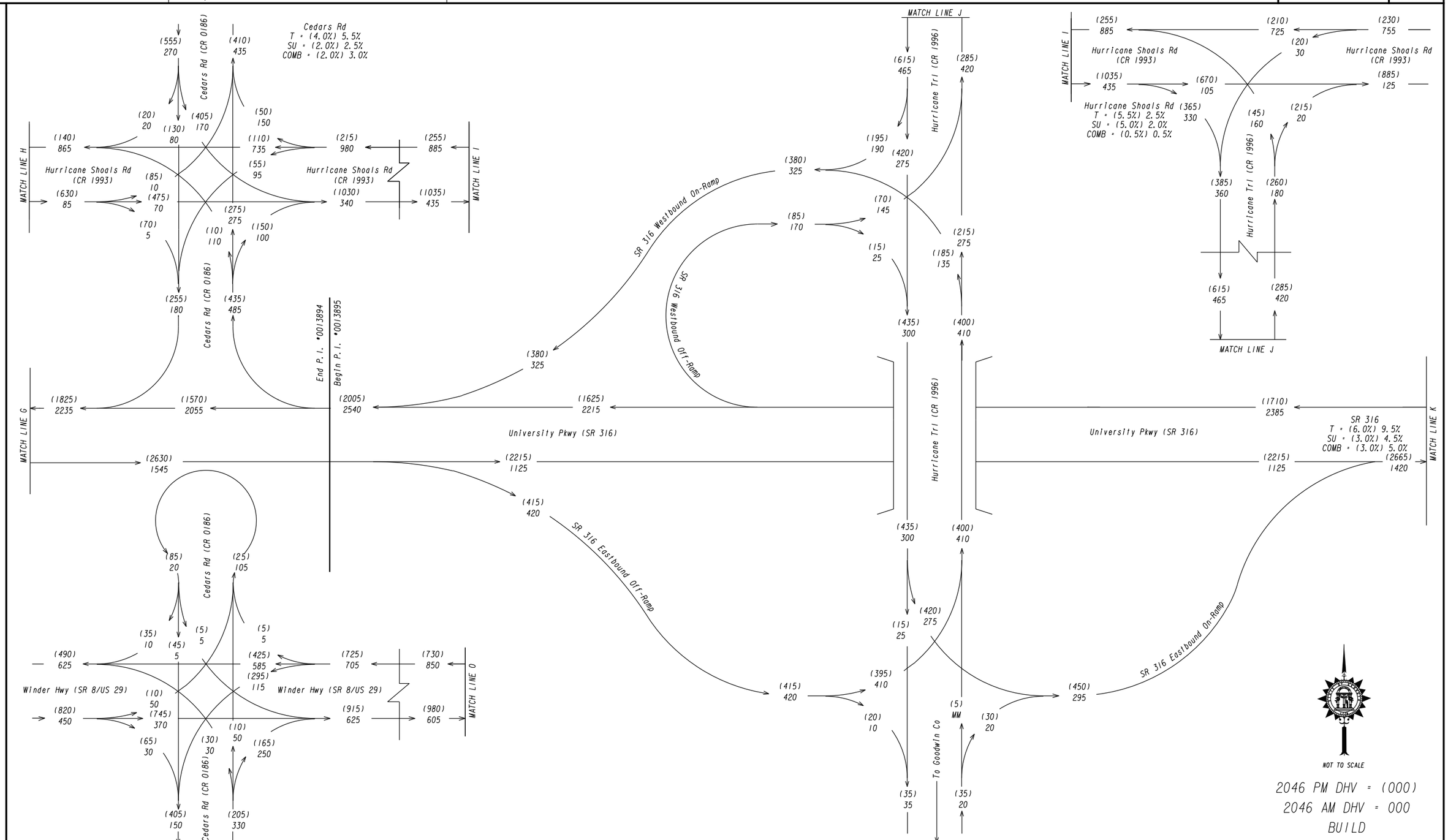

PI#'s 0013893-0013897
GWINNETT COUNTY
STATE ROUTE 316 (SR 316)
FM COLLINS HILL RD
TO DROWNING CREEK RD

2026/2046 FUTURE TRAFFIC DIAGRAMS

GDOT
PROGRAM DELIVERY

ATKINS

REVISION DATES		
3-12-18	JRA	
4-25-18	JRA	
12-13-18	JRA	

TRAFFIC DIAGRAM
STATE ROUTE 316 (SR 316)
FM COLLINS HILL RD (CR 104)
TO DROWNING CREEK RD (CR 238)

CHECKED:		DATE:	
BACKCHECKED:		DATE:	
CORRECTED:		DATE:	
VERIFIED:		DATE:	

DRAWING No.
10-0087

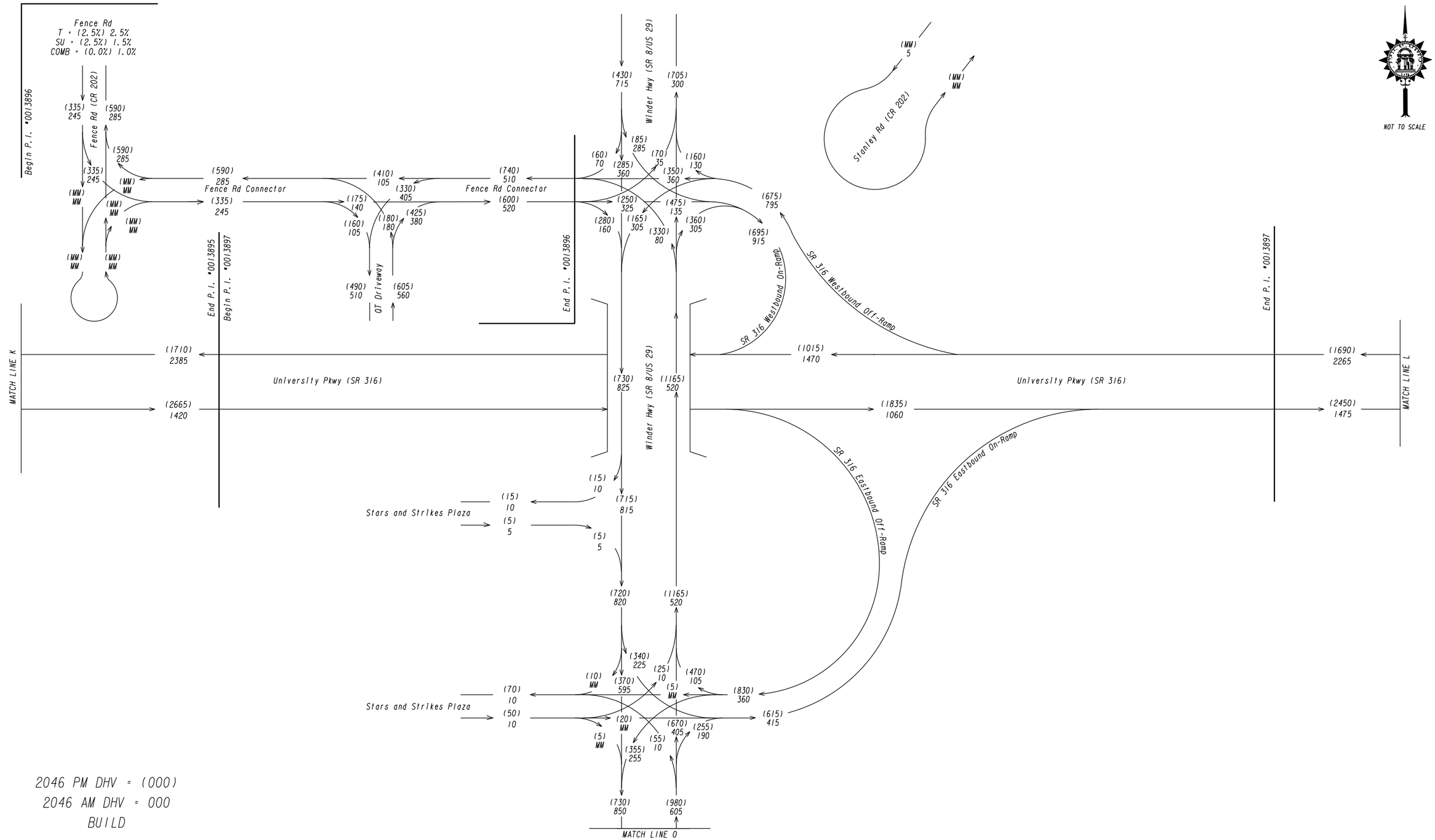

2046 PM DHV = (000)
2046 AM DHV = 000
BUILD

PI#'s 0013893-0013897
GWINNETT COUNTY
STATE ROUTE 316 (SR 316)
FM COLLINS HILL RD
TO DROWNING CREEK RD

2026/2046 FUTURE TRAFFIC DIAGRAMS

PROGRAM DELIVERY

ATKINS

REVISION DATES		
3-12-18	JRA	
4-25-18	JRA	
12-13-18	JRA	

TRAFFIC DIAGRAM
STATE ROUTE 316 (SR 316)
FM COLLINS HILL RD (CR 104)
TO DROWNING CREEK RD (CR 238)

CHECKED:		DATE:	
BACKCHECKED:		DATE:	
CORRECTED:		DATE:	
VERIFIED:		DATE:	

DRAWING No.
10-0088

Attachment 8

Capacity Analysis Summary

ATKINS

Intersection Capacity Analysis

for

SR 316 from east of Cedars Road to west of Sugarloaf Parkway

PI Nos. 0013895-97

July 31, 2019

Intersection	No Build Levels of Service (LOS)			
	2024		2044	
	AM	PM	AM	PM
SR 316 at Hurricane Trail (Signalized)	A	B	A	B
SR 316 at Winder Highway (Signalized)	D	D	E	D
Hurricane Shoals Road at Hurricane Trail (Unsignalized)	C	C	F	D

Notes:

1) LOS analysis based on CORSIM (version 6.3) output and HCM criteria

Intersection	Build Levels of Service (LOS)			
	2024		2044	
	AM	PM	AM	PM
SR 316 eastbound at Hurricane Trail (Signalized)	C	C	C	C
SR 316 westbound at Hurricane Trail (Signalized)	C	B	B	B
SR 316 eastbound at Winder Highway (Signalized)	B	C	B	C
SR 316 westbound at Winder Highway (Signalized)	C	A	C	A
Hurricane Shoals Road at Hurricane Trail (Signalized)	A	A	A	B

Notes:

1) LOS analysis based on CORSIM (version 6.3) outputs and HCM criteria

2) Build traffic volumes increased due to diverted traffic from Cedars Road (partial closure to SR 316 per PI 0013894) and Progress Center Road (full closure to SR 316 per PI 0013893)

3) Existing at grade intersection becomes two at grade intersections with SR 316 ramps on Hurricane Trail and Winder Highway

Attachment 9

Signal Warrant Analysis

ATKINS

Summary of Signal Warrant Analysis

For

SR 316 from east of Cedars Road to west of Sugarloaf Parkway

PI Nos. 0013895-97

July 31, 2019

Signal warrant analyses was performed to evaluate the need for signalization based on the opening year (2024) forecasted traffic volumes approved by GDOT Office of Planning. A separate Traffic Engineering Study will be submitted for signal permitting.

HURRICANE TRAIL ROAD

Intersection	Warrant 1 (Eight-Hour Veh. Volumes)		Warrant 2 (Four-Hour Veh. Volumes)
	A	B	
Hurricane Shoals at Hurricane Trail*	Yes	No	Yes
SR 316 eastbound at Hurricane Trail**	No	No	No
SR 316 westbound at Hurricane Trail	Yes	No	Yes

* Traffic was added to account for the new 101,000 square feet warehouse and distribution center under construction just north of the intersection and adjacent to Hurricane Shoals Road. Based on ITE trip generation, the warehouse and distribution center will add 1,600 additional daily trips.

** Traffic signal warrants are not met; however, Hurricane Trail has 19 percent trucks and provides direct connectivity to Goodwin Ammonia Company, Yancey Brothers and Publix Distribution. Therefore, traffic signalization is preferred and recommended for truck mobility accessing the industrial/commercial facilities along Hurricane Trail and Hurricane Shoals Road

WINDER HIGHWAY

Intersection	Warrant 1 (Eight-Hour Veh. Volumes)		Warrant 2 (Four-Hour Veh. Volumes)
	A	B	
SR 316 eastbound at Winder Highway	Yes	Yes	Yes
SR 316 westbound at Winder Highway	Yes	Yes	Yes

Attachment 10

ICE Reports

GDOT ICE STAGE 1: SCREENING DECISION RECORD

ICE Version 2.15 | Revised 07/01/2019

GDOT PI #	0013895-97
Project Location:	Hurricane Shls @ Hurricane Trl
Existing Control:	Conventional (Minor Stop)
Prepared by:	Atkins
Date:	7/31/2019

Answer "Yes" or "No" to each policy question for each control type to identify which alternatives should be evaluated in the Stage 2 Decision Record; enter justification in the rightmost column

Note: Up to 5 alternatives may be selected and evaluated; Use this ICE Stage 1 to screen 5 or fewer alternatives to evaluate in Stage 2

	Intersection Alternative (see "Intersections" tab for detailed description of intersection/interchange type)	1. Does alternative address the project need in a balanced manner and in scale with the project?	2. Does alternative improve safety performance in terms of reducing severe crashes?	3. Does alternative incorporate safety, convenience and accessibility for pedestrians and/or bicyclists?	4. Does alternative improve (or preserve) traffic operations (congestion, delay, reliability, etc.)?	5. Does alternative appear feasible given the site characteristics, constrains & location context?	6. Does alternative appear feasible with respect to other project factors?	7. Overall feasible alternative (select alternative for further evaluation in Stage 2)?	**Screening Decision Justification:**
Unsignalized Intersections	Conventional (Minor Stop)	No	No	No	No	No	No	No	Existing condition
	Conventional (All-Way Stop)	No	No	No	No	No	No	No	Warrant not met
	Mini Roundabout	No	No	No	No	No	No	No	Truck traffic
	Single Lane Roundabout	**Yes**	**Yes**	**Yes**	**Yes**	**Yes**	**Yes**	**Yes**	Consider for Stage 2
	Multilane Roundabout	No	No	No	No	No	No	No	Two lane highway
	RCUT (stop control)	No	No	No	No	No	No	No	Mainline does not have median for U-Turn
	RIRO w/down stream U-Turn	No	No	No	No	No	No	No	Mainline does not have median for U-Turn
	High-T (unsignalized)	No	No	No	No	No	No	No	Intersection warrants signal
	Offset-T Intersections	No	No	No	No	No	No	No	Three-leg intersection
	Diamond Interch (Stop Control)	No	No	No	No	No	No	No	Not an interchange
	Diamond Interch (RAB Control)	No	No	No	No	No	No	No	Not an interchange
	No LT Lane Improvements No RT Lane Improvements	No	No	No	No	No	No	No	NA
	Other unsignalized (provide description):	No	No	No	No	No	No	No	NA
Signalized Intersections	Traffic Signal	**Yes**	**Yes**	**Yes**	**Yes**	**Yes**	**Yes**	**Yes**	Consider for Stage 2
	Median U-Turn (Indirect Left)	No	No	No	No	No	No	No	Signal not warranted; Mainline does not have median for U-Turn
	RCUT (signalized)	No	No	No	No	No	No	No	Signal not warranted; Mainline does not have median for U-Turn
	Displaced Left Turn (CFI)	No	No	No	No	No	No	No	Signal not warranted
	Continuous Green-T	**Yes**	**Yes**	**No**	**Yes**	**Yes**	**Yes**	**Yes**	Consider for Stage 2
	Jughandle	No	No	No	No	No	No	No	Signal not warranted; ROW constraints
	Quadrant Roadway	No	No	No	No	No	No	No	Signal not warranted; ROW constraints
	Diamond Interch (Signal Control)	No	No	No	No	No	No	No	Not an interchange
	Diverging Diamond	No	No	No	No	No	No	No	Not an interchange
	Single Point Interchange	No	No	No	No	No	No	No	Not an interchange
	No LT Lane Improvements No RT Lane Improvements	No	No	No	No	No	No	No	NA
	Other Signalized (provide description):	No	No	No	No	No	No	No	NA

= Intersection type selected for more detailed analysis in Stage 2 Alternative Selection Decision Record

GDOT ICE STAGE 2: ALTERNATIVE SELECTION DECISION RECORD

ICE Version 2.15 | Revised 07/01/2019

GDOT PI # (or N/A)	0013895-97	GDOT District:	1 - Gainesville	Date:	7/31/2019
County:	Gwinnett	Area Type:	Suburb/Transition	Agency/Firm:	Atkins
Project Location:	Hurricane Shls @ Hurricane Trl			Analyst:	ZH
Existing Intersection Control:	Conventional (Minor Stop)			Type of Analysis:	Conventional Non-Safety Funded Project

Opening / Design Year Traffic Operations

Intersection meets signal/AWS warrants?	Meets Signal Warrants	
Traffic Analysis Measure of Effectiveness	Intersection Delay	
Traffic Analysis Software Used	Synchro 10	
Analysis Time Period	AM Peak Hr	PM Peak Hr
2024 Opening Yr No-Build Peak Hr Intersection Delay	5.5 sec	4.9 sec
2024 Opening Yr No-Build Peak Hr Intersection V/C	0.57	0.52
2044 Design Yr No-Build Peak Hr Intersection Delay	10.0 sec	7.1 sec
2044 Design Yr No-Build Peak Hr Intersection V/C ratio	0.80	0.69

Complete Streets Warrants Met?

- ☐ PEDESTRIANS
- ☐ BICYCLES
- ☐ TRANSIT

Crash Data: Enter most recent 5 years of crash data (Crash Type)	Crash Severity: PDO	Injury Crash*	Fatal Crash*	
Angle	12	7	0	36%
Head-On	1	1	0	4%
Rear End	13	2	0	28%
Sideswipe - same	2	0	0	4%
Sideswipe - opposite	1	0	0	2%
Not Collision w/Motor Veh	11	3	0	26%
TOTALS:	40	13	0	53

* Number of crashes resulting in injuries / fatalities, not number of persons

Alternatives Analysis:	Alternative 1		Alternative 2		Alternative 3		Alternative 4	Alternative 5
Proposed Control Type/Improvement:	Single Lane Roundabout		Traffic Signal		Continuous Green-T		N/A	N/A
Project Cost: (From CostEst Worksheet)	*Additional description here*		*Add LT bays all approaches*		*Additional description here*			
Construction Cost	$3,500,000		$100,000		$2,000,000			
ROW Cost	$750,000		$50,000		$750,000			
Environmental Cost	$200,000		$25,000		$200,000			
Reimbursable Utility Cost	$500,000		$25,000		$500,000			
Design & Contingency Cost	$500,000		$25,000		$500,000			
Cost Adjustment (justification req'd)								
Total Cost	$5,450,000		$225,000		$3,950,000			
Traffic Operations:								
Traffic Analysis Software Used	SIDRA 7		Synchro 10		Synchro 10			
Analysis Period	AM Peak Hr	PM Peak Hr	AM Peak Hr	PM Peak Hr	AM Peak Hr	PM Peak Hr		
2044 Design Yr Build Intersection Delay	8.9 sec	14.4 sec	12.5 sec	8.7 sec	9.6 sec	7.7 sec		
2044 Design Yr Build Intersection V/C	0.65	0.82	0.59	0.55	0.53	0.52		
Safety Analysis:								
Predefined CRF: PDO	39%		39%		39%			
Predefined CRF: Fatal/Inj	78%		40%		49%			
Predefined CRF Source:	FHWA Clearinghouse #s 233 / 234		FHWA Clearinghouse #s 325 / 7984		FHWA Clearinghouse #s 7982/8655 / 7984/8656			
User Defined CRF: PDO								
User Defined CRF: Fatal/Inj								
User Defined CRF Source (write in if applicable):								
Environmental Impacts:[1]								
Historic District/Property	None		None		None			
Archaeology Resources	None		None		None			
Graveyard	None		None		None			
Stream	None		None		None			
Underground Tank/Hazmat	None		None		None			
Park Land	None		None		None			
EJ Community	None		None		None			
Wooded Area	None		None		None			
Wetland	None		None		None			
Stakeholder Posture:	*Note: If environmental impact is significant (RED), provide justification impact won't jeopardize project delivery using "Env" worksheet* [1] *Environmental impacts are only preliminary estimates; detailed environmental impact documentation will be included with project concept report*							
Local Community Support	Neutral		Neutral		Neutral			
GDOT Support	Neutral		Neutral		Neutral			
Final ICE Stage 2 Score:	6.0		5.7		5.1			
Rank of Control Type Alternatives:	1		2		3			

Note: Stage 2 score is not given (shown as "-") if signal or AWS is selected as control type but respective warrants are not met

Provide additional comments and/or explain any unique analysis inputs, or results (as necessary):

GDOT Intersection Control Evaluation (ICE) Stage 2 Analysis Computation Sheet

ICE Version 2.15 | Revised 07/01/2019

Cost Estimates:	Single Lane Roundabout	Traffic Signal	Continuous Green-T	N/A	N/A
	$5,450,000	$225,000	$3,950,000	$0	$0
Avg of Cost Estimates:	$3,208,333				
<50% of Avg Costs:	$ 1,604,167	10 pts			
>200% of Avg Costs:	> $ 6,416,667	0 pts			
Cost Score:	2.01	10.00	5.13	0.00	0.00
Operations:					
Delay & V/C	Intersection Delay (50%)			V/C Ratio (50%)	
Min Delay:	0.0	10 pts	Min V/C:	0.25	10 pts
Worst Operations:	80.0	0 pts	Max Capacity	1.00	0 pts
Max Delay:	240.0	-10 pts	Max V/C:	2.00	-10 pts
Delay Score (Avg AM/PM):	8.53	0.00	0.00	0.00	0.00
V/C Score (Avg AM/PM):	3.53	5.73	6.33	0.00	0.00
Delay, V/C Ops Score:	6.03	2.87	3.17	0.00	0.00
Network Delay (avg AM/PM)	11.8	0.0	0.0	0.00	0.0
Average of Network Delay:	11.77				
<50% of Avg Network Delay:	5.9	10 pts			
>200% of Avg Network Delay:	23.5	0 pts			
Network Ops Score:	6.67	0.00	0.00	0.00	0.00
Safety:					
CRF ID Look-Up:	104	112	116	100	100
CMF Source:	FHWA Clearinghouse	FHWA Clearinghouse	FHWA Clearinghouse	0	0
CMF Clearinghouse ID_{PDO}	233	325	7982/8655	0	0
CMF Clearhouse $ID_{FATAL/INJ}$	234	7984	7984/8656	0	0
Clearinghouse CRF_{PDO}	0.39	0.39	0.39	0.00	0.00
Clearinghouse $CRF_{FATAL/INJ}$	0.78	0.40	0.49	0.00	0.00
Used CRF_{PDO}	0.39	0.39	0.39		
Used $CRF_{FATAL/INJ}$	0.78	0.40	0.49		
Weighted Crash Remain:	23.0	47.9	41.5		
Total Weighted Crashes:	89.3	0 pts			
No crashes:	0.0	10 pts			
Safety Score:	7.43	4.64	5.35	0.00	0.00

Environmental:	Single Lane Roundabout	Traffic Signal	Continuous Green-T	N/A	N/A
Historic	0	0	0		
Archaeology	0	0	0		
Graveyard	0	0	0		
Stream	0	0	0		
UST/Hazmat	0	0	0		
Park Land	0	0	0		
EJ Community	0	0	0		
Wooded Area	0	0	0		
Wetland	0	0	0		
Environmental Score:	10.0	10.0	10.0		
Project Support:					
Local Citizen Support	5	5	5		
GDOT Central Support	5	5	5		
Project Support Score:	5.0	5.0	5.0		

Evaluation Criteria Totals:	Single Lane Roundabout	Traffic Signal	Continuous Green-T
Cost Estimates - 20%	0.40	2.00	1.03
Operations - 32%	1.93	0.92	1.01
Safety - 33%	2.45	1.53	1.76
Environmental -10%	1.00	1.00	1.00
Project Support - 5%	0.25	0.25	0.25
Total Score:	**6.03**	**5.70**	**5.05**

Total Crashes by Severity:	**Correctable Crashes by Alternative**				
PDO: 40	40	40	40		
Injury: 13	13	13	13		
Fatal: 0	0	0	0		
Benefit / Cost:					
Annual Cost	$494,150	$39,575	$363,650	$0	$0
Annual Operations Benefit	-$16,194	-$17,986	-$2,336	$0	$0
Annual Safety Benefit:	$2,022,930	$1,075,538	$1,307,347	$0	$0
Operations B/C Ratio:	-0.03	-0.45	-0.01	-	-
Safety B/C Ratio:	4.1	27.2	3.6	-	-
Weighted B/C (50% Safety)	2.0	13.4	1.8	-	-

Intersection Evaluation

Hurricane Shoals Road at Hurricane Trail Road

November 5, 2019

Atkins evaluated the intersection on Hurricane Shoals Road at Hurricane Trail Road as part of the new interchange on SR 316 at Hurricane Trail. Atkins completed the Intersection Control Evaluation (ICE) using GDOT's ICE Tool. Three alternatives were chosen from the Stage 1 ICE analysis: Single Lane Roundabout, Continuous Green T(Signalized), and Traffic Signal. The Stage 2 ICE recommended a roundabout for the intersection with a score of 6.0 and the traffic signal was second with a score of 5.7. However, additional traffic analysis was completed to compare the operations of the roundabout and traffic signal alternatives and is shown below.

	2044 AM		2044 PM	
Alternative	**Delay**	**LOS**	**Delay**	**LOS**
Single Lane Roundabout	8.9	A	14.4	B
Traffic Signals	12.5	B	8.7	A

Atkins also developed advantages and disadvantages for the roundabout and traffic signal based on a conceptual layout for the roundabout and traffic signal.

Roundabout	
Advantages	***Disadvantages***
Reduce potential for angle collisions (36% of total crashes)	2.0 Benefit/Cost Ratio
Reduce potential for rear end collisions (28% of total crashes)	$3 Million increase in CST costs
Lowers travel speeds thru intersection	Operates at same LOS as Traffic Signal
	Modifies Publix Distribution Driveway (500 linear feet of impacts onto Publix property)
	Requires truck bypass lane on east approach
	$500,000 increase in ROW costs
	Future development might warrant for multi-lane roundabout

Traffic Signal	
Advantages	***Disadvantages***
13.4 Benefit/Cost Ratio	Potential for angle collisions- mitigate with turn lanes and left turn signalization
Operates at same LOS as Roundabout	
Retains Publix Driveway configuration	
Left turn lanes reduce potential for rear end collisions (28% of total crashes)	
Allows trucks from new development to turn without circular movement around roundabout center island	

GDOT INTERSECTION CONTROL EVALUATION (ICE) WAIVER FORM

ICE Version 2.15 | Revised 07/01/2019

Waiver Request - Level 1

In certain circumstances where an ICE would otherwise be required, an ICE may be waived based on appropriate evidence presented with a written request. Scenarios in which an ICE waiver request may be considered include:

1. Proposed improvements do not substantially alter the character of the intersection, and are considered minor in nature, such as extending existing turn lane(s) or modifying signal phasing at an existing traffic signal
2. The intersection consists of a public roadway intersecting a divided, multilane roadway where the access will be limited to a closed median with only right-in/right-out access that will operate acceptably; or
3. The intersection is along an undivided, two-lane roadway that will not be widened and meets the following criteria:
   - Low risk in terms of exposure (total intersection entering volume less than 1,000 vehicles /day)
   - Latest 5 years of crash history is not indicative of a crash problem (no discernible crash patterns coupled with low crash frequency and severity)
   - Layout has no unusual or undesirable geometric features (such as restricted sight distance)
   - The proposed changes are not expected to adversely affect safety

If only one alternative is determined to be feasible from the ICE Stage 1, then a waiver may be submitted in lieu of completing ICE Stage 2. The waiver must clearly explain why there is no other feasible alternative. A Waiver Form should also be submitted to document an agreed upon decision to select a preferred alternative other than the highest scoring alternative in Stage 2.

ICE waiver forms with supporting documentation should be submitted for approval to the Office of Traffic Operations or District Engineer (depending on Waiver level). Questions regarding the waiver process should be routed to the State Traffic Engineer.

Project Information:

Location:	Hurricane Shls @ Hurricane Trl	GDOT PI # (or N/A):	0013895-97
County:	Gwinnett	Requested By:	GDOT
GDOT District:	1 - Gainesville	Prepared By:	Atkins
Area Type:	Suburb/Transition	Analyst:	ZH
Existing Intersection Control:	Conventional (Minor Stop)	Date:	7/31/2019
		Waiver Request Type:	GDOT PDP Project

Traffic and Operations Data:[1]

Intersection meets signal/AWS warrants?	Meets Signal Warrants	
Traffic Analysis Type:	Intersection Delay	
Existing Avg Daily Traffic (Major Street):	4,463	
Existing Avg Daily Traffic (Minor Street):	1,875	
Analysis Period:	AM Peak	PM Peak
2024 Opening Yr Peak Hour Intersection Delay:	5.5 sec	4.9 sec
2024 Opening Yr Peak Hour Intersection V/C:	0.57	0.52
2044 Design Yr Peak Hour Intersection Delay:	10.0 sec	7.1 sec
2044 Design Yr Peak Hour Intersection V/C:	0.80	0.69

[1]Crash data required for all existing intersections. ADT's required if available (from data collected or nearest GDOT count station site). Capacity data is optional unless needed to justify basis of the waiver request.

Crash Data (Required):[1]

Crash Type	Crash Data: Enter most recent 5 years of crash data	Crash Severity: PDO	Injury Crash*	Fatal Crash*
	Angle	12	7	0 <-
	Head-On	1	1	0
	Rear End	13	2	0
	Sideswipe - same	2	0	0
	Sideswipe - opposite	1	0	0
	Not Collision w/Motor Veh	11	3	0
	TOTALS:	**40**	**13**	**0**

* Number of crashes resulting in injuries / fatalities, not number of persons

Description of Work / Justification for Waiver (Required):	The proposed traffic signal (#2 per Stage 2 ICE) operates at the same Level of Service as roundabout alternative, and the traffic signal has a b/c ratio of 13.4 compared to 2.0 for the roundabout. Therefore, the traffic signal is the preferred intersection improvement based on practical design (b/c ratios), and left turn lanes with protected left signal phasing will be provided to reduce the potential for collisions.
Proposed Intersection Control:	Traffic Signal

REQUESTED BY: Scott Shelton Date: 11/7/2019

Title: Senior Project Manager

APPROVED BY: Date: 12/2/19

Name: ANDREW HEATH

Chief Engineer or (Approved Delegate)

GDOT ICE STAGE 1: SCREENING DECISION RECORD

ICE Version 2.15 | Revised 07/01/2019

GDOT PI #	0013895-97
Project Location:	SR 316 Ramps @ Hurricane Trl
Existing Control:	Signal (turn lanes on mainline)
Prepared by:	Atkins
Date:	7/31/2019

Answer "Yes" or "No" to each policy question for each control type to identify which alternatives should be evaluated in the Stage 2 Decision Record; enter justification in the rightmost column

Note: Up to 5 alternatives may be selected and evaluated; Use this ICE Stage 1 to screen 5 or fewer alternatives to evaluate in Stage 2

	Intersection Alternative (see "Intersections" tab for detailed description of intersection/interchange type)	1. Does alternative address the project need in a balanced manner and in scale with the project?	2. Does alternative improve safety performance in terms of reducing severe crashes?	3. Does alternative incorporate safety, convenience and accessibility for pedestrians and/or bicyclists?	4. Does alternative improve (or preserve) traffic operations (congestion, delay, reliability, etc.)?	5. Does alternative appear feasible given the site characteristics, constrains & location context?	6. Does alternative appear feasible with respect to other project factors?	7. Overall feasible alternative (select alternative for further evaluation in Stage 2)?	**Screening Decision Justification:**
Unsignalized Intersections	Conventional (Minor Stop)	No	No	No	No	No	No	No	Existing signalized intersection
	Conventional (All-Way Stop)	No	No	No	No	No	No	No	SR316 volumes too high for stop control
	Mini Roundabout	No	No	No	No	No	No	No	Multilane roadways
	Single Lane Roundabout	No	No	No	No	No	No	No	Multilane roadways
	Multilane Roundabout	No	**Yes**	**Yes**	No	No	No	No	Existing high volumes and long queues on SR316
	RCUT (stop control)	No	No	No	No	No	No	No	High U-turn truck traffic and opposing through volumes
	RIRO w/down stream U-Turn	No	No	No	No	No	No	No	High U-turn truck traffic and opposing through volumes
	High-T (unsignalized)	No	No	No	No	No	No	No	Existing signalized intersection
	Offset-T Intersections	No	No	No	No	No	No	No	Signalized T-intersection
	Diamond Interch (Stop Control)	**Yes**	**Yes**	**No**	**Yes**	**Yes**	**Yes**	**Yes**	Consider for Stage 2
	Diamond Interch (RAB Control)	**No**	**Yes**	**Yes**	**Yes**	**No**	**No**	**Yes**	Consider for Stage 2
	No LT Lane Improvements No RT Lane Improvements	No	No	No	No	No	No	No	NA
	Other unsignalized (provide description):	No	No	No	No	No	No	No	NA
Signalized Intersections	Traffic Signal	No	No	No	No	No	No	No	Existing signalized intersection
	Median U-Turn (Indirect Left)	No	No	No	No	No	No	No	Interchange intersection
	RCUT (signalized)	No	No	No	No	No	No	No	Interchange intersection
	Displaced Left Turn (CFI)	No	No	No	No	No	No	No	Interchange intersection
	Continuous Green-T	No	No	No	No	No	No	No	Interchange intersection
	Jughandle	No	No	No	No	No	No	No	Interchange intersection
	Quadrant Roadway	No	No	No	No	No	No	No	Interchange intersection
	Diamond Interch (Signal Control)	**Yes**	**Yes**	**Yes**	**Yes**	**Yes**	**Yes**	**Yes**	Consider for Stage 2
	Diverging Diamond	No	No	No	No	No	No	No	ROW constraint WB ramp and low volumes EB ramp
	Single Point Interchange	No	No	No	No	No	No	No	ROW constraint WB ramp and low crossing volumes
	No LT Lane Improvements No RT Lane Improvements	No	No	No	No	No	No	No	NA
	Other Signalized (provide description):	No	No	No	No	No	No	No	NA

= Intersection type selected for more detailed analysis in Stage 2 Alternative Selection Decision Record

GDOT ICE STAGE 2: ALTERNATIVE SELECTION DECISION RECORD

ICE Version 2.15 | Revised 07/01/2019

GDOT PI # (or N/A)	0013895-97	GDOT District:	1 - Gainesville	Date:	7/31/2019
County:	Gwinnett	Area Type:	Suburb/Transition	Agency/Firm:	Atkins
Project Location:	SR 316 Ramps @ Hurricane Trl			Analyst:	ZH
Existing Intersection Control:	Signal (turn lanes on mainline)			Type of Analysis:	Conventional Non-Safety Funded Project

Opening / Design Year Traffic Operations

Intersection meets signal/AWS warrants?	Meets Signal Warrants	
Traffic Analysis Measure of Effectiveness	Intersection Delay	
Traffic Analysis Software Used	Synchro 10	
Analysis Time Period	AM Peak Hr	PM Peak Hr
2024 Opening Yr No-Build Peak Hr Intersection Delay	15.2 sec	10.1 sec
2024 Opening Yr No-Build Peak Hr Intersection V/C	0.82	0.72
2044 Design Yr No-Build Peak Hr Intersection Delay	20.9 sec	16.0 sec
2044 Design Yr No-Build Peak Hr Intersection V/C ratio	0.93	0.86

Complete Streets Warrants Met?

- ☐ PEDESTRIANS
- ☐ BICYCLES
- ☐ TRANSIT

Crash Type: *Crash Data: Enter most recent 5 years of crash data*	*Crash Severity* PDO	Injury Crash*	Fatal Crash*	
Angle	26	21	0	24%
Head-On	0	3	1	2%
Rear End	93	26	0	61%
Sideswipe - same	10	1	0	6%
Sideswipe - opposite	0	1	0	1%
Not Collision w/Motor Veh	11	2	0	7%
TOTALS:	140	54	1	195

* Number of crashes resulting in injuries / fatalities, not number of persons

Alternatives Analysis:	**Alternative 1**		**Alternative 2**		**Alternative 3**		**Alternative 4**	**Alternative 5**
Proposed Control Type/Improvement:	Diamond Interch (Stop Control)		Diamond Interch (RAB Control)		Diamond Interch (Signal Control)		N/A	N/A
Project Cost: (From CostEst Worksheet)	*Additional description here*		*Additional description here*		*Additional description here*			
Construction Cost	$45,584,672		$49,784,672		$45,784,672			
ROW Cost	$6,056,000		$8,056,000		$6,056,000			
Environmental Cost	$285,000		$285,000		$285,000			
Reimbursable Utility Cost	$1,434,000		$1,934,000		$1,434,000			
Design & Contingency Cost	$3,500,000		$4,500,000		$4,000,000			
Cost Adjustment (justification req'd)								
Total Cost	$56,859,672		$64,559,672		$57,559,672			
Traffic Operations:								
Traffic Analysis Software Used	Synchro 10		SIDRA 7		Synchro 10			
Analysis Period	AM Peak Hr	PM Peak Hr	AM Peak Hr	PM Peak Hr	AM Peak Hr	PM Peak Hr		
2044 Design Yr Build Intersection Delay	40.9 sec	192.7 sec	13.7 sec	15.8 sec	48.6 sec	39.1 sec		
2044 Design Yr Build Intersection V/C	0.68	0.96	0.43	0.48	0.71	0.66		
Safety Analysis:								
Predefined CRF: PDO	27%		27%		27%			
Predefined CRF: Fatal/Inj	28%		28%		28%			
Predefined CRF Source:	FHWA Clearinghouse #s 463 / 464		FHWA Clearinghouse #s 463 / 464		FHWA Clearinghouse #s 463 / 464			
User Defined CRF: PDO								
User Defined CRF: Fatal/Inj								
User Defined CRF Source (write in if applicable):								
Environmental Impacts:[1]								
Historic District/Property	None		None		None			
Archaeology Resources	None		None		None			
Graveyard	None		None		None			
Stream	None		**Significant**		None			
Underground Tank/Hazmat	None		None		None			
Park Land	None		None		None			
EJ Community	None		None		None			
Wooded Area	None		None		None			
Wetland	None		None		None			
Stakeholder Posture:	*Note: If environmental impact is significant (**RED**), provide justification impact won't jeopardize project delivery using "Env" worksheet*							
	[1] Environmental impacts are only preliminary estimates; detailed environmental impact documentation will be included with project concept report							
Local Community Support	Neutral		Neutral		Neutral			
GDOT Support	Neutral		Neutral		Neutral			
Final ICE Stage 2 Score:	3.4		4.9		5.1			
Rank of Control Type Alternatives:	3		2		1			

Note: Stage 2 score is not given (shown as "-") if signal or AWS is selected as control type but respective warrants are not met

Provide additional comments and/or explain any unique analysis inputs, or results (as necessary): The roundabout alternative north of SR 316 would adversely impact the traffic flow and ciruclation to Yancey Brothers-potential ROW displacement, and to avoid displacement of Yancey Brothers would impact stream. The south roundabout increases impacts to streams and wetlands.

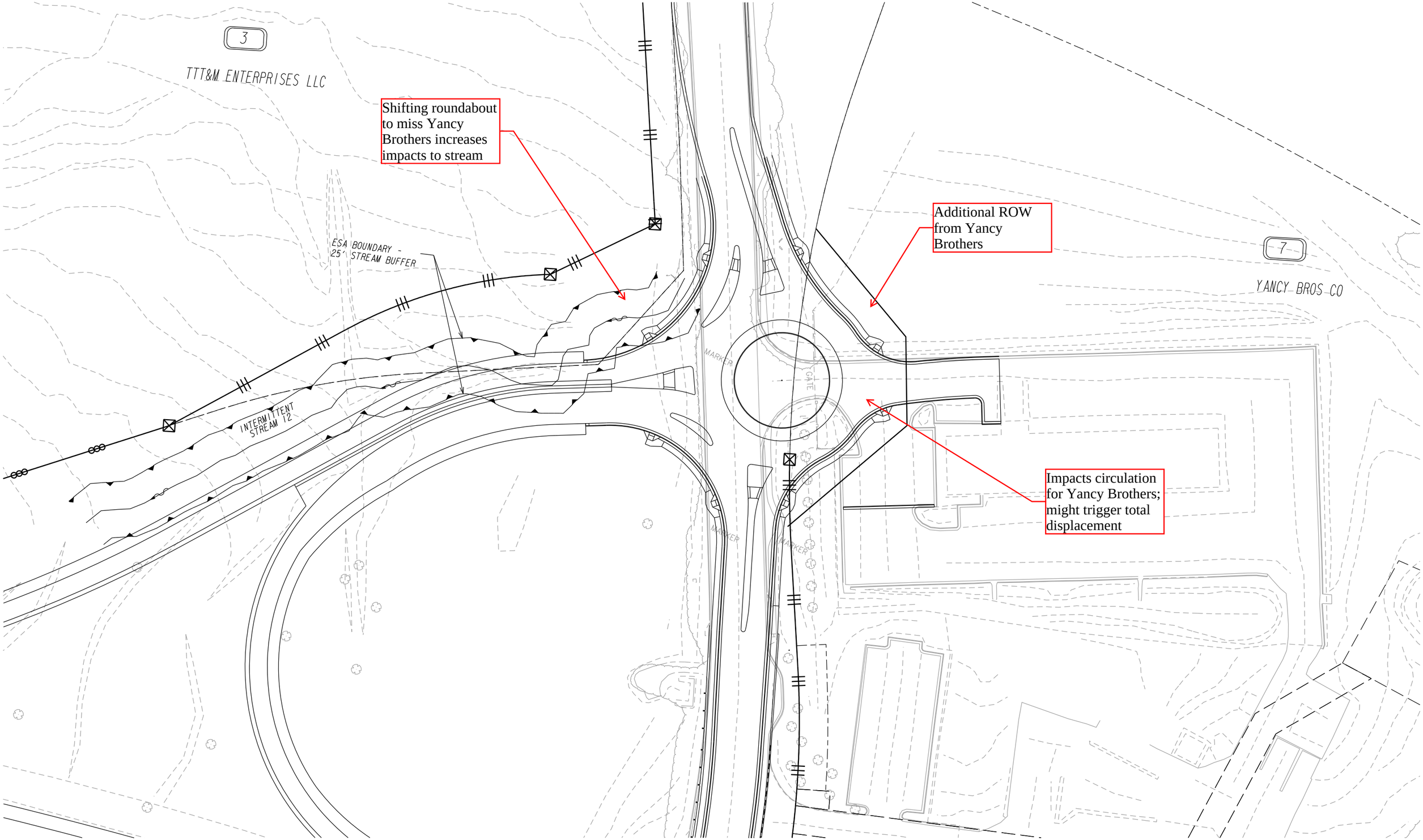
3
TTT&M ENTERPRISES LLC
Shifting roundabout to miss Yancy Brothers increases impacts to stream
ESA BOUNDARY - 25' STREAM BUFFER
INTERMITTENT STREAM T2
Additional ROW from Yancy Brothers
7
YANCY BROS CO
MARKER
GATE
Impacts circulation for Yancy Brothers; might trigger total displacement

GDOT ICE STAGE 1: SCREENING DECISION RECORD

ICE Version 2.15 | Revised 07/01/2019

GDOT PI #	0013895-97
Project Location:	SR 316 @ Winder Hwy
Existing Control:	Signal (turn lanes on mainline)
Prepared by:	Atkins
Date:	11/8/2019

Answer "Yes" or "No" to each policy question for each control type to identify which alternatives should be evaluated in the Stage 2 Decision Record; enter justification in the rightmost column

Note: Up to 5 alternatives may be selected and evaluated; Use this ICE Stage 1 to screen 5 or fewer alternatives to evaluate in Stage 2

	Intersection Alternative (see "Intersections" tab for detailed description of intersection/interchange type)	1. Does alternative address the project need in a balanced manner and in scale with the project?	2. Does alternative improve safety performance in terms of reducing severe crashes?	3. Does alternative incorporate safety, convenience and accessibility for pedestrians and/or bicyclists?	4. Does alternative improve (or preserve) traffic operations (congestion, delay, reliability, etc.)?	5. Does alternative appear feasible given the site characteristics, constrains & location context?	6. Does alternative appear feasible with respect to other project factors?	7. Overall feasible alternative (select alternative for further evaluation in Stage 2)?	**Screening Decision Justification:**
Unsignalized Intersections	Conventional (Minor Stop)	No	No	No	No	No	No	No	Existing signalized intersection
	Conventional (All-Way Stop)	No	No	No	No	No	No	No	SR316 volumes too high for stop control
	Mini Roundabout	No	No	No	No	No	No	No	Multilane roadways
	Single Lane Roundabout	No	No	No	No	No	No	No	Multilane roadways
	Multilane Roundabout	No	**Yes**	**Yes**	No	No	No	No	Existing high volumes and long queues on SR316
	RCUT (stop control)	No	No	No	No	No	No	No	High U-turn truck traffic and opposing through volumes
	RIRO w/down stream U-Turn	No	No	No	No	No	No	No	High U-turn truck traffic and opposing through volumes
	High-T (unsignalized)	No	No	No	No	No	No	No	Four-leg intersection
	Offset-T Intersections	No	No	No	No	No	No	No	Too high volume to be unsignalized T
	Diamond Interch (Stop Control)	No	No	No	No	No	No	No	Too high volume
	Diamond Interch (RAB Control)	No	No	No	No	No	No	No	Proximity to CSX rails
	No LT Lane Improvements No RT Lane Improvements	No	No	No	No	No	No	No	NA
	Partial Cloverleaf Interchange (RAB)	**Yes**	**Yes**	**Yes**	**Yes**	**Yes**	**Yes**	**Yes**	Consider for Stage 2
Signalized Intersections	Traffic Signal	No	No	No	No	No	No	No	Existing signalized intersection
	Median U-Turn (Indirect Left)	No	No	No	No	No	No	No	Interchange intersection
	RCUT (signalized)	No	No	No	No	No	No	No	Interchange intersection
	Displaced Left Turn (CFI)	No	No	No	No	No	No	No	Interchange intersection
	Continuous Green-T	No	No	No	No	No	No	No	Interchange intersection
	Jughandle	No	No	No	No	No	No	No	Interchange intersection
	Quadrant Roadway	No	No	No	No	No	No	No	Interchange intersection
	Diamond Interch (Signal Control)	No	**Yes**	**Yes**	**Yes**	No	No	No	Proximity to CSX rails
	Diverging Diamond	No	**Yes**	**Yes**	**Yes**	No	No	No	Proximity to CSX rails
	Single Point Interchange	No	**Yes**	**Yes**	**Yes**	No	No	No	Proximity to CSX rails
	No LT Lane Improvements No RT Lane Improvements	No	No	No	No	No	No	No	NA
	Partial Cloverleaf Interchange (Signal Control)	**Yes**	**Yes**	**Yes**	**Yes**	**Yes**	**Yes**	**Yes**	Consider for Stage 2

= Intersection type selected for more detailed analysis in Stage 2 Alternative Selection Decision Record

GDOT ICE STAGE 2: ALTERNATIVE SELECTION DECISION RECORD

ICE Version 2.15 | Revised 07/01/2019

GDOT PI # (or N/A)	0013895-97	GDOT District:	1 - Gainesville	Date:	11/8/2019
County:	Gwinnett	Area Type:	Suburb/Transition	Agency/Firm:	Atkins
Project Location:	SR 316 @ Winder Hwy			Analyst:	ZH
Existing Intersection Control:	Signal (turn lanes on mainline)			Type of Analysis:	Conventional Non-Safety Funded Project

Opening / Design Year Traffic Operations

Intersection meets signal/AWS warrants?	Meets Signal Warrants	
Traffic Analysis Measure of Effectiveness	Intersection Delay	
Traffic Analysis Software Used	Synchro 10	
Analysis Time Period	AM Peak Hr	PM Peak Hr
2024 Opening Yr No-Build Peak Hr Intersection Delay	35.9 sec	42.4 sec
2024 Opening Yr No-Build Peak Hr Intersection V/C	0.98	0.98
2044 Design Yr No-Build Peak Hr Intersection Delay	49.9 sec	77.6 sec
2044 Design Yr No-Build Peak Hr Intersection V/C ratio	1.21	1.18

Complete Streets Warrants Met?

- ☐ PEDESTRIANS
- ☐ BICYCLES
- ☐ TRANSIT

Crash Data: Enter most recent 5 years of crash data (Crash Type)	Crash Severity: PDO	Injury Crash*	Fatal Crash*	
Angle	42	12	1	13%
Head-On	3	4	0	2%
Rear End	242	93	0	77%
Sideswipe - same	25	0	0	6%
Sideswipe - opposite	2	0	0	0%
Not Collision w/Motor Veh	9	3	1	3%
TOTALS:	323	112	2	437

* Number of crashes resulting in injuries / fatalities, not number of persons

Alternatives Analysis:	Alternative 1	Alternative 2	Alternative 3	Alternative 4	Alternative 5
Proposed Control Type/Improvement:	Partial Cloverleaf Interchange (RAB)	Partial Cloverleaf Interchange (Signal Control)	N/A	N/A	N/A
Project Cost: (From CostEst Worksheet)	*Additional description here*	*Additional description here*			
Construction Cost	$10,000,000	$300,000			
ROW Cost	$2,000,000	$250,000			
Environmental Cost	$285,000	$285,000			
Reimbursable Utility Cost	$250,000	$100,000			
Design & Contingency Cost	$1,500,000	$85,000			
Cost Adjustment (justification req'd)					
Total Cost	$14,035,000	$1,020,000			
Traffic Operations:					
Traffic Analysis Software Used	SIDRA 7	Synchro 10			
Analysis Period	AM Peak Hr / PM Peak Hr	AM Peak Hr / PM Peak Hr			
2044 Design Yr Build Intersection Delay	15.8 sec / 19.7 sec	52.6 sec / 67.4 sec			
2044 Design Yr Build Intersection V/C	0.50 / 0.62	0.86 / 0.88			
Safety Analysis:					
Predefined CRF: PDO	0%	0%			
Predefined CRF: Fatal/Inj	0%	0%			
Predefined CRF Source:	N/A	N/A			
User Defined CRF: PDO	27%	27%			
User Defined CRF: Fatal/Inj	28%	28%			
User Defined CRF Source (write in if applicable):	FHWA 463/464	FHWA 463/464			
Environmental Impacts:[1]					
Historic District/Property	None	None			
Archaeology Resources	None	None			
Graveyard	None	None			
Stream	None	None			
Underground Tank/Hazmat	**Significant**	None			
Park Land	None	None			
EJ Community	None	None			
Wooded Area	None	None			
Wetland	None	None			
Stakeholder Posture:					
Local Community Support	Neutral	Supportive			
GDOT Support	Neutral	Supportive			
Final ICE Stage 2 Score:	4.2	5.1			
Rank of Control Type Alternatives:	2	1			

*Note: If environmental impact is significant (**RED**), provide justification impact won't jeopardize project delivery using "Env" worksheet*

[1] Environmental impacts are only preliminary estimates; detailed environmental impact documentation will be included with project concept report

Note: Stage 2 score is not given (shown as "-") if signal or AWS is selected as control type but respective warrants are not met

Provide additional comments and/or explain any unique analysis inputs, or results (as necessary): Compared cost of two multi-lane roundabouts to two traffic signals on Winder Highway at intersections with SR 316 Ramps.

Attachment 11

S I & A Reports

Georgia Department of Transportation
Bridge Inventory Data Listing

Processed Date:Mar-25-2019 10:35:03 AM

Parameters: Bridge Serial Number

Bridge Serial Number: 135-0097-0

County: Gwinnett

SUFF. RATING: 82.7

Location & Geography

Structure ID:	135-0097-0
200 Bridge Information:	07
*6 Feature Intersected:	ALCOVY RIVER
*7A Route Number Carried:	SR00316
*7B Facility Carried:	SR 316
9 Location:	3.2 MI N OF LAWRENCEVILLE
2 GDOT District:	4841100000 - D1 DISTRICT ONE GAINESVILLE
*91 Inspection Frequency:	24 Date: Dec-11-2017
92A Fracture Critical Insp. Freq:	0 Date: Feb-01-1901
92B Underwater Insp Freq:	0 Date: Feb-01-1901
92C Other Spc. Insp Freq:	0 Date: Feb-01-1901
* 4 Place Code:	00000
*5A Inventory Route(O/U):	1
5B Route Type:	3 - State
5C Service Designation:	1- Mainline
5D Route Number:	00316
5E Directional Suffix:	0. Not applicable
*16 Latitude:	33 - 59.0675
*17 Longtitude:	83 - 57.0440
98A Border Bridge:	0 98B: GA% 00
99 ID Number:	000000000000000
*100 STRAHNET:	0- The Feature is not a STRAHNET route.
12 Base Highway Network:	Yes
13A LRS Inventory Route:	1351031600
13B Sub Inventory Route:	0
101 Parallel Structure:	N. No parallel structure exists
*102 Direction of Traffic:	2- Two Way
*264 Road Inventory Mile Post:	9.22
*208 Inspection Area:	Area 07
*104 Highway System:	1-Inventory Route is on the NHS
*26 Functional Classification:	14- Urban - Other Principal Arterial
*204A Federal Route Type:	F - Primary.
*204B Federal Route Number:	01081
105 Federal Lands Highway:	0. Not applicable
*110 Truck Route:	1- The Feature is part of the National Network For Trucks
217 Benchmark Elevation:	0000.00
* Location ID No:	135-00316D-009.22E

218 Datum:	0- Not Applicable
*19 Bypass Length:	1
*20 Toll:	3- On a Free Road or Non-Highway
*21 Maintenance Responsibility:	01-State Highway Agency.
*22 Owner:	01-State Highway Agency.
*31 Design Load:	6- HS 20 + Mod (2-24,000# Axles @ 4ft Ctrs., when they govern)
37 Historical Significance:	5- Not eligible for the National Register of Historic Places
205 Congressional District:	007
27 Year Constructed:	1982
106 Year Reconstructed:	0
33 Bridge Median:	1-Open
34 Skew:	0
35 Structure Flared:	No
38 Navigation Control:	0- Navigation is not controlled by an Agency
213 Special Steel Design:	0- Not applicable or other
267A Type Paint Super Structure:	0- Not Applicable. Year : 0000
267B Type Paint Sub Structure:	0- Not Applicable Year : 0000
*42A Type of Service On:	1-Highway
*42B Type of Service Under:	5-Waterway
214A Movable Bridge:	0
214B Operator on Duty:	0
203 Type Bridge:	Q - Reinforced Concrete Bridge Culvert
259 Pile Encasement:	3
*43A Structure Type Main material:	1-Concrete
*43B Structure Type Main Type:	19- Culvert
45 Number of Main Spans:	3
44 Structure Type Approach:	A:0- Other B: 0- Other
46 Number of Approach Spans:	0
226 Bridge Curve:	A: Vertical: NoB: Horizontal: No
111 Pier Protection:	N - Navigation Control item coded 0, or Feature not a waterway
107 Deck Structure Type:	N - None
108A Wearing Surface Type:	N. Not applicable
108B Membrane Type:	N. Not applicable
108C Deck Protection:	N. Not applicable
265 Underwater Inspection Area:	0

Signs & Attachments

225 Expansion Joint Type:	00- No expansion joint.
242 Deck Drains:	0- None.
243A Parapet Location:	0- None present.
243B Parapet Height:	0.00
243C Parapet Width:	0.00
238A Curb Height:	0.0
238B Curb Material:	0- None.
239A Handrail Left:	0- None.
239B Handrail Right:	0- None.
*240 Median Barrier Rail:	0- None.
241A Bridge Median Height:	0
241B Bridge Median Width:	0
*230A Guardrail Location Direction Rear:	5- Right side only, approach and continuous.
*230B Guardrail Location Direction Fwrd:	5- Right side only, approach and continuous.
*230C Guardrail Location Opposing Rear:	5- Right side only, approach and continuous.
*230D Guardrail Location Opposing Fwrd:	5- Right side only, approach and continuous.
244 Approach Slab:	0- None.
224 Retaining Wall:	0- None.
233 Posted Speed Limit:	55
236 Warning Sign:	No
234 Delineator:	Yes
235 Hazard Boards:	No
237A Gas:	00- Not Applicable
237B Water:	00- Not Applicable
237C Electric:	00- Not Applicable
237D Telephone:	00- Not Applicable
237E Sewer:	00- Not Applicable
247A Lighting: Street:	No
247B Navigation:	No
247C Aerial:	No
*248 County Continuity No.:	00
36A Bridge Railings:	1- Meets current standards
36B Transition:	1- Meets current standards
36C Approach Guardrail:	1- Meets current standards
36D Approach Guardrail Ends:	1- Meets current standards

Georgia Department of Transportation
Bridge Inventory Data Listing

Processed Date:Mar-25-2019 10:35:03 AM

Bridge Serial Number: 135-0097-0

County: Gwinnett

SUFF. RATING: 82.7

Programming Data

201 Project Number:	TQF-108-1 (9)
202 Plans Available:	0- No Plans Available.
249 Proposed Project Number:	000000000000000000000000
250A Reconstruction Approval Status:	No
250B Route Approval Status:	No
250C Approval Status Definition:	0
250D Approval Status Federal:	0
251Project Identification Number:	0000000
252 Contract Date:	Feb-01-1901
260 Seismic Number:	00000
75A Type Work Proposed:	0- Not Applicable
75B Work Done by:	1- Work to be done by contract
94 Bridge Improvement Cost:(X$1,000)	$175
95 Roadway Improvement Cost: (X$1,000)	$18
96 Total Improvement Cost: (X$1,000)	$263
76 Improvement Length:	0'
97 Year Improvement Cost Based On:	2013
114 Future AADT:	61590
115 Future AADT Year:	2032

Hydraulic Data

113 Scour Critical:	8. Foundation stable for conditions; scour above footing
216A Water Depth:	03.2
216B Bridge Height:	07.8
222 Slope Protection:	0
221A Spur Dike Rear:	
221B Spur Dike Fwd:	
219 Fender System:	0- None.
220 Dolphin:	
223A Culvert Cover:	20
223B Culvert Type:	1- Concrete.
223C Number of Barrels:	3
223D Barrel Width:	9
223E Barrel Height:	8
223F Culvert Length:	274
223G Culvert Apron:	0
39 Navigation Vertical Clearance:	0'
40 Navigation Horizontal Clearance:	0
116 Navigation Vertical Clear Closed:	0

Measurements:

*29 AADT:	41060
*30 AADT Year:	2012
109 % Truck Traffic:	10
* 28A Lanes On:	4
*28B Lanes Under:	0
210A Tracks On:	00
210B Tracks Under:	0
* 48 Maximum Span Length:	9
* 49 Structure Length:	29
51 Bridge Roadway Width:	0'
52 Deck Width:	0'
* 47 Total Horizontal Clearance:	51.9'
50A Curb / Sidewalk Width Left:	0
50B Curb / Sidewalk Width Right:	0
32 Approach Rdwy. Width:	64'

***229 Approach Roadway**

Rear Shoulder Left: Width:	4	*Right Width:*4	Type: 1 - Concrete.
Fwd Shoulder: Left Width:	4	*Right Width:*4	Type: 1 - Concrete.
Rear Pavement: Width:	24	*Type:*1- Concrete.	
Forward Pavement: Width:	24	*Type:*1- Concrete.	
Intersection Rear:	1	*Forward:*0	

53 Minimum Vertical Clearance Over Rd:	99' 99"
54A Under Reference Feature:	N- Feature not a highway or railroad.
54B Minimum Clearance Under:	0' 0"

***228 Minimum Vertical Clearance**

228A Actual Odometer Direction:	99'99"
228B Actual Opposing Direction:	99'99"
228C Posted Odometer Direction:	00'00"
228D Posted Opposing Direction:	00'00"
55A Lateral Underclearance Reference:	N- Feature not a highway or railroad.
55B Lateral Underclearance on Right:	0
56 Lateral Underclearance on Left:	0
10A Direction of Travel for Max Min:	0
10B Max Min Vertical Clearance:	99'99"
245A Deck Thickness Main:	0.0
245B Deck Thickness Approach:	0
246 Overlay Thickness:	0

Ratings and Posting

65 Inventory Rating Method:	0-Field Eval and Documented Eng Judgement
63 Operating Rating Method:	0-Field Eval and Documented Eng Judgement
66A Inventory Type:	2 - HS loading.
66B Inventory Rating:	110
64A Operating Type:	2 - HS loading.
64B Operating Rating:	110

231Calculated Loads		**Posting Required**
231A H-Modified:	00	No
231B Type3/Tandem:	00	No
231C Timber:	00	No
231D HS-Modified:	00	No
231E Type 3S2:	00	No
231F Piggyback:	00	No

261 H Inventory Rating:	20
262 H Operating Rating:	34
67 Structural Evaluation:	7
58 Deck Condition:	N - Not Applicable
59 Superstructure Condition:	N - Not Applicable
* 227 Collision Damage:	
60A Substructure Condition:	N - Not Applicable
60B Scour Condition:	5 - Fair Condition
60C Underwater Condition:	N - Not Applicable
71 Waterway Adequacy:	8-Equal to present desirable criteria.
61 Channel Protection Cond.:	5-Somewhat better than minimum adequacy to tolerate being left in place as is.
68 Deck Geometry:	N
69 UnderClr. Horz/Vert:	N
72 Approach Alignment:	7-Between 8 and 6
62 Culvert:	7 - Good Condition
70 Bridge Posting Required:	5. Equal to or above legal loads
41 Struct Open, Posted, CL:	A. Open, no restriction
* 103 Temporary Structure:	No

232 Posted Loads

232A H-Modified:	00
232B Type3/Tandem:	00
232C Timber:	00
232D HS-Modified:	00
232E Type 3s2:	00
232F Piggyback:	00
253 Notification Date:	Feb-01-1901
258 Federal Notify Date:	Feb-01-1901

Georgia Department of Transportation
Bridge Inventory Data Listing

Processed Date:Mar-25-2019 10:37:13 AM

Parameters: Bridge Serial Number

Bridge Serial Number: 135-0098-0 **County: Gwinnett** **SUFF. RATING: 96.1**

Location & Geography

Structure ID:	135-0098-0
200 Bridge Information:	06
*6 Feature Intersected:	CSX RAILROAD
*7A Route Number Carried:	SR00316
*7B Facility Carried:	SR 316 (EBL)
9 Location:	3.6 MI N OF LAWRENCEVILLE
2 GDOT District:	4841100000 - D1 DISTRICT ONE GAINESVILLE
*91 Inspection Frequency:	24 Date: Oct-18-2017
92A Fracture Critical Insp. Freq:	0 Date: Feb-01-1901
92B Underwater Insp Freq:	0 Date: Feb-01-1901
92C Other Spc. Insp Freq:	0 Date: Feb-01-1901
* 4 Place Code:	00000
*5A Inventory Route(O/U):	1
5B Route Type:	3 - State
5C Service Designation:	1- Mainline
5D Route Number:	00316
5E Directional Suffix:	0. Not applicable
*16 Latitude:	33 - 59.0454
*17 Longtitude:	83 - 55.6656
98A Border Bridge:	0 98B: GA% 00
99 ID Number:	000000000000000
*100 STRAHNET:	0- The Feature is not a STRAHNET route.
12 Base Highway Network:	Yes
13A LRS Inventory Route:	1351031600
13B Sub Inventory Route:	0
101 Parallel Structure:	R. Right structure of parallel bridges
*102 Direction of Traffic:	1- One Way
*264 Road Inventory Mile Post:	10.58
*208 Inspection Area:	Area 07
*104 Highway System:	1-Inventory Route is on the NHS
*26 Functional Classification:	14- Urban - Other Principal Arterial
*204A Federal Route Type:	F - Primary.
*204B Federal Route Number:	01081
105 Federal Lands Highway:	0. Not applicable
*110 Truck Route:	1- The Feature is part of the National Network For Trucks
217 Benchmark Elevation:	0000.00
* Location ID No:	135-00316D-010.58E

218 Datum:	0- Not Applicable
*19 Bypass Length:	1
*20 Toll:	3- On a Free Road or Non-Highway
*21 Maintenance Responsibility:	01-State Highway Agency.
*22 Owner:	01-State Highway Agency.
*31 Design Load:	5- HS 20
37 Historical Significance:	5- Not eligible for the National Register of Historic Places
205 Congressional District:	007
27 Year Constructed:	1982
106 Year Reconstructed:	0
33 Bridge Median:	1-Open
34 Skew:	20
35 Structure Flared:	No
38 Navigation Control:	N- Bridge is not over water
213 Special Steel Design:	0- Not applicable or other
267A Type Paint Super Structure:	0- Not Applicable. Year : 0000
267B Type Paint Sub Structure:	0- Not Applicable Year : 0000
*42A Type of Service On:	1-Highway
*42B Type of Service Under:	2-Railroad
214A Movable Bridge:	0
214B Operator on Duty:	0
203 Type Bridge:	A- Spread footing. O. Concrete O. Concrete O. Concrete
259 Pile Encasement:	3
*43A Structure Type Main material:	5-Prestressed Concrete
*43B Structure Type Main Type:	2-Stringer/Multi-Beam or Girder
45 Number of Main Spans:	3
44 Structure Type Approach:	A:0- Other B: 0- Other
46 Number of Approach Spans:	0
226 Bridge Curve:	A: Vertical: NoB: Horizontal: No
111 Pier Protection:	N - Navigation Control item coded 0, or Feature not a waterway
107 Deck Structure Type:	1 - C-I-P Portland Cement Concrete - Epoxy Coated Rebars
108A Wearing Surface Type:	1. Concrete
108B Membrane Type:	0. None
108C Deck Protection:	8. Unknown
265 Underwater Inspection Area:	0

Signs & Attachments

225 Expansion Joint Type:	02- Open or sealed concrete joint (silicone sealant).
242 Deck Drains:	0- None.
243A Parapet Location:	0- None present.
243B Parapet Height:	0.00
243C Parapet Width:	0.00
238A Curb Height:	0.0
238B Curb Material:	0- None.
239A Handrail Left:	9- Concrete New Jersey Type Barrier.
239B Handrail Right:	9- Concrete New Jersey Type Barrier.
*240 Median Barrier Rail:	0- None.
241A Bridge Median Height:	0
241B Bridge Median Width:	0
*230A Guardrail Location Direction Rear:	6- Both sides, approach and continuous.
*230B Guardrail Location Direction Fwrd:	5- Right side only, approach and continuous.
*230C Guardrail Location Opposing Rear:	0- None.
*230D Guardrail Location Opposing Fwrd:	0- None.
244 Approach Slab:	3- Forward and Rear.
224 Retaining Wall:	0- None.
233 Posted Speed Limit:	55
236 Warning Sign:	No
234 Delineator:	No
235 Hazard Boards:	No
237A Gas:	00- Not Applicable
237B Water:	00- Not Applicable
237C Electric:	00- Not Applicable
237D Telephone:	00- Not Applicable
237E Sewer:	00- Not Applicable
247A Lighting: Street:	No
247B Navigation:	No
247C Aerial:	No
*248 County Continuity No.:	00
36A Bridge Railings:	1- Meets current standards
36B Transition:	2- Inspected feature meets acceptable construction date standards.
36C Approach Guardrail:	2- Inspected feature meets acceptable construction date standards.
36D Approach Guardrail Ends:	2- Inspected feature meets acceptable construction date standards.

Georgia Department of Transportation
Bridge Inventory Data Listing

Processed Date:Mar-25-2019 10:37:13 AM

Bridge Serial Number: 135-0098-0

County: Gwinnett

SUFF. RATING: 96.1

Programming Data

201 Project Number:	TQF-108-1 (9)
202 Plans Available:	4- Plans in InfoImage/GAMS
249 Proposed Project Number:	000000000000000000000000
250A Reconstruction Approval Status:	No
250B Route Approval Status:	No
250C Approval Status Definition:	0
250D Approval Status Federal:	0
251Project Identification Number:	0000000
252 Contract Date:	Feb-01-1901
260 Seismic Number:	00000
75A Type Work Proposed:	0- Not Applicable
75B Work Done by:	1- Work to be done by contract
94 Bridge Improvement Cost:(X$1,000)	$649
95 Roadway Improvement Cost: (X$1,000)	$65
96 Total Improvement Cost: (X$1,000)	$973
76 Improvement Length:	0'
97 Year Improvement Cost Based On:	2013
114 Future AADT:	61590
115 Future AADT Year:	2032

Measurements:

*29 AADT:	41060
*30 AADT Year:	2012
109 % Truck Traffic:	10
* 28A Lanes On:	2
*28B Lanes Under:	0
210A Tracks On:	00
210B Tracks Under:	2
* 48 Maximum Span Length:	60
* 49 Structure Length:	166
51 Bridge Roadway Width:	40.6'
52 Deck Width:	43.6'
* 47 Total Horizontal Clearance:	40.6'
50A Curb / Sidewalk Width Left:	0
50B Curb / Sidewalk Width Right:	0
32 Approach Rdwy. Width:	32'

***229 Approach Roadway**

Rear Shoulder Left: Width:	4	*Right Width:*4	Type: 1 - Concrete.
Fwd Shoulder: Left Width:	4	*Right Width:*4	Type: 1 - Concrete.
Rear Pavement: Width:	24	*Type:*1- Concrete.	
Forward Pavement: Width:	24	*Type:*1- Concrete.	
Intersection Rear:	1	*Forward:*1	

53 Minimum Vertical Clearance Over Rd:	99' 99"
54A Under Reference Feature:	R- Railroad beneath structure.
54B Minimum Clearance Under:	23' 9"

***228 Minimum Vertical Clearance**

228A Actual Odometer Direction:	99'99"
228B Actual Opposing Direction:	99'99"
228C Posted Odometer Direction:	00'00"
228D Posted Opposing Direction:	00'00"
55A Lateral Underclearance Reference:	R- Railroad beneath structure.
55B Lateral Underclearance on Right:	9.3
56 Lateral Underclearance on Left:	0
10A Direction of Travel for Max Min:	0
10B Max Min Vertical Clearance:	99'99"
245A Deck Thickness Main:	8.3
245B Deck Thickness Approach:	0
246 Overlay Thickness:	0

Ratings and Posting

65 Inventory Rating Method:	1-Load Factor (LF)
63 Operating Rating Method:	1-Load Factor (LF)
66A Inventory Type:	2 - HS loading.
66B Inventory Rating:	42
64A Operating Type:	2 - HS loading.
64B Operating Rating:	70

231Calculated Loads		**Posting Required**
231A H-Modified:	21	No
231B Type3/Tandem:	33	No
231C Timber:	37	No
231D HS-Modified:	30	No
231E Type 3S2:	40	No
231F Piggyback:	40	No

261 H Inventory Rating:	35
262 H Operating Rating:	59
67 Structural Evaluation:	7
58 Deck Condition:	6 - Satisfactory Condition
59 Superstructure Condition:	7 - Good Condition
* 227 Collision Damage:	
60A Substructure Condition:	7 - Good Condition
60B Scour Condition:	N - Not Applicable
60C Underwater Condition:	N - Not Applicable
71 Waterway Adequacy:	Not Applicable.
61 Channel Protection Cond.:	Not Applicable.
68 Deck Geometry:	7
69 UnderClr. Horz/Vert:	N
72 Approach Alignment:	8-No reduction of vehicle operating speed required.
62 Culvert:	N - Not Applicable
70 Bridge Posting Required:	5. Equal to or above legal loads
41 Struct Open, Posted, CL:	A. Open, no restriction
* 103 Temporary Structure:	No

232 Posted Loads

232A H-Modified:	00
232B Type3/Tandem:	00
232C Timber:	00
232D HS-Modified:	00
232E Type 3s2:	00
232F Piggyback:	00
253 Notification Date:	Feb-01-1901
258 Federal Notify Date:	Feb-01-1901

Hydraulic Data

113 Scour Critical:	N. Bridge not over waterway.
216A Water Depth:	00.0
216B Bridge Height:	00.0
222 Slope Protection:	4
221A Spur Dike Rear:	
221B Spur Dike Fwd:	
219 Fender System:	0- None.
220 Dolphin:	
223A Culvert Cover:	000
223B Culvert Type:	0- Not Applicable
223C Number of Barrels:	0
223D Barrel Width:	0
223E Barrel Height:	0
223F Culvert Length:	0
223G Culvert Apron:	0
39 Navigation Vertical Clearance:	0'
40 Navigation Horizontal Clearance:	0
116 Navigation Vertical Clear Closed:	0

Georgia Department of Transportation
Bridge Inventory Data Listing

Processed Date:Mar-25-2019 10:43:37 AM

Parameters: Bridge Serial Number

Bridge Serial Number: 135-0099-0 **County: Gwinnett** **SUFF. RATING: 96.1**

Location & Geography

Structure ID:	135-0099-0
200 Bridge Information:	06
*6 Feature Intersected:	CSX RAILROAD
*7A Route Number Carried:	SR00316
*7B Facility Carried:	SR 316 (WBL)
9 Location:	3.6 MI N OF LAWRENCEVILLE
2 GDOT District:	4841100000 - D1 DISTRICT ONE GAINESVILLE
*91 Inspection Frequency:	24 Date: Oct-18-2017
92A Fracture Critical Insp. Freq:	0 Date: Feb-01-1901
92B Underwater Insp Freq:	0 Date: Feb-01-1901
92C Other Spc. Insp Freq:	0 Date: Feb-01-1901
* 4 Place Code:	00000
*5A Inventory Route(O/U):	1
5B Route Type:	3 - State
5C Service Designation:	1- Mainline
5D Route Number:	00316
5E Directional Suffix:	0. Not applicable
*16 Latitude:	33 - 59.0521
*17 Longtitude:	83 - 55.6480
98A Border Bridge:	0 98B: GA% 00
99 ID Number:	000000000000000
*100 STRAHNET:	0- The Feature is not a STRAHNET route.
12 Base Highway Network:	Yes
13A LRS Inventory Route:	1351031600
13B Sub Inventory Route:	0
101 Parallel Structure:	L. Left structure of parallel bridges
*102 Direction of Traffic:	1- One Way
*264 Road Inventory Mile Post:	10.59
*208 Inspection Area:	Area 07
*104 Highway System:	1-Inventory Route is on the NHS
*26 Functional Classification:	14- Urban - Other Principal Arterial
*204A Federal Route Type:	F - Primary.
*204B Federal Route Number:	01081
105 Federal Lands Highway:	0. Not applicable
*110 Truck Route:	1- The Feature is part of the National Network For Trucks
217 Benchmark Elevation:	0000.00
* Location ID No:	135-00316D-010.59E

218 Datum:	0- Not Applicable
*19 Bypass Length:	1
*20 Toll:	3- On a Free Road or Non-Highway
*21 Maintenance Responsibility:	01-State Highway Agency.
*22 Owner:	01-State Highway Agency.
*31 Design Load:	5- HS 20
37 Historical Significance:	5- Not eligible for the National Register of Historic Places
205 Congressional District:	007
27 Year Constructed:	1982
106 Year Reconstructed:	0
33 Bridge Median:	1-Open
34 Skew:	20
35 Structure Flared:	No
38 Navigation Control:	N- Bridge is not over water
213 Special Steel Design:	0- Not applicable or other
267A Type Paint Super Structure:	0- Not Applicable. Year : 0000
267B Type Paint Sub Structure:	0- Not Applicable Year : 0000
*42A Type of Service On:	1-Highway
*42B Type of Service Under:	2-Railroad
214A Movable Bridge:	0
214B Operator on Duty:	0
203 Type Bridge:	A- Spread footing. O. Concrete O. Concrete O. Concrete
259 Pile Encasement:	3
*43A Structure Type Main material:	5-Prestressed Concrete
*43B Structure Type Main Type:	2-Stringer/Multi-Beam or Girder
45 Number of Main Spans:	3
44 Structure Type Approach:	A:0- Other B: 0- Other
46 Number of Approach Spans:	0
226 Bridge Curve:	A: Vertical: NoB: Horizontal: No
111 Pier Protection:	N - Navigation Control item coded 0, or Feature not a waterway
107 Deck Structure Type:	1 - C-I-P Portland Cement Concrete - Epoxy Coated Rebars
108A Wearing Surface Type:	1. Concrete
108B Membrane Type:	0. None
108C Deck Protection:	8. Unknown
265 Underwater Inspection Area:	0

Signs & Attachments

225 Expansion Joint Type:	02- Open or sealed concrete joint (silicone sealant).
242 Deck Drains:	0- None.
243A Parapet Location:	0- None present.
243B Parapet Height:	0.00
243C Parapet Width:	0.00
238A Curb Height:	0.0
238B Curb Material:	0- None.
239A Handrail Left:	9- Concrete New Jersey Type Barrier.
239B Handrail Right:	9- Concrete New Jersey Type Barrier.
*240 Median Barrier Rail:	0- None.
241A Bridge Median Height:	0
241B Bridge Median Width:	0
*230A Guardrail Location Direction Rear:	6- Both sides, approach and continuous.
*230B Guardrail Location Direction Fwrd:	5- Right side only, approach and continuous.
*230C Guardrail Location Opposing Rear:	0- None.
*230D Guardrail Location Opposing Fwrd:	0- None.
244 Approach Slab:	3- Forward and Rear.
224 Retaining Wall:	0- None.
233 Posted Speed Limit:	55
236 Warning Sign:	No
234 Delineator:	No
235 Hazard Boards:	No
237A Gas:	00- Not Applicable
237B Water:	00- Not Applicable
237C Electric:	12- Top Right.
237D Telephone:	00- Not Applicable
237E Sewer:	00- Not Applicable
247A Lighting: Street:	No
247B Navigation:	No
247C Aerial:	No
*248 County Continuity No.:	00
36A Bridge Railings:	1- Meets current standards
36B Transition:	2- Inspected feature meets acceptable construction date standards.
36C Approach Guardrail:	2- Inspected feature meets acceptable construction date standards.
36D Approach Guardrail Ends:	2- Inspected feature meets acceptable construction date standards.

Georgia Department of Transportation
Bridge Inventory Data Listing

Processed Date:Mar-25-2019 10:43:37 AM

Bridge Serial Number: 135-0099-0

County: Gwinnett

SUFF. RATING: 96.1

Programming Data

201 Project Number:	TQF-108-1 (9)
202 Plans Available:	4- Plans in InfoImage/GAMS
249 Proposed Project Number:	000000000000000000000000
250A Reconstruction Approval Status:	No
250B Route Approval Status:	No
250C Approval Status Definition:	0
250D Approval Status Federal:	0
251Project Identification Number:	0000000
252 Contract Date:	Feb-01-1901
260 Seismic Number:	00000
75A Type Work Proposed:	0- Not Applicable
75B Work Done by:	1- Work to be done by contract
94 Bridge Improvement Cost:(X$1,000)	$653
95 Roadway Improvement Cost: (X$1,000)	$65
96 Total Improvement Cost: (X$1,000)	$979
76 Improvement Length:	0'
97 Year Improvement Cost Based On:	2013
114 Future AADT:	61590
115 Future AADT Year:	2032

Measurements:

*29 AADT:	41060
*30 AADT Year:	2012
109 % Truck Traffic:	10
* 28A Lanes On:	2
*28B Lanes Under:	0
210A Tracks On:	00
210B Tracks Under:	2
* 48 Maximum Span Length:	60
* 49 Structure Length:	167
51 Bridge Roadway Width:	40.5'
52 Deck Width:	43.6'
* 47 Total Horizontal Clearance:	40.5'
50A Curb / Sidewalk Width Left:	0
50B Curb / Sidewalk Width Right:	0
32 Approach Rdwy. Width:	32'

***229 Approach Roadway**

Rear Shoulder Left: Width:	4	*Right Width:*4	Type: 1 - Concrete.
Fwd Shoulder: Left Width:	4	*Right Width:*4	Type: 1 - Concrete.
Rear Pavement: Width:	24	*Type:*1- Concrete.	
Forward Pavement: Width:	24	*Type:*1- Concrete.	
Intersection Rear:	1	*Forward:*1	

53 Minimum Vertical Clearance Over Rd:	99' 99"
54A Under Reference Feature:	R- Railroad beneath structure.
54B Minimum Clearance Under:	22' 3"

***228 Minimum Vertical Clearance**

228A Actual Odometer Direction:	99'99"
228B Actual Opposing Direction:	99'99"
228C Posted Odometer Direction:	00'00"
228D Posted Opposing Direction:	00'00"
55A Lateral Underclearance Reference:	R- Railroad beneath structure.
55B Lateral Underclearance on Right:	9.7
56 Lateral Underclearance on Left:	0
10A Direction of Travel for Max Min:	0
10B Max Min Vertical Clearance:	99'99"
245A Deck Thickness Main:	8.3
245B Deck Thickness Approach:	0
246 Overlay Thickness:	0

Ratings and Posting

65 Inventory Rating Method:	1-Load Factor (LF)
63 Operating Rating Method:	1-Load Factor (LF)
66A Inventory Type:	2 - HS loading.
66B Inventory Rating:	40
64A Operating Type:	2 - HS loading.
64B Operating Rating:	67

231Calculated Loads		**Posting Required**
231A H-Modified:	21	No
231B Type3/Tandem:	30	No
231C Timber:	37	No
231D HS-Modified:	30	No
231E Type 3S2:	40	No
231F Piggyback:	40	No

261 H Inventory Rating:	32
262 H Operating Rating:	54
67 Structural Evaluation:	7
58 Deck Condition:	6 - Satisfactory Condition
59 Superstructure Condition:	7 - Good Condition
* 227 Collision Damage:	
60A Substructure Condition:	7 - Good Condition
60B Scour Condition:	N - Not Applicable
60C Underwater Condition:	N - Not Applicable
71 Waterway Adequacy:	Not Applicable.
61 Channel Protection Cond.:	Not Applicable.
68 Deck Geometry:	7
69 UnderClr. Horz/Vert:	N
72 Approach Alignment:	8-No reduction of vehicle operating speed required.
62 Culvert:	N - Not Applicable
70 Bridge Posting Required:	5. Equal to or above legal loads
41 Struct Open, Posted, CL:	A. Open, no restriction
* 103 Temporary Structure:	No

232 Posted Loads

232A H-Modified:	00
232B Type3/Tandem:	00
232C Timber:	00
232D HS-Modified:	00
232E Type 3s2:	00
232F Piggyback:	00
253 Notification Date:	Feb-01-1901
258 Federal Notify Date:	Feb-01-1901

Hydraulic Data

113 Scour Critical:	N. Bridge not over waterway.
216A Water Depth:	00.0
216B Bridge Height:	00.0
222 Slope Protection:	4
221A Spur Dike Rear:	
221B Spur Dike Fwd:	
219 Fender System:	0- None.
220 Dolphin:	
223A Culvert Cover:	000
223B Culvert Type:	0- Not Applicable
223C Number of Barrels:	0
223D Barrel Width:	0
223E Barrel Height:	0
223F Culvert Length:	0
223G Culvert Apron:	0
39 Navigation Vertical Clearance:	0'
40 Navigation Horizontal Clearance:	0
116 Navigation Vertical Clear Closed:	0

Georgia Department of Transportation

Culvert Inspection Report

District: 4841100000 - D1 DISTRICT
Location ID: 135-00316D-009.22E
Structure ID: 135-0097-0
Bridge Information: 7-Initial inventory

Inspection Area: 7
Over: ALCOVY RIVER
Road Name: SR 316

County: Gwinnett

Georgia Department of Transportation

Evaluation

Inspection Team **Inspection Type:** General **Inspection Date:** 12/11/2017
Team Leader: Joshua M. Cofer
Assistants: Dana McCrary

Construction Date : 1982 **Reconstruction Date :** 0 **Design:** 6- HS 20 + Mod (2-24,000# Axles @ 4ft Ctrs., when

Apron : 0- No Apron present. **NBIS Culvert Code :** 7 - Good Condition

Culvert Type: Q - Reinforced Concrete Bridge Culvert

Number of Barrels : 3 **Barrel Height (Ft):** 8 **Barrel Width (Ft):** 9

Barrel Length (Ft): 274 **Fill Depth (Ft):** 20 **Degrees Skew:** 0

Pipe Beveled : **Inlet :** No **Outlet :** No **Toe Wall Present:** **Inlet :** Yes **Outlet :** No

Channel Bed Probing : (Location of Probing and Findings)

The channel bed was probed at both the inlet and outlet ends for soundness.
Inlet probed penetration is 3' silt and sand 1' loose with clay bottom.
Outlet probed penetration is silt and sand 1' loose with rock bottom.

Agile Assets was not allowing data to be changed in the write-up field, so the data was copied into Microsoft Word, and pasted into this field.

Channel Bed Scour : (Scour Description and Extent) **NBIS Scour Code :** 5 - Fair Condition

Inlet scour is 3.5' at the wing wall at barrel 1 and 3' scour at barrel 1.
Outlet - none

Inlet area of attack is wing wall barrel 1.

Inspection

1982- 9' X 8' Concrete culvert with a outlet apron.
HS - 20 + M design.
Project # IQF-108-1 (9)

There is interior wall spalling inlet.
Inlet barrel 1 wing has cracking vertical from the wing at the parapet.
There is undermining at the wing at barrel 1 inlet 1' up and down 3' wide and 10' long end free hanging.
There is also a wash behind the wing barrel 1 inlet 12' long 12' wide 8' up and down-Area of attack.
Barrel 1 has a 1 sf spall with exposed rebar on the ceiling approximately 40' from the outlet end.
No water flow barrel 2.
Barrel 1 wash out behind wing wall left rear inlet 4'

Topside Equipment Used

Access Equipment: None **Topside Boat:** None
Waders: Hip boots **Special Imaging Device:** None

District: 4841100000 - D1 DISTRICT **Inspection Area:** 7 **County:** Gwinnett
Location ID: 135-00316D-009.22E **Over:** ALCOVY RIVER
Structure ID: 135-0097-0 **Road Name:** SR 316

Conditional Situations

Traffic Control : No **Underwater Inspection:** No

Load Rating and Posting

Truck Type	Gross/H-Modified	HSModified	Tandem	3-S-2	Log	Piggy
Calculated Posting	00	00	00	00	00	00
Posting Required	No	No	No	No	No	No
Existing Posting	00	00	00	00	00	00

Item 103 Temporarily Shored : No **Posting Required:** No
Item 41 - Structure Open, Posted or Closed: A. Open, no restriction

Element Data

Element	Parent Element	Measurement Unit	Env*	Quantity	State 1	State 2	State 3	State 4
241-Reinforced Concrete Culvert		Linear Foot	2	822	813	4	5	

Env* = Environment

Defects

Element	Defect	State 2	State 3	State 4
241-Reinforced Concrete Culvert	Delamination/Spall/Patched Area	2		
241-Reinforced Concrete Culvert	Scour		5	
241-Reinforced Concrete Culvert	Exposed Rebar	2		

Maintenance Items

Activity	Work Quantity	Priority	Location	Inspection Date	Completion Date	Comments
550 - EROSION CONTROL (PERSON HOURS)		B	Inlet end	01/06/2016		Repair scour on inlet and behind both wingwalls on inlet end.

NBIS Condition Codes

Culvert Condition: 7 - Good Condition
Underwater Condition: N - Not Applicable
Scour Condition: 5 - Fair Condition
Waterway Adequacy: 8-Bridge deck above roadway approaches. Slight chance of overtopping roadway approaches.
Channel Protection: 5-Bank protection is being eroded. River control devices and /or embankment have major damage.

No Underwater Inspection performed on this culvert.

Culvert Waterway Report

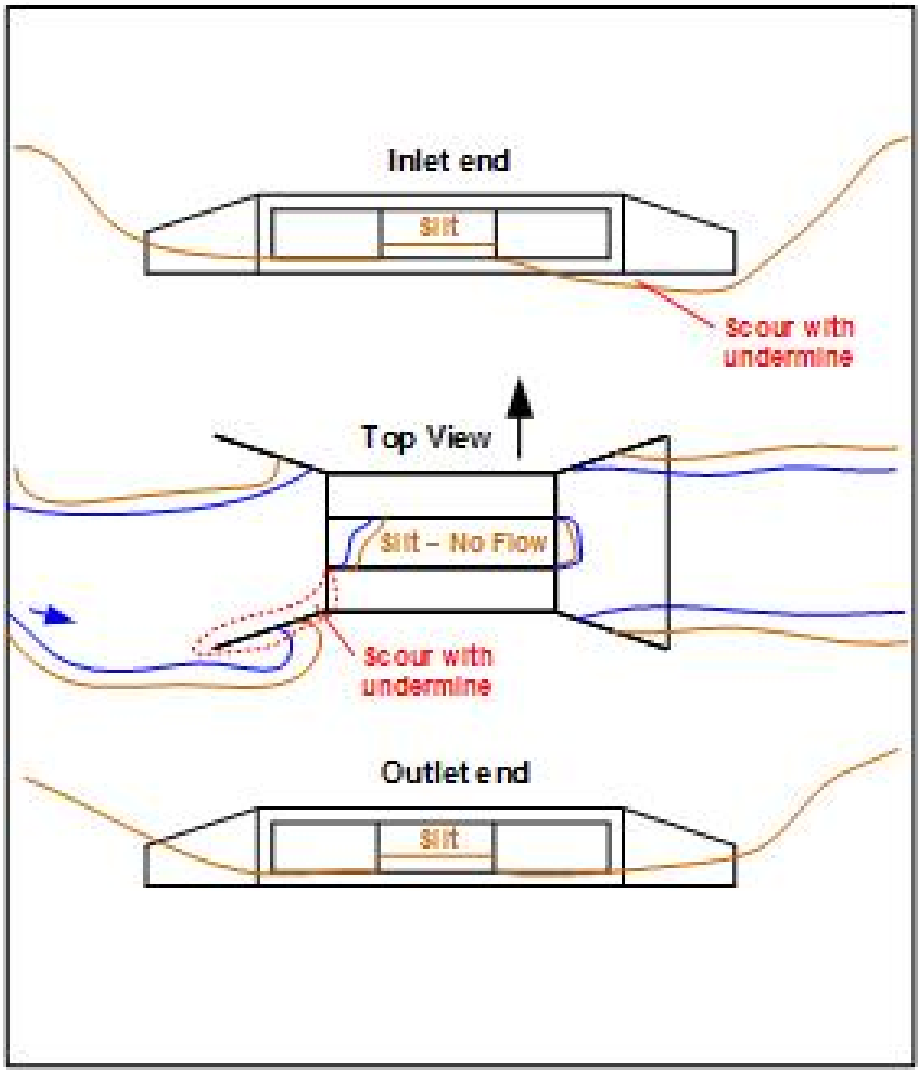

Bridge Height Location	UPSTREAM
Bridge Height (Ft)	7.8
Water Depth (Ft)	3.2
Stream Velocity	Moderate
Channel Soil Type	Sand
Scour Critical	8. Foundation stable for conditions; scour above footing
Slope Protection	0- None

Photographs

Roadway.JPG

Taken with inventory

COVER_PHOTO.JPG

Inlet End

Side View.JPG

Outlet End

P1060080.JPG

Scoured out behind wingwall

Photographs

Left Rear Wingwall Scour - 1.JPG

Scour at wing walls

Left Rear Wingwall Scour - 2.JPG

Scour at wing walls

Left Rear Wingwall Scour - 3.JPG

Scour at wing walls

Georgia Department of Transportation

Bridge Inspection Report

District: 4841100000 - D1 DISTRICT **Inspection Area:** 7 **County:** Gwinnett
Location ID: 135-00316D-010.58E **Over:** CSX RAILROAD
Structure ID: 135-0098-0 **Road Name:** SR 316 (EBL)
Bridge Information: 6-Revised inventory or operating ratings; load limits

Georgia Department of Transportation

Evaluation

Topside Inspection Team **Inspection Type:** General **Inspection Date:** 10/18/2017

Team Leader: Joshua M. Cofer

Assistants: Dana McCrary

Deck

NBIS Condition 6 - Satisfactory Condition **Material:** O. Concrete

Deck Wearing Surface Type: 1. Concrete

8.25" Concrete deck with stay in place concrete forms. 20* skew.

Patch in Span 1 at bent 2 left with exposed rebar. Repaired
All joints are leaking.
There are concrete diaphragms on 90* to beams at mid span.

Superstructure

NBIS Condition 7 - Good Condition **Material:** O. Concrete **Year Painted:**

Paint Type : 0- Not Applicable **Temperature (F):**

3 Simple spans pre-stressed concrete I-beams (TYPE 3) on 8.0' center to center.
Span 2 beam 1, 3, and 4 have shallow spalls with exposed rebar in bottom.

Substructure

NBIS Condition 7 - Good Condition **Material:** O. Concrete **Year Painted:** 0000

Paint Type : 0- Not Applicable

Abutments 1 and 4 are concrete caps with minor cracks.
Bents 2 and 3 are concrete caps with 2-36"x36" columns.

Bent 2 cap forward under beam 6 minor pop-out due to shy cover.
Bent 2 column 1 has spall forming on the forward face has shallow junk steel spall..

General

This Bridge:

Built in 1982.Project # TQF-108-1(9)

Conditional Situations

Confined Space: No **Traffic Control Needed:** No

Equipment Used

Access Equipment: None **Topside Boat:** None

Waders: None **Special Imaging Device:** None

District: 4841100000 - D1 DISTRICT **Inspection Area:** 7 **County:** Gwinnett
Location ID: 135-00316D-010.58E **Over:** CSX RAILROAD
Structure ID: 135-0098-0 **Road Name:** SR 316 (EBL)

Load Rating and Posting

Truck Type	Gross/H-Modified	HSModified	Tandem	3-S-2	Log	Piggy
Calculated Posting	21	30	33	40	37	40
Posting Required	No	No	No	No	No	No
Existing Posting	00	00	00	00	00	00

Item 103 Temporarily Shored : No **Posting Required:** No
Item 41 - Structure Open, Posted or Closed: A. Open, no restriction

Element Data

Element	Parent Element	Measurement Unit	Env*	Quantity	State 1	State 2	State 3	State 4
12-Reinforced Concrete Deck		SQUARE FEET	2	7237	7237			
109-P/S Conc Open Girder/Beam		Linear Foot	2	996	990	6		
205-Reinforced Conc Column		Each	2	4	3	1		
215-Reinforced Conc Abutment		Linear Foot	2	91	80	11		
234-Reinforced Conc Pier Cap		Linear Foot	2	94	94			
301-Pourable Joint Seal		Linear Foot	2	164	0		164	
310-Elastomeric Bearing		Each	2	36	36			
321-Reinforced Concrete Approach Slab		SQUARE FEET	2	2616	2616			
331-Reinforced Concrete Bridge Railing		Linear Foot	2	224	224			

Env* = Environment

Defects

Element	Defect	State 2	State 3	State 4
109-P/S Conc Open Girder/Beam	Delamination/Spall/Patched Area	6		
205-Reinforced Conc Column	Delamination/Spall/Patched Area	1		
215-Reinforced Conc Abutment	Cracking (RC and Other)	11		
301-Pourable Joint Seal	Leakage		164	

Maintenance Items

Activity	Work Quantity	Priority	Location	Inspection Date	Completion Date	Comments
800 - BRIDGE JOINT SEALING (LINEAR FEET)		B	Deck and approach joints	10/27/2015		Clean and seal joints.

No Specialized Inspection performed on this bridge.

No Other Special Inspection performed on this bridge.

No Fracture Critical Inspection performed on this bridge.

Bridge Components

Superstructure Data

Span #	Beam Type	Beam Spacing	Length	# Beams	Remarks
1	PSC "I" Beam	8	47	6	Type 3
2	PSC "I" Beam	8	60	6	Type 3
3	PSC "I" Beam	8	59	6	Type 3

Bearing Data

Span #	Rear Type Bearing	Forward Type Bearing	Remarks
1	03-Elastomeric	03-Elastomeric	
2	03-Elastomeric	03-Elastomeric	
3	03-Elastomeric	03-Elastomeric	

This bridge has no intersected feature.

No Underwater Inspection performed on this bridge.

District: 4841100000 - D1 DISTRICT **Inspection Area:** 7 **County:** Gwinnett
Location ID: 135-00316D-010.58E **Over:** CSX RAILROAD
Structure ID: 135-0098-0 **Road Name:** SR 316 (EBL)

Waterway Information

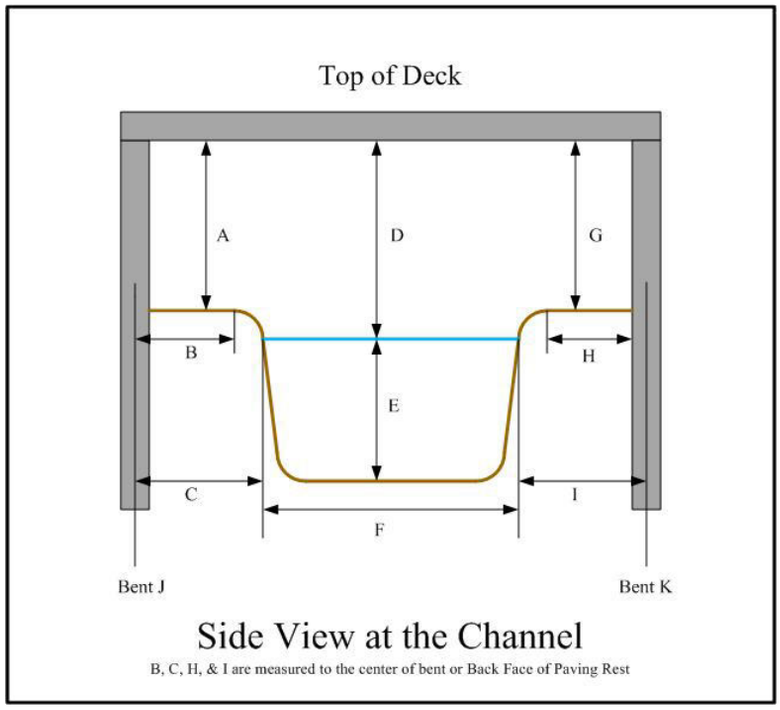

A :
B :
C :
D : 00.0
E : 00.0
F :
G :
H :
I :
J :
K :

Location of Bridge Height :
Bridge Height Taken:
Scour Condition : N
Waterway Adequacy : N
Channel Protection : N

Comments :

Substructure Skew = **Channel Skew =** **Stream Angle =**

Collision Information

Beam Type :

Span # with Beam Damage :

Total # of Beams in Span :

# of Damaged Beams :

Minimum Vertical Clearance : ft - in

Actual Vertical Clearance at Point of Impact : ft - in

Posted Vertical Clearance : ft - in

Report Type :

Report Date :

Damage Location in Span :

Damage Type :
Damage Details :

Repairs Required : No **Repairs Made :** No
Repair Details :

Additional Comments :

Photographs

COVER_PHOTO.JPG

Left rear

Typical Joint Condition.JPG

Pulling loose and leaking

Typical Superstructure.JPG

Span 2 at bent 3

Roadway.JPG

Looking East.

Georgia Department of Transportation

Bridge Inspection Report

District: 4841100000 - D1 DISTRICT **Inspection Area:** 7 **County:** Gwinnett
Location ID: 135-00316D-010.59E **Over:** CSX RAILROAD
Structure ID: 135-0099-0 **Road Name:** SR 316 (WBL)
Bridge Information: 6-Revised inventory or operating ratings; load limits

Georgia Department of Transportation

Evaluation

Topside Inspection Team **Inspection Type:** General **Inspection Date:** 10/18/2017

Team Leader: Joshua M. Cofer

Assistants: Dana McCrary

Deck

NBIS Condition 6 - Satisfactory Condition **Material:** O. Concrete

Deck Wearing Surface Type: 1. Concrete

8.25" Concrete deck with stay in place concrete forms.
20* skew

Spans 1 and 3 have thin layer of grout in several areas peeling off with exposed rebar in span 3.
Minor longitudinal and transverse cracks.
There is a minor spall at the deck joint at bent 3.
Deck surface in span 3 has several spalls and minor scaling throughout.
All deck joints are pulling loose and leaking.

Superstructure

NBIS Condition 7 - Good Condition **Material:** O. Concrete **Year Painted:** 0000

Paint Type : 0- Not Applicable **Temperature (F):**

3 Simple spans with 6 pre-stressed concrete I-beams each (TYPE 3) 8.0' center to center.
Concrete diaphragms at mid span on 90 degrees to beams.

Span 1 beam 1 has shallow spall with rebar exposed due to shy cover.

Substructure

NBIS Condition 7 - Good Condition **Material:** O. Concrete **Year Painted:** 0000

Paint Type : 0- Not Applicable

Abutment 1 and 4 are concrete caps.
Bents 2 and 3 are concrete caps with 2-36"x36" columns each.

Both abutments have minor cracks at step downs.
Bent 2 cap left bottom has crack spall.
Minor crack spalls on Bent 3 cap on the right rear face, and forward face in the center.

General

This Bridge:

1962- 3 Span concrete bridge.
Project # TQF-108-1(9)

Rear approach slab has minor cracking.
Approach slab joints are pulling loose and leaking.

Conditional Situations

Confined Space: No **Traffic Control Needed:** No

Equipment Used

Access Equipment: None **Topside Boat:** None

Waders: None **Special Imaging Device:** Binoculars

District: 4841100000 - D1 DISTRICT **Inspection Area:** 7 **County:** Gwinnett
Location ID: 135-00316D-010.59E **Over:** CSX RAILROAD
Structure ID: 135-0099-0 **Road Name:** SR 316 (WBL)

Load Rating and Posting

Truck Type	Gross/H-Modified	HSModified	Tandem	3-S-2	Log	Piggy
Calculated Posting	21	30	30	40	37	40
Posting Required	No	No	No	No	No	No
Existing Posting	00	00	00	00	00	00

Item 103 Temporarily Shored : No **Posting Required:** No
Item 41 - Structure Open, Posted or Closed: A. Open, no restriction

Element Data

Element	Parent Element	Measurement Unit	Env*	Quantity	State 1	State 2	State 3	State 4
12-Reinforced Concrete Deck		SQUARE FEET	2	7281	7235	42	4	
109-P/S Conc Open Girder/Beam		Linear Foot	2	1002	1001	1		
205-Reinforced Conc Column		Each	2	4	4			
215-Reinforced Conc Abutment		Linear Foot	2	88	88			
234-Reinforced Conc Pier Cap		Linear Foot	2	88	81	7		
301-Pourable Joint Seal		Linear Foot	2	164	0		164	
310-Elastomeric Bearing		Each	2	36	36			
321-Reinforced Concrete Approach Slab		SQUARE FEET	2	2616	2616			
331-Reinforced Concrete Bridge Railing		Linear Foot	2	334	334			

Env* = Environment

Defects

Element	Defect	State 2	State 3	State 4
109-P/S Conc Open Girder/Beam	Delamination/Spall/Patched Area	1		
12-Reinforced Concrete Deck	Delamination/Spall/Patched Area		4	
12-Reinforced Concrete Deck	Exposed Rebar	2		
12-Reinforced Concrete Deck	Abrasion/Wear (PSC/RC)	40		
234-Reinforced Conc Pier Cap	Cracking (RC and Other)	7		
301-Pourable Joint Seal	Leakage		164	

Maintenance Items

Activity	Work Quantity	Priority	Location	Inspection Date	Completion Date	Comments
810 - DECK REPAIR (SQUARE FEET)		B	Rear and forward approach.	10/27/2015		Repair deck.
800 - BRIDGE JOINT SEALING (LINEAR FEET)		B	All joints.	10/27/2015		Clean and seal joints.

No Specialized Inspection performed on this bridge.

No Other Special Inspection performed on this bridge.

No Fracture Critical Inspection performed on this bridge.

Bridge Components

Superstructure Data

Span #	Beam Type	Beam Spacing	Length	# Beams	Remarks
1	PSC "I" Beam	8	47	6	Type 3
2	PSC "I" Beam	8	60	6	Type 3
3	PSC "I" Beam	8	60	6	Type 3

Bearing Data

Span #	Rear Type Bearing	Forward Type Bearing	Remarks
1	03-Elastomeric	03-Elastomeric	
2	03-Elastomeric	03-Elastomeric	
3	03-Elastomeric	03-Elastomeric	

This bridge has no intersected feature.

No Underwater Inspection performed on this bridge.

District: 4841100000 - D1 DISTRICT **Inspection Area:** 7 **County:** Gwinnett
Location ID: 135-00316D-010.59E **Over:** CSX RAILROAD
Structure ID: 135-0099-0 **Road Name:** SR 316 (WBL)

Waterway Information

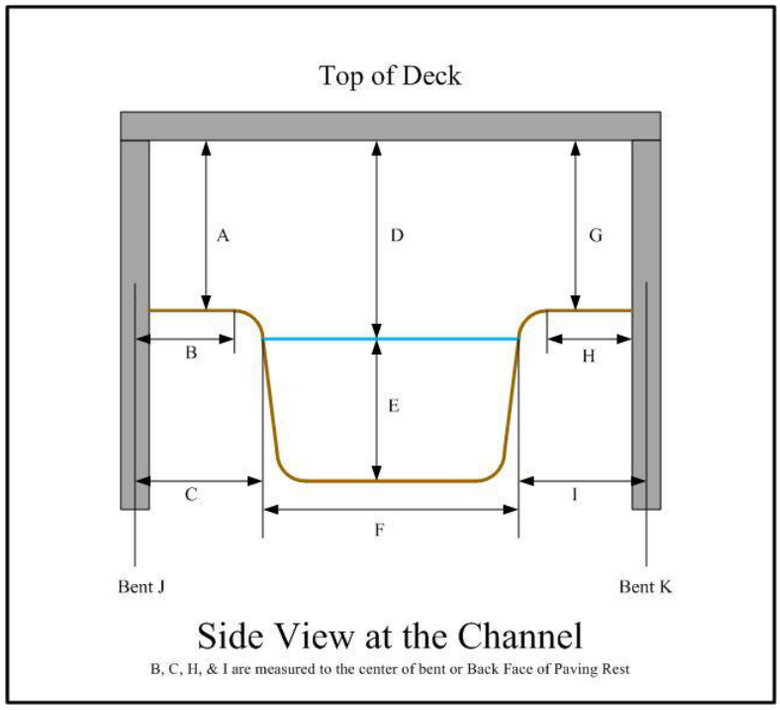

A :
B :
C :
D : 00.0
E : 00.0
F :
G :
H :
I :
J :
K :

Location of Bridge Height :
Bridge Height Taken:
Scour Condition : N
Waterway Adequacy : N
Channel Protection : N

Comments :

Substructure Skew = **Channel Skew =** **Stream Angle =**

Collision Information

Beam Type :

Span # with Beam Damage :

Total # of Beams in Span :

# of Damaged Beams :

Minimum Vertical Clearance : ft - in

Actual Vertical Clearance at Point of Impact : ft - in

Posted Vertical Clearance : ft - in

Report Type :

Report Date :

Damage Location in Span :

Damage Type :
Damage Details :

Repairs Required : No **Repairs Made :** No
Repair Details :

Additional Comments :

Photographs

135-0099-0-53.JPG

1" Diameter Abutment 4 right

COVER_PHOTO.JPG

Taken from right rear

Typical Superstructure.JPG

Span 2 / Bent 3

Roadway.JPG

Taken with inventory

Typical Joint Condition.JPG

Pulling loose and leaking

Attachment 12

MS4 Concept Report Summary

MS4 Concept Report Summary

Attach the following checklist information to the Concept Report Template:

Is there a Project Level Exclusion that applies to this project: ☒ No ☐ Yes

If yes, please indicate which of the following exclusions apply:

- ☐ Roadways that are not owned or operated (maintained) by GDOT may not require post-construction BMPs. Coordinate with the appropriate local government or entity to determine stormwater management requirements.
- ☐ The project location is not within a designated MS4 area.
- ☐ Maintenance and safety improvement projects whereby the sites are not connected and disturbs less than one acre at each individual site. This includes projects such as repaving, shoulder building, fiber optic line installation, sign addition, and sound barrier installation.
- ☐ Projects that have their environmental documents approved or right-of-way plans submitted for approval on or before June 30th, 2012.
- ☐ Road projects that disturb less than 1 acre or for site development projects that add less than 5,000 ft^2 of impervious area.

If the project has a Project Level Exclusion nothing further is needed.

If the project does not have a Project Level Exclusion use the MS4 Concept Level Design Spreadsheet to estimate the treatment volumes and flow rates, size the BMP's, complete the tables below, and include as an attachment to the Concept Report. Add additional rows, if necessary. It is understood that this information will be approximate based on available information at the time of the concept.

In MS4 designated areas, water quantity requirements may be waived for drainage areas that flow directly into surface waters that have a drainage area greater than 5 square miles.

Drainage Area Summary									
	Pre-Development			Post-Development			Water Quality Volume (Cubic Feet)	Channel Protection Volume (Cubic Feet)	Required Detention Volume (Cubic Feet)
Outfall Area	Tc	Weighted CN	Area (Acres)	Tc	Weighted CN	Area (Acres)			
1	6	69	1.47	6	70	1.52	181	430	2598
2	9	70	2.73	12	68	3.11	0	102	5260
3	17	69	4.32	17	70	4.09	355	50	4241
4	14	66	6.14	11	68	6.20	1,453	2,254	10300
4-Off	14	57	4.04	14	57	4.04	0	0	0
5	15	62	16.08	9	66	16.03	4,467	9,779	31,746
5-Off	18	73	18.39	18	73	18.39	0	0	0
6	14	65	25.20	20	72	28.32	13,042	42,581	85,851
6-Off	21	60	14.44	20	60	14.44	0	0	0
7	21	64	58.92	21	70	55.54	14,779	49,089	125,675
7-Off	31	82	238.85	30	82	238.77	0	0	0
8	16	60	12.29	9	66	13.31	4,609	13,551	33,614
9	10	67	1.97	5	73	1.43	0	144	0
10	12	71	4.67	11	71	4.63	188	0	5685
11	7	65	12.22	6	68	15.35	1,916	15068	41735
12	5	56	2.26	5	66	2.05	1354	2608	5015
13	9	61	10.35	5	69	11.33	5552	16160	33009
14	5	55	1.25	5	71	1.10	1,513	0	3,724
15	5	74	1.40	5	70	2.09	0	1,118	5,852
16	12	64	3.75	9	75	6.69	8059	19967	35148
17	9	62	5.40	7	78	6.88	9512	23361	33888
18	9	65	10.10	6	67	10.19	37	3,561	16,479
19	11	57	2.11	9	64	1.60	827	0	1685
20	11	65	7.91	10	69	8.87	1,823	8,280	22,163
21	11	57	9.93	10	73	11.45	13020	31139	49855
22	12	59	2.71	5	64	1.58	543	0	0
23	5	76	1.45	5	91	1.11	1,205	3,045	2,890
24	5	81	2.52	5	82	2.36	4	0	2778
25	13	55	3.49	13	65	3.63	3,300	4,998	10,494
26	7	71	1.13	7	71	1.19	0	0	2,013
27	8	63	4.80	10	72	8.97	9,116	22,468	43,787
28	11	60	6.85	5	66	4.38	2,078	0	0
29	5	89	2.21	5	86	2.34	0	0	4264
30	5	84	2.10	5	84	2.28	1364	1154	5856
31A	19	65	1.80	19	66	1.56	340	0	177
31B	12	73	2.57	12	74	2.31	503	0	1271

BMP Selection and Feasibility Summary						
	Outfall Level Exclusion?			Is the BMP Feasible?		
Outfall Area	Y/N	Exclusion No.	BMP Selected	Y/N	Infeasibility Criteria No.	[1]Feasibility of an Infiltration BMP
1	Y	6	-	-	-	-
2	Y	6	-	-	-	-
3	Y	6	-	-	-	-
4	Y	6	-	-	-	-
4-OFF	Y	5	-	-	-	-
5	Y	6	-	-	-	-
5-Off	Y	5	-	-	-	-
6	N	-	GC / DDP	Y	-	-
6-Off	Y	5	-	-	-	-
7	N	-	WDP	Y	-	
7-Off	Y	5	-	-	-	-
8	N	-	GC / DDP	Y	-	-
9	Y	6	-	-	-	-
10	Y	6	-	-	-	-
11	N	-	GC / DDP	Y	-	-
12	Y	6	-	-	-	-
13	N	-	GC / DDP	Y	-	-
14	Y	6	-	-	-	-
15	Y	6	-	-	-	-
16	N	-	GC / DDP	Y	-	-
17	N	-	GC / DDP	Y	-	-
18	Y	6	-	-	-	-
19	Y	6	-	-	-	-
20	N	-	GC / DDP	Y	-	-
21	N	-	WDP	Y	-	-
22	Y	6	-	-	-	-
23	Y	6	-	-	-	-
24	Y	6	-	-	-	-
25	N	-	GC / DDP	N	1 – Cost	-
26	Y	6	-	-	-	-
27	N	-	GC / DDP	Y	-	-
28	Y	6	-	-	-	-
29	Y	6	-	-	-	-
30	N	-	GC	N	7 – Site Limitations	-
			DDP	Y	-	-
31A	Y	6	-	-	-	-
31B	Y	6	-	-	-	-

1 - For outfall areas considering an infiltration BMP indicate if an infiltration BMP is well-suited, potentially suitable, has limited suitability, or is unsuitable for the outfall area.

Abbreviations:

DES – Dry Enhanced Swale
GC – Grass Channel
BR – Bioretention Basin
DDP – Dry Detention Pond
WDP – Wet Detention Pond

In addition to the above charts, attach the Drainage Area Map, drainage basin summary spreadsheets, and cost estimates (if required) to the Concept Report. For outfall areas considering an infiltration BMP, attach Worksheet J-1. See Appendix J of the GDOT Drainage Design for Highways Manual (Drainage Manual).

Drainage Basin Maps

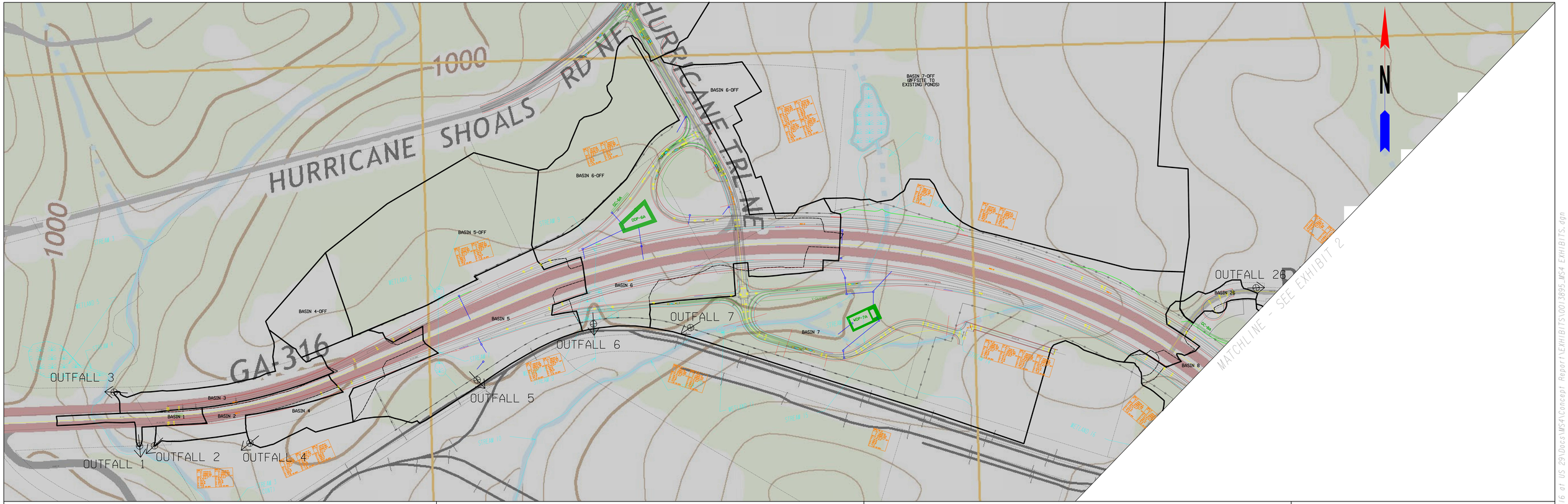

PRE-DEVELOPED DRAINAGE AREA

POST-DEVELOPED DRAINAGE AREA

STREAM / WETLANDS

MS4 DRAINAGE AREA EXHIBIT 1

SR 316 FROM HURRICANE TRAIL TO WINDER HWY/US 29/SR 8

PI#0013985, 0013896, 0013897

SCALE IN FEET

0 300 600 1200

ATKINS

H:\GW\NSR 316 of US 29\Docs\MS4\Concept Report\EXHIBITS\0013895_MS4 EXHIBITS.dgn

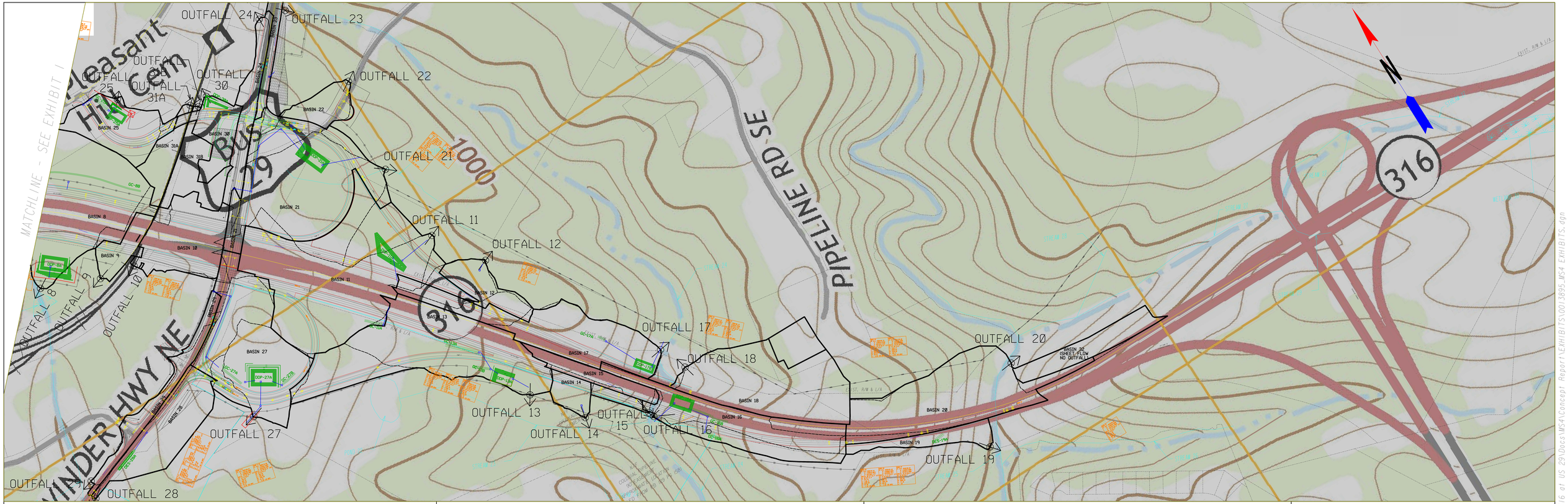

PRE-DEVELOPED DRAINAGE AREA

POST-DEVELOPED DRAINAGE AREA

STREAM / WETLANDS

MS4 DRAINAGE AREA EXHIBIT 2

SR 316 FROM HURRICANE TRAIL TO WINDER HWY/US 29/SR 8

PI#0013985, 0013896, 0013897

SCALE IN FEET

0 300 600 1200

ATKINS

H:\GW\NSR 316 of US 29\Docs\MS4\Concept Report\EXHIBITS\0013895_MS4 EXHIBITS.dgn

Attachment 13

Pavement Evaluation Summary

PAVEMENT EVALUATION SUMMARY
For
Gwinnett County, Georgia
PI NOs. 0013895, -96, -97

1. LOCATION / DESCRIPTION

This work consisted of the evaluation of the existing roadways and shoulders for the reconstruction along SR 316, CR 1996, CR 1993, CR 202 and SR 8. Reconstruction involves modifications to the intersections at SR 316 with CR 1996 and SR 8, which includes construction of bridges over SR 316 at the two intersections and providing controlled ingress and egress to the modified roadways.

The total length of this project is approximately 4.92 linear miles.

The project lies west of the city limits of Dacula in Gwinnett County within the following station limits.

Station to Station	Location
213+20.10± to 406+72.49± MP 8.87± to MP 12.45± (231+00± to 233+00±)*	SR 316/ University Parkway *(Evaluated Section)
103+73.42± to 118+00±	CR 1996/ Hurricane Trail NE
341’ west to 379’ east of intersection with CR 1996	CR 1993/ Hurricane Shoals Road NE
Intersection with Fence Road Connector	CR 202/ Fence Road
107+53.66± to 151+23.26± MP 17.80± to MP 18.63±	SR 8/ US 29/ Winder Highway
Throughout the Project Limits	Side Roads

625 Holcomb Bridge Road, Norcross, GA 30071 • 770-209-0029 • unitedconsulting.com

We’re here for you.

2. PAVEMENT CONDITION SUMMARY

The following is a brief summary of the pavement condition for the roads within the construction limits. The condition descriptions are based on the visual observations, pavement distresses within the CoPACES database, and core conditions at the time of this pavement evaluation. The pavement distresses and core conditions from this evaluation are summarized in ***Section 6 "Pavement Distresses"*** and ***Section 8 "Cores"*** of this report.

SR 316
The existing pavement for SR 316 is in poor to good condition.

CR 1996
The existing pavement for CR 1996 is in poor to fair condition.

CR 1993
The existing pavement for CR 1993 is in good condition.

CR 202
The existing pavement for CR 202 is in fair to good condition.

SR 8
The existing pavement for CS 1517 is in fair to good condition.

Side Roads
The existing conditions for the side roads (**Stars and Strikes Plaza)** ranged from poor to fair condition.

625 Holcomb Bridge Road, Norcross, GA 30071 • 770-209-0029 • unitedconsulting.com

We're here for you.

3. PAVEMENT RECOMMENDATION SUMMARY

The following types of construction are recommended for these projects.

Table 1: Pavement Construction Type [A]			
Road	**Station to Station**	**Description**	**Type of Construction**
SR 316 University Parkway	213+20.10± to 406+72.49± MP 8.87± to MP12.45±	Existing	Full Depth Construction for ramps ingress and egress.
SR 316 Ramps	Varies with location.	New Construction	Full Depth Construction for ramps.
CR 1996 Hurricane Trail NE	103+73.42± to 118+00±	Existing	Full Depth Construction for Widening & Rehabilitation.
CR 1993 Hurricane Shoals Road NE	TBD, 341' west to 379' east of intersection with CR 1996	Existing	Mill/ Overlay for Rehabilitation. Full Depth Construction for Widening.
CR 202 Fence Road	TBD, Intersection with Fence Road Connector	Existing	Full Depth Construction for Widening & Rehabilitation.
CR 202 Fence Road Connector	9+16.28± to 21+00±	New Construction	Full Depth Construction
SR 8 US 29/ Winder Highway	107+53.66± to 151+23.26± MP 17.80± to MP 18.63±	Existing	Mill/ Overlay for Rehabilitation. Full Depth Construction for Widening.
Side Roads	Stars and Strikes Plaza (2-3 locations), Sugarloaf Parkway (CR 6512)	Existing	Mill/ Inlay for Rehabilitation for Stars and Strikes Plaza. No rehabilitation for Sugarloaf Parkway anticipated.

[A] Notations:

- Full Depth Construction = Widening, existing and/ or new roadway and/or alignment.
- TBD = To Be Determined.

625 Holcomb Bridge Road, Norcross, GA 30071 • 770-209-0029 • unitedconsulting.com

We're here for you.

4. FULL-DEPTH SECTIONS

The following full-depth pavement structures are recommended for use on these projects.

Table 2: Full Depth Rigid Pavement Design [A, B]

(SR 316 – Mainline - Rigid)			
PAY ITEM NUMBER	**MATERIAL**	**COURSE**	**THICKNESS**
430-0220	P.C.C.	Surface	12.00 inches
402-3190	19 mm Superpave	Binder	3.00 inches
310-1101	Graded Aggregate Base	Base	10.00 inches

[A]-Proposed pavement is 2.11% under-designed for 2024-2044.
[B]-Proposed pavement is 2.50% under-designed for 2026-2046.

Table 3: Full Depth Rigid Pavement Design [A, B]

(SR 316 – Ramps - Rigid)			
PAY ITEM NUMBER	**MATERIAL**	**COURSE**	**THICKNESS**
430-0200	P.C.C.	Surface	10.00 inches
402-3190	19 mm Superpave	Binder	3.00 inches
310-1101	Graded Aggregate Base	Base	10.00 inches

[A]-Proposed pavement is 3.62% underr-designed for 2024-2044.
[B]-Proposed pavement is 4.15% under-designed for 2026-2046.

Table 4: Alternative Full Depth Flexible Pavement Design [A, B]

(SR 316 – Flexible - Alternative)				
PAY ITEM NUMBER	**MATERIAL**	**COURSE**	**THICKNESS**	**SPREAD RATE**
400-3206	12.5 mm OGFC, PM	Surface	90 lbs./yd^2	90 lbs./yd^2
402-3600	12.5 mm SMA, PM	Surface	1.50 inches	165 lbs./yd^2
402-3190	19 mm Superpave	Binder	2.00 inches	220 lbs./yd^2
402-3121	25 mm Superpave	Asphalt Base	10.00 inches	1,110 lbs./yd^2
310-1101	Graded Aggregate Base	Base	12.00 inches	N/A

[A]-Proposed pavement is 1.30% under-designed for 2024-2044.
[B]-Proposed pavement is 1.53% under-designed for 2026-2046.

Table 5: Alternative Full Depth Flexible Pavement Design [A, B]

(SR 316 – Ramps – Flexible - Alternative)				
PAY ITEM NUMBER	**MATERIAL**	**COURSE**	**THICKNESS**	**SPREAD RATE**
402-3130	12.5 mm Superpave	Surface	1.50 inches	165 lbs./yd^2
402-3190	19 mm Superpave	Binder	2.00 inches	220 lbs./yd^2
402-3121	25 mm Superpave	Asphalt Base	7.00 inches	770 lbs./yd^2
310-1101	Graded Aggregate Base	Base	12.00 inches	N/A

[A]-Proposed pavement is 5.06% under-designed for 2024-2044.
[B]-Proposed pavement is 5.18% under-designed for 2026-2046.

625 Holcomb Bridge Road, Norcross, GA 30071 • 770-209-0029 • unitedconsulting.com

We're here for you.

Table 6: Full Depth Flexible Pavement Design [A, B]

(SR 8/ US 29 - Mainline)				
PAY ITEM NUMBER	**MATERIAL**	**COURSE**	**THICKNESS**	**SPREAD RATE**
402-4510	12.5 mm Superpave PM [C]	Surface	1.50 inches	165 lbs./yd^2
402-3190	19 mm Superpave	Binder	2.00 inches	220 lbs./yd^2
402-3121	25 mm Superpave	Asphalt Base	6.00 inches	660 lbs./yd^2
310-1101	Graded Aggregate Base	Base	10.00 inches	N/A

[A-]Proposed pavement is 9.64% under-designed for 2024-2044.
[B-]Proposed pavement is 9.76% under-designed for 2026-2046.
[C-]ADTT exceeded 2,500, Polymer Modified recommended.

Table 7: Full Depth Flexible Pavement Design [A, B]

(CR 1996, CR 1993 and CR 202 - Mainline)				
PAY ITEM NUMBER	**MATERIAL**	**COURSE**	**THICKNESS**	**SPREAD RATE**
402-3130	12.5 mm Superpave	Surface	1.50 inches	165 lbs./yd^2
402-3190	19 mm Superpave	Binder	2.00 inches	220 lbs./yd^2
402-3121	25 mm Superpave	Asphalt Base	4.00 inches	440 lbs./yd^2
310-1101	Graded Aggregate Base	Base	10.00 inches	N/A

[A-]Proposed pavement is 6.54% under-designed for 2024-2044.
[B-]Proposed pavement is 6.83% under-designed for 2026-2046.

Table 8: Temporary Full Depth Flexible Pavement Design [A, B]

(Temporary SR 316 – Mainline, if needed)				
PAY ITEM NUMBER	**MATERIAL**	**COURSE**	**THICKNESS**	**SPREAD RATE**
402-3130	12.5 mm Superpave	Surface	1.50 inches	165 lbs./yd^2
402-3190	19 mm Superpave	Binder	2.00 inches	220 lbs./yd^2
402-3121	25 mm Superpave	Asphalt Base	4.00 inches	440 lbs./yd^2
310-1101	Graded Aggregate Base	Base	8.00 inches	N/A

[A-]Proposed pavement is 12.69% under-designed for 2022-2025.
[B-]Proposed pavement is 13.20% under-designed for 2024-2027.
Base material to be retained as needed.

Table 9: Temporary Full Depth Flexible Pavement Design [A, B]

(Temporary SR 8, CR 1996, CR 1993 and CR 202, if needed)				
PAY ITEM NUMBER	**MATERIAL**	**COURSE**	**THICKNESS**	**SPREAD RATE**
402-3130	9.5 mm Superpave	Surface	1.25 inches	135 lbs./yd^2
402-3190	19 mm Superpave	Binder	2.00 inches	220 lbs./yd^2
402-3121	25 mm Superpave	Asphalt Base	3.00 inches	330 lbs./yd^2
310-1101	Graded Aggregate Base	Base	8.00 inches	N/A

[A-]Proposed pavement is 14.02% under-designed for 2022-2025.
[B-]Proposed pavement is 15.16% under-designed for 2026-2028.
Base material to be retained as needed.

Note: Temporary Pavement Designs are based on the guidelines from the Design Policy Manual, Chapter 10.

625 Holcomb Bridge Road, Norcross, GA 30071 • 770-209-0029 • unitedconsulting.com

We're here for you.

5. OVERLAY SECTIONS

We recommend that the existing pavement along the following roadway be milled and inlayed/ overlaid to remove existing cracked asphalt as follows:

- **CR 1993 from 341' west to 379' east of intersection with CR 1996**. This section of roadway should be milled at a minimum of 1.25-inches. This section of the project should be overlaid as designed in Table 11 below.

- **SR 8 from MP 17.80± to MP 18.63±.** Due to new vertical alignment, portions of this roadway project will be removed. The remaining sections of this roadway project should be milled at a minimum of 1.50-inches. Note, additional deep milling or crack sealing may be required near MP 17.94. See Core 15, ***Section 8, "Cores",*** Table 13 below for additional details. This section of the project should be overlaid as designed in Table 11 below.

- **Stars and Strikes Plaza (2-3 locations).** Theses side road sections should be milled at a minimum of 1.25-inches. These sections of the project should be overlaid as designed in Table 12 below.

The following mill and overlay pavement structures is recommended for use on these projects along the following Station numbers.

Table 10: MILL AND OVERLAY DESIGN [A, B]

CR 1993 – Mainline (341' west to 379' east of intersection with CR 1996)				
Pay Item Number	**Material**	**Course**	**Thickness**	**Spread Rate**
402-3103	9.5 mm Type II Superpave	Surface	1.25 inches	138 lbs./yd^2
402-3190	19 mm Superpave	Binder	2.00 inches	220 lbs./yd^2
402-3121	25 mm Superpave	Asphalt Base	3.00 inches	330 lbs./yd^2

[A-]Proposed pavement is 1.80 % over-designed for 2024-2044.
[B-]Proposed pavement is 1.49 % over-designed for 2026-2046.

Table 11: MILL AND OVERLAY DESIGN [A, B]

SR 8 – Mainline (MP 17.80± to MP 18.63±)				
Pay Item Number	**Material**	**Course**	**Thickness**	**Spread Rate**
402-4510	12.5 mm Superpave Polymer Modified [C]	Surface	1.50 inches	165 lbs./yd^2
402-3190	19 mm Superpave	Binder	2.00 inches	220 lbs./yd^2

[A-]Proposed pavement is 9.91% under-designed for 2022-2042.
[B-]Proposed pavement is 10.02% under-designed for 2024-2044.
[C-]ADTT exceeded 2,500, Polymer Modified recommended.

625 Holcomb Bridge Road, Norcross, GA 30071 • 770-209-0029 • unitedconsulting.com

We're here for you.

Additional quantities should be set up for extra depth milling and leveling. In addition, deep patching of selected areas may be required to remove deteriorated concrete asphalt and/ or deep cracks. The GDOT asphalt leveling mix (Pay Item Number: 402-1812) should be used where needed, as needed.

Table 12: MILL AND INLAY DESIGN [A, B]

Stars and Strikes Plaza – Side Roads				
Pay Item Number	**Material**	**Course**	**Thickness**	**Spread Rate**
402-3103	9.5 mm Type II Superpave	Surface	1.25 inches	138 lbs./yd^2

[A-]Functional inlay, seal all remaining cracks with crack sealant.
[B-] 1.50 inches of 12.5mm Superpave Polymer Modified may be substituted.

See ***Section 10 "Additional Recommendations"*** and ***Section 11 "Assumptions and Justifications"*** section below.

6. PAVEMENT DISTRESSES

Except for the following, no other significant distresses were encountered along CR 1996, CR 1993, CR 202 and SR 8 during the field exploration of these projects:

Rutting

On **CR 1996,** the maximum rutting observed was ⅜ of an inch within the project limits.

On **CR 1993**, the maximum rutting observed was ⅛ of an inch within the project limits.

On **CR 202,** the maximum rutting observed was ⅛ of an inch within the project limits.

On **SR 8**, the maximum rutting observed was ⅛ of an inch within the project limits.

Load Cracking

On **CR 1996**, level 1 through level 4 load cracking were observed within the project limits.

On **CR 1993,** isolated level 1 load cracking was observed.

On **CR 202**, level 1 with occasional level 2 load cracking was observed.

On **SR 8**, level 1 load cracking was observed.

Block/ Transverse Cracking

On **CR 1996**, Level 1 and level 2 block/ transverse cracking were observed within the project limits.

On **CR 1993**, no visible signs of block/ transverse cracking were observed.

On **CR 202**, Level 1 and level 2 block/ transverse cracking were observed.

On **SR 8**, Level 1 block/ transverse cracking were observed.

625 Holcomb Bridge Road, Norcross, GA 30071 • 770-209-0029 • unitedconsulting.com

We're here for you.

Edge Distress On **SR 8,** isolated level 1 edge distress was observed at two locations along the northbound lane 1.

Raveling On **CR 1996, CR 1993, CR 202** and **SR 8**, minor raveling of the pavement surface was observed at isolated locations at the time of the pavement evaluation within the evaluated sections.

Corrugation/ Pushing On **SR 8**, corrugation/ pushing was observed at the time of the pavement evaluation near MP 17.94 (Station 115+00), SB, Lane 2 (Right Turn Lane).

Patches/ Pothole/ Base Failure On **CR 1996**, numerous patches and potholes were observed at the time of the pavement evaluation. The majority of these patches and potholes appeared to be associated with pavement distresses most likely from semi-trailer traffic.

Note: Visual asphalt pavement cracks are assumed to propagate at the rate of 1-inch/year.

7. CoPACES

CoPACES ratings are based on a visual survey of surface distress of the pavement. CoPACES data is not available for county roads and spot location; therefore, this information is not available from the CoPACES' database. To augment the ratings characterization of the county roads, we collected measurements from January 7 to January 18, 2019 using the criteria outlined in the ***Appendix E of the Pavement Design Manual***. The average ratings for the pavement sections on these projects are as follows:

- **CR 1996** from Station 103+73.42± to Station 118+00±, our rating for this road was 0, which indicated that this section was in poor condition.
- **CR 1993** from 341' west to 379' east of intersection with CR 1996 our rating for this road was 96, which indicated that this section was in good condition.
- **CR 202** from near the intersection with the proposed new roadway connector our rating for this road was 59, which indicated that this section was in poor condition.
- **SR 8** from Station 107+53.66± to Station 151+23.26± the CoPACES rating was 88, which indicated that this section was in good condition.

See ***Appendix F "Pavement Rating Section"*** for more details.

625 Holcomb Bridge Road, Norcross, GA 30071 • 770-209-0029 • unitedconsulting.com

We're here for you.

8. CORES

Cores were recovered from twenty-one (21) locations in the travel lanes of these projects to determine the thicknesses and condition of the existing pavement sections. The core lengths given in Table 13 are correct although the core lengths in the photographs in ***Appendix E*** may appear to be slightly different. The results of the coring operation are tabulated below:

Table 13: ASPHALT CORE PROPERTIES LENGTH/TYPE

Core/ Sample Number	Location/ Roadway/ MP/ GPS	Station/Direction/ Location	Core Length (inches)	Core Condition (From Top of Core)	Underlying Material Type/ Thickness
1	SR 316/ 9.22/ N33.98439 W83.95034	231+84 EB, LN 1, DW, 4.0' RT	14.50 Conc.	Poor. Vertically cracked from 0" to 9.25". Delaminated at 9.25". Multiple cracks in the surrounding area of the core.	Silty clay sand. (Moist soft soils)
2	SR 316/ 9.35/ N33.98458 W83.94817	238+65 EB, LN 2, PW, 19.0' RT	15.00 Conc.	Good. Delaminated at 8.50".	Silty clay sand. (Moist soft soils)
3	SR 316/ 10.69/ N33.98324 W83.92672	309+00 EB, LN 1, PW, 54.0' RT	14.50 Conc.	Good. Delaminated at 9.00".	Silty clay sand. (Moist soft soils)
4	SR 316/ 11.56/ N33.97422 W83.921613	355+00 EB, LN 2, PW, 18.0' RT	15.50 Conc.	Good. Delaminated at 10.25".	GAB=6.00"
5	SR 316/ 11.18/ N33.97794 W83.9209	335+00 WB, LN 2, PW, 19.0' LT	15.50 Conc.	Good. Delaminated at 10.50".	GAB=6.00"
6	SR 316/ 10.72/ N33.98299 W83.9261	311+00 WB, LN 1, DW, 56.0' LT	15.00 Conc.	Good. Delaminated at 10.25".	GAB=7.00"
7	CR 1996/ N33.98872 W83.93965	115+00 NB, LN 1, 10.0' LT	7.50 Asphalt	Poor. Vertically cracked from 0" to 7.50". Multiple cracks in the surrounding area of the core.	GAB=12.50"
8	CR 1996/ N33.98932 W83.93901	112+75 SB, LN 2 (RTL), 16.0' RT	7.00 Asphalt	Poor. Vertically cracked from 0" to 7.00". Multiple cracks in the surrounding area of the core.	GAB=12.00"
9	CR 1996/ N33.98994 W83.93946	110+00 NB, LN 2, PW, 18.0' LT	7.00 Asphalt	Poor. Vertically cracked from 0" to 7.00". Delaminated at 4.50". Multiple cracks in the surrounding area of the core.	GAB=12.00"

625 Holcomb Bridge Road, Norcross, GA 30071 • 770-209-0029 • unitedconsulting.com

We're here for you.

Table 13: ASPHALT CORE PROPERTIES LENGTH/TYPE					
Core/ Sample Number	**Location/ Roadway/ MP/ GPS**	**Station/Direction/ Location**	**Core Length (inches)**	**Core Condition (From Top of Core)**	**Underlying Material Type/ Thickness**
10	**CR 1996/ N33.98996 W83.93943**	**110+00 SB, LN 1, DW, 3.5' RT**	6.75 Asphalt	Poor. Vertically cracked from 0" to 6.75". Multiple cracks in the surrounding area of the core.	GAB=11.50"
11	**CR 1996/ N33.99108 W83.94033**	**105+00 SB, LN 2 (RTL), PW, 20.0' RT**	7.25 Asphalt	Good.	GAB=12.00"
12	**CR 1993/ N33.99099 W83.94129**	**341' West of CR 1996 WB, LN 1, PW, 9.0' LT**	7.50 Asphalt	Good.	Silty clay/ Gravel 5.00"
13	**CR 1993/ N33.99223 W83.9397**	**379' East of CR 1996 EB, LN 1, PW, 9.0' RT**	8.25 Asphalt	Fair to Good. Delaminated at 3.50". Minor air voids at 1.50" to 2.00".	Silty clay/ Gravel=5.50"
14	**SR 8/ 17.86/ N33.98095 W83.93106**	**111+00 NB, LN 1, PW, 10.0' RT**	12.00 Asphalt	Fair to Good. Delaminated at 5.00". Minor air voids at 2.00" to 3.00". Heavy asphalt at 9.50" to 11.00".	Conc.=5.00".
15	**SR 8/ 17.94/ N3398131 W83.92975**	**115+00 SB, LN 1, PW, 11.0' LT**	11.25 Asphalt	Poor. Vertically cracked from 0" to 6.00". Delaminated at 6.00" (1.00" layer of soil at delamination).	Silty clay sand. (Moist soft soils)
16	**SR 8/ 18.03/ N33.9818 W83.92823**	**120+00 NB, LTL, CL, 6.0' RT**	13.00 Asphalt	Good.	GAB=10.00"
17	**SR 8/ 18.26/ N33.98389 W83.92537**	**132+00 NB, LN 1, DW, 5.0' RT**	13.00 Asphalt	Good. Minor air voids between 2.00" to 3.00".	GAB=8.00" (Moist soft soils)
18	**SR 8/ 18.30/ N33.98444 W83.92497**	**134+00 SB, RTL2, PW, 35.0' LT**	9.00 Asphalt	Good. Minor air voids between 1.50" to 2.25".	GAB=5.00"
19	**SR 8/ 18.32/ N33.98473 W83.92474**	**135+00 SB, RTL1, PW, 23.5' LT**	7.75 Asphalt	Good. Minor air voids between 2.00" to 2.25".	GAB=11.25"
20	**SR8/ 18.51/ N33.98675 W83.9224**	**145+00 SB, LN 1, DW, 4.0' LT**	16.25 Asphalt	Fair to Good. Minor air voids between 1.00" to 3.00". Heavy tar between 9.00" to 15.00". Delaminated at 11.00".	Conc.=5.00" (Moist soft soils)
21	**SR 8/ 18.60/ N33.98757 W83.9213**	**150+00 NB, LN 1, PW, 8.5' RT**	8.00 Asphalt	Fair to Good. Minor air voids between 1.00" to 3.00". Delaminated at 3.00".	GAB=12.00"

625 Holcomb Bridge Road, Norcross, GA 30071 • 770-209-0029 • unitedconsulting.com

We're here for you.

Attachment 14

Minutes of Concept Meetings

Meeting Minutes

Project:	PI Nos. 0013895-0013897 SR 316 east of Cedars Road to west of Sugarloaf Parkway		
Subject:	Concept Team Meeting		
Date and time:	January 23, 2018 - 10:00 am		
Meeting place:	Gwinnett County:2nd Floor Conference Room	**Minutes by:**	SDS
Attendees:	See attached Sign in Sheet		

1. **Project Background**
    a. Overarching goal of the project is to create grade separations on SR 316 at Hurricane Trail and US 29/SR 8 Winder Highway by constructing future C-D (Collector-Distributor) system from Cedars Road to Harbins Road. The C-D system will operate as mainline SR 316 until such time that the system requires full build out. C-D lanes exist between Collins Hill Road and SR 20/Buford Drive.
    b. This project connects to PI Nos 0013893 & 0013894 to the west and the proposed interchange on Sugarloaf Parkway at SR 316 to the east. PI No 0013893 (Atkins design) is a potential grade separation at Hi Hope Road and SR 316. PI No 0013894 (Michael Baker design) is a potential grade separation at Cedars Road and SR 316. Both PI Nos 0013893 and 0013894 are in conceptual design and are waiting on notice to proceed to complete conceptual design.
    c. PI No 0013894 will coordinate with Gwinnett Airport to determine flight path restrictions and will need survey data to confirm if a potential grade separation is feasible at Cedars Road and SR 316.
    d. There is also a future GDOT Long-Range project on SR 316 to add general-purpose lanes in each direction on SR 316 from Collins Hill Road to Harbins Road. PI Nos 0013895-0013897 will be designed to accommodate the any future managed and general-purpose lanes on SR 316.
2. **Project Overview/Justification**
    a. The proposed project begins east of Cedars Road and extends to Sugarloaf Parkway, and proposes two grade-separated interchanges on SR 316 at the existing at-grade intersections of Hurricane Trail and US 29/SR 8 Winder Highway, and the closure of the at-grade intersection of Fence Road. The proposed project would construct future C-D roadways and utilize them as mainline SR 316 EB and WB until future traffic demands require construction of future thru lanes. The proposed project is State and County Funded. PI Nos 0013893 and 0013894 have separate schedule while PI Nos 0013895, 0013896 and 0013897 have one schedule and plan to be designed/let as one project
    b. The project proposes a design with US29/SR 8 over SR 316 as the preferred alternative.
    c. An alternative of SR 316 over US29/SR 8 was evaluated and five feet of cut was anticipated resulting in higher costs for earthwork, and the bridge lengths were longer compared to the preferred. Therefore, this option was not considered viable due to the increased construction costs.
    d. The preferred alternative will have substantial impacts to the QT in the northeast quadrant of SR 316 and US29/SR 8. GDOT Right of Way noted this will potentially be a displacement due to access constraints after construction. Gwinnett included the QT displacement in the conceptual right of way cost estimate for the project.
    e. Project costs were recently updated so the project will now require a Value Engineering study.

3. **Review of Concept Report/General Discussion**
    a. ITS/ATMS fiber is proposed along the project corridor and will connect to the Georgia Navigator and Gwinnett Fiber systems.
    b. The proposed concept would potentially impact the existing Gwinnett County Airport light at beginning of project. The group recommended reducing the horizontal alignment of the exit ramp from SR 316 so that right of way and impacts to the Gwinnett Airport light are eliminated. If the light is impacted, the Gwinnett County Airport requested driveway access be maintained

during construction. Even if the light is not impacted, driveway access must be maintained to the light during the project so that FAA can maintain the light to utilize runway 25.

c. Atkins will add FAA coordination to the concept report under the Environmental Section for the potential impacts to the Gwinnett County Airport.
d. GDOT Environmental requested all the projects on SR 316 be permitted together for 404 and other permits. GDOT environmental also noted that a GEPA Environmental Effects Report (EER) would likely be the document required. An EER would require a public hearing component and would need to be included in the public outreach plan for the projects.
e. GDOT Environmental recommended communicating with the USACE on how the projects will be grouped for permitting and the proposed plan or timing for construction if each project is let separately. GDOT Environmental also suggested coordinating and communicating the potential impacts of all projects being under construction at same time.
f. Atkins will change PAR to yes in the concept report since it likely will be required if the projects are grouped together.
g. GDOT Environmental recommend holding the A3M meeting prior to assessment of effects.
h. There are two natural gas lines (16-inch and 24-inch, Williams Natural Gas). The gas lines are located within the project limits near the Hurricane Trail intersection. No relocations are anticipated. Casings will be provided for new roadway locations over existing gas lines. GDOT construction recommended flagging locations during construction to prevent adverse impacts.
i. Gwinnett DWR requested water and sewer be connected to the proposed bridges. Gwinnett DWR has sewer, sewer force main and water lines within the project corridor. Gwinnett DWR will confirm locations in first utility submittal.
j. City of Lawrenceville Natural Gas will relocate for the proposed project, and would prefer to attach to the proposed bridge over CSX railroad. GDOT recommended coordinating with CSX Railroad to confirm relocation/attachments to the bridge.
k. Utilities within limited access are permitted to stay within limited access. New utilities or relocations for construction will be required to be located outside of limited access area. GDOT requested utility easements be provided behind the required right of way to accommodate utility relocations.
l. GDOT District Utilities noted that utility costs appeared to be low. Atkins will update concept report when utility cost estimate is completed.
m. Parcels, notably outparcels in the southwest quadrant of the US 29/SR 8 intersection with SR 316, might be full displacements due to grade changes.
n. GDOT requested Atkins verify line of sight for intersections and driveways to ensure adequate intersection sight distance.
o. Sight distance prior to the temporary traffic signal might be a concern during construction with the CSX Railroad bridge. Advance warning signals might be warranted.
p. GDOT requested ICE and traffic signal warrants to be included in the concept report documentation. ICE will be required for the existing intersections as well as for each new intersection formed by the grade separations.
q. GDOT Design Policy recommended the following:
    i. Provide separate concept reports for each project to help differentiate project understanding, quantities and layouts.
    ii. Update the location sketch to show the begin and end of each project
    iii. Provide name of Office that prepared or approved justification statement
    iv. Consider adding Future Long-Range Projects in the concept report
    v. Verify design vehicle for each route
    vi. Update concept report to current GDOT PDP template

This document represents Atkins' interpretation of the meeting. Please contact the project manager if you have any questions.

Sincerely,
Scott Shelton, P.E.
Atkins

MEETING SIGN-IN SHEET

PI# 0013895, 0013896, & 0013897- Gwinnett County		**Meeting Date:**	January 23, 2018 @ 10 am
Purpose:	Initial Concept Team Meeting	**Place/Room:**	Gwinnett Admin Center 75 Langley Drive Lawrenceville, GA 30046

Name	Company/Title	Phone	E-Mail
Eugene Edmondson	Williams GAS Senior Tech	770-778-4191	r.eugene.edmondson@williams.com
Edgardo Aponte	Gwinnett Co. DOT	770-822-7433	edgardo.aponte@gwinnettcounty.com
David Tucker	Gwinnett Co. DOT	770.822.7407	david.tucker@gwinnettcounty.com
Barry Mock	City of Lawrenceville	770/277-7532	barry.mock@lawrencevillega.org
Jonathan Cox	JACOBS - OES	770-286-0756	Jonathan.Cox@JACOBS.com
Anthony Tate	GDOT - Program Delivery	404-631-1769	atate@dot.ga.gov
Shane Giles	GDOT - D1 Traffic Ops	770 533-8491	Shgiles@dot.ga.gov
Lewis Cooksey	GCDOT/Assistant Director	770-822-7428	lewis.cooksey@gwinnettcounty.com
Jessica Garcia	Gdot-D1 Traffic OPS	770-533-8492	jegarcia@dot.ga.gov
Justin Lott	GDOT - D1 Design	770-533-8271	jlott@dot.ga.gov
Jonathan Dills	GDOT - D1 R/W	770-533-8288	jdills@dot.ga.gov
Tom Sever	Gwinnett DOT/Deputy Dir	770-822-7413	tomisever@gwinnettcounty.com
HAROLD D. MULL	GDOT - OCE	770-533-8963	hmull@dot.ga.gov
John Payne	Keck + Wood / Buford Nat. Gas	678.417.4006	jpayne@keckwood.com
Lynn Palmer	GDOT - D1 Utilities	770-533-8319	jlpalmer@dot.ga.gov
Doris Abernathy	GDOT - D1 Utilities	770-533-8318	dabernathy@dot.ga.gov
JAMES PARR	City of Lawrenceville Gas	678-725-1311	james.parr@lawrencevillegaweb.org
Anna Ingwersen	Jacobs - OES	404.754.0567	anna.ingwersen@jacobs
Brittney Bultinck	GCDOT	7-822-7489	brittney.bultinck@gwinnettcounty.com
Andrew Pearson	GDOT Traffic Ops	404 635 2859	apearson@dot.ga.gov

MEETING SIGN-IN SHEET

PI# 0013895, 0013896, & 0013897- Gwinnett County		**Meeting Date:**	January 23, 2018 @ 10 am
Purpose:	Initial Concept Team Meeting	**Place/Room:**	Gwinnett Admin Center 75 Langley Drive Lawrenceville, GA 30046

Name	Company/Title	Phone	E-Mail
Bill Ruhsam	Michael Baker	678 966 6612	Bill.Ruhsam@mbakerintl.com
CHRIS PARYPINSK	MAAI	770) 263-5945	cparypinski@maai.net
Mike Moseley	Atkins	770 933-0280	michael.moseley@atkinsglobal.com
Scott Shelton	Atkins	678) 643-3772	Scott.Shelton2@atkinsglobal.com
PATRICK TSE	ATKINS	770-933-0280	patrick.tse@atkinsglobal.com
RUSSELL MADDOX	GDOR	678-376-7130	RUSSELL.MADDOX@GWINNETTCOUNTY.COM

Meeting Minutes

Project:	PI Nos. 0013895-0013897 SR 316 east of Cedars Road to west of Sugarloaf Parkway		
Subject:	Concept Team Meeting		
Date and time:	March 14, 2019 - 9:30 am		
Meeting place:	Gwinnett County:2nd Floor Conference Room	**Minutes by:**	SDS
Attendees:	See attached Sign in Sheet		

1. **Project Background**
    a. Overarching goal of the project is to create grade separations on SR 316 at Hurricane Trail and US 29/SR 8 Winder Highway by constructing future C-D (Collector-Distributor) system from Cedars Road to Harbins Road. The C-D system will operate as mainline SR 316 until such time that the system requires full build out. C-D lanes exist between Collins Hill Road and SR 20/Buford Drive.
    b. This project connects to PI Nos 0013893 & 0013894 to the west and ties back to SR 316 approximately 5,000 linear feet east of US 29/SR 8 Winder Highway just prior to the existing interchange on SR 316 at Sugarloaf Parkway. PI No 0013893 (Atkins design) is a potential grade separation at Hi Hope Road and SR 316. PI No 0013894 (Michael Baker design) will modify the intersection on SR 316 at CR 186/Cedars Road by closing the existing median break and converting Cedars Road southbound to right-in, right-out with SR 316 acceleration and deceleration ramps, and full closure of Cedars Road northbound with a new cul-de-sac built south of the CSX railroad crossing.
    c. There is also a future GDOT Long-Range project on SR 316 to add general-purpose lanes in each direction on SR 316 from Collins Hill Road to Harbins Road. PI Nos 0013895-0013897 will be designed to accommodate any future managed and general-purpose lanes on SR 316.
2. **Project Overview/Justification**
    a. The proposed project begins east of Cedars Road and proposes two grade-separated interchanges on SR 316 at the existing at-grade intersections of Hurricane Trail and US 29/SR 8 Winder Highway, and the closure of the at-grade intersection of Fence Road. The proposed project would construct future C-D roadways and utilize them as mainline SR 316 EB and WB until future traffic demands require construction of future thru lanes. The proposed project is State and County Funded. PI Nos 0013893 and 0013894 have separate schedules while PI Nos 0013895, 0013896 and 0013897 have one schedule and will be designed/let as one project.
    b. A Value Engineering study was completed for the project in June 2018. After the VE the concept was modified per the following recommendations:
        i. The westbound SR 316 exit ramp was modified to avoid a bridge crossing over Colonial Pipe Line.
        ii. Construct the outside and inside shoulders with asphalt in lieu of concrete. The design team agreed with modifications for this VE Recommendation and will present this option for consideration during the pavement design process.
        iii. The urban shoulder on Hurricane Trail was reduced from 16 to 12 feet.
        iv. Hurricane Trail was modified from two lanes in each direction with a raised median to one lane in each direction with a flush median.

3. **Review of Concept Report/General Discussion**
    a. GDOT Intermodal requested the following be added to the FAA coordination section:

    Airspace analysis will be required for the project once design is to a point where structure elevations are known. This will include top elevation of the bridge spans, and traffic signal pole heights. In addition, the design will need to include a note that the contractor will need to submit a case for planned equipment heights (i.e. cranes for bridge beam and signal pole installs once their means and methods are determined and the contractor will need to notify the airport prior to commencing field work and provide duration times the cranes will be in use.)

b. It was recommended to add Williams Natural Gas to the Utility Owner list for the project since they have two natural gas lines (16-inch and 24-inch) passing under SR 316 within the project limits.
c. The PE information in the Concept Report Cost Summary table is incorrect per recent changes with funding with the projects. Atkins will update accordingly per coordination with the GDOT PM.
d. The proposed staging for the new interchange on SR 316 at US 29/SR 8 Winder Highway was reviewed by the attendees. It was recommended to construct full depth replacement on SR 316 in lieu of temporary pavement in stage 1 as part of the staging plan to shift US 29/SR 8 Winder Highway to the south.

This document represents Atkins' interpretation of the meeting. Please contact the project manager if you have any questions.

Sincerely,
Scott Shelton, P.E.
Atkins

MEETING SIGN-IN SHEET

PI# 0013895, 0013896, & 0013897 – Gwinnett County		**Meeting Date:**	March 14, 2019 @ 9:30 am
Purpose:	Concept Team Meeting	**Place/Room:**	Gwinnett Justice & Administration Center 75 Langley Drive Lawrenceville, GA 30046

Name	Company/Title	Phone	E-Mail
Mike Moseley	ATKINS	770 933-028	michael.moseley@atkinsglobal.com
Scott Shelton	ATKINS	770 933-0280	scott.shelton2@atkinsglobal.com
PATRICK TSE	ATKINS	770-933-0280	Patrick.tse@atkinsglobal.com
XAVIER RANDOLPH	ATKINS	770-933-0280	XAVIER.RANDOLPH@ATKINSGLOBAL.COM
ANDREW THOMPSON	GCDOT	770-822-7484	andrew.thompson@gwinnettcounty.com
Brittney Bultinck	GCDOT	7-822-7489	brittney.bultinck@gwinnettcounty.com
Anthony Tate	GDOT - OPP	(404)631-1769	atate@dot.ga.gov
Megan Weiss	GDOT - Planning	4046311779	mweiss@dot.ga.gov
Regan Hammond	Jacobs	4)978-7594	regan.hammond@jacobs.com
CHRIS PARYPINSKI	MA	7)263-5945	cparypinski@maal.net
Bill Rubsam	Michael Baker	678 454 1012	Bill.Rubsam@mbakerintl.com
RUSSELL MADDOX	GCDWR	678-376-7130	rimaddox@GWINNETTCOUNTY.com
Edgardo Aponte	Gwinnett DOT	770-822-7433	edgardo_aponte@gwinnettcounty.com
Joseph Robinson	GDOT Aviation	404-631-1788	jorobinson@dot.ga.gov
JASON MOBLEY	GDOT - OPD	706.601.9295	jmobley@dot.ga.gov
MATT SMITH	GWINNETT DOT	7-822-5196	MATTHEW.SMITH@GWINNETTCOUNTY.COM
KRYSTAL STOUALL-DIXON (AT)	GDOT - OPD	(404)631-1572	kstouall-dixon@dot.ga.gov

Attachment 15

VE Implementation Letter

Georgia Department of Transportation

Interoffice Memo

FILE: Gwinnett Co. PI# 0013895, 0013896, 0013897

DATE: September 18, 2018

FROM: Erik Rohde P.E., State Project Review Engineer

TO: Kimberly Nesbitt, State Program Delivery Administrator
Attn: Anthony Tate, GDOT Project Manager

SUBJECT: Implementation of Value Engineering Study Alternatives

The VE Study for the above project was held June 25 - 28, 2018. These revised responses were received on September 17, 2018. Recommendations for final implementation of the Value Engineering Study Alternatives are indicated in the summary table below. The Project Manager shall incorporate the VE alternatives recommended for approval to the extent reasonable in the design of this project. Please note, if the implementation of any VE alternative may require a Design Exception and/or Design Variance, those must be requested separately.

ALT #	Description	Potential Savings/ LCC	Implement	Comments
R-1.0	Maintain existing lanes and construct new grade separated interchanges.	$37,657,013	No	Maintaining traffic on the existing SR 316 lanes will not accommodate the future planned improvements. (See Designer's explanations for further details).
R-1.1	Maintain existing lanes, construct new grade separated interchanges and acquire Right of Way for future Collector Distributor (C-D) lanes and ramps.	$35,758,013	No	Maintaining traffic on the existing SR 316 lanes will not accommodate the future planned improvements. (See Designer's explanations for further details).

R-1.2	Widen existing SR 316 by one lane in each direction and construct new grade separated interchanges.	$20,638,448	No	Same reasons stated for R-1.0 & R-1.1 (see above).
R-2.0	Shorten the end of the project; Tie-in before the Colonial Pipeline easement (WB only).	$5,289,419	Yes	This will be implemented.
R-6.0	Construct only the outside shoulders with bituminous asphalt (HMA) in lieu of concrete at SR 316 ramps and C-D lanes.	Proposed = $1,823,050 Actual = $1,205,964	Yes, with modifications	OMAT & District #1 requested the shoulders to match the mainline, however HMA shoulders is an acceptable alternative if the outside lane is widened to 13-feet and the lane is striped to 12-feet to prevent edge distresses. Therefore, the savings were reduced by the addition of one extra foot of rigid concrete paving for EB and WB.
R-6.1	Construct only the inside shoulders of SR 316 Ramps C-D lanes with bituminous asphalt (HMA) in lieu of rigid concrete pavement.	Proposed = $680,352 Actual = $299,809	Yes, with modifications	OMAT & District #1 requested the shoulders to match the mainline, however HMA shoulders is an acceptable alternative if the inside lane is widened to 13-feet and the lane is striped to 12-feet to prevent edge distresses. Therefore, the savings were reduced by the addition of one extra foot of rigid concrete paving for EB and WB.

R-7.0	Reduce urban shoulder on Hurricane Trail and Winder Highway from 16-feet to 10-feet (reducing grass buffer from 6-feet to 2-feet.	Proposed = $1,204,347 Actual = $903,260	Yes, with modifications	The Design team agrees to partially reduce the shoulder widths from 16-feet to 12-feet to allow for utility relocations.
R-11.0	Reduce median on Winder Highway from 20-feet raised to 14-feet flush median.	$559,204	No	This raised median is recommended to reduce crash frequency and severity, improve traffic flow and provide pedestrian refuge at intersections.
R-12.0	Reduce Hurricane Trail from 4-lane with raised median to 3-lane with flush median.	$1,392,675	Yes	This will be implemented.
B-1.0	Reduce bridge length of Hurricane Trail over SR 316 (Bridge #1).	$327,666	Yes	This will be implemented.
B-5.0	Reduce shoulder widths on SR 316 bridges over Colonial Pipeline (EB Bridge #5 and WB Bridge #6).	$963,768	No	The bridges will serve as proposed C-D lanes however it will function as an interstate in the future project so the Design team has chosen not to implement this idea.
B-6.0	Utilize 2-span bridge and precast bulb tee girders in lieu of single span bridge with plate girders at eastbound	$692,055	No	Colonial Pipeline doesn't allow excavation within 5-feet of the easement, thereby eliminating the area identified to place the bent. They also have height

	Colonial Pipeline bridge.			restrictions for structures over easement and this idea to utilize bulb tee girders would reduce the overall height and prevent construction equipment accessibility to repair and maintain the pipeline. The location of this bent would also impact an environmentally sensitive area.
B-7.0	Reduce shoulder widths on SR 316 bridges over CSX Railway (EB Bridge #2 and WB Bridge #3).	$471,198	No	The bridges will serve as proposed C-D lanes however it will function as an interstate in the future project so the Design team has chosen not to implement this idea.

The Office of Engineering Services concurs with the Project Manager's responses.

Approved: Margaret B. Pirkle **Date:** 10/10/18
Margaret Pirkle, P.E., Chief Engineer

EAR/CAH/MJS
Attachments

Cc:
Margaret Pirkle/Hiral Patel
Albert Shelby/Kimberly Nesbitt
Krystal Stovall-Dixon/Anthony Tate
John Hancock
Steve Gaston/Lyn Clements
Harold Mull/Travis Bennett
Andrew Pearson
Erik Rohde/Chuck Hasty/Matt Sanders

Georgia Department of Transportation

Interoffice Memo

FILE: P.I. 0013895, Gwinnett County
SR 316 FROM CR 1996/HURRICANE TRAIL TO CR 5661/FENCE ROAD

P.I. 0013896, Gwinnett County
SR 316 @ CR 5661/FENCE RD & NEW LOC FROM FENCE RD TO SR 8

P.I. 001389, Gwinnett County
SR 316 @ SR 8/US 29

DATE: September 14, 2018

Kimberly W. Nesbitt

FROM: Kimberly W. Nesbitt, State Program Delivery Administrator

TO: Erik Rohde, State Project Review Engineer
Attn: Matt Sanders, Value Engineering Specialist

SUBJECT: RESPONSE TO VALUE ENGINEERING STUDY ALTERNATIVES

Attached are the responses for the Value Engineering Study. This office concurs with the responses.

If there are any questions, please contact Anthony Tate of this Office at (404) 631-1769.

KESD

KWN:KESD:ATT
Attachments

ATKINS
Member of the SNC-Lavalin Group

1600 RiverEdge Parkway, NW,
Suite 700
Atlanta, GA 30328-4612
770.933.0280
Atkinsglobal.com
SNCLavalin.com

August 30, 2018

Anthony Tate
GDOT Project Manager
Office of Program Delivery
600 West Peachtree Street, 18th Floor
Atlanta, GA 30308

SUBJECT: New Interchanges on SR 316 at Hurricane Trail and SR 8/US 29
PI Nos. 0013895–0013897
Gwinnett County
Value Engineering (VE) responses

Dear Mr. Tate:

Attached are the responses to the VE study completed on June 28, 2018. If you have any questions, please contact Scott Shelton, Project Manager at 678.247.2476, or scott.shelton2@atkinsglobal.com.

Sincerely,

Atkins North America, Inc.

Scott Shelton
Project Manager

Attachments: VE Responses
GDOT CPACES Records 2001-2012
GDOT SR 316 PES July 2004
SR 316 2018 Future No Build Traffic (DHV)
Winder Highway Crash Location Map
VE Email Correspondence

Value Engineering (VE) Responses

PI Nos. 0013895-97

August 30, 2018

VE ALTERNATIVE R.1.0
Maintain Existing SR 316 Lanes and Construct New Grade-Separated Interchanges

Disposition Recommendation: *(Select one)*

☐ **AGREE** ☐ **AGREE, WITH MODIFICATIONS** ☒ **DISAGREE**

Explain, comment, and/or discuss rationale for disposition recommendation:

The Department recognizes the regional significance of SR 316 and has identified ten (10) major grade-separated interchanges along SR 316 from Lawrenceville to Athens scheduled for construction starting in 2017 and continuing through 2026. In addition, GDOT has a programmed project PI No. 0006937 to add one general purpose lane in each direction on SR 316 from Cedars to Drowning Creek Road and the bridges and ramps will be designed to accommodate the future long-range project of adding managed lanes on SR 316. Therefore, we disagree with maintaining traffic on the existing SR 316 lanes and constructing the grade separated interchanges as it will not accommodate the futureplanned improvements on SR 316.

We also disagree with the VE conclusion on utilizing the existing pavement on SR 316. The attached GDOT CPACEs report was pulled along SR 316 from mile markers 9 thru 12 and years 2001 thru 2012. The CPACEs pavement rating between mile markers 9 thru 10 dropped several times below 70 primarily due to longitudinal cracking. Therefore, the CPACEs rating on SR 316 supports the findings from the July 2004 pavement evaluation report, also attached, that SR 316 exhibits extensive cracking throughout the project limits and recommended full depth replacement of SR 316.

In addition to the SR 316 pavement concerns, the shoulders on SR 316 would need to be upgraded. The shoulders on SR 316 meet current AASHTO requirements for an arterial, but do not meet current AASHTO requirements for a limited access/freeway of 12 feet inside (10 feet paved), and 14 feet outside (12 feet paved). Therefore, we don't agree with the VE concrete paving reduction cost of $7,919,957 as full depth replacement with new shoulders would be required on SR 316.

We also don't agree with the reduction in cost of $1,171,170 and $1,215,280 for the eastbound and westbound bridges over CSX. Both bridges would have to be replaced to address AASHTO shoulder requirements, and widening the existing bridges is not feasible as vertical clearance requirements over the CSX railroad would not be met if the existing bridges are widened. The bridges over Colonial Pipeline would also need to be replaced to accommodate the SR 316 shoulder modifications to meet AASHTO requirements, so we do not agree with the cost reductions in the VE.

We also disagree with the VE cost reductions for erosion control, drainage, and signing and marking as these items would be similar to complete full-depth and shoulder replacement of SR 316. Removal of the pavement on SR 316 would also increase the grading complete by $1,189,842 and traffic control costs by $5,000,000, and the right of way cost savings of $1,899,000 is not agreeable either as limited access rights from the six parcels shown as savings in the the VE study will have to be acquired for SR 316 to bring the facility up to freeway requirements.

Additional Grading Complete Calculation				
Area to be Removed	Depth	Volume	Cost/Volume	Estimated Cost
856,686 sq. ft.	1.5 feet	47,594 cu. yds.	$25/cu. yds.	$1,189,841.67

The table below shows a revised negative cost saving of $1,094,972.42 for this VE Alternative, so we disagree and will not implement this VE recommendation as the cost savings is no longer relevant and the VE recommendation does not accommodate future planned improvements on SR 316.

Item	VE Reduction in Cost	Revised Costs
Concrete Paving Reduction	$ 7,919,957.00	
Right of Way	$ 1,899,000.00	
EB Bridge Over CSX	$ 1,171,170.00	
WB Bridge Over CSX	$ 1,215,280.00	
EB Bridge over Colonial Pipeline	$ 2,697,975.00	
WB Bridge over Colonial Pipeline	$ 1,731,975.00	
Earthwork Reduction	$ 2,500,000.00	
Erosion Control Reduction	$ 5,161,860.00	
Drainage Reduction	$ 4,863,320.00	
Retaining Wall Reduction	$ 5,094,869.25	$ 5,094,869.25
Signing and Marking Reduction	$ 2,451,405.00	
Demolition of Bridges	$ 950,202.00	
Additional grading complete to remove pavement on SR 316		$(1,189,841.67)
Additional Traffic Control to remove concrete on SR 316		$(5,000,000.00)
	$ 37,657,013.25	$(1,094,972.42)

VE ALTERNATIVE R-1.1
Creative Idea Description
Maintain Existing SR 316 Lanes and Construct New Grade-Separated Interchanges; Acquire Right-of-Way for Future Collection-Distributor (C-D) Lanes and Ramps

Disposition Recommendation: *(Select one)*

☐ **AGREE** ☐ **AGREE, WITH MODIFICATIONS** ☒ **DISAGREE**

Explain, comment, and/or discuss rationale for disposition recommendation:

Per the comments above on R1.0, we disagree and will not implement this recommendation.

VE ALTERNATIVE R-1.2
Creative Idea Description
Widen Existing SR 316 by One Lane and Construct New Grade-Separated Interchanges

Disposition Recommendation: *(Select one)*

☐ **AGREE** ☐ **AGREE, WITH MODIFICATIONS** ☒ **DISAGREE**

Explain, comment, and/or discuss rationale for disposition recommendation:

Per the comments above on R1.0, we disagree and will not implement the new grade separated interchanges. We also disagree with implementing an additional general-purpose lane to this project since the theoretical maximum saturation flow rate per lane is not exceeded on SR 316 for the 2048 design year traffic. For a two-lane facility, the theoretical maximum saturation flow rate per lane is 3,800 vehicles per hour (vph). However, the highest no build 2048 volume on SR 316 is only 3,505 vph located just east of the Distribution Center.

VE ALTERNATIVE R-2.0
Creative Idea Description
Shorten End of Project; Tie-in Before Colonial Pipeline Easement (Applies to Westbound Only)

Disposition Recommendation: *(Select one)*

☒ **AGREE** ☐ **AGREE, WITH MODIFICATIONS** ☐ **DISAGREE**

Explain, comment, and/or discuss rationale for disposition recommendation:

VE ALTERNATIVE R-6.0
Creative Idea Description
Construct Asphalt Shoulders at Ramps and C-D Lanes

Disposition Recommendation: *(Select one)*

☐ **AGREE** ☒ **AGREE, WITH MODIFICATIONS** ☐ **DISAGREE**

Explain, comment, and/or discuss rationale for disposition recommendation:

GDOT OMR and District 1 requested concrete shoulders to match the mainline. However, HMA shoulders would be a feasible alternative if the outside concrete lane is widened to 13

feet and striped at 12 feet to prevent edge distresses due to the more-flexible HMA shoulder next to the rigid concrete pavement. The addition of one linear foot of concrete adjacent to each shoulder resulted in an additional construction cost of $617,085.62, and reduced the savings of the VE recommendation to $1,205,964.38.

GDOT also completed a pavement evaluation on SR 316 from SR 120 to SR 8/Winder Highway in July 2004. The report recommended to construct the outside lane 14 feet wide with tied shoulders, striped at 12 feet, and to use 1.5-inch dowel bars for load transfer. Lastly, the proposed project has 12% trucks with 55,900 and 67,300 vehicles per day in 2026 and 2046, respectively, so truck traffic and high vehicular volumes make concrete a viable alternative for the shoulders to provide longevity for the corridor and potential truck parking. Therefore, we will propose a concrete and asphalt design for GDOT pavement design approval and will modify the design to asphalt if agreeable based on GDOT pavement design approval.

Location	Length (Linear Feet)	Additional Concrete Pavement (Linear Feet)	Area of Concrete
Ramp M	1,131	2.00	251 s.y.
Ramp J	1,200	2.00	267 s.y.
Ramp K	1,500	2.00	333 s.y.
Ramp L	850	2.00	189 s.y.
Ramp Q	1,200	2.00	267 s.y.
Ramp N	1,300	2.00	289 s.y.
Ramp P	1,875	2.00	417 s.y.
Ramp O	1,900	2.00	422 s.y.
EB CD	11,891	2.00	2642 s.y.
WB CD	13,137	2.00	2919 s.y.
		Total Area	7996 s.y.
	Additional Cost based on $77.17/s.y.		$ 617,085.62

VE ALTERNATIVE R-6.1

Creative Idea Description
Construct Inside Shoulder of Ramps and C-D Lanes as Asphalt

Disposition Recommendation: *(Select one)*

☐ AGREE ☒ AGREE, WITH MODIFICATIONS ☐ DISAGREE

Explain, comment, and/or discuss rationale for disposition recommendation:

GDOT OMR and District 1 requested concrete shoulders to match the mainline per the attached email correspondence. However, HMA shoulders would be a feasible alternative

if the outside concrete lane is widened to 13 feet and striped at 12 feet to prevent edge distresses due to the more flexible HMA shoulder next to the rigid concrete pavement. The addition of one linear foot of concrete adjacent to the inside shoulder resulted in an additional construction cost of $308,542.81 (half of the cost in R6.0), and reduced the savings of the VE recommendation to $299,809.19. GDOT also completed a pavement evaluation on SR 316 from SR 120 to SR 8/Winder Highway in July 2004. The report recommended to construct the outside lane 14 feet wide with tied shoulders, striped at 12 feet and to use 1.5-inch dowel bars for load transfer.

Lastly, the proposed project has 12% trucks with 55,900 and 67,300 vehicles per day in 2026 and 2046, respectively, so truck traffic and high vehicular volumes make concrete a viable alternative for the shoulders to provide longevity for the corridor. Therefore, we will propose a concrete and asphalt design for GDOT pavement design approval and will modify the design to asphalt if agreeable based on GDOT pavement design approval.

VE ALTERNATIVE R-7.0
Creative Idea Description
Reduce Urban Shoulder on Hurricane Trail and Winder Highway from 16 feet to 10 feet (Reduce Grass Buffer from 6 feet to 2 feet)

Disposition Recommendation: *(Select one)*

☐ **AGREE** ☒ **AGREE, WITH MODIFICATIONS** ☐ **DISAGREE**

Explain, comment, and/or discuss rationale for disposition recommendation:

We agree with reducing the shoulder width and will partially implement this recommendation. We propose to reduce the shoulder width from 16 feet to 12 feet so that there is adequate room for utility relocations, so the VE savings was reduced by 75% (12/16) to $903,260.25 based on the costs in the VE report.

VE ALTERNATIVE R-11.0
Creative Idea Description
Reduce Median at Winder Highway from 20 feet Raised to 14 feet Flush

Disposition Recommendation: *(Select one)*

☐ **AGREE** ☐ **AGREE, WITH MODIFICATIONS** ☒ **DISAGREE**

Explain, comment, and/or discuss rationale for disposition recommendation:

We disagree and will not implement. Crashes from 2013-2017 were pulled from GDOT in this area and a crash location map was created and is attached. The crash location map shows multiple collisions on Winder Highway at the driveways for QuikTrip, U-Haul, Stars

and Strikes Center, and Alcovy Road. Therefore, a raised median is recommended toreduce the potential for motor vehicle crashes, decrease delays for motorists and improve roadway capacity. Also, with Quik Trip located along the corridor, there is the potential for pedestrian crossings, and the median would allow pedestrians to focus on one direction of traffic when crossing.

VE ALTERNATIVE R-12.0
Creative Idea Description
Reduce Hurricane Trail from Four-Lane with Median to Three-Lane Flush from Sta 113+00 to Sta 123+00, Including Bridge

Disposition Recommendation: *(Select one)*

☒ **AGREE** ☐ **AGREE, WITH MODIFICATIONS** ☐ **DISAGREE**

Explain, comment, and/or discuss rationale for disposition recommendation:

VE ALTERNATIVE B-1.0
Creative Idea Description
Shorten Bridge Length of Hurricane Trail Bridge over SR 316

Disposition Recommendation: *(Select one)*

☐ **AGREE** ☒ **AGREE, WITH MODIFICATIONS** ☐ **DISAGREE**

Explain, comment, and/or discuss rationale for disposition recommendation:

We agree with modifications. The conceptual bridge design was based on a conservative assumption that MSE walls would be required at this location due to urban constraints. However, after further review, MSE walls are not anticipated at this location so they will be removed and a traditional end roll will be utilized. The bridge length will be evaluated and reduced if practical based on a traditional end roll support.

VE ALTERNATIVE B-5.0
Creative Idea Description
Reduce shoulder widths on the SR 316 Bridges Over Colonial Pipeline Bridges (EB Bridge 5 and WB Bridge 6) to 4 Feet Inside and 8 Feet Outside

Disposition Recommendation: *(Select one)*

☐ **AGREE** ☐ **AGREE, WITH MODIFICATIONS** ☒ **DISAGREE**

Explain, comment, and/or discuss rationale for disposition recommendation:

GDOT Bridge's understanding is that SR 316 is being designed to Freeway standards (limited access - similar to an interstate). GDOT Bridge is currently evaluating how to consistently handle bridge shoulder widths along this functional class that fall between our two typical bridge roadway designations (State Route vs Interstate). For this case, the proposedbridges serve as CD lanes to SR 316 and not the mainline, so the GDOT Bridge Office has no objections with reducing the bridge shoulder widths to 8 feet outside/4 feet inside. However,the proposed project will place SR 316 onto the CD system, so the CDs will be carrying SR 316 and will function as an interstate. Therefore, Atkins disagrees and will not implement.

VE ALTERNATIVE B-6.0

Creative Idea Description
Utilize 2-Span Bridge and Precast Bulb Tee Girders In lieu of Single Span Bridge with Plate Girders at Eastbound Colonial Pipeline Bridge

Disposition Recommendation: *(Select one)*

☐ **AGREE** ☐ **AGREE, WITH MODIFICATIONS** ☒ **DISAGREE**

Explain, comment, and/or discuss rationale for disposition recommendation:

GDOT Bridge prefers PSC beams for typical bridge structures because of long-term maintenance and has no objection to modifying the structure type. However, the design consultant will need to verify that an intermediate bent and foundation can be adequately placed between the pipeline ROW and the culvert under the bridge.

We disagree with implementing this VE alternative for the following reasons. First, the Colonial Pipeline easement is shown at an approximate location and will need to be confirmed with Colonial during preliminary design. Also, Colonial Pipeline doesn't allow excavation within five feet of the easement; thereby, eliminating the area identified in the VE to place the bent.

Second, Colonial Pipeline has vertical height restrictions for structures over easement. The proposed VE alternative to utilize bulb tee girders would reduce the overall vertical height, and prevent construction equipment accessibility to repair and maintain the Colonial pipeline.

Third, construction of the proposed bent from the VE would impact a 1,000 square feet of wetland environmental sensitive area and result in a potential practical alternative report (PAR) through the USACOE. The current impacts do not require a PAR, but the additional area might require a PAR and delay the project schedule by six to nine months.

Therefore, we agree PSC is preferred for typical bridge structures but due to the reasons above, we will not implement this alternative.

VE ALTERNATIVE B-7.0

Creative Idea Description

Reduce Shoulder Widths on SR 316 Bridges over CSX Railway (EB Bridge 2 and WB Bridge 3) to 4 Feet Inside and 8 Feet Outside (From 10 feet Inside and 14 Feet Outside)

Disposition Recommendation: *(Select one)*

☐ **AGREE** ☐ **AGREE, WITH MODIFICATIONS** ☒ **DISAGREE**

Explain, comment, and/or discuss rationale for disposition recommendation:

GDOT Bridge's understanding is that SR 316 is being designed to Freeway standards (limited access - similar to an interstate). GDOT Bridge is currently evaluating how to consistently handle bridge shoulder widths along this functional class that fall between our two typical bridge roadway designations (State Route vs Interstate). For this case, the proposedbridges serve as CD lanes to SR 316 and not the mainline, so the GDOT Bridge Office has no objections with reducing the bridge shoulder widths to 8 feet outside/4 feet inside. However,the proposed project will place SR 316 onto the CD system, so the CDs will be carrying SR316 and will function as an interstate. Therefore, Atkins disagrees and will not implement.

GDOT CPACES Records

2001 – 2012

GDOT CPACES Records

Year	Route Type	Route Number	Begin MP	End County	End MP	Direction	Rating	FAILED REPLACED SLABS	FAILED SPALL PATCHES	Faulting Index	LONG CRACKS LEVEL 1	LONG CRACKS LEVEL 2	PATCHED JOINTS	Joint Seal Loss	Shoulder Joint Seal Need?	REPLACED SLABS	ROUGHNESS
2001	State Route (SR)	0316	9.00	Gwinnett	10.00	Increasing	93		9	5	18	0	0			2	1268
2003	State Route (SR)	0316	9.00	Gwinnett	10.00	Increasing	84		0	2	22	0	0			1	1465
2003	State Route (SR)	0316	9.00	Gwinnett	10.00	Both	90		0	2	3	0	0			3	1473
2004	State Route (SR)	0316	9.00	Gwinnett	10.00	Increasing	57	0	0	2	106	33	0			4	1472
2004	State Route (SR)	0316	9.00	Gwinnett	10.00	Both	88	0	0	3	23	0	0			5	1399
2005	State Route (SR)	0316	9.00	Gwinnett	10.00	Both	62	0	1	1	13	0				10	1863
2005	State Route (SR)	0316	9.00	Gwinnett	10.00	Increasing	63	0	5	4	48	67				0	1593
2006	State Route (SR)	0316	9.00	Gwinnett	10.00	Both	53	0	2	3	56	0				21	1998
2007	State Route (SR)	0316	9.00	Gwinnett	10.00	Both	70	0	0	3	43	0				45	1743
2007	State Route (SR)	0316	9.00	Gwinnett	10.00	Increasing	97	0	1	2	1	0				10	1078
2008	State Route (SR)	0316	9.00	Gwinnett	10.00	Increasing	99	0	0	4	0	0				1	1023
2008	State Route (SR)	0316	9.00	Gwinnett	10.00	Both	66	0	0	3	60	0				42	1711
2009	State Route (SR)	0316	9.00	Gwinnett	10.00	Increasing	99	0	0	4	0	0				1	1023
2009	State Route (SR)	0316	9.00	Gwinnett	10.00	Both	66	0	0	3	60	0				42	1711
2010	State Route (SR)	0316	9.00	Gwinnett	10.00	Increasing	97	0	0	3	0	0				0	1083
2010	State Route (SR)	0316	9.00	Gwinnett	10.00	Both	56	0	0	4	143	3				62	1725
2012	State Route (SR)	0316	9.00	Gwinnett	10.00	Increasing	97	0	0	3	0	0				1	1139
2012	State Route (SR)	0316	9.00	Gwinnett	10.00	Increasing	98	0	0	6	0	0				0	1137
2001	State Route (SR)	0316	10.00	Gwinnett	11.00	Increasing	98		1	6	13	0	0			3	905
2003	State Route (SR)	0316	10.00	Gwinnett	11.00	Both	80		0	1	7	0	0			2	1324
2003	State Route (SR)	0316	10.00	Gwinnett	11.00	Increasing	86		2	4	15	0	0			5	1515
2004	State Route (SR)	0316	10.00	Gwinnett	11.00	Increasing	76	0	3	4	73	0	0			4	1568
2004	State Route (SR)	0316	10.00	Gwinnett	11.00	Both	77	0	0	3	7	0	0			1	1242
2005	State Route (SR)	0316	10.00	Gwinnett	11.00	Both	76	0	0	3	4	0				1	1578
2005	State Route (SR)	0316	10.00	Gwinnett	11.00	Increasing	54	0	0	5	41	33				0	1816
2006	State Route (SR)	0316	10.00	Gwinnett	11.00	Increasing	69	0	0	2	0	0				0	1977
2006	State Route (SR)	0316	10.00	Gwinnett	11.00	Both	56	0	1	4	50	0				50	1858
2007	State Route (SR)	0316	10.00	Gwinnett	11.00	Both	73	0	0	6	6	0				29	1861
2007	State Route (SR)	0316	10.00	Gwinnett	11.00	Increasing	95	0	0	3	1	0				10	1360
2008	State Route (SR)	0316	10.00	Gwinnett	11.00	Increasing	95	0	3	3	0	0				1	1372
2009	State Route (SR)	0316	10.00	Gwinnett	11.00	Increasing	95	0	3	3	0	0				1	1372
2010	State Route (SR)	0316	10.00	Gwinnett	11.00	Increasing	95	0	0	5	0	0				0	1373
2010	State Route (SR)	0316	10.00	Gwinnett	11.00	Both	62	0	0	5	45	0				58	1810
2010	State Route (SR)	0316	10.00	Gwinnett	11.00	Increasing	92	0	0	5	5	0				0	1427
2012	State Route (SR)	0316	10.00	Gwinnett	11.00	Both	59	0	0	2	53	0				34	1876
2012	State Route (SR)	0316	10.00	Gwinnett	11.00	Increasing	92	0	0	7	1	0				2	1446
2001	State Route (SR)	0316	11.00	Gwinnett	12.00	Increasing	100		0	5	0	0	0			0	905
2003	State Route (SR)	0316	11.00	Gwinnett	12.00	Both	99		0	2	0	0	0			0	1041
2003	State Route (SR)	0316	11.00	Gwinnett	12.00	Increasing	100		0	5	0	0	0			0	997
2004	State Route (SR)	0316	11.00	Gwinnett	12.00	Increasing	99	0	0	5	1	0	0			0	1072
2004	State Route (SR)	0316	11.00	Gwinnett	12.00	Both	99	0	0	3	0	0	0			0	1027
2005	State Route (SR)	0316	11.00	Gwinnett	12.00	Both	90	0	0	6	0	0				0	1088
2005	State Route (SR)	0316	11.00	Gwinnett	12.00	Increasing	94	0	0	3	0	0				0	1377
2006	State Route (SR)	0316	11.00	Gwinnett	12.00	Increasing	95	0	0	2	0	0				0	1257

GDOT CPACES Records

2006	State Route (SR)	0316	11.00 Gwinnett	12.00 Both	95	0	0	2	0	0			0	1332
2007	State Route (SR)	0316	11.00 Gwinnett	12.00 Both	98	0	0	4	0	0			0	1313
2007	State Route (SR)	0316	11.00 Gwinnett	12.00 Increasing	97	0	0	1	0	0			0	1205
2008	State Route (SR)	0316	11.00 Gwinnett	12.00 Increasing	98	0	0	5	0	0			2	1086
2009	State Route (SR)	0316	11.00 Gwinnett	12.00 Increasing	98	0	0	5	0	0			2	1086
2009	State Route (SR)	0316	11.00 Gwinnett	12.00 Both	95	0	0	6	1	0			0	1258
2010	State Route (SR)	0316	11.00 Gwinnett	12.00 Increasing	97	0	0	4	0	0			0	1151
2010	State Route (SR)	0316	11.00 Gwinnett	12.00 Both	96	0	0	6	0	0			0	1254
2012	State Route (SR)	0316	11.00 Gwinnett	12.00 Increasing	97	0	0	2	1	0			0	1235
2001	State Route (SR)	0316	12.00 Gwinnett	13.00 Increasing	99		0	6	0	0	0		0	716
2003	State Route (SR)	0316	12.00 Gwinnett	13.00 Increasing	100		0	5	0	0	0		0	975
2003	State Route (SR)	0316	12.00 Gwinnett	13.00 Both	100		0	2	0	0	0		0	977
2004	State Route (SR)	0316	12.00 Gwinnett	13.00 Both	100	0	0	2	0	0	0		0	935
2004	State Route (SR)	0316	12.00 Gwinnett	13.00 Increasing	100	0	0	4	0	0	0		0	978
2005	State Route (SR)	0316	12.00 Gwinnett	13.00 Both	90	0	0	5	0	0			0	1095
2005	State Route (SR)	0316	12.00 Gwinnett	13.00 Increasing	98	0	0	3	0	0			0	1101
2006	State Route (SR)	0316	12.00 Gwinnett	13.00 Increasing	97	0	0	2	0	0			0	1168
2006	State Route (SR)	0316	12.00 Gwinnett	13.00 Both	98	0	0	2	0	0			0	1080
2007	State Route (SR)	0316	12.00 Gwinnett	13.00 Both	98	0	0	3	0	0			0	1131
2007	State Route (SR)	0316	12.00 Gwinnett	13.00 Increasing	98	0	0	2	0	0			0	1125
2008	State Route (SR)	0316	12.00 Gwinnett	13.00 Increasing	98	0	0	5	0	0			0	1091
2009	State Route (SR)	0316	12.00 Gwinnett	13.00 Increasing	98	0	0	5	0	0			0	1091
2010	State Route (SR)	0316	12.00 Gwinnett	13.00 Increasing	97	0	0	5	0	0			0	1153
2011	State Route (SR)	0316	12.00 Gwinnett	13.00 Both	97	0	0	2	0	0			0	1169
2012	State Route (SR)	0316	12.00 Gwinnett	13.00 Increasing	97	0	0	2	0	0			0	1207
2001	State Route (SR)	0316	13.00 Gwinnett	14.00 Increasing	97		0	7	0	0	0		0	948
2003	State Route (SR)	0316	13.00 Gwinnett	14.00 Both	100		0	2	0	0	0		0	932
2003	State Route (SR)	0316	13.00 Gwinnett	14.00 Increasing	99		0	5	0	0	0		0	1000
2004	State Route (SR)	0316	13.00 Gwinnett	14.00 Both	99	0	0	2	0	0	0		0	1067
2004	State Route (SR)	0316	13.00 Gwinnett	14.00 Increasing	99	0	0	5	0	0	0		0	1031
2005	State Route (SR)	0316	13.00 Gwinnett	14.00 Both	88	0	0	6	0	0			0	1254
2005	State Route (SR)	0316	13.00 Gwinnett	14.00 Increasing	95	0	0	3	0	0			0	1374
2006	State Route (SR)	0316	13.00 Gwinnett	14.00 Increasing	96	0	0	1	3	0			0	1145
2006	State Route (SR)	0316	13.00 Gwinnett	14.00 Both	98	0	0	1	0	0			0	1111
2007	State Route (SR)	0316	13.00 Gwinnett	14.00 Both	98	0	0	4	0	0			0	1084
2007	State Route (SR)	0316	13.00 Gwinnett	14.00 Increasing	97	0	0	2	0	0			0	1162
2008	State Route (SR)	0316	13.00 Gwinnett	14.00 Increasing	98	0	0	5	0	0			0	1130
2009	State Route (SR)	0316	13.00 Gwinnett	14.00 Increasing	98	0	0	5	0	0			0	1130
2010	State Route (SR)	0316	13.00 Gwinnett	14.00 Increasing	97	0	0	5	0	0			0	1240
2012	State Route (SR)	0316	13.00 Gwinnett	14.00 Increasing	97	0	0	4	0	0			0	1216

GDOT SR 316 PES

July 2004

061192
3.04 SR 316 HOV

COPY

Department of Transportation
State of Georgia

Interdepartment Correspondence

File SR 316 in Gwinnett County
From SR 120 / Duluth-Lawrenceville Highway
To SR 8 / Winder Highway
Approximately from MP 5.0 ± to MP 10.7 ±

Office Materials and Research
Forest Park, Georgia

Date July 9, 2004

From Georgene M. Geary, P.E., State Materials and Research Engineer

To Bryant Poole, State Maintenance Engineer
Attention: Eric Pitts, P.E., Assistant State Maintenance Engineer

Subject Pavement Evaluation

As requested, a Pavement Evaluation has been completed for SR 316 in Gwinnett County. The section evaluated begins at SR 120 / Duluth-Lawrenceville Highway approximately at MP 5.0 ±, and ends at SR 8 / Winder Highway approximately at MP 10.7±.

Existing Pavement

This portion of SR 316 was originally built as a PCC pavement. This pavement is approximately 9 ¼ inches thick over a 5 ¼ inch layer of lean concrete base or Econocrete, that was placed directly on subgrade.

Pavement Distresses

Today, this pavement section exhibits extensive cracking throughout the project limits. This type of cracking is premature, considering the historical performance of rigid pavements in Georgia. Also this type of distress has not been documented on other in-service PCC pavements in Georgia. A Clemson University Faculty member was consulted to determine the possible cause of this premature cracking.

Alkali-Silica Reaction

For that work, core samples were obtained, and were later tested in the University Laboratory. Alkali-Silica reaction (ASR) was confirmed on those cores by using Ultraviolet (UV) indicator lights, and a solution containing the element Uranium.

ASR is an adverse chemical reaction that occurs when high pH pore fluid from the coarse aggregate reacts with the alkali cations from the cement. This reaction develops over time, and

results in a gradual loss of concrete strength. This is a result of the weakening of the chemical bond between the coarse aggregate and the surrounding matrix of cement paste.

Additional cores were obtained and tested using the Dual Staining Test Method, by the aggregate geologists of OMR. While this test method is relatively new, both field and laboratory tests confirmed the presence of ASR, and correlated with the earlier findings using the more elaborate procedure.

The Geologist Report is attached for reference. The concrete aggregate source used for the original construction is no longer an approved materials' source for manufacturing concrete for the Department.

The Econocrete layer was also tested for the presence of ASR. Test results for this layer are negative. This layer can therefore be retained.

For long term performance, it is recommended that the existing concrete pavement be removed in all lanes and directions, and replaced in kind to overcome the ASR problem.

Future HOV Lane and Reconstruction Project

Project MSL-0003-00(168), is a project for the reconstruction and rehabilitation of SR 316 and to add HOV Lanes. This project extends from SR 403 / I-85 to CR 186 / Cedars Road near MP 9.0. It is scheduled for 2009.

The State Maintenance Engineer advised this Office, on June 11, 2004 of possible plans to extend the limits of Project MSL-0003-00(168). This extension is proposed from Cedars Road to SR 8 / Winder Highway. This extension will cover the entire Maintenance project addressed in this evaluation.

Interim Rehabilitation Recommendation

Surface Preparation
It is recommended to seal all surface cracks of the existing PCC pavement with a rubber sealant or perform slab repair as needed. The concrete surface should then be prepared with an application of a tack coat.

Pavement Reinforcement Fabric
Additionally, this Office concurs with the Maintenance Office recommendation that full width, Type II Pavement Reinforcement Fabric mats, be placed on the existing PCC surface prior to overlay. Those mats should assist in retarding surface moisture from reaching the PCC. It is in the presence of moisture that the ASR reaction accelerates and deteriorates the concrete further.

DEPARTMENT OF TRANSPORTATION

STATE OF GEORGIA

INTERDEPARTMENT CORRESPONDENCE

FILE: TQF-108-1 (12)

OFFICE: Materials and Research
Forest Park, Georgia

DATE: 4/23/04

FROM: Grant Eager, Aggregate Geologist GE

TO: J.T. Rabun, Jerry German, Jason Jackson, Myron Banks, A.J. Jubran, Patrick Werho, Peter Wu, Georgene Geary

SUBJECT: Analysis of Concrete Core from GA Hwy 316, Mile-Markers 5 to 10.5, for the Presence of Alkali-Silica Reactivity

On March 3, 2004 Jason Jackson, Jerry German, Patrick Werho and I obtained seventeen concrete cores from the Georgia Hwy 316 concrete paving project from mile-marker 5 through 10.5, east- and westbound lanes. Two cores were taken from the beginning of the adjacent project (mile-marker +10.5) for reference. The concrete of concern is exhibiting extensive cracking throughout the project. A research professor from Clemson University performed petrographic analyses as well as a staining test on the core using uranyl acetate. The latter test is commonly used to confirm the presence of alkali-silica gel, the product that results from Alkali-Silica Reactivity (ASR). In general, ASR is a phenomenon that occurs when the alkalis in the cement chemically react with certain types of silica minerals. The reaction forms an amorphous, siliceous gel around each piece of aggregate imbibing water from the cementacious matrix and resulting in a weaker cement and in a weak and susceptible zone around each piece of reactive aggregate. The most notable "culprits" (reactive minerals) in Georgia are believed to be chert (or flint; most common in natural sands) and strained quartz (most commonly found in highly sheared or faulted rocks). After coring, it was obvious that the coarse aggregate used in the two adjacent projects differed. After evaluating the coarse aggregate in the core hand specimens, we believed that the material originated from the Grayson quarry. A subsequent geologic inspection of Vulcan at Grayson revealed a rock very similar if not identical to the aggregate's properties exhibited in core. Removal of the aggregate form several cores will aid in conformation. A sample of screenings from the quarry was submitted to run ASTM C1260 (Mortar Bar Test for expansion). Results are pending. It must be noted

that, presently, Vulcan at Grayson is a Temporary Source (035T) and is not approved to sell concrete stone for use in State projects. However, at the time of the Georgia Hwy 316 project, the Grayson quarry was a Standard Source and *was* approved to sell concrete stone for use in Departmental projects. Therefore, the results from ASTM C1260 (a test that was implemented only around 8 years ago) will not affect the source's standing on the QPL.

On April 16, 2004, Jason Jackson and I performed a safer and alternative test to the above mentioned uranyl acetate test. Our test involved staining a fresh surface of the core using saturated solutions of two compounds: sodium cobaltinitrite and rhodamine B. Each stain was applied separately, beginning with the sodium cobaltinitrite and rinsing well with deionized (DI) water after each staining. The sodium cobaltinitrite reacts with any potassium bearing compounds forming a yellow precipitate. Research shows that most reactive products are K+Ca+Si±Na gels. Other research has shown that there are two types of reactive gels that exist around the aggregate grains: one potassium-rich that forms adjacent to the grain and one posstassium-poor (and thus calcium-rich) that forms outside the first. The first compound used in the test, sodium cobaltinitrite, will stain the potassium-rich gel yellow. The subsequent step using rhodamine B stains the potassium-poor gel purple. Most commonly a distinct yellow staining will rim the reactive aggregate. Often, a purple staining will rim the yellow rim. Nonetheless, the presence of both stains is confirmation of ASR. Three of the four project cores exhibited very distinct yellow and, often, purple rims after staining. One core tested from the adjacent project did not exhibit stained rims on the aggregate. In conclusion, these preliminary results indicate that ASR is present in the concrete of Georgia Hwy 316 from mile-marker 5 through 10.5. Further research will include continued staining and thin section analysis of the concrete cores.

Reported By:

W. Grant Bager, Aggregate Geologist

SR 316 Future No Build Traffic

Design Hourly Volumes (DHV)

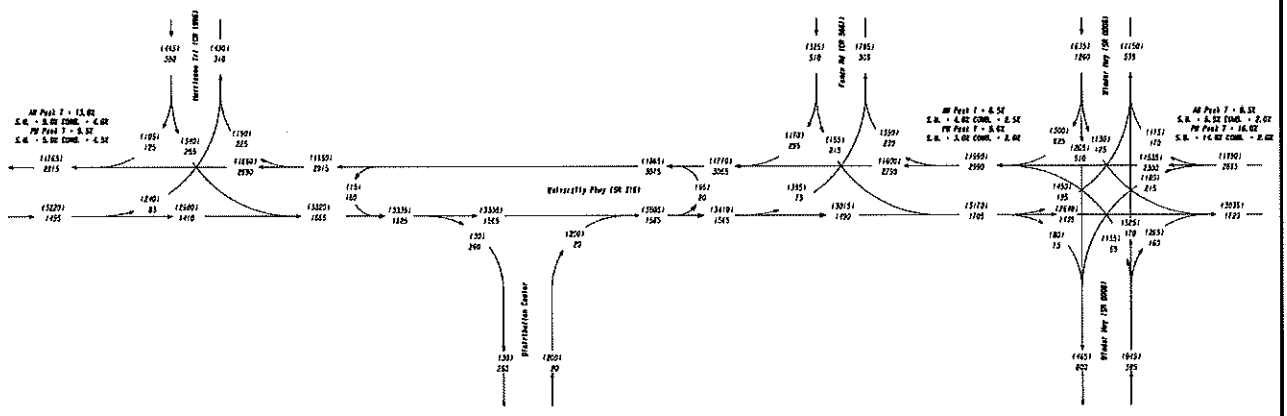

PI# 0013896/0013897
GWINNETT COUNTY
STATE ROUTE 316 (SR 316) INTERIM PLAN
FW HURRICANE TRAIL (CR 1996)
TO WINDER HWY (SR 0008)

FUTURE NO-BUILD TRAFFIC DIAGRAMS
2048 PM DHV - (000)
2048 AM DHV - 000

GDOT
PROGRAM DELIVERY

ATKINS

REVISION DATES

TRAFFIC DIAGRAM
STATE ROUTE 316 (SR 316) INTERIM PLAN
FW HURRICANE TRAIL (CR 1996)
TO WINDER HWY (SR 0008)

DRAWING No.
10-0008

Winder Highway Crash Location Map

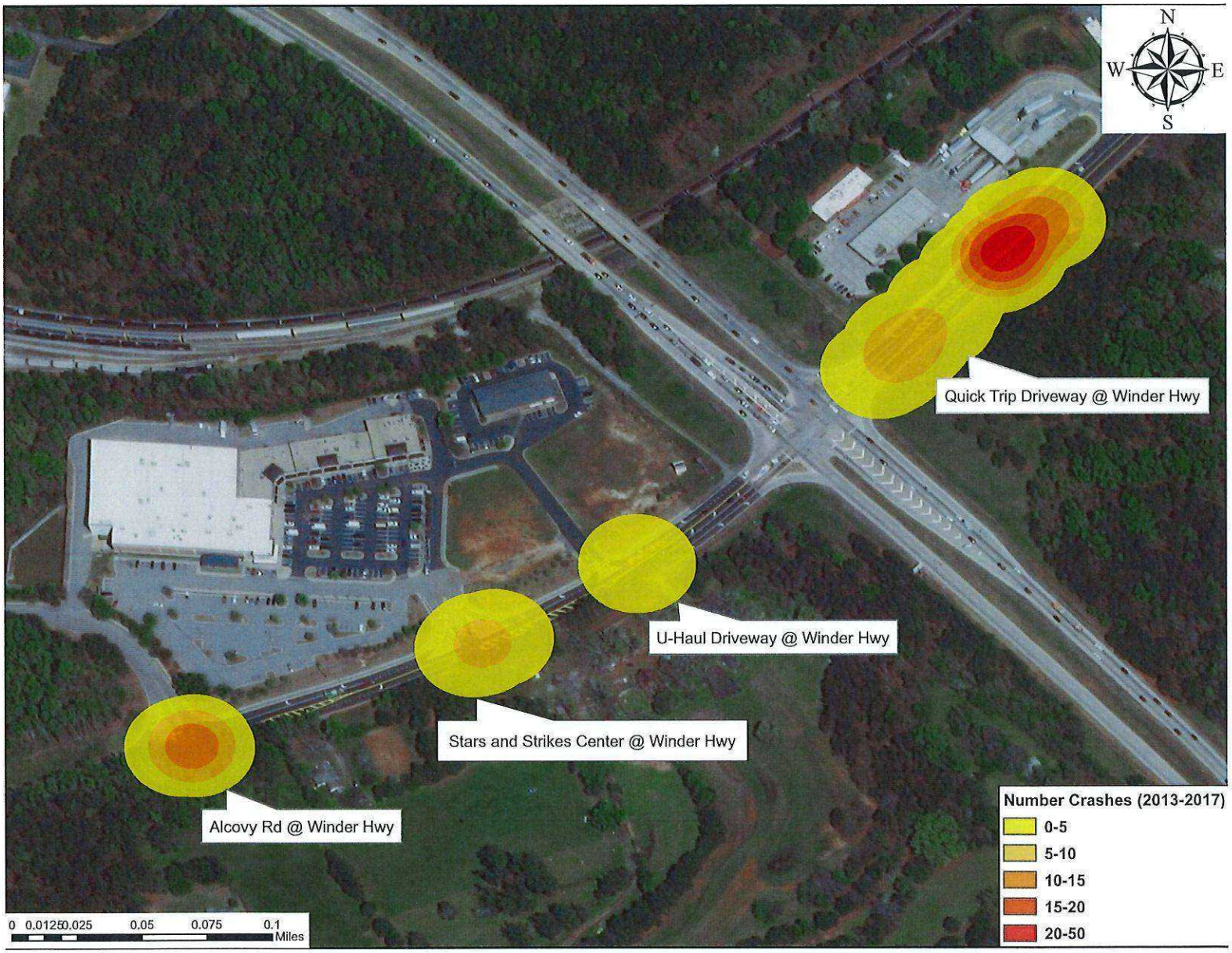
N
W
E
S
Quick Trip Driveway @ Winder Hwy
U-Haul Driveway @ Winder Hwy
Stars and Strikes Center @ Winder Hwy
Alcovy Rd @ Winder Hwy
Number Crashes (2013-2017)
0-5
5-10
10-15
15-20
20-50
0 0.0125 0.025 0.05 0.075 0.1
Miles

VE Email Correspondence

Pl Nos. 0013895-97

Shelton, Scott D

From: Rish, Ian <irish@dot.ga.gov>
Sent: Tuesday, July 31, 2018 7:21 AM
To: Shelton, Scott D
Cc: Tate, Anthony; Moseley, Michael R
Subject: RE: Final VE Report 0013895, 0013896, 0013897

Our preference is concrete shoulders to match the mainline. However if you wanted to propose HMA shoulders we would recommend the outside concrete lane be widened to 13' and striped at 12' to prevent edge distresses due to the more flexible HMA shoulder next to the rigid concrete pavement.

Ian Douglas Rish, P.E.
State Pavement Engineer

Georgia Department of Transportation

Office of Materials and Testing
15 Kennedy Drive
Forest Park, GA, 30297
404.608.4849 office
404.796.4350 cell

From: Shelton, Scott D <Scott.Shelton2@atkinsglobal.com>
Sent: Monday, July 30, 2018 5:27 PM
To: Rish, Ian <irish@dot.ga.gov>
Cc: Tate, Anthony <atate@dot.ga.gov>; Moseley, Michael R <Michael.Moseley@atkinsglobal.com>
Subject: Final VE Report 0013895, 0013896, 0013897

CAUTION: This email originated from outside of the organization. Do not click links or open attachments unless you recognize the sender and know the content is safe.

Ian,

A value engineering (VE) analysis was completed for the proposed grade separations on SR 316 at Hurricane Trail and US 29/SR 8 Winder Highway, PI Nos. 0013895-97. Please find attached the VE report and layout. The VE report recommends changing the shoulder pavement from concrete to asphalt (R6.0 and R6.1) as shown below. However, the pavement evaluation from PI No 0004086 - Grade Separated Interchange at SR 20/SR 316 recommended concrete pavement. Would the Office of Materials and Research be agreeable with the proposed VE recommendation.

R6.0
ORIGINAL DESIGN: The current typical section along SR 316 calls for ramps with a 10'-0" wide outside shoulder and a 4'-0" wide inside shoulder, constructed using concrete. The Collector-Distributor (C-D) lanes along SR 316 are proposed with outside shoulders that are 12'-0" wide and inside shoulders that are 8'-0" wide, also constructed using concrete.
PROPOSED CHANGE: This proposal does not change the width of the shoulders, but it does change the shoulder pavement to asphalt.

R6.1

Shelton, Scott D

From: Mull, Harold <hmull@dot.ga.gov>
Sent: Tuesday, July 31, 2018 3:56 PM
To: Shelton, Scott D
Cc: Tate, Anthony; Moseley, Michael R
Subject: FW: Final VE Report 0013895, 0013896, 0013897
Attachments: Pavement Evaluation 7-9-2004.pdf; 0013895 0013896 0013897.pdf

Good afternoon, Scott,

District 1 prefers concrete shoulders where ever we can get them.

Thank You,

Harold Mull
District Construction Manager-Northeast Region

Georgia Department of Transportation

District One Gainesville
1475 Jesse Jewell Pkwy NE Suite 100
Gainesville, GA 30501
O: 770-533-8963
C: 678-332-8307

From: Shelton, Scott D <Scott.Shelton2@atkinsglobal.com>
Sent: Tuesday, July 31, 2018 10:56 AM
To: Mull, Harold <hmull@dot.ga.gov>
Cc: Tate, Anthony <atate@dot.ga.gov>; Moseley, Michael R <Michael.Moseley@atkinsglobal.com>
Subject: Final VE Report 0013895, 0013896, 0013897

CAUTION: This email originated from outside of the organization. Do not click links or open attachments unless you recognize the sender and know the content is safe.

Harold,

As you know, a value engineering (VE) analysis was completed for the proposed grade separations on SR 316 at Hurricane Trail and US 29/SR 8 Winder Highway, PI Nos. 0013895-97. The VE report recommends changing the shoulder pavement from concrete to asphalt (R6.0 and R6.1 - summarized below). However, the pavement evaluation from PI No 0004086 - Grade Separated Interchange at SR 20/SR 316 recommended concrete pavement, so we coordinated with OMR and they provided the email response below. Does the District have a preference on concrete vs asphalt shoulders based on maintenance or any other concerns?

R6.0
ORIGINAL DESIGN: The current typical section along SR 316 calls for ramps with a 10'-0" wide outside shoulder and a 4'-0" wide inside shoulder, constructed using concrete. The Collector-Distributor (C-D) lanes along SR 316 are proposed with outside shoulders that are 12'-0" wide and inside shoulders that are 8'-0" wide, also constructed using concrete.
PROPOSED CHANGE: This proposal does not change the width of the shoulders, but it

Shelton, Scott D

From: Gaston, Steve <sgaston@dot.ga.gov>
Sent: Wednesday, August 15, 2018 10:04 AM
To: Tate, Anthony
Cc: Clements, Lyn; Shelton, Scott D
Subject: RE: Final VE Report 0013895, 0013896, 0013897

Anthony,

Find our comments below.

B-5.0: Agree
The VE Study proposes to reduce the shoulders from 14' outside/12' inside to 8' outside/ 4' inside on the bridge section to match current policy for a Bridge on the State Route system. Our understanding is that SR 316 is being designed to Freeway standards (limited access - similar to an interstate). We are currently evaluating how to consistently handle bridge shoulder widths along this functional class that fall between our two typical bridge roadway designations (State Route vs Interstate). However in this case, because the proposed bridges will serve as CD lanes to SR 316 and not the mainline, the Bridge Office has no objections reducing to the 8' outside/4' inside shoulders on the bridge section.

B-6.0: Agree
The VE study proposes modifying the structure type from a single span steel beam bridge to a multi-span concrete beam bridge. PSC beams are preferred for typical bridge structures because of long-term maintenance and the Bridge Office has no objection to modifying the structure type. However, the design consultant will need to verify that an intermediate bent and foundation can be adequately placed between the pipeline ROW and the culvert under the bridge.

B-7.0: Agree
The VE Study proposes to reduce the shoulders from 14' outside/12' inside to 8' outside/ 4' inside on the bridge section to match current policy for a Bridge on the State Route system. Our understanding is that SR 316 is being designed to Freeway standards (limited access - similar to an interstate). We are currently evaluating how to consistently handle bridge shoulder widths along this functional class that fall between our two typical bridge roadway designations (State Route vs Interstate). However in this case, because the proposed bridges will serve as CD lanes to SR 316 and not the mainline, the Bridge Office has no objections reducing to the 8' outside/4' inside shoulders on the bridge section.

Steven K. Gaston, P.E.
Assistant State Bridge Engineer

Georgia Department of Transportation

Office of Bridges and Structures
600 West Peachtree Street
24th Floor
Atlanta, GA, 30308
404.631.1881 office
470.755.3447 cell

2/12/2018
USER:rsep5307

GDOT-V81
Atkins_Greyscale.tbl

H:\DWIN\SR 316 at US 29\DGN\0013895_01-0001.dgn
GRNCOV

GDOT

P.I. No.
0013895-896-867

DEPARTMENT OF TRANSPORTATION
STATE OF GEORGIA

PLAN AND PROFILE OF PROPOSED
SR 316 FM CEDAR ROAD TO SUGARLOAF PARKWAY

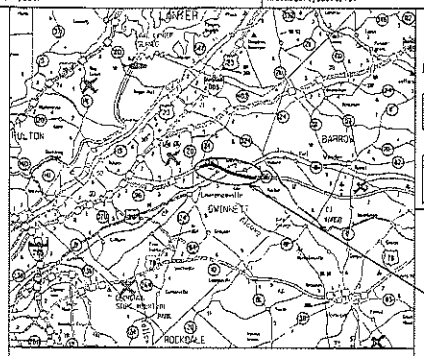

PROJECT LOCATION
GWINNETT COUNTY

LOCATION SKETCH

FEDERAL AID PROJECT

GWINNETT COUNTY

FEDERAL ROUTE # 29

STATE ROUTE # 316.8

P.I.NO. 0013895/0013896/0013897

NOTE:
ALL REFERENCES IN THIS DOCUMENT, WHICH INCLUDES ALL PAPERS, WRITINGS, DOCUMENTS, DRAWINGS, OR PHOTOGRAPHS USED, OR TO BE USED IN CONNECTION WITH THIS DOCUMENT, TO "STATE HIGHWAY DEPARTMENT OF GEORGIA", "STATE HIGHWAY DEPARTMENT", "GEORGIA STATE HIGHWAY DEPARTMENT", "HIGHWAY DEPARTMENT", OR "DEPARTMENT" WHEN THE CONTEXT THEREOF MEANS THE STATE HIGHWAY DEPARTMENT OF GEORGIA, AND SHALL BE DEEMED TO MEAN THE DEPARTMENT OF TRANSPORTATION.

DESIGN DATA:
TRAFFIC A.D.T.: 55900 (2026)
TRAFFIC A.D.T.: 67300 (2046)
TRAFFIC D.H.V.: 4900 (2046)
DIRECTIONAL DIST: 69%
% TRUCKS: 10%
24 HR.TRUCKS %: 12%
SPEED DESIGN: 55/65 MPH

LOCATION & DESIGN APPROVAL DATE:

FUNCTIONAL CLASS:
URBAN PRINCIPAL ARTERIAL

THIS PROJECT IS 100% IN GWINNETT COUNTY AND IS
50 % IN CONG.DIST.NO.7
50 % IN CONG.DIST.NO.10.

PROJECT DESIGNATION: STATE FUNDED

THIS PROJECT HAS BEEN PREPARED USING THE HORIZONTAL GEORGIA COORDINATE SYSTEM OF 1984 (NAD 1983)/94 WEST ZONE, AND THE NORTH AMERICAN VERTICAL DATUM (NAVD) OF 1988.

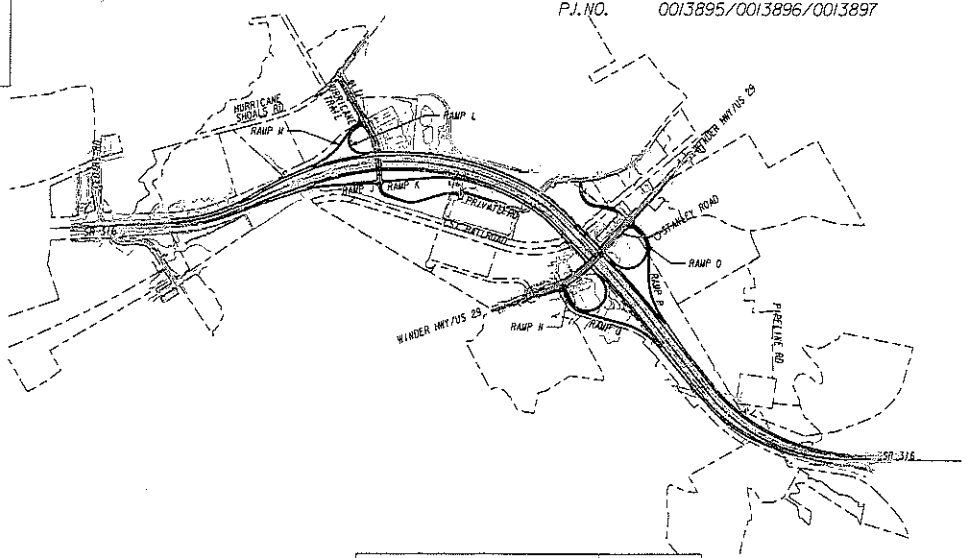

PREPARED BY: _____
DESIGN

RECOMMENDED FOR SUBMISSION BY: _____
DESIGN

SUBMITTED BY: _____
STATE DESIGN ENGINEER

DATE CHIEF ENGINEER

PLANS COMPLETED	
REVISIONS	

SCALE IN FEET
0 1000 2000 4000

THE DATA, TOGETHER WITH ALL OTHER INFORMATION SHOWN ON THESE PLANS OR IN ANYWAY INDICATED THEREBY, WHETHER BY DRAWINGS OR NOTES, OR IN ANY OTHER MANNER, ARE BASED UPON FIELD INVESTIGATIONS AND ARE BELIEVED TO BE INDICATIVE OF ACTUAL CONDITIONS. HOWEVER, THE SAME ARE SHOWN AS INFORMATION ONLY, ARE NOT GUARANTEED, AND DO NOT BIND THE DEPARTMENT OF TRANSPORTATION IN ANY WAY. THE ATTENTION OF BIDDER IS SPECIFICALLY DIRECTED TO SUBSECTIONS 102.04, 102.05, AND 104.03 OF THE SPECIFICATIONS.

LENGTH OF PROJECT	COUNTY No.135 Project No. N/A MILES
NET LENGTH OF ROADWAY NET LENGTH OF BRIDGES NET LENGTH OF PROJECT NET LENGTH OF EXCEPTIONS GROSS LENGTH OF PROJECT	

DRAWING No.
01-0001