ORIGINAL TO GENERAL FILES

D.O.T. 66

DEPARTMENT OF TRANSPORTATION
STATE OF GEORGIA

INTERDEPARTMENT CORRESPONDENCE

FILE P. I. No. 0006327, Barrow County
CSSTP-0006-00(327)
West Winder Bypass

OFFICE Preconstruction

DATE July 20, 2006

FROM Margaret B. Pirkle, P.E., Assistant Director of Preconstruction

TO SEE DISTRIBUTION

SUBJECT APPROVED PROJECT CONCEPT REPORT

Attached for your files is the approval for subject project.

MBP/cj

Attachment

DISTRIBUTION:

Brian Summers
Harvey Keepler
Ken Thompson
Jamie Simpson
Michael Henry
Keith Golden
Joe Palladi (file copy)
Paul Liles
Babs Abubakari
Russell McMurry
BOARD MEMBER

D.O.T. 66

DEPARTMENT OF TRANSPORTATION
STATE OF GEORGIA

INTERDEPARTMENT CORRESPONDENCE

FILE: P. I. No. 0006327, Barrow County
CSSTP-0006-00(327)
West Winder Bypass

OFFICE Preconstruction

DATE July 17, 2006

FROM Margaret B. Pirkle, P.E., Assistant Director of Preconstruction

TO David E. Studstill, Jr., P.E., Chief Engineer

SUBJECT PROJECT CONCEPT REPORT

This project comprises the western bypass of the city of Winder from Patrick Mill Road/CR 93, 1000'± south of SR 316 northward on new and existing location to SR 211 for a total of 5.0 miles. In the 1990's, commercial and industrial land uses began to develop along SR 8, Bankhead Highway and Patrick Mill Road. The west side of the city of Winder includes the West Winder Industrial Park, business centers and manufacturing plants. State Route 8 and Bankhead Highway parallel the CSX Railroad that passes through the city of Winder. Industrial and commercial traffic from this area of Barrow County primarily travels to and from the interstate via SR 316 and SR 211. The existing roadway of SR 8 near the CSX Railroad is operating at a level of service (LOS) "D" under current peak hour conditions and Patrick Mill Road currently operates at LOS "C." The commercial, industrial and residential land use along Patrick Mill Road and SR 8 contribute to the 6,630 VPD and 16,840 VPD, respectively, on these facilities. Patrick Mill Road and SR 8 are currently two lane roadways that are inadequate to handle the projected industrial/commercial traffic of the west side of Winder. The projected level of services are anticipated to decline to LOS "F" at all of the major intersections by the 2029 design year if no action is taken. Under the build condition, the proposed intersection will operate at LOS "D" or better in the design year 2029.

The proposed construction will widen Patrick Mill Road/CR 93 from a two lane to a four lane divided highway with a 24' raised median from Tom Miller Road to approximately 1,000' south of Burson Maddox Road. The roadway will continue north on new location, bridge over SR 8, the CSX Railroad track, and Bankhead Highway, cross Pearl Pentecost Road and connect to SR 211. The project will also include a full diamond interchange at SR 316 and connector roadways from the West Winder Bypass to SR 8 and Bankhead Highway.

The proposed typical section includes two, 12' travel lanes in each direction with a 24' raised median, with 10' shoulders on both sides (6.5' paved with a 2' rumble strip) and 12' right turn (auxiliary) lanes at all major intersections and major commercial drives.

P. I. No. 0006327, Barrow
July 17, 2006

Environmental concerns include requiring a COE 404 Permit; an Environmental Assessment is anticipated; a public hearing open house will be held; 14 displacements---13 residences and 1 other; time saving procedures are not appropriate.

The estimated costs for this project are:

	PROPOSED	APPROVED	FUNDING	PROG DATE
Construction (includes E&C and inflation)	$39,380,000	$28,605,000	L240	LR
Right-of-Way & Utilities*	Local	Local	Local	

*Barrow County signed PMA on 6-28-04 for PE, right-of-way, and utilities.

The project will provide additional capacity for through north/south traffic, connecting to SR 316 on the south and terminating at SR 211 northwest of the city. This project is in the STIP. I recommend this project concept be approved.

MBP:JDQ/cj

Attachment

CONCUR _____
Buddy Gratton, P.E., Director of Preconstruction

APPROVE _____
David E. Studstill, Jr., P.E., Chief Engineer

DEPARTMENT OF TRANSPORTATION
STATE OF GEORGIA

INTERDEPARTMENTAL CORRESPONDENCE

FILE: CSSTP-0006-00(327) Barrow
P.I. No. 0006327
West Winder Bypass

OFFICE: Engineering Services

DATE: July 14, 2006

RECEIVED
JUL 17 2006

FROM: Brian K. Summers, Project Review Engineer REW

TO: Meg Pirkle, Assistant Director of Preconstruction

SUBJECT: **CONCEPT REPORT**

We have reviewed the Concept Report submitted June 23, 2006 by the letter from Brent Story dated June 20, 2006, and have no comments:

The costs for this project are:

Construction	$30,924,875
Inflation	$4,874,533
E & C	$3,579,941
Reimbursable Utilities	$1,750,000
Right of Way	$44,451,650

REW

c: Brent Story, Attn.: Brad McManus

DEPARTMENT OF TRANSPORTATION
STATE OF GEORGIA

Office of Road and Airport Design

PROJECT CONCEPT REPORT

Project Numbers: CSSTP-0006-00 (327)
County: Barrow County
P. I. Number: 0006327

Federal Route Number: N/A
State Route Number: N/A

Regional or Wide area location sketch and Project Description (See Page 2)

Date of Report: May 1, 2006

Recommendation for approval:

DATE 6-20-2006 _____ Project Manager

DATE 6-21-2006 _____ State Road & Airport Design Engineer

The concept as presented herein and submitted for approval is consistent with that which is included in the Regional Transportation Improvement Program (RTP) and the State Transportation Improvement Program (STIP).

DATE _____ State Transportation Planning Administrator

DATE _____ State Financial Management Administrator

DATE _____ State Environmental/Location Engineer

DATE _____ State Traffic Safety & Design Engineer

DATE _____ District Engineer

DATE 7/14/06 _____ Project Review Engineer

DATE _____ State Bridge & Structural Engineer

RECEIVED
JUN 30 2006
BY:

DEPARTMENT OF TRANSPORTATION
STATE OF GEORGIA

Office of Road and Airport Design

RECEIVED
JUL - 5 2006

PROJECT CONCEPT REPORT

Project Numbers: CSSTP-0006-00 (327)
County: Barrow County
P. I. Number: 0006327

Federal Route Number: N/A
State Route Number: N/A

Regional or Wide area location sketch and Project Description (See Page 2)

Date of Report: May 1, 2006

Recommendation for approval:

DATE 6-20-2006 _____ Project Manager

DATE 6-21-2006 _____ State Road & Airport Design Engineer

The concept as presented herein and submitted for approval is consistent with that which is included in the Regional Transportation Improvement Program (RTP) and the State Transportation Improvement Program (STIP).

DATE 6/30/06 _____ State Transportation Planning Administrator

DATE _____ State Financial Management Administrator

DATE _____ State Environmental/Location Engineer

DATE _____ State Traffic Safety & Design Engineer

DATE _____ District Engineer

DATE _____ Project Review Engineer

DATE _____ State Bridge & Structural Engineer

DEPARTMENT OF TRANSPORTATION
STATE OF GEORGIA

Office of Road and Airport Design

PROJECT CONCEPT REPORT

Project Numbers: CSSTP-0006-00 (327)
County: Barrow County
P. I. Number: 0006327

Federal Route Number: N/A
State Route Number: N/A

Regional or Wide area location sketch and Project Description (See Page 2)

Date of Report: May 1, 2006

Recommendation for approval:

DATE 6-20-2006 _____ Project Manager

DATE 6-21-2006 _____ State Road & Airport Design Engineer

The concept as presented herein and submitted for approval is consistent with that which is included in the Regional Transportation Improvement Program (RTP) and the State Transportation Improvement Program (STIP).

DATE _____ State Transportation Planning Administrator

DATE 7-17-06 _____ State Financial Management Administrator

DATE _____ State Environmental/Location Engineer

DATE _____ State Traffic Safety & Design Engineer

DATE _____ District Engineer

DATE _____ Project Review Engineer

DATE _____ State Bridge & Structural Engineer

DEPARTMENT OF TRANSPORTATION
STATE OF GEORGIA

Office of Road and Airport Design

PROJECT CONCEPT REPORT

Project Numbers: CSSTP-0006-00 (327)
County: Barrow County
P. I. Number: 0006327

Federal Route Number: N/A
State Route Number: N/A

Regional or Wide area location sketch and Project Description (See Page 2)

Date of Report: May 1, 2006

Recommendation for approval:

DATE 6-20-2006 _____ Project Manager

DATE 6-21-2006 _____ State Road & Airport Design Engineer

The concept as presented herein and submitted for approval is consistent with that which is included in the Regional Transportation Improvement Program (RTP) and the State Transportation Improvement Program (STIP).

DATE _____ State Transportation Planning Administrator

DATE _____ State Financial Management Administrator

DATE 7.10.06 _____ State Environmental/Location Engineer

DATE _____ State Traffic Safety & Design Engineer

DATE _____ District Engineer

DATE _____ Project Review Engineer

DATE _____ State Bridge & Structural Engineer

SCORING RESULTS AS PER MOG 2440-2

Project Number:	County:	PI No.:
CSSTP-0006-00(327)	Barrow	0006327

Report Date:	Concept By:
June 21, 2006	DOT Office: Road Design
☒ Concept Stage	Consultant: Moreland Altobelli

Project Type: Choose One From Each Column			
	☒ Major	☐ Urban	☐ ATMS
	☐ Minor	☒ Rural	☐ Bridge Replacement
			☐ Building
			☐ Interchange Reconstruction
			☐ Intersection Improvement
			☐ Interstate
			☐ New Location
			☒ Widening & Reconstruction
			☐ Miscellaneous

FOCUS AREAS	SCORE	RESULTS
Presentation	100	
Judgement	100	
Environmental	100	
Right of Way	100	
Utility	100	
Constructability	100	
Schedule	100	

DEPARTMENT OF TRANSPORTATION
STATE OF GEORGIA

Office of Road and Airport Design

PROJECT CONCEPT REPORT

Project Numbers: CSSTP-0006-00 (327)
County: Barrow County
P. I. Number: 0006327

Federal Route Number: N/A
State Route Number: N/A

Regional or Wide area location sketch and Project Description (See Page 2)

Date of Report: May 1, 2006

Recommendation for approval:

DATE 6-20-2006 _____
Project Manager

DATE 6-21-2006 _____
State Road & Airport Design Engineer

The concept as presented herein and submitted for approval is consistent with that which is included in the Regional Transportation Improvement Program (RTP) and the State Transportation Improvement Program (STIP).

DATE _____ _____
State Transportation Planning Administrator

DATE _____ _____
State Financial Management Administrator

DATE _____ _____
State Environmental/Location Engineer

DATE _____ _____
State Traffic Safety & Design Engineer

DATE _____ _____
District Engineer

DATE _____ _____
Project Review Engineer

DATE 6/25/06 _____
State Bridge & Structural Engineer

DEPARTMENT OF TRANSPORTATION
STATE OF GEORGIA

Office of Road and Airport Design

PROJECT CONCEPT REPORT

Project Numbers: CSSTP-0006-00 (327)
County: Barrow County
P. I. Number: 0006327

Federal Route Number: N/A
State Route Number: N/A

Regional or Wide area location sketch and Project Description (See Page 2)

Date of Report: May 1, 2006

Recommendation for approval:

DATE 6-20-2006 _____
Project Manager

DATE 6-21-2006 _____
State Road & Airport Design Engineer

The concept as presented herein and submitted for approval is consistent with that which is included in the Regional Transportation Improvement Program (RTP) and the State Transportation Improvement Program (STIP).

DATE _____ _____
State Transportation Planning Administrator

DATE _____ _____
State Financial Management Administrator

DATE _____ _____
State Environmental/Location Engineer

DATE _____ _____
State Traffic Safety & Design Engineer

DATE _____ _____
District Engineer

DATE _____ _____
Project Review Engineer

DATE _____ _____
State Bridge & Structural Engineer

Project Concept Report page 2
Project Number: CSSTP-0006-00 (327)
P. I. Number: 0006327
County: Barrow County

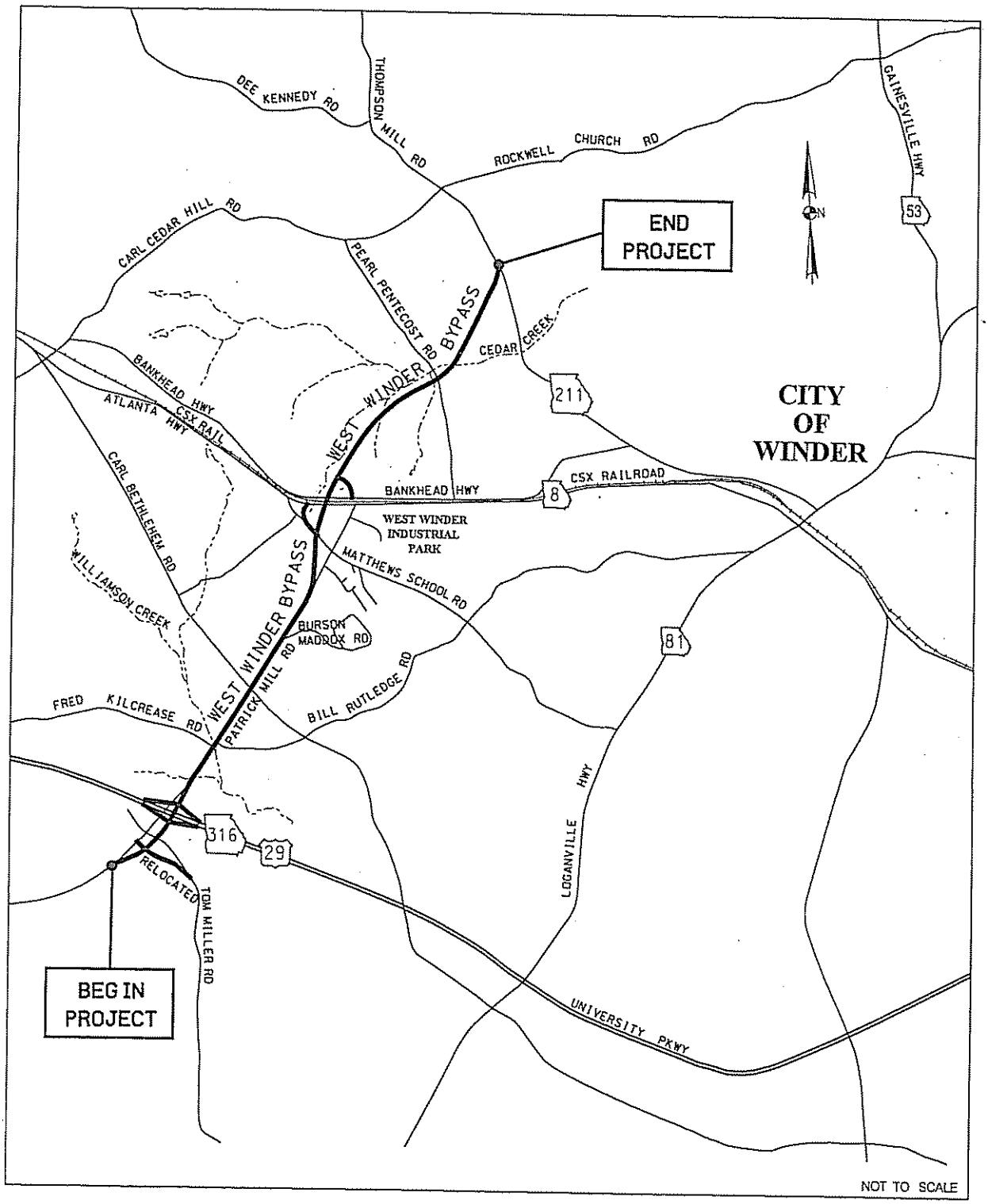

Need and Purpose:
The need for the proposed projects is to provide a bypass route on the west side of the city of Winder from SR 316 to SR 211 and to construct a grade-separated railroad crossing at the intersection of the West Winder Bypass and SR 8. The purpose is to alleviate the percentage of trucks utilizing minor arterial routes and to reduce congestion and accident rates along Patrick Mill Road, SR 8, SR 211 and Pearl Pentecost Road.

Planning Background and Project History
In the 1990's, commercial and industrial land uses began to develop along SR 8, Bankhead Highway and Patrick Mill Road. The west side of the city of Winder includes the West Winder Industrial Park, business centers and manufacturing plants. SR 8 and Bankhead Highway parallel the CSX railroad that passes through the City of Winder. Industrial and commercial traffic from this area of Barrow County primarily travel to and from the interstate system via SR 316 and SR 211. This travel pattern requires that the industrial truck traffic from this area use an at-grade railroad crossing and travel on residential collector roadways to reach SR 211 or travel through the Downtown area of the city of Winder. Currently, the only grade-separated railroad crossing for the city of Winder is the Center Street underpass located approximately 3 miles east of Patrick Mill Road. To address this need, in the year 2000, project CSSTP-0006-00 (326) Phase I, P.I. Number 0006326 was established. This project, slated for construction in 2012, includes a railroad overpass on the west side of Winder from Patrick Mill Road at Mathews School Road to Pearl Pentecost Road. This project was further expanded to Phase II of CSSTP-0006-00 (327), P.I. Number 0006327. Phase II is currently slated for long range construction and includes the Patrick Mill Road widening from SR 316 to the railroad overpass and new roadway construction from Pearl Pentecost Road to SR 211. However, now the two projects are being designed and constructed under project number CSSTP-0006-00 (327), P.I. Number 0006327 as the West Winder Bypass.

The West Winder Bypass project would widen Patrick Mill Road/CR 93 from a two-lane to a four-lane divided highway with a 24-foot raised median from Tom Miller Road to approximately 1,000 feet south of Burson Maddox Road. The roadway would continue north on new location, bridge over SR 8, the CSX railroad track and Bankhead Highway, cross Pearl Pentecost Road and connect to SR 211. The total length of the project would be approximately 5.0 miles. The project would also include a full-diamond interchange at SR 316 and connector roadways from the West Winder Bypass to SR 8 and to Bankhead Highway.

Land Use Trends Impacting Transportation
The current land use surrounding the intersection of the Patrick Mill Road at SR 8 includes primarily industrial, manufacturing and commercial businesses. However, along Patrick Mill Road are several side streets consisting of residential subdivisions, schools and churches. The land use trend of maintaining industrial and commercial businesses in this area with residential land uses being developed on the side streets of Patrick Mill Road between SR 316 and SR 8 is reflected in the Barrow County Future Land Use Map (1999-2018).

Logical Termini
The logical southern terminus of the proposed West Winder Bypass would occur at the intersection of Tom Miller Road relocated approximately 1,000 feet south of SR 316. At this intersection, 42% of the traffic turns left onto Tom Miller Road. Tom Miller Road has two

schools and there are plans to construct a third school. Tom Miller Road intersects with SR 81 near the Walton County line. Consequently, residential commuters and commercial traffic from the north side of SR 316 travel to and from Tom Miller Road.

The logical northern terminus of the proposed project is at the intersection with SR 211. It's at this intersection that West Winder Bypass joins SR 211 traffic from downtown Winder. There is a project listed on the 2030 Regional Transportation Plan that includes the widening of SR 211 from the West Winder Bypass to the I-85 interchange (BA-013), consequently, this intersection was chosen as the logical northern terminus.

Annual Daily Traffic Volumes and Levels of Service

The existing roadway of SR 8 near the CSX railroad crossing is operating at a level of service "D" under current peak hour conditions and Patrick Mill Road currently operates at level of service "C". Level of service (LOS) is a qualitative measurement of traffic flow, which ranges from "A" (unimpeded, free-flowing traffic) through "F" (virtual gridlocked traffic). These roadways currently serve local and commercial traffic in the area. The commercial, industrial and residential land uses along Patrick Mill Road and SR 8 contribute to the 6,630 vehicles per day (vpd) and 16,840 vpd, respectively on these existing facilities. Trucks contribute 34% of the 24-hour traffic volume on SR 8 and 22% of the traffic on Patrick Mill Road.

The average traffic growth rate in this area of Barrow County was determined to be 4.8% per year. However, this growth rate would not be sustained on the state routes, which are the primary routes of diversion. The state routes were increased according to their own average traffic growth rates of 2.5% for SR 211 and 2.6 % for SR 8. As a result of these traffic growth rates, it is projected that traffic will more than double by the year 2029. The West Winder Bypass project is proposed to relieve traffic on these facilities as shown in the table below.

Roadway	Current 2005 AADT (vpd)	LOS	2029 No-Build AADT (vpd)	LOS	2029 Build AADT (vpd)	LOS
Patrick Mill Rd	6,630	C	20,500	F	24,900	C*
SR 8	16,840	D	31,200	F	20,200	D
SR 211	13,860	D	25,000	F	16,200	D
Pearl Pentecost Rd	2,985	B	9,200	C	6,200	B

* Patrick Mill Road would be widened to four lanes in the build condition.

Patrick Mill Road and SR 8 are currently two-lane roadways that are inadequate to handle the projected industrial/commercial traffic of the west side of Winder. Traffic would be diverted from SR 8, SR 211 and Pearl Pentecost Road to the West Winder Bypass, thus allowing these facilities to operate at acceptable levels of service.

Intersection levels of service were determined at each of the major intersections of the project and are shown in the table on the next page. Existing intersection levels of service range from A

to D with the exception of Patrick Mill Road at Tom Miller Road/Fairlong Way, which operates at LOS F during the A.M. peak hour. This intersection may need to be signalized due to the number of left turns from Patrick Mill Road to Tom Miller Road. The projected levels of service are anticipated to decline to LOS F at all of the major intersections by the 2029 design year if no action is taken. Under the build condition, the proposed major intersections would operate at LOS D or better in the design year (2029).

Summary of HCS Analysis Results

Intersections	Existing Year 2005		No-Build Year 2029		Proposed Design - Year 2029	
	AM	PM	AM	PM	AM	PM
Patrick Mill Rd @ Tom Miller Rd/Fairlong Way	F*	D*	F	F	D	C
Patrick Mill Rd @ SR 316	C	C	F	F	--	--
West Winder Bypass @ SR 316 EB Off-Ramp	--	--	--	--	C	C
West Winder Bypass @ SR 316 WB Off-Ramp	--	--	--	--	C	B
Patrick Mill Rd @ Fred Kilcrease Rd	B*	B*	F	F	C	D
Patrick Mill Rd @ Bill Rutledge Rd	C*	B*	F	F	---	---
Patrick Mill Rd @ Carl Bethlehem Rd	B*	B*	F	F	C	C
Patrick Mill Rd @ Burson Maddox Rd	B*	B*	F	F	D*	E*
Patrick Mill Rd @ Plantation Rd	B*	B*	F	F	---	---
Patrick Mill Rd @ Mathews School Rd	B*	B*	F	F	---	---
Patrick Mill Rd @ West Winder Industrial Pkwy	B*	C*	F	F	---	---
West Winder Bypass @ Mathews School Rd	---	---	---	---	C	C
Patrick Mill Rd @ SR 8	B*	D*	F	F		
Mathews School Rd @ SR 8	---	---	---	---	B	B
Bankhead Hwy @ Pearl Pentecost Rd	B*	B*	F	F	---	---
Connector Road @ Bankhead Hwy	---	---	---	---	B	B
West Winder Bypass @ Connector Road	---	---	---	---	B	B
West Winder Bypass @ Pearl Pentecost Rd	---	---	---	---	C	C
West Winder Bypass @ SR 211	---	---	---	---	B	B

* For unsignalized intersections, LOS is given for minor street approach.

Safety Improvements

An inventory of crash data from 2001 to 2003 is provided in the table on the next page. The table lists the total number of accidents and injuries coded to roadway segments of Patrick Mill Road, SR 8 and SR 211 that are improved by the West Winder Bypass project. Two fatalities were recorded during 2001 and 2003 along a short section of SR 8 at or near Patrick Mill Road. Additionally, there was one fatality at the intersection of Patrick Mill Road at SR 316 in 2001.

Crash Data
Comparison to Statewide Rates for Major Collectors

Roadway Segment	Year	No. Of Accidents	Accident Rate *(Statewide)*	No. Of Injuries	Injury Rate *(Statewide)*	No. Of Fatalities	Fatality Rate *(Statewide)*
SR 8 (1.71 mi)	**2001**	20	289 *(185)*	15	217 *(98)*	1	14.5 *(2.28)*
	2002	30	332 *(195)*	6	66 *(104)*	0	00.0 *(2.37)*
	2003	42	400 *(211)*	15	143 *(110)*	1	9.5 *(2.95)*
SR 211 (3.46 mi)	**2001**	97	488 *(185)*	32	161 *(98)*	0	00.0 *(2.28)*
	2002	88	541 *(195)*	29	178 *(104)*	0	00.0 *(2.37)*
	2003	79	451 *(211)*	29	166 *(110)*	0	00.0 *(2.95)*
Patrick Mill Rd (2.22 mi)	**2001**	28	606 *(185)*	13	281 *(98)*	1	21.6 *(2.28)*
	2002	39	802 *(195)*	11	226 *(104)*	0	00.0 *(2.37)*
	2003	47	921 *(211)*	24	470 *(110)*	0	00.0 *(2.95)*

The results indicate that Patrick Mill Road, SR 8 and SR 211, all currently have accident, injury and fatality rates above the average rates as compared to similar major collectors statewide. There were seven angle collisions and three rear-end accidents at the intersection of SR 8 and the at-grade railroad crossover. One of these accidents resulted in a fatality. Proposed construction of the West Winder Bypass would result in a decrease in traffic using the SR 8 at-grade railroad crossover and decrease traffic on SR 211. Consequently, the West Winder Bypass project would reduce the risk of various common accidents, specifically rear-end and angle collisions at intersections and at the railroad crossing.

In summary, the proposed construction of the West Winder Bypass would correct the existing roadway deficiencies, improve traffic safety and increase the capacity of the roadway to facilitate the projected traffic growth.

Other Projects in the Area

- GDOT Project 0001038 – SR 124 @ SR 211
- GDOT Project 0001816 – 6th Street/CR 326 Grade Separation @ CSX RR
- GDOT Project 0002248 – Winder Downtown Streetscape Project
- GDOT Project 0006449 – Upgrade Traffic Signals @ Various locations in Barrow County
- GDOT Project 0007356 – CR 714/North Williams Street @ CSX #640124J
- GDOT Project 0007356 – SR 8@ SR 324 & @ CR 326 & @ CR 327 & @ CR 328

- GDOT Project 110620 – I-85 from north of SR 211 to north of SR 60 in Jackson County
- GDOT Project 121730 – SR 988/Winder East bypass from SR 316 to SR 53
- GDOT Project 122870 – SR 316 in Barrow and Oconee Counties – 26 interchanges
- GDOT Project 132970 – SR 11/Winder-Monroe Hwy @ Marburg Creek south of Winder
- GDOT Project 132971 – SR 11/Winder-Monroe Hwy @ Scott Creek 1.7 miles south of Bethlehem
- GDOT Project 171290 – CR 67/Etheridge Road @ CSX Railroad #640141A
- GDOT Project M003152 – SR 211 from SR 316/US 29 to SR 11/Statham Road
- GDOT Project s007743 – Three streets in the City of Winder

Description of the proposed project:
The proposed project would widen Patrick Mill Road/CR 93 from a two-lane to a four-lane divided highway with a 24-foot raised median from Tom Miller Road to approximately 1,000 feet south of Burson Maddox Road. The roadway would continue north on new location, bridge over SR 8, the CSX railroad track and Bankhead Highway, cross Pearl Pentecost Road and connect to SR 211. The total length of the project would be approximately 5.0 miles. The project would also include a full-diamond interchange at SR 316 and connector roadways from the West Winder Bypass to SR 8 and to Bankhead Highway.

The West Winder Bypass is not a designated bicycle or pedestrian route. Therefore, the project would not include bicycle paths or sidewalks but instead would have rural paved shoulders.

Is the project located in a Non-attainment area? __X__ **Yes** _____ **No.**

PDP Classification: Major __X__ Minor _____

Federal Oversight: Full Oversight ( ), Exempt(X), State Funded( ), or Other ( )

Functional Classification: Rural Major Arterial (Existing Rural Major Collector)

U. S. Route Number(s): N/A **State Route Number(s):** N/A

Traffic (AADT):
Base Year: (2009) 18,100 Design Year: (2029) 26,700

Existing design features:
- Typical Section: The roadway segments of Patrick Mill Road and SR 211 that make up sections of the West Winder Bypass are currently 2-lane roadways with 11 to 12-foot lanes in each direction and rural open-ditch shoulders.
- Posted speed:
  - Patrick Mill Road south of Carl Bethlehem Road – 50 mph
  - Patrick Mill Road north of Carl Bethlehem Road – 35 mph
  - SR 8 55 mph
  - Bankhead Highway 35 mph
  - Carl Bethlehem Road 45 mph

- Bill Rutledge Road 35 mph
- Fred Kilcrease Road 35 mph
- Mathews School Road 35 mph
- Bankhead Connector Road 35 mph
- SR 316 65 mph
- Burson Maddox Road 30 mph
- Pearl Pentecost Road 45 mph
- Tom Miller Road 50 mph
- SR 211 55 mph

- Minimum radius for curve: 1600'
- Maximum super-elevation rate for curve: 4.00%
- Maximum grade: 5.7 %
- Width of right of way: Patrick Mill Road - 80 ft.
  SR 211 – 50 ft.
- Major structures:
  - Culvert at Williamson Creek
  - Culvert at Tributary of Williamson Creek
- Major interchanges or intersections along the project: Patrick Mill Road at Tom Miller Road, SR 316, Fred Kilcrease Road, Bill Rutledge Rd, Carl Bethlehem Road, Matthews School Road and SR 8.
- Existing length of roadway segment 1.90 miles of existing roadway
- Beginning mile log for Patrick Mill Road
  - Barrow County mile post: 0.81
- Ending mile log for Patrick Mill Road
  - Barrow County mile post: 2.71
- Mile log for SR 211
  - Barrow County mile post: 16.16

Proposed Design Features:

- Proposed typical section: The typical section includes two 12-foot travel lanes in each direction, with a 24-foot raised median; with 10-foot shoulders on both sides (6-1/2-foot paved with a 2' rumble strip adjacent to the edge of travel lane) and 12-foot right turn (auxiliary) lanes at all major intersections and major commercial drives.

- Proposed Design Speed
  - West Winder Bypass 45 mph
  - SR 8 55 mph
  - Bankhead Highway 35 mph
  - Carl Bethlehem Road 45 mph
  - Bill Rutledge Road 35 mph
  - Fred Kilcrease Road 35 mph
  - Mathews School Road 30 mph
  - Connector Road 35 mph
  - SR 316 65 mph
  - Burson Maddox Road 30 mph
  - Pearl Pentecost Road 40 mph

- Tom Miller Road 50 mph
- SR 211 55 mph

- Proposed Maximum grade Mainline 3.1 % Maximum grade 6%
- Proposed Maximum grade Side Streets 3.3 % Maximum grade 10%
- Proposed Maximum grade driveway 10 %
- Proposed Minimum radius for curve for West Winder Bypass 955'
  Minimum radius 730'
- Proposed Minimum radius for curve for side streets:
  - 300' (30 mph) Matthews School Road Minimum radius 300'
  - 400' (30 mph) Burson Maddox Road Minimum radius 300'
  - 718' (35 mph) Connector Road Minimum radius 420'
  - 500' (35 mph) Bill Rutledge Road Minimum radius 420'
  - 500' (35 mph) Fred Kilcrease Raod Minimum radius 420'
  - 637' (40 mph) Pearl Pentecost Road Minimum radius 565'
  - 730' (45 mph) (side) SR 211 Minimum radius 730'
  - 955' (50 mph) Tom Miller Road Minimum radius 930'

  Side streets not listed have no horizontal curves.
- Proposed Maximum superelevation rate for curve 4.00%
- Right of way
  - Width 140 ft. (typical)
  - Easements: Temporary (X), Permanent (X), Utility ( ), Other ( ).
  - Type of access control: Full ( ), Partial ( ), By Permit (X), Other ( ).
  - Number of parcels: 96 Number of displacements:
    - Business: 0
    - Residences: 13
    - Mobile homes: 0
    - Other: 1
- Structures:
  - Bridge over the CSX railroad
  - Culverts: There is one new culvert at Cedar Creek, one new culvert at Williamson Creek and two extensions to existing culverts at Williamson Creek and a tributary of Williamson Creek.
- Major intersections and interchanges: Patrick Mill Road at Tom Miller Road, SR 316, Fred Kilcrease Road/Bill Rutledge Road, Carl Bethlehem Road, Matthews School Road, Pearl Pentecost Road and SR 211. The existing traffic signal at Patrick Mill Road at SR 316 will be removed and two new traffic signals are proposed at the intersections of the West Winder Bypass and the SR 316 ramps. The existing four-way stop controlled intersection of Patrick Mill Road at Matthews School Road will be replaced by the intersection of the West Winder Bypass and Matthews School Road and the new intersection is proposed to be signalized. The existing four-way stop controlled intersection of Patrick Mill Road and Carl Bethlehem Road is proposed to be signalized. The roadways of Fred Kilcrease Road and Bill Rutledge Road will be realigned to form a 4-legged intersection across West Winder Bypass and the new intersection is proposed to be signalized.

- Traffic control during construction: Traffic control will consist of staged construction and will allow for Patrick Mill Road and SR 211 to remain open during construction.
- Design Exceptions for controlling criteria anticipated:

	UNDETERMINED	YES	NO
HORIZONTAL ALIGNMENT:	( )	( )	(X)
ROADWAY WIDTH:	( )	( )	(X)
SHOULDER WIDTH:	( )	( )	(X)
VERTICAL GRADES:	( )	( )	(X)
CROSS SLOPES:	( )	( )	(X)
STOPPING SIGHT DISTANCE:	( )	( )	(X)
SUPERELEVATION RATES:	( )	( )	(X)
HORIZONTAL CLEARANCE:	( )	( )	(X)
SPEED DESIGN:	( )	( )	(X)
VERTICAL CLEARANCE:	( )	( )	(X)
BRIDGE WIDTH:	( )	( )	(X)
BRIDGE STRUCTURAL CAPACITY:	( )	( )	(X)

- Design Variances: None anticipated.
- Environmental concerns:
  - A preliminary environmental inventory was conducted which included field surveys and review of applicable federal and state databases. It is anticipated that a Section 404 Nationwide permit will be required for the new culvert at Cedar Creek and the extension of the culverts at Williamson Creek. Attached to this report is a map that illustrates the streams and wetlands within the project study area.
  - There is one known UST/hazardous waste site from which right-of-way would be required.
  - There are several potentially eligible historic resources along Patrick Mill Road that will be further studied to avoid impact.
  - There are no environmental justice issues resulting from the displacement residential homes on this project.
- Level of environmental analysis:
  - Are Time Savings Procedures appropriate? Yes ( ) No (X)
  - Categorical exclusion ( )
  - Environmental Assessment/Finding of No Significant Impact (FONSI) (X), or
  - Environmental Impact Statement (EIS) ( ).
- Utility involvements: The following is a list of utilities, and railroad companies and contact person with facilities within the project area:

UTILITY	CONTACT	TELEPHONE
City of Winder Water Department	Wesley Skinner, Superintendent	770-867-7978
City of Winder Gas Department	Wesley Skinner, Superintendent	770-867-7978
BellSouth Telecommunications	Curtis Carey	706-353-4300
Alltel Communications	Angelyn Shumate	770-267-6800
Adelphia/Comcast Cable	Larry Jordan	770-307-4991
Georgia Power Company	Harold Cox	404-506-1406
Jackson EMC	Mike Withrow	706-367-6468
Barrow County Water Department	Myron Garrett	770-307-3014
Colonial Pipeline	Mickey Elliott	770-819-3557

RAILROAD	CONTACT	TELEPHONE
CSX Transportation	Lacoya Greggley	904-245-1234

The complete list of the utility and railroad companies, which includes addresses and additional telephone numbers, is attached to this report.

Project responsibilities:

- Design: Barrow County
- Right-of-Way Acquisition: Barrow County
- Relocation of Utilities: Barrow County
- Letting to contract: Georgia DOT
- Supervision of construction: Georgia DOT
- Providing material pits: Contractor (if required)
- Providing detours: Contractor (if required)

Coordination

- Initial Concept Team Meeting: See attached minutes of meeting held on March 30, 2005.
- Concept Team Meeting: See attached minutes of meeting held on September 27, 2005. Following this meeting, it was decided to include the construction of the interchange at SR 316 as part of the West Winder Bypass project.
- P. A. R.: A Practical Alternatives Report (P.A.R.) is not expected for this project.
- FEMA, USCG, and/or TVA. - None
- Public involvement: PIM and Public Hearing to be held.
- VE Study Required
- Local government comments. See attached minutes of project coordination meeting held on March 30, 2005.
- Other projects in the area:
  GDOT Project 0001038 – SR 124 @ SR 211
  GDOT Project 0001816 – 6th Street/CR 326 Grade Separation @ CSX RR
  GDOT Project 0002248 – Winder Downtown Streetscape Project
  GDOT Project 0006449 – Upgrade Traffic Signals in Barrow County
  GDOT Project 0007356 – CR 714/North Williams Street @ CSX #640124J
  GDOT Project 0007356 – SR 8@ SR 324 & @ CR 326 & @ CR 327 & @ CR 328
  GDOT Project 110620 – I-85 from north of SR 211 to north of SR 60 in Jackson County
  GDOT Project 121730 – SR 988/Winder East bypass from SR 316 to SR 53
  GDOT Project 122870 – SR 316 in Barrow and Oconee Counties – 26 interchanges
  GDOT Project 132970 – SR 11/Winder-Monroe Hwy @ Marburg Creek south of Winder
  GDOT Project 132971 – SR 11/Winder-Monroe Hwy @ Scott Creek 1.7 miles south of Bethlehem
  GDOT Project 171290 – CR 67/Etheridge Road @ CSX Railroad #640141A
  GDOT Project M003152 – SR 211 from SR 316/US 29 to SR 11/Statham Road
  GDOT Project S007743 – Three streets in the City of Winder
- Other coordination to date: None
- Railroads: CSX Railroad - West Winder Bypass will be bridged over the railroad track of CSX Railroad

Scheduling – Responsible Parties' Estimate

- Time to complete the environmental process: 15 Months.
- Time to complete preliminary construction plans: 12 Months.
- Time to complete right-of-way plans: 4 Months.
- Time to complete final construction plans: 6 Months.
- Time to complete to purchase right-of-way: 24 Months.
- Time to complete coordination process relating to the railroad overpass and crossings in the area: 12 Months.

Other alternates considered:

No-Build Alternative

The no-build alternative is an alternative in which Barrow County would take no action to construct the project. Traffic congestion and operational problems would result because the existing two-lane roadways of the area would be inadequate to handle the future (year 2029) traffic volumes.

Original Concept

The original concept for the West Winder Bypass project would widen Patrick Mill Road/CR 93 from a two-lane to a four-lane divided highway with a 20-foot raised median from Tom Miller Road to Matthews School Road. The roadway would bridge over SR 8, the CSX railroad track and Bankhead Highway and tie into Pearl Pentecost Road. Pearl Pentecost Road would be widened from a two-lane to a four-lane divided highway north to Carl Cedar Hill Road. The roadway would continue north on new location and tie into SR 211 near Dee Kennedy Road. This concept would also include ramps from the West Winder Bypass to SR 8 and to Bankhead Highway.

The reasons for not recommending this alignment are as follows:

- Several existing industrial/commercial businesses would lose access to the roadway and would have to be displaced.
- Potentially eligible historic churches and homes would be impacted by the alignment including displacement, which would require a Section 4F evaluation.
- The access ramps to West Winder Bypass from Bankhead Highway and SR 8 may require (horizontal and vertical) design exceptions due to the limitations of right-of-way available.

Comments: None.

Attachments:

1. Cost Estimates:
    a. Construction including E&C
    b. Right of Way
    c. Utilities
2. Typical sections
3. Roadway Profile
4. Traffic Flow Diagrams and Capacity analysis
5. Minutes of Initial Concept Team meeting
6. Minutes of Concept Team meeting
7. LGPA
8. Listing of Utilities and Railroad Companies
9. Map of Streams and Wetlands of Project Study Area

Cost Estimate Report for West Winder Bypass
CSSTP-0006-00 (327), P.I. 0006327

Section Major Structures

Item Number	Quantity	Units	Unit Price	Item Description	Cost
500-3101	400	CY	461.60	CLASS A CONCRETE - CULVERT @ CEDAR CREEK	$184,640.00
500-3101	300	CY	461.60	CLASS A CONCRETE - CULVERT @ WILLIAMSON CREEK	$138,480.00
500-3101	300	CY	461.60	CLASS A CONCRETE - CULVERT	$138,480.00
511-1000	52920	LB	0.71	BAR REINF STEEL – CULVERT @ CEDAR CREEK	$37,573.20
511-1000	39690	LB	0.71	BAR REINF STEEL – CULVERT @ WILLIAMSON CREEK	$28,179.90
511-1000	39690	LB	0.71	BAR REINF STEEL – CULVERT	$28,179.90
511-3001	45258	SF	65.00	CONC BRIDGE (CONCEPT)	$2,941,770.00
511-3001	28783	SF	65.00	CONC BRIDGE –OVER SR 316 (CONCEPT)	$1,870,895.00
627-1000	9000	SF	35.79	MSE WALL FACE, 0 - 10 FT HT, WALL NO -	$322,110.00
627-1010	18000	SF	34.09	MSE WALL FACE, 10 - 20 FT HT, WALL NO -	$613,620.00
627-1020	9000	SF	29.80	MSE WALL FACE, 20 - 30 FT HT, WALL NO -	$268,200.00
				Section Sub Total:	**$6,572,128.00**

Section Grading and Drainage

Item Number	Quantity	Units	Unit Price	Item Description	Cost
207-0203	1300	CY	34.52	FOUND BKFILL MATL, TP II	$44,876.00
210-0100	1	LS	10500000.00	GRADING COMPLETE -	$10,500,000.00
441-0204	500	SY	26.29	PLAIN CONC DITCH PAVING, 4 IN	$13,145.00
441-0600	30	CY	581.79	CONC HEADWALLS	$17,453.70
550-1180	1000	LF	28.01	STORM DRAIN PIPE, 18 IN, H 1-10	$28,010.00
550-1300	1500	LF	42.73	STORM DRAIN PIPE, 30 IN, H 1-10	$64,095.00
550-1301	1000	LF	44.67	STORM DRAIN PIPE, 30 IN, H 10-15	$44,670.00
550-1302	500	LF	35.73	STORM DRAIN PIPE, 30 IN, H 15-20	$17,865.00
550-1303	300	LF	81.00	STORM DRAIN PIPE, 30 IN, H 20-25	$24,300.00
550-1360	1500	LF	50.81	STORM DRAIN PIPE, 36 IN, H 1-10	$76,215.00
550-1361	1200	LF	53.41	STORM DRAIN PIPE, 36 IN, H 10-15	$64,092.00
550-1363	240	LF	82.38	STORM DRAIN PIPE, 36 IN, H 20-25	$19,771.20
550-1420	1500	LF	66.56	STORM DRAIN PIPE, 42 IN, H 1-10	$99,840.00
550-1421	500	LF	76.99	STORM DRAIN PIPE, 42 IN, H 10-15	$38,495.00
550-1423	100	LF	74.89	STORM DRAIN PIPE, 42 IN, H 20-25	$7,489.00
550-1481	200	LF	91.55	STORM DRAIN PIPE, 48 IN, H 10-15	$18,310.00
550-1482	500	LF	62.25	STORM DRAIN PIPE, 48 IN, H 15-20	$31,125.00
550-1483	300	LF	140.07	STORM DRAIN PIPE, 48 IN, H 20-25	$42,021.00
550-1541	200	LF	204.58	STORM DRAIN PIPE, 54 IN, H 10-15	$40,916.00
550-1542	300	LF	293.17	STORM DRAIN PIPE, 54 IN, H 15-20	$87,951.00
550-4118	4	EA	251.79	FLARED END SECTION 18 IN, SIDE DRAIN	$1,007.16
550-4130	4	EA	490.07	FLARED END SECTION 30 IN, SIDE DRAIN	$1,960.28
550-4136	2	EA	529.84	FLARED END SECTION 36 IN, SIDE DRAIN	$1,059.68
550-4236	4	EA	845.53	FLARED END SECTION 36 IN, STORM DRAIN	$3,382.12
603-2024	400	SY	42.10	STN DUMPED RIP RAP, TP 1, 24 IN	$16,840.00
603-2182	500	SY	42.55	STN DUMPED RIP RAP, TP 3, 24 IN	$21,275.00
603-7000	400	SY	3.92	PLASTIC FILTER FABRIC	$1,568.00
				Section Sub Total:	**$11,327,732.14**

Section Base & Paving					
Item Number	Quantity	Units	Unit Price	Item Description	Cost
310-1101	173689	TN	13.89	GR AGGR BASE CRS, INCL MATL	$2,412,540.21
402-3121	52863	TN	36.74	RECYCLED ASPH CONC 25 MM SUPERPAVE, GP 1 OR 2, INCL BITUM	$1,942,186.62
402-3130	22655	TN	37.70	RECYCLED ASPH CONC 12.5 MM SUPERPAVE, GP 2 ONLY, INCL BITUM	$854,093.50
402-3190	27371	TN	39.36	RECYCLED ASPH CONC 19 MM SUPERPAVE, GP 1 OR 2,INCL BITUM	$1,077,322.56
413-1000	4400	GL	0.97	BITUM TACK COAT	$4,268.00
456-2002	9	M	500.00	INDENTATION RUMBLE STRIPS - 2 FT WIDTH	$4,500.00
				Section Sub Total:	**$6,294,910.89**

Section Concrete Work					
Item Number	Quantity	Units	Unit Price	Item Description	Cost
430-0220	35689	SY	43.98	PLAIN PC CONC PVMT, CL 3 CONC, 12 INCH	$1,569,602.22
433-1000	1200	SY	146.83	REINF CONC APPROACH SLAB	$176,196.00
441-0016	2500	SY	27.41	DRIVEWAY CONCRETE, 6 IN TK	$68,525.00
441-6740	47500	LF	9.93	CONC CURB & GUTTER, 8 IN X 30 IN, TP 7	$471,675.00
				Section Sub Total:	**$2,299,900.22**

Section Signing and Striping and Signals					
Item Number	Quantity	Units	Unit Price	Item Description	Cost
500-3101	20	CY	467.31	CLASS A CONCRETE	$9,346.20
636-1020	35	SF	13.30	HIGHWAY SIGNS, TP 1 MATL, REFL SHEETING, TP 3	$465.50
636-1029	250	SF	19.84	HIGHWAY SIGNS, TP 2 MATL, REFL SHEETING, TP 3	$4,960.00
636-1031	395	SF	16.77	HIGHWAY SIGNS, TP 1 MATL, REFL SHEETING TP 6	$6,624.15
636-1032	50	SF	25.13	HIGHWAY SIGNS, TP 2 MATL, REFL SHEETING TP 6	$1,256.50
636-1072	1400	SF	18.30	HIGHWAY SIGNS, ALUM EXTRUDED PANELS, REFL SHEETING, TP 3	$25,620.00
636-2070	100	LF	6.46	GALV STEEL POSTS, TP 7	$646.00
636-2080	830	LF	8.42	GALV STEEL POSTS, TP 8	$6,988.60
636-3000	8100	LB	2.55	GALV STEEL STR SHAPE POST	$20,655.00
636-5010	50	EA	37.98	DELINEATOR, TP 1	$1,899.00
636-9094	48	LF	58.93	PILING IN PLACE, SIGNS, STEEL H, HP 12 X 53	$2,828.64
639-2002	1920	LF	2.34	STEEL WIRE STRAND CABLE, 3/8 IN	$4,492.80
639-4003	14	EA	3687.86	STRAIN POLE, TP III	$51,630.04
639-4004	24	EA	4086.72	STRAIN POLE, TP IV	$98,081.28
647-1000	1	LS	60000.00	TRAFFIC SIGNAL INSTALLATION NO. 1	$60,000.00
647-1000	1	LS	50000.00	TRAFFIC SIGNAL INSTALLATION NO. 2	$50,000.00
647-1000	1	LS	50000.00	TRAFFIC SIGNAL INSTALLATION NO. 3	$50,000.00
47-1000	1	LS	45000.00	TRAFFIC SIGNAL INSTALLATION NO. 4	$45,000.00
647-1000	1	LS	45000.00	TRAFFIC SIGNAL INSTALLATION NO. 5	$45,000.00
647-1000	1	LS	45000.00	TRAFFIC SIGNAL INSTALLATION NO. 6	$45,000.00
647-1000	1	LS	50000.00	TRAFFIC SIGNAL INSTALLATION NO. 7	$50,000.00
647-2150	7	EA	1316.60	PULL BOX, PB-5	$9,216.20
653-0110	2	EA	51.18	THERMOPLASTIC PVMT MARKING, ARROW, TP 1	$102.36
653-0120	96	EA	56.04	THERMOPLASTIC PVMT MARKING, ARROW, TP 2	$5,379.84
653-0170	2	EA	75.54	THERMOPLASTIC PVMT MARKING, ARROW, TP 7	$151.08
653-0210	14	EA	90.22	THERMOPLASTIC PVMT MARKING, WORD, TP 1	$1,263.08

653-1501	95350	LF	0.25	THERMOPLASTIC SOLID TRAF STRIPE, 5 IN, WHITE	$23,837.50
653-1502	76950	LF	0.23	THERMOPLASTIC SOLID TRAF STRIPE, 5 IN, YELLOW	$17,698.50
653-1704	4900	LF	3.20	THERMOPLASTIC SOLID TRAF STRIPE, 24 IN, WHITE	$15,680.00
653-1804	1700	LF	1.49	THERMOPLASTIC SOLID TRAF STRIPE, 8 IN, WHITE	$2,533.00
653-3501	52900	GLF	0.14	THERMOPLASTIC SKIP TRAF STRIPE, 5 IN, WHITE	$7,406.00
654-1001	200	EA	3.23	RAISED PVMT MARKERS TP 1	$646.00
654-1003	1555	EA	3.23	RAISED PVMT MARKERS TP 3	$5,022.65
657-1085	11480	LF	5.02	PREFORMED PLASTIC SOLID PVMT MKG, 8 IN, CONTRAST	$57,629.60
657-3085	1880	GLF	1.68	PREFORMED PLASTIC SKIP PVMT MKG, 8 IN, CONTRAST	$3,158.40
657-6085	12380	LF	6.72	PREFORMED PLASTIC SOLID PVMT MKG, 8 IN, CONTRAST	$83,193.60
682-6233	1100	LF	3.10	CONDUIT, NONMETL, TP 3, 2 IN	$3,410.00
682-7043	650	LF	37.91	MULTI-CELL CONDUIT SYS, 4-WAY, FIBERGLASS	$24,641.50
935-1512	500	LF	9.27	OUTSIDE PLANT FIBER OPTIC CABLE, DROP, SINGLE MODE,	$4,635.00
935-3103	4	EA	660.57	FIBER OPTIC CLOSURE, UNDERGROUND, 24 FIBER	$2,642.28
935-4010	32	EA	28.73	FIBER OPTIC SPLICE, FUSION	$919.36
935-6561	2	EA	3150.00	EXTERNAL TRANSCEIVER, DROP AND REPEAT, 1300 MULTI	$6,300.00
935-8000	6	LS	3297.72	TESTING	$19,786.32
938-1200	1	EA	188.53	PROGRAMMING MONITOR, TYPE A	$188.53
938-8500	1	LS	2546.60	TRAINING	$2,546.60
				Section Sub Total:	**$878,559.99**

Section Guardrail

Item Number	Quantity	Units	Unit Price	Item Description	Cost
641-1100	200	LF	29.84	GUARDRAIL, TP T	$5,968.00
641-1200	3900	LF	12.76	GUARDRAIL, TP W	$49,764.00
641-5001	4	EA	453.29	GUARDRAIL ANCHORAGE, TP 1	$1,813.16
641-5012	4	EA	1520.26	GUARDRAIL ANCHORAGE, TP 12	$6,081.04
				Section Sub Total:	**$63,626.20**

Section Traffic Control

Item Number	Quantity	Units	Unit Price	Item Description	Cost
150-1000	1	LS	300000.00	TRAFFIC CONTROL -	$300,000.00
				Section Sub Total:	**$300,000.00**

Section Landscaping and Erosion Control

Item Number	Quantity	Units	Unit Price	Item Description	Cost
163-0232	65	AC	479.11	TEMPORARY GRASSING	$31,142.15
163-0240	350	TN	199.41	MULCH	$69,793.50
163-0300	10	EA	1132.54	CONSTRUCTION EXIT	$11,325.40
163-0520	2500	LF	12.27	CONSTRUCT AND REMOVE TEMPORARY PIPE SLOPE DRAIN	$30,675.00
163-0531	4	EA	7386.85	CONSTRUCT AND REMOVE SEDIMENT BASIN, TP 1, STA NO -	$29,547.40
165-0010	18000	LF	0.90	MAINTENANCE OF TEMPORARY SILT FENCE, TP A	$16,200.00
165-0030	38000	LF	1.18	MAINTENANCE OF TEMPORARY SILT FENCE, TP C	$44,840.00
165-0060	4	EA	942.37	MAINTENANCE OF TEMPORARY SEDIMENT BASIN, STA NO -	$3,769.48
165-0101	10	EA	360.08	MAINTENANCE OF CONSTRUCTION EXIT	$3,600.80
167-1000	2	EA	1964.70	WATER QUALITY MONITORING AND SAMPLING	$3,929.40
167-1500	24	MO	814.53	WATER QUALITY INSPECTIONS	$19,548.72
171-0010	18000	LF	1.82	TEMPORARY SILT FENCE, TYPE A	$32,760.00
171-0030	38000	LF	3.07	TEMPORARY SILT FENCE, TYPE C	$116,660.00
201-1500	1	LS	1500000.00	CLEARING AND GRUBBING -	$2,250,000.00
700-6910	65	AC	764.04	PERMANENT GRASSING	$49,662.60

700-7000	180	TN	56.35	AGRICULTURAL LIME	$10,143.00
700-7010	165	GL	18.74	LIQUID LIME	$3,092.10
700-8000	23	TN	249.70	FERTILIZER MIXED GRADE	$5,743.10
700-8100	3450	LB	1.44	FERTILIZER NITROGEN CONTENT	$4,968.00
				Section Sub Total:	**$2,737,400.65**

Section Miscellaneous Items

Item Number	Quantity	Units	Unit Price	Item Description	Cost
150-1000	1	LS	15000.00	RAILROAD PROTECTIVE INSURANCE	$15,000.00
153-1300	1	EA	51853.00	FIELD ENGINEERS OFFICE TP 3	$51,853.00
609-1000	13870	SY	26.45	REMOVE ROADWAY SLAB	$366,861.50
634-1200	200	EA	84.51	RIGHT OF WAY MARKERS	$16,902.00
				Section Sub Total:	**$450,616.50**

Total Estimated Cost: $30,924,874.59

PROJECT COST ESTIMATE SUMMARY

Subtotal Construction Cost	**$30,924,874.59**
E&C Rate 10.0 %	$3,092,487.46
Inflation Rate 5.0 % @ 3.0 Years	$5,361,986.69
Total Construction Cost	**$39,379,348.74**
Right-Of-Way	$44,451,650.00
Reimbursable Utilities	$1,750,000.00
Grand Total Project Cost	**$85,580,998.74**

Conceptual Right-of-Way Cost Estimate

Don Brown
Right-of-Way Administrator

Date: June 10, 2005
Project: CSSTP-0006-00 (327)
Required R/W: 140 feet/varies
Project Termini: Tom Miller Road to SR 211
Project Description: West Winder Bypass

P.I. Number: 0006327
No. Parcels: 96

Land:			
Industrial/Commercial - Barrow			
3,070,143 SF x $3.00 / SF =		$ 9,210,429	
Commercial - Barrow			
190,170 SF x $2.00 / SF =		$ 380,340	
Residential – Barrow			
34,227 SF x $1.50 / SF =		$ 51,341	
Residential/Farmland - Barrow			
2,446,567 SF x $0.50 / SF =		$ 1,223,284	
			$ 10,865,394
Improvements:			
13 – residential homes & 1 farm building			$ 1,400,000
Relocation:			
Residential/Farm building 13 @ $22,500			$ 292,500
Damages:			
Proximity – 5 Parcels	=	$ 125,000	
Consequential – 2 Parcels	=	$ 40,000	
Cost To Cure – 4 Parcels	=	$ 80,000	
			$ 245,000

Net Cost of Right-of-Way		$ 12,802,894
Scheduling Contingency	55%	$ 7,041,592
Adm./Court Cost.	60%	$ 11,906,692
Inflation Factor	40%	$ 12,700,472

Total Cost $ 44,451,650

Prepared by: _____
Moreland Altobelli Associates, Inc.

Approved: _____
GDOT R/W

WEST WINDER BYPASS

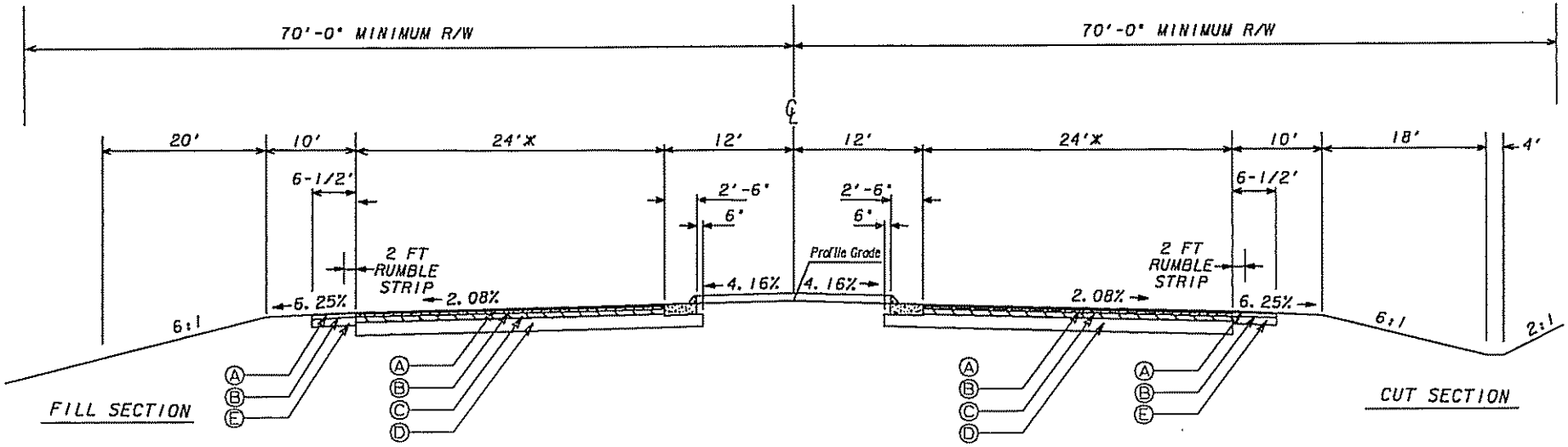

TYPICAL SECTION

NOT TO SCALE

* ADDITIONAL 12' LANES WHERE REQUIRED.

PROPOSED PAVEMENT

- Ⓐ ASPHALTIC CONC. 12.5 mm SUPERPAVE (165 lbs/SY)
- Ⓑ ASPHALTIC CONC. 19 mm SUPERPAVE (220 lbs/SY)
- Ⓒ ASPHALTIC CONC. 25 mm SUPERPAVE (550 lbs/SY)
- Ⓓ GRADED AGGREGATE BASE (12")
- Ⓔ GRADED AGGREGATE BASE (6")

WEST WINDER BYPASS BRIDGE OVER SR 316

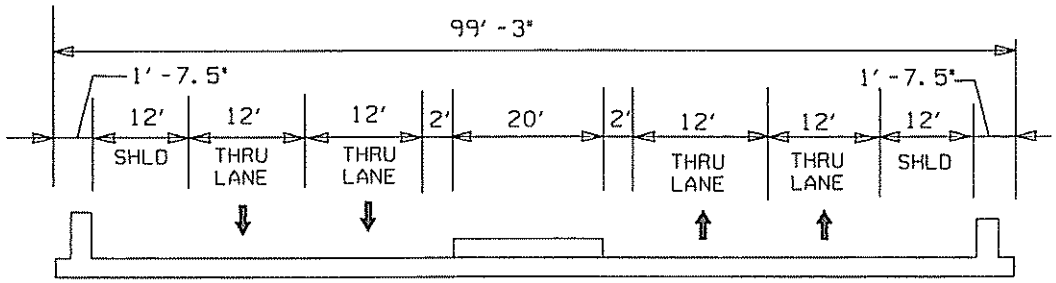

TYPICAL SECTION

NOT TO SCALE

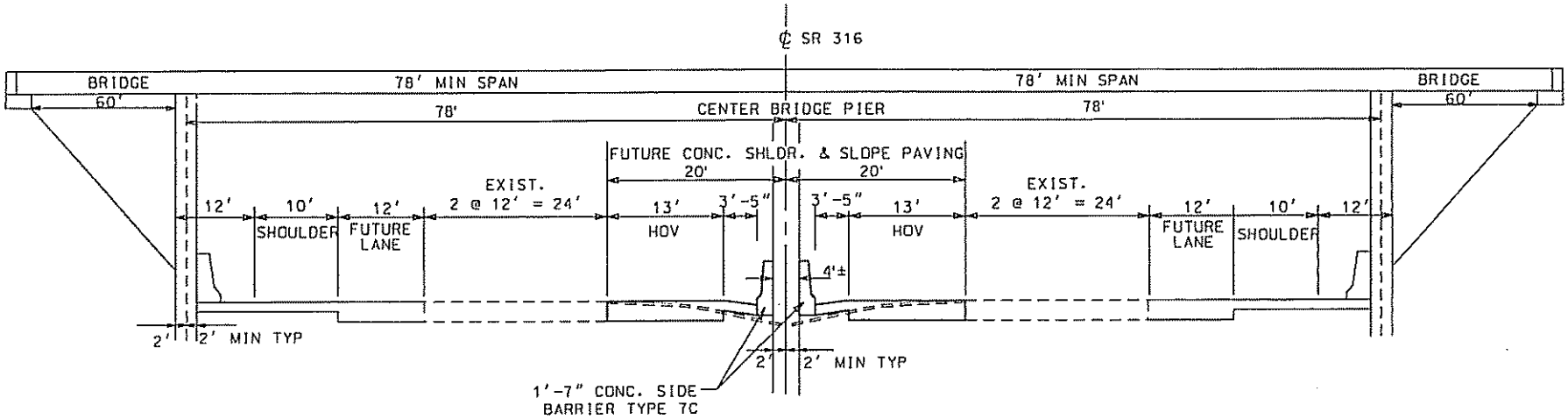

CROSS-SECTION

NOT TO SCALE

WEST WINDER BYPASS BRIDGE
OVER CSX RAILROAD, SR 8 AND BANKHEAD HWY

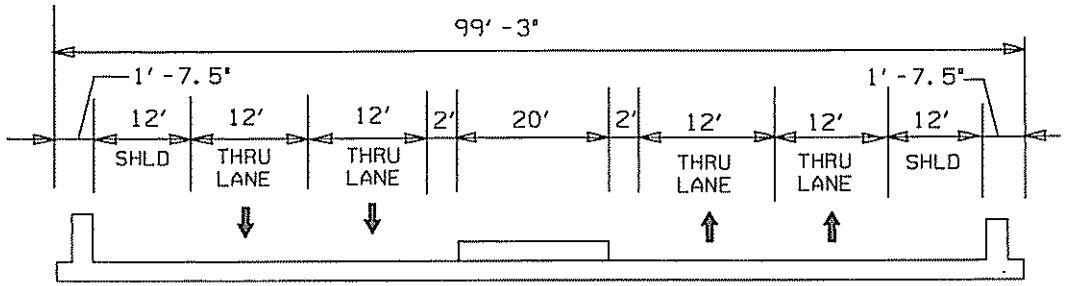

TYPICAL SECTION

NOT TO SCALE

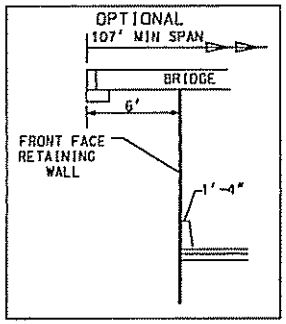

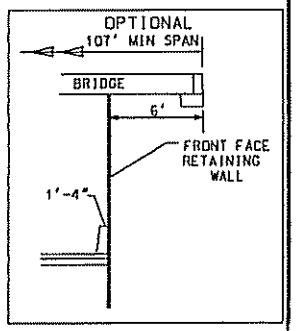

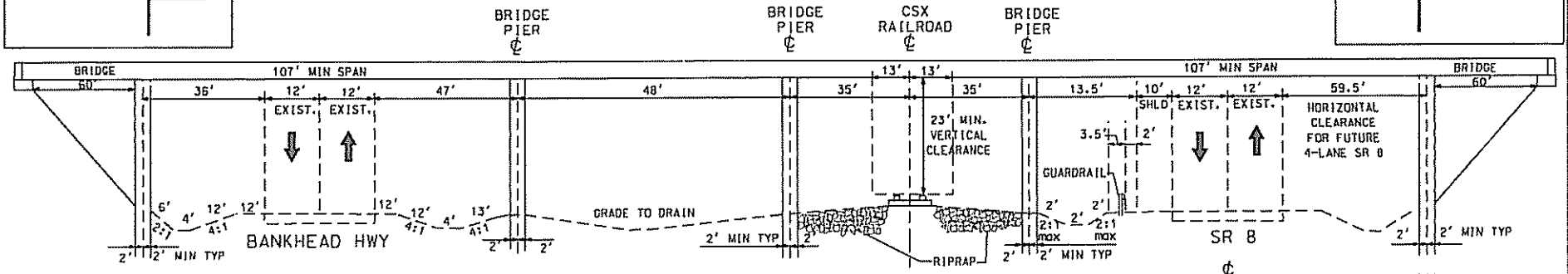

CROSS-SECTION

NOT TO SCALE

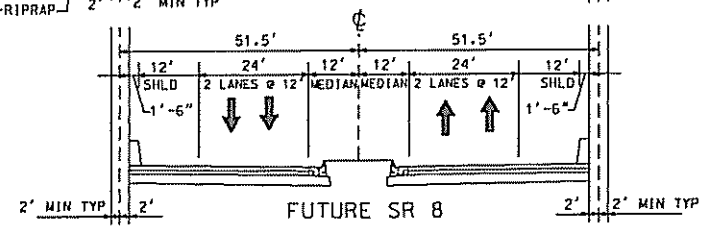

SR 316 RAMPS

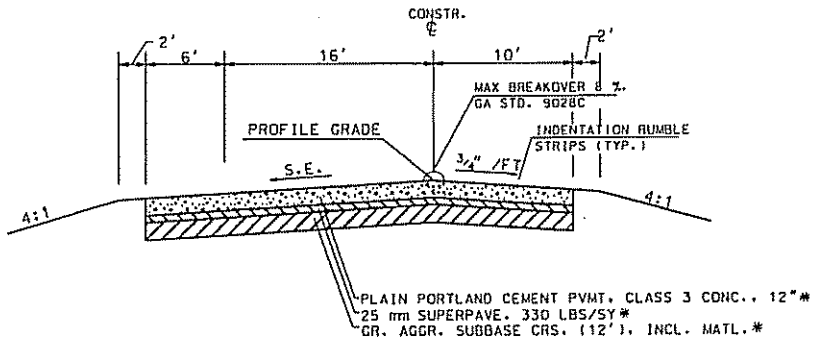

* PAVEMENT SECTION FOR ESTIMATION PURPOSES ONLY

SUPER ELEVATION SECTION

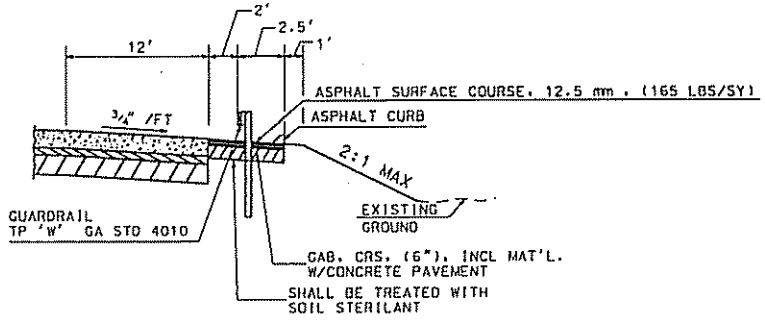

SHOULDER DETAIL FOR GUARDRAIL W/CONCRETE PAVEMENT

(SEE PLANS FOR LOCATION)
(SEE GA. STD. 4051 FOR DETAILS)
N.T.S.

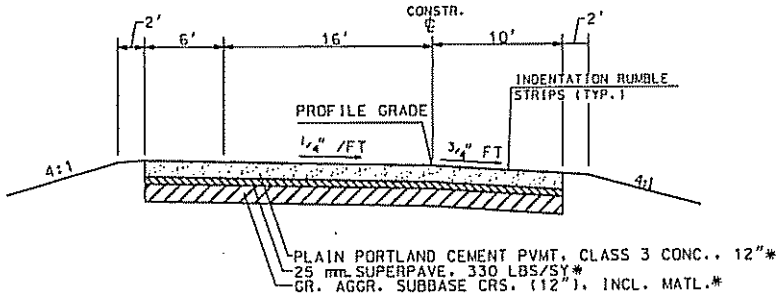

* PAVEMENT SECTION FOR ESTIMATION PURPOSES ONLY

NORMAL CROWN SECTION

TYPICAL SECTION

NOT TO SCALE

STATE	PROJECT NUMBER	SHEET NO.	TOTAL SHEETS
GA.	CSSTP-0006-00(326) & (327)		

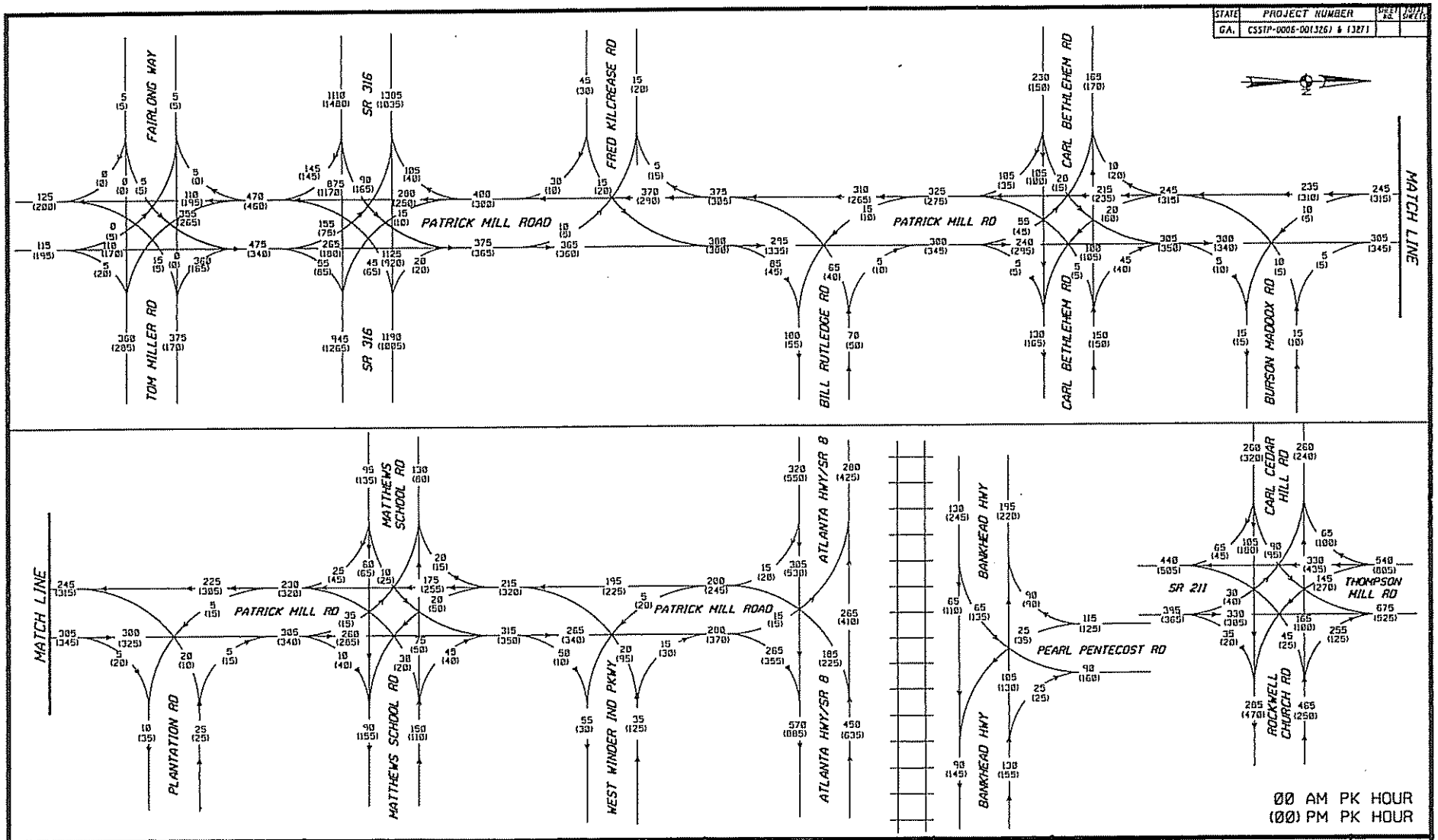

DATE	REVISIONS

Moreland Altobelli Associates, Inc.
2211 Beaver Ruin Road
Suite 190
Norcross, Georgia 30071
Telephone (770) 263-5945

WEST WINDER BYPASS
EXISTING (2005) PEAK HOUR TRAFFIC
TRAFFIC FLOW DIAGRAM

DRAWING NO.
10-01

STATE	PROJECT NUMBER	SHEET NO.	TOTAL SHEETS
GA.	CSSTP-0006-00(326) & (327)		

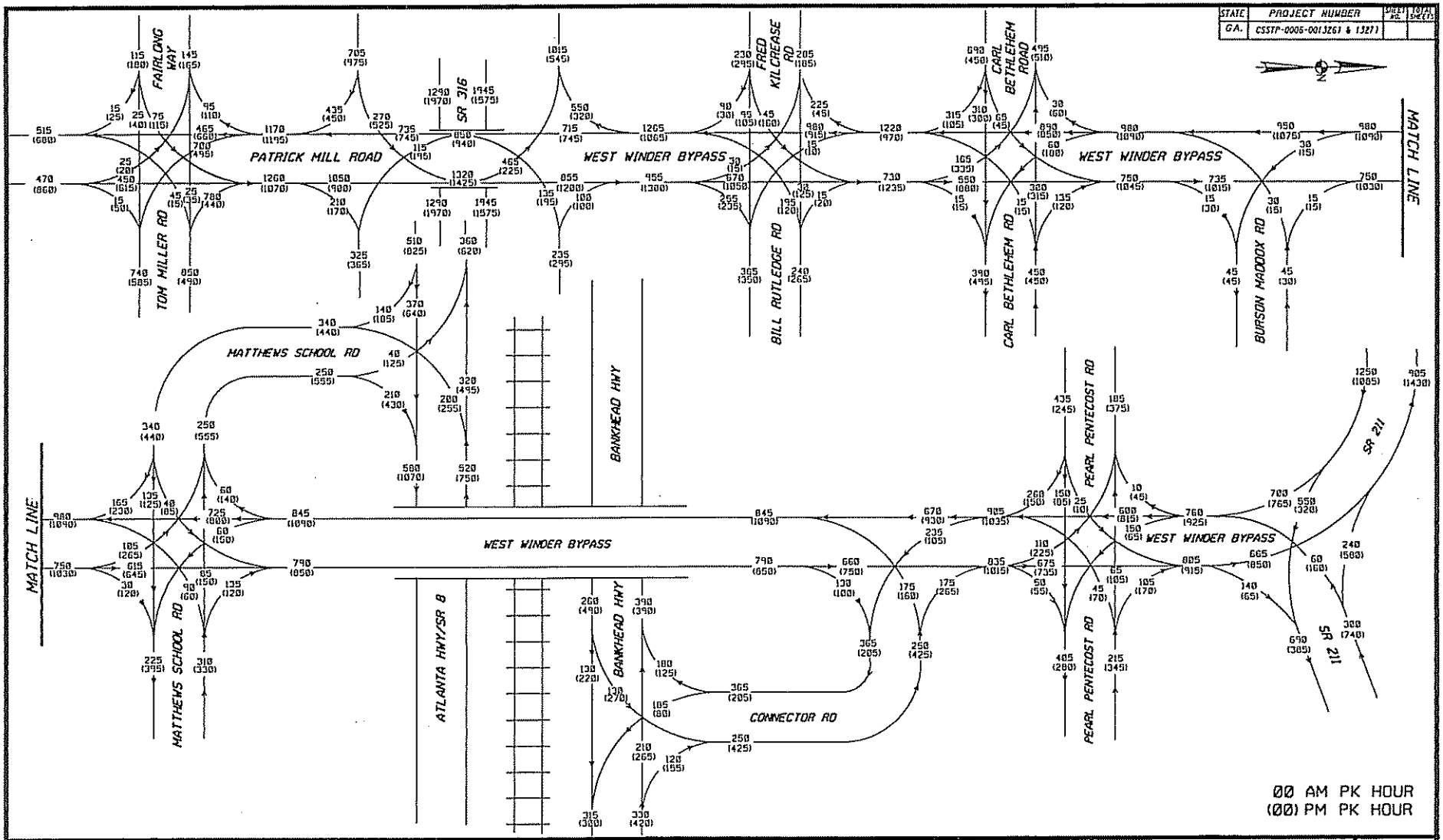

DATE	REVISIONS

Moreland Altobelli Associates, Inc.
2211 Beaver Ruin Road
Suite 190
Norcross, Georgia 30071
Telephone (770) 263-5945

WEST WINDER BYPASS
YEAR 2029 PEAK HOUR TRAFFIC
TRAFFIC FLOW DIAGRAM

DRAWING NO.
10-02

STATE	PROJECT NUMBER	SHEET NO.	TOTAL SHEETS
GA.	CSSTP-0006-00(326) & (327)		

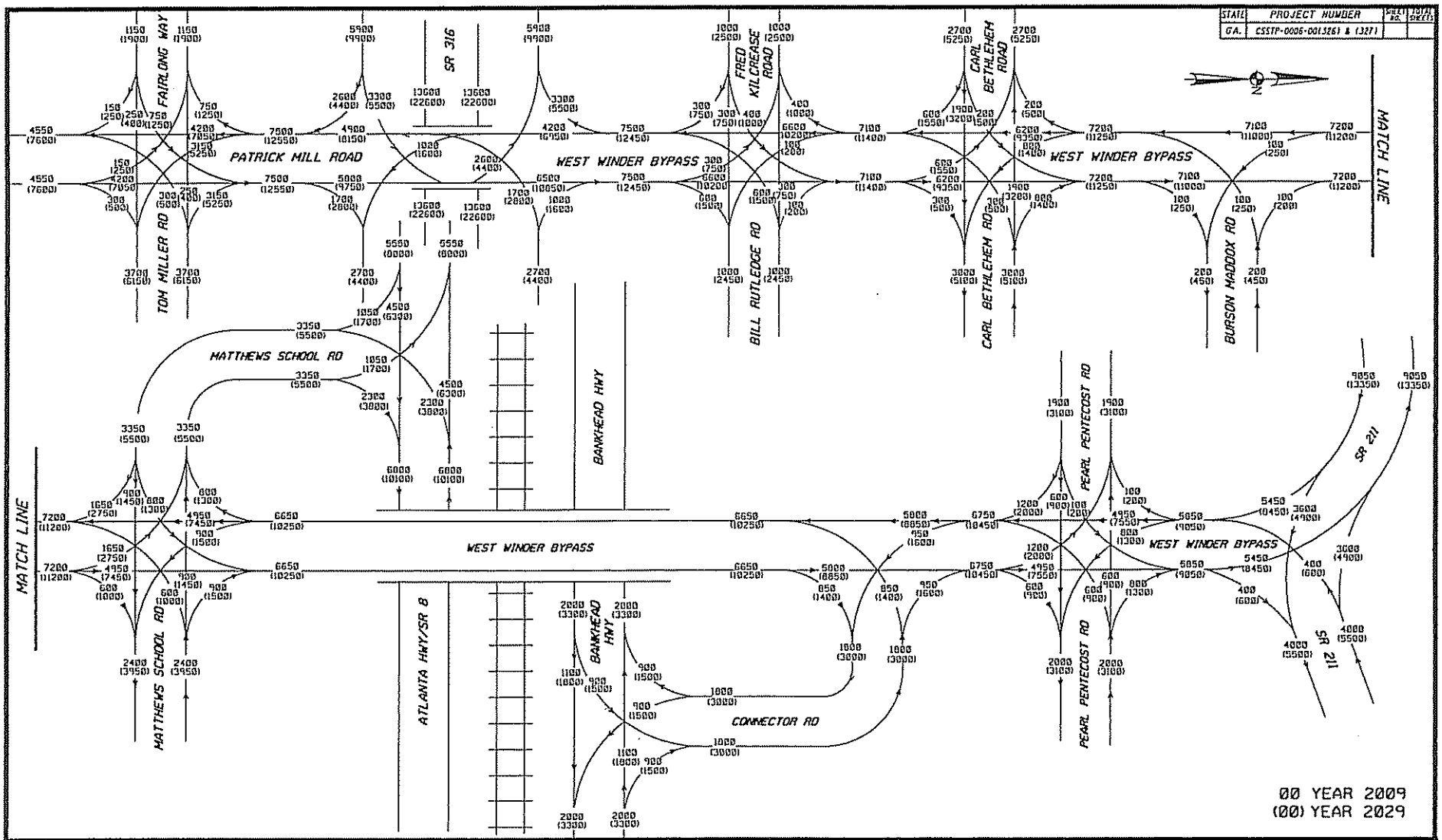

DATE	REVISIONS

Moreland Altobelli Associates, Inc.
2211 Beaver Ruin Road
Suite 130
Norcross, Georgia 30071
Telephone (770) 263-5945

WEST WINDER BYPASS
YEAR 2009/2029 AVERAGE DAILY TRAFFIC
TRAFFIC FLOW DIAGRAM

DRAWING NO.
10-03

TRAFFIC ANALYSIS

Summary of HCS Analysis Results

Intersections	Existing Year 2005		No-Build Year 2029		Proposed Design - Year 2029	
	AM	PM	AM	PM	AM	PM
Patrick Mill Rd @ Tom Miller Rd/Fairlong Way	F*	D*	F	F	D	C
Patrick Mill Rd @ SR 316	C	C	F	F	--	--
West Winder Bypass @ SR 316 EB Ramp	--	--	--	--	C	C
West Winder Bypass @ SR 316 WB Ramp	--	--	--	--	C	B
Patrick Mill Rd @ Fred Kilcrease Rd	B*	B*	F	F	C	D
Patrick Mill Rd @ Bill Rutledge Rd	C*	B*	F	F	---	---
Patrick Mill Rd @ Carl Bethlehem Rd	B*	B*	F	F	C	C
Patrick Mill Rd @ Burson Maddox Rd	B*	B*	F	F	D*	E*
Patrick Mill Rd @ Plantation Rd	B*	B*	F	F	---	---
Patrick Mill Rd @ Mathews School Rd	B*	B*	F	F	---	---
Patrick Mill Rd @ West Winder Industrial Pkwy	B*	C*	F	F	---	---
West Winder Bypass @ Mathews School Rd	---	---	---	---	C	C
Patrick Mill Rd @ SR 8	B*	D*	F	F		
Mathews School Rd @ SR 8	---	---	---	---	B	B
Bankhead Hwy @ Pearl Pentecost Rd	B*	B*	F	F	---	---
Connector Road @ Bankhead Hwy	---	---	---	---	B	B
West Winder Bypass @ Connector Road	---	---	---	---	B	B
West Winder Bypass @ Pearl Pentecost Rd	---	---	---	---	C	C
West Winder Bypass @ SR 211	---	---	---	---	B	B

* For unsignalized intersections, LOS is given for minor street approach.

HCS worksheets are attached.

Summary of Recommended Storage Lengths of Turn Lanes

It is recommended that the storage lengths for turn lanes with traffic volumes less than 200 vehicles per hour use the following minimum storage lengths listed below.

Roadway	Speed Design	Storage Length
West Winder Bypass	45 mph	350
Patrick Mill Road	50 mph	450
Tom Miller Road	50 mph	450
Fred Kilcrease Road	35 mph	250
SR 316 Ramps	50 mph	450
Bill Rutledge Road	30 mph	200
Carl Bethlehem Road	45 mph	350
Matthews School Road	30 mph	200
SR 8	55 mph	500
Bankhead Connector Road	35 mph	200
Bankhead Highway	35 mph	200
Pearl Pentecost Road	40 mph	250
SR 211/Thompson Mill Road	55 mph	500

Turn lane tapers for this project are recommended to be 100 feet for all roadways below 55 mph and 180 feet for roadways with a speed design of 55 mph.

The minimum storage lengths shown above are based on the approximate deceleration lane length plus one vehicle length of 20 feet minus the turn lane taper length of 100 feet. (See 2001 AASHTO guidelines on page 718).

See table on following page for recommended storage lengths for turn lanes with peak hour traffic volumes over 200 vehicles per hour.

Queue lengths for turn lanes with peak hour traffic volumes over 200 vehicles per hour were calculated to determine a recommended storage length. The queue lengths and recommended storage lengths are listed below.

Intersections	Queue Length (feet)		Recommended Storage Length (feet)
	AM Peak	PM Peak	
West Winder Bypass/Patrick Mill Rd @ Tom Miller Rd			
Southbound left turn lane (2 lanes) – West Winder Bypass	195	244	350
Westbound right turn lane – Tom Miller Rd	222	125	450
West Winder Bypass @ SR 316 Ramps			
Southbound right turn lane – West Winder Bypass	189	110	350
Eastbound left turn lane – SR 316 (2 lanes) Ramp	103	200	450
Eastbound right turn lane – SR 316 Ramp	332	343	450
Northbound left turn lane – West Winder Bypass	128	62	350
Northbound right turn lane – West Winder Bypass	160	---	350
West Winder Bypass @ Fred Kilcrease/Bill Rutledge Rd			
Northbound right turn lane – West Winder Bypass	131	144	350
Southbound right turn lane – West Winder Bypass	115	---	350
West Winder Bypass @ Carl Bethlehem Rd			
Northbound left turn lane – West Winder Bypass	----	178	350
Eastbound right turn lane – West Winder Bypass	306	---	350
West Winder Bypass @ Matthews School Rd			
Northbound left turn lane – West Winder Bypass	---	101	350
Matthews School Rd @ SR 8			
Northbound right turn lane – Matthew School Rd	290	173	300
Westbound left turn lane – SR 8	86	33	500
West Winder Bypass @ Bankhead Connector Road			
Southbound left turn lane – West Winder Bypass	65	---	350
Westbound right turn lane – Bankhead Connector Rd	---	172	200
Bankhead Connector Road @ Bankhead Highway			
Eastbound left turn lane – Bankhead Highway	---	113	300
West Winder Bypass @ Pearl Pentecost Road			
Northbound left turn lane – West Winder Bypass	---	107	350
Eastbound right turn lane – Pearl Pentecost Road	202	---	250
West Winder Bypass @ SR 211			
Southbound left turn lane (2 lanes)– West Winder Bypass	254	144	350
Westbound right turn lane – SR 211	156	319	500/2 = 250

HCS2000: Unsignalized Intersections Release 4.1d

TWO-WAY STOP CONTROL SUMMARY

Analyst: MA
Agency/Co.: GDOT
Date Performed: 5/22/2005
Analysis Time Period: AM Peak
Intersection: Patrick Mill Road @ Tom Miller Road/Fairlong Way
Jurisdiction: Barrow County
Units: U. S. Customary
Analysis Year: Year 2005
Project ID:
East/West Street: Tom Miller Road/Fairlong Way
North/South Street: Patrick Mill Road
Intersection Orientation: NS Study period (hrs): 0.25

Vehicle Volumes and Adjustments

Major Street: Approach	Northbound			Southbound		
Movement	1	2	3	4	5	6
	L	T	R	L	T	R
Volume	0	110	5	355	110	5
Peak-Hour Factor, PHF	0.92	0.92	0.92	0.92	0.92	0.92
Hourly Flow Rate, HFR	0	119	5	385	119	5
Percent Heavy Vehicles	0	--	--	0	--	--
Median Type/Storage	Undivided			/		
RT Channelized?						
Lanes	0	1	0	0	1	0
Configuration		LTR			LTR	
Upstream Signal?		No			No	

Minor Street: Approach	Westbound			Eastbound		
Movement	7	8	9	10	11	12
	L	T	R	L	T	R
Volume	15	0	360	5	0	0
Peak Hour Factor, PHF	0.92	0.92	0.92	0.92	0.92	0.92
Hourly Flow Rate, HFR	16	0	391	5	0	0
Percent Heavy Vehicles	0	0	0	0	0	0
Percent Grade (%)		0			0	
Flared Approach: Exists?/Storage			No /			No /
Lanes	0	1	0	0	1	0
Configuration		LTR			LTR	

Delay, Queue Length, and Level of Service

Approach	NB	SB	Westbound			Eastbound		
Movement	1	4	7	8	9	10	11	12
Lane Config	LTR	LTR		LTR			LTR	
v (vph)	0	385		407			5	
C(m) (vph)	1475	1475		795			73	
v/c	0.00	0.26		0.51			0.07	
95% queue length	0.00	1.05		2.97			0.22	
Control Delay	7.4	8.3		14.2			57.9	
LOS	A	A		B			F	
Approach Delay				14.2			57.9	
Approach LOS				B			F	

HCS2000: Unsignalized Intersections Release 4.1d

TWO-WAY STOP CONTROL SUMMARY

Analyst: MA
Agency/Co.: GDOT
Date Performed: 5/22/2005
Analysis Time Period: PM Peak
Intersection: Patrick Mill Rd @ Tom Miller Rd/Fairlong Way
Jurisdiction: Barrow County
Units: U. S. Customary
Analysis Year: Year 2005
Project ID:
East/West Street: Tom Miller Rd/Fairlong Way
North/South Street: Patrick Mill Road
Intersection Orientation: NS Study period (hrs): 0.25

Vehicle Volumes and Adjustments

Major Street: Approach	Northbound			Southbound		
Movement	1	2	3	4	5	6
	L	T	R	L	T	R
Volume	5	170	20	265	195	0
Peak-Hour Factor, PHF	0.92	0.92	0.92	0.92	0.92	0.92
Hourly Flow Rate, HFR	5	184	21	288	211	0
Percent Heavy Vehicles	0	--	--	0	--	--
Median Type/Storage	Undivided			/		
RT Channelized?						
Lanes	0	1	0	0	1	0
Configuration		LTR			LTR	
Upstream Signal?		No			No	

Minor Street: Approach	Westbound			Eastbound		
Movement	7	8	9	10	11	12
	L	T	R	L	T	R
Volume	5	0	165	5	0	0
Peak Hour Factor, PHF	0.92	0.92	0.92	0.92	0.92	0.92
Hourly Flow Rate, HFR	5	0	179	5	0	0
Percent Heavy Vehicles	0	0	0	0	0	0
Percent Grade (%)		0			0	
Flared Approach: Exists?/Storage			No /			No /
Lanes	0	1	0	0	1	0
Configuration		LTR			LTR	

Delay, Queue Length, and Level of Service

Approach	NB	SB	Westbound			Eastbound		
Movement	1	4	7	8	9	10	11	12
Lane Config	LTR	LTR		LTR			LTR	
v (vph)	5	288		184			5	
C(m) (vph)	1372	1378		777			127	
v/c	0.00	0.21		0.24			0.04	
95% queue length	0.01	0.79		0.92			0.12	
Control Delay	7.6	8.3		11.1			34.5	
LOS	A	A		B			D	
Approach Delay				11.1			34.5	
Approach LOS				B			D	

HCS2000: Signalized Intersections Release 4.1d

Analyst: MA
Agency: GDOT
Date: 5/22/2005
Period: AM Peak
Project ID:
E/W St: SR 316

Inter.: Patrick Mill Road at SR 316
Area Type: All other areas
Jurisd: Barrow County
Year : Year 2005

N/S St: Patrick Mill Road

SIGNALIZED INTERSECTION SUMMARY

	Eastbound			Westbound			Northbound			Southbound		
	L	T	R	L	T	R	L	T	R	L	T	R
No. Lanes	1	2	1	1	2	1	1	1	0	1	1	0
LGConfig	L	T	R	L	T	R	L	TR		L	TR	
Volume	90	875	145	45	1125	20	155	265	55	15	280	105
Lane Width	12.0	12.0	12.0	12.0	12.0	12.0	12.0	12.0		12.0	12.0	
RTOR Vol			0			0			0			0

Duration 0.25 Area Type: All other areas

Signal Operations

Phase Combination		1	2	3	4			5	6	7	8
EB	Left	P	P			NB	Left	P	P		
	Thru	P	P				Thru	P	P		
	Right	P	P				Right	P	P		
	Peds						Peds				
WB	Left		P			SB	Left		P		
	Thru		P				Thru		P		
	Right		P				Right		P		
	Peds						Peds				
NB	Right					EB	Right	P			
SB	Right					WB	Right				
Green		8.0	50.0					8.0	34.0		
Yellow		4.0	4.0					4.0	4.0		
All Red		1.0	1.0					1.0	1.0		

Cycle Length: 120.0 secs

Intersection Performance Summary

Appr/ Lane Grp	Lane Group Capacity	Adj Sat Flow Rate (s)	Ratios v/c	Ratios g/C	Lane Group Delay	Lane Group LOS	Approach Delay	Approach LOS
Eastbound								
L	183	1805	0.54	0.53	33.1	C		
T	1895	3610	0.50	0.52	19.3	B	19.1	B
R	1023	1615	0.15	0.63	9.3	A		
Westbound								
L	219	526	0.22	0.42	24.9	C		
T	1504	3610	0.81	0.42	35.8	D	35.1	D
R	673	1615	0.03	0.42	20.8	C		
Northbound								
L	227	1805	0.74	0.39	47.3	D		
TR	725	1851	0.48	0.39	29.6	C	35.4	D
Southbound								
L	297	1049	0.05	0.28	31.6	C		
TR	516	1822	0.81	0.28	52.9	D	52.1	D

Intersection Delay = 31.7 (sec/veh) Intersection LOS = C

HCS2000: Signalized Intersections Release 4.1d

Analyst: MA
Agency: GDOT
Date: 5/22/2005
Period: PM Peak
Project ID:
E/W St: SR 316

Inter.: Patrick Mill Road at SR 316
Area Type: All other areas
Jurisd: Barrow County
Year : Year 2005

N/S St: Patrick Mill Road

SIGNALIZED INTERSECTION SUMMARY

	Eastbound			Westbound			Northbound			Southbound		
	L	T	R	L	T	R	L	T	R	L	T	R
No. Lanes	1	2	1	1	2	1	1	1	0	1	1	0
LGConfig	L	T	R	L	T	R	L	TR		L	TR	
Volume	165	1170	145	65	920	20	75	180	85	10	250	40
Lane Width	12.0	12.0	12.0	12.0	12.0	12.0	12.0	12.0		12.0	12.0	
RTOR Vol			0			0			0			0

Duration 0.25 Area Type: All other areas

Signal Operations

Phase Combination		1	2	3	4			5	6	7	8
EB	Left	P	P			NB	Left	P	P		
	Thru	P	P				Thru		P		
	Right	P	P				Right		P		
	Peds						Peds				
WB	Left		P			SB	Left	P	P		
	Thru		P				Thru		P		
	Right		P				Right		P		
	Peds						Peds				
NB	Right					EB	Right	P			
SB	Right					WB	Right	P			
Green		8.0	50.0					8.0	34.0		
Yellow		4.0	4.0					4.0	4.0		
All Red		1.0	1.0					1.0	1.0		

Cycle Length: 120.0 secs

Intersection Performance Summary

Appr/ Lane Grp	Lane Group Capacity	Adj Sat Flow Rate (s)	Ratios v/c	Ratios g/C	Lane Group Delay	Lane Group LOS	Approach Delay	Approach LOS
Eastbound								
L	238	1805	0.75	0.53	39.7	D		
T	1895	3610	0.67	0.52	22.8	C	23.4	C
R	1023	1615	0.15	0.63	9.3	A		
Westbound								
L	118	284	0.60	0.42	47.9	D		
T	1504	3610	0.66	0.42	30.6	C	31.4	C
R	848	1615	0.03	0.52	13.8	B		
Northbound								
L	307	1805	0.27	0.39	26.9	C		
TR	513	1809	0.56	0.28	41.0	D	37.9	D
Southbound								
L	329	1805	0.03	0.39	23.7	C		
TR	527	1861	0.60	0.28	42.0	D	41.4	D

Intersection Delay = 29.3 (sec/veh) Intersection LOS = C

HCS2000: Unsignalized Intersections Release 4.1d

TWO-WAY STOP CONTROL SUMMARY

Analyst: MA
Agency/Co.: GDOT
Date Performed: 5/22/2005
Analysis Time Period: AM Peak
Intersection: Patrick Mill Road @ Fred Kilcrease Road
Jurisdiction: Barrow County
Units: U. S. Customary
Analysis Year: Year 2005
Project ID:
East/West Street: Fred Kilcrease Road
North/South Street: Patrick Mill Road
Intersection Orientation: NS Study period (hrs): 0.25

Vehicle Volumes and Adjustments

Major Street: Approach	Northbound			Southbound		
Movement	1	2	3	4	5	6
	L	T	R	L	T	R
Volume	10	365			370	5
Peak-Hour Factor, PHF	0.92	0.92			0.92	0.92
Hourly Flow Rate, HFR	10	396			402	5
Percent Heavy Vehicles	0	--	--		--	--
Median Type/Storage	Undivided		/			
RT Channelized?						
Lanes	0	1			1	0
Configuration	LT					TR
Upstream Signal?		No			No	

Minor Street: Approach	Westbound			Eastbound		
Movement	7	8	9	10	11	12
	L	T	R	L	T	R
Volume				15		30
Peak Hour Factor, PHF				0.92		0.92
Hourly Flow Rate, HFR				16		32
Percent Heavy Vehicles				0		0
Percent Grade (%)		0			0	
Flared Approach: Exists?/Storage			/		No	/
Lanes				0	0	
Configuration					LR	

Delay, Queue Length, and Level of Service

Approach	NB	SB	Westbound			Eastbound		
Movement	1	4	7	8	9	10	11	12
Lane Config	LT						LR	
v (vph)	10						48	
C(m) (vph)	1163						502	
v/c	0.01						0.10	
95% queue length	0.03						0.32	
Control Delay	8.1						12.9	
LOS	A						B	
Approach Delay							12.9	
Approach LOS							B	

HCS2000: Unsignalized Intersections Release 4.1d

TWO-WAY STOP CONTROL SUMMARY

Analyst: MA
Agency/Co.: GDOT
Date Performed: 5/22/2005
Analysis Time Period: PM Peak
Intersection: Patrick Mill Road @ Fred Kilcrease Road
Jurisdiction: Barrow County
Units: U. S. Customary
Analysis Year: Year 2005
Project ID:
East/West Street: Fred Kilcrease Road
North/South Street: Patrick Mill Road
Intersection Orientation: NS Study period (hrs): 0.25

Vehicle Volumes and Adjustments

Major Street: Approach	Northbound			Southbound		
Movement	1	2	3	4	5	6
	L	T	R	L	T	R
Volume	5	360			290	15
Peak-Hour Factor, PHF	0.92	0.92			0.92	0.92
Hourly Flow Rate, HFR	5	391			315	16
Percent Heavy Vehicles	0	--	--		--	--
Median Type/Storage	Undivided		/			
RT Channelized?						
Lanes	0	1			1	0
Configuration		LT				TR
Upstream Signal?		No			No	

Minor Street: Approach	Westbound			Eastbound		
Movement	7	8	9	10	11	12
	L	T	R	L	T	R
Volume				20		10
Peak Hour Factor, PHF				0.92		0.92
Hourly Flow Rate, HFR				21		10
Percent Heavy Vehicles				0		0
Percent Grade (%)		0			0	
Flared Approach: Exists?/Storage			/			No /
Lanes				0		0
Configuration					LR	

Delay, Queue Length, and Level of Service

Approach	NB	SB	Westbound			Eastbound		
Movement	1	4	7	8	9	10	11	12
Lane Config	LT						LR	
v (vph)	5						31	
C(m) (vph)	1240						462	
v/c	0.00						0.07	
95% queue length	0.01						0.21	
Control Delay	7.9						13.4	
LOS	A						B	
Approach Delay							13.4	
Approach LOS							B	

HCS2000: Unsignalized Intersections Release 4.1d

TWO-WAY STOP CONTROL SUMMARY

Analyst: MA
Agency/Co.: GDOT
Date Performed: 5/22/2005
Analysis Time Period: AM Peak
Intersection: Patrick Mill Road @ Bill Rutledge Road
Jurisdiction: Barrow County
Units: U. S. Customary
Analysis Year: Year 2005
Project ID:
East/West Street: Bill Rutledge Road
North/South Street: Patrick Mill Road
Intersection Orientation: NS Study period (hrs): 0.25

Vehicle Volumes and Adjustments

Major Street: Approach	Northbound			Southbound		
Movement	1	2	3	4	5	6
	L	T	R	L	T	R
Volume		295	85	15	310	
Peak-Hour Factor, PHF		0.92	0.92	0.92	0.92	
Hourly Flow Rate, HFR		320	92	16	336	
Percent Heavy Vehicles		--	--	0	--	--
Median Type/Storage	Undivided			/		
RT Channelized?						
Lanes		1	0	0	1	
Configuration			TR		LT	
Upstream Signal?		No			No	

Minor Street: Approach	Westbound			Eastbound		
Movement	7	8	9	10	11	12
	L	T	R	L	T	R
Volume	65		5			
Peak Hour Factor, PHF	0.92		0.92			
Hourly Flow Rate, HFR	70		5			
Percent Heavy Vehicles	0		0			
Percent Grade (%)		0			0	
Flared Approach: Exists?/Storage			No /			/
Lanes	0		0			
Configuration		LR				

Delay, Queue Length, and Level of Service

Approach	NB	SB	Westbound			Eastbound		
Movement	1	4	7	8	9	10	11	12
Lane Config		LT		LR				
v (vph)		16		75				
C(m) (vph)		1158		397				
v/c		0.01		0.19				
95% queue length		0.04		0.69				
Control Delay		8.2		16.2				
LOS		A		C				
Approach Delay				16.2				
Approach LOS				C				

HCS2000: Unsignalized Intersections Release 4.1d

TWO-WAY STOP CONTROL SUMMARY

Analyst: MA
Agency/Co.: GDOT
Date Performed: 5/22/2005
Analysis Time Period: PM Peak
Intersection: Patrick Mill Road @ Bill Rutledge Road
Jurisdiction: Barrow County
Units: U. S. Customary
Analysis Year: Year 2005
Project ID:
East/West Street: Bill Rutledge Road
North/South Street: Patrick Mill Road
Intersection Orientation: NS Study period (hrs): 0.25

Vehicle Volumes and Adjustments

Major Street: Approach	Northbound			Southbound		
Movement	1	2	3	4	5	6
	L	T	R	L	T	R
Volume		335	45	10	265	
Peak-Hour Factor, PHF		0.92	0.92	0.92	0.92	
Hourly Flow Rate, HFR		364	48	10	288	
Percent Heavy Vehicles		--	--	0	--	--
Median Type/Storage	Undivided			/		
RT Channelized?						
Lanes		1	0	0	1	
Configuration			TR	LT		
Upstream Signal?		No			No	

Minor Street: Approach	Westbound			Eastbound		
Movement	7	8	9	10	11	12
	L	T	R	L	T	R
Volume	40		10			
Peak Hour Factor, PHF	0.92		0.92			
Hourly Flow Rate, HFR	43		10			
Percent Heavy Vehicles	0		0			
Percent Grade (%)		0			0	
Flared Approach: Exists?/Storage			No /			/
Lanes	0		0			
Configuration		LR				

Delay, Queue Length, and Level of Service

Approach	NB	SB	Westbound			Eastbound		
Movement	1	4	7	8	9	10	11	12
Lane Config		LT		LR				
v (vph)		10		53				
C(m) (vph)		1158		439				
v/c		0.01		0.12				
95% queue length		0.03		0.41				
Control Delay		8.1		14.3				
LOS		A		B				
Approach Delay				14.3				
Approach LOS				B				

HCS2000: Unsignalized Intersections Release 4.1d

Phone: Fax:
E-Mail:

ALL-WAY STOP CONTROL(AWSC) ANALYSIS

Analyst: ma
Agency/Co.: GDOT
Date Performed: 5/22/2005
Analysis Time Period: AM Peak
Intersection: Patrick Mill Road @ Carl Bethlehem Road
Jurisdiction: Barrow County
Units: U. S. Customary
Analysis Year: Year 2005
Project ID:
East/West Street: Carl Bethlehem Road
North/South Street: Patrick Mill Road

Worksheet 2 - Volume Adjustments and Site Characteristics

	Eastbound			Westbound			Northbound			Southbound		
	L	T	R	L	T	R	L	T	R	L	T	R
Volume	20	105	105	5	100	45	55	240	5	20	215	10
% Thrus Left Lane												

	Eastbound		Westbound		Northbound		Southbound	
	L1	L2	L1	L2	L1	L2	L1	L2
Configuration	LTR		LTR		LTR		LTR	
PHF	0.92		0.92		0.92		0.92	
Flow Rate	249		161		324		264	
% Heavy Veh	0		0		0		0	
No. Lanes	1		1		1		1	
Opposing-Lanes	1		1		1		1	
Conflicting-lanes	1		1		1		1	
Geometry group	1		1		1		1	

Duration, T 0.25 hrs.

Worksheet 3 - Saturation Headway Adjustment Worksheet

	Eastbound		Westbound		Northbound		Southbound	
	L1	L2	L1	L2	L1	L2	L1	L2
Flow Rates:								
Total in Lane	249		161		324		264	
Left-Turn	21		5		59		21	
Right-Turn	114		48		5		10	
Prop. Left-Turns	0.1		0.0		0.2		0.1	
Prop. Right-Turns	0.5		0.3		0.0		0.0	
Prop. Heavy Vehicle	0.0		0.0		0.0		0.0	
Geometry Group	1		1		1		1	
Adjustments Exhibit 17-33:								
hLT-adj	0.2		0.2		0.2		0.2	
hRT-adj	-0.6		-0.6		-0.6		-0.6	
hHV-adj	1.7		1.7		1.7		1.7	
hadj, computed	-0.3		-0.2		0.0		-0.0	

Worksheet 4 - Departure Headway and Service Time

	Eastbound		Westbound		Northbound		Southbound	
	L1	L2	L1	L2	L1	L2	L1	L2
Flow rate	249		161		324		264	
hd, initial value	3.20	3.20	3.20	3.20	3.20	3.20	3.20	3.20
x, initial	0.22		0.14		0.29		0.23	
hd, final value	5.68		5.95		5.65		5.72	
x, final value	0.39		0.27		0.51		0.42	
Move-up time, m	2.0		2.0		2.0		2.0	
Service Time	3.7		4.0		3.6		3.7	

Worksheet 5 - Capacity and Level of Service

	Eastbound		Westbound		Northbound		Southbound	
	L1	L2	L1	L2	L1	L2	L1	L2
Flow Rate	249		161		324		264	
Service Time	3.7		4.0		3.6		3.7	
Utilization, x	0.39		0.27		0.51		0.42	
Dep. headway, hd	5.68		5.95		5.65		5.72	
Capacity	499		411		574		514	
Delay	12.31		11.10		14.34		12.80	
LOS	B		B		B		B	
Approach:								
Delay	12.31		11.10		14.34		12.80	
LOS	B		B		B		B	

Intersection Delay 12.90 Intersection LOS B

HCS2000: Unsignalized Intersections Release 4.1d

ALL-WAY STOP CONTROL(AWSC) ANALYSIS

Analyst: ma
Agency/Co.: GDOT
Date Performed: 5/22/2005
Analysis Time Period: PM Peak
Intersection: Patrick Mill Road @ Carl Bethlehem Road
Jurisdiction: Barrow County
Units: U. S. Customary
Analysis Year: Year 2005
Project ID:
East/West Street: Carl Bethlehem Road
North/South Street: Patrick Mill Road

Worksheet 2 - Volume Adjustments and Site Characteristics

	Eastbound			Westbound			Northbound			Southbound		
	L	T	R	L	T	R	L	T	R	L	T	R
Volume	15	100	35	5	105	40	45	295	5	60	235	20
% Thrus Left Lane												

	Eastbound		Westbound		Northbound		Southbound	
	L1	L2	L1	L2	L1	L2	L1	L2
Configuration	LTR		LTR		LTR		LTR	
PHF	0.92		0.92		0.92		0.92	
Flow Rate	162		162		373		341	
% Heavy Veh	0		0		0		0	
No. Lanes	1		1		1		1	
Opposing-Lanes	1		1		1		1	
Conflicting-lanes	1		1		1		1	
Geometry group	1		1		1		1	

Duration, T 0.25 hrs.

Worksheet 3 - Saturation Headway Adjustment Worksheet

	Eastbound		Westbound		Northbound		Southbound	
	L1	L2	L1	L2	L1	L2	L1	L2
Flow Rates:								
Total in Lane	162		162		373		341	
Left-Turn	16		5		48		65	
Right-Turn	38		43		5		21	
Prop. Left-Turns	0.1		0.0		0.1		0.2	
Prop. Right-Turns	0.2		0.3		0.0		0.1	
Prop. Heavy Vehicle	0.0		0.0		0.0		0.0	
Geometry Group	1		1		1		1	
Adjustments Exhibit 17-33:								
hLT-adj	0.2		0.2		0.2		0.2	
hRT-adj	-0.6		-0.6		-0.6		-0.6	
hHV-adj	1.7		1.7		1.7		1.7	
hadj, computed	-0.1		-0.2		0.0		0.0	

Worksheet 4 - Departure Headway and Service Time

	Eastbound		Westbound		Northbound		Southbound	
	L1	L2	L1	L2	L1	L2	L1	L2
Flow rate	162		162		373		341	
hd, initial value	3.20	3.20	3.20	3.20	3.20	3.20	3.20	3.20
x, initial	0.14		0.14		0.33		0.30	
hd, final value	6.16		6.13		5.55		5.58	
x, final value	0.28		0.28		0.57		0.53	
Move-up time, m	2.0		2.0		2.0		2.0	
Service Time	4.2		4.1		3.5		3.6	

Worksheet 5 - Capacity and Level of Service

	Eastbound		Westbound		Northbound		Southbound	
	L1	L2	L1	L2	L1	L2	L1	L2
Flow Rate	162		162		373		341	
Service Time	4.2		4.1		3.5		3.6	
Utilization, x	0.28		0.28		0.57		0.53	
Dep. headway, hd	6.16		6.13		5.55		5.58	
Capacity	412		412		619		591	
Delay	11.51		11.45		15.77		14.67	
LOS	B		B		C		B	
Approach:								
Delay	11.51		11.45		15.77		14.67	
LOS	B		B		C		B	

Intersection Delay 14.07 Intersection LOS B

HCS2000: Unsignalized Intersections Release 4.1d

TWO-WAY STOP CONTROL SUMMARY

Analyst: MA
Agency/Co.: GDOT
Date Performed: 5/22/2005
Analysis Time Period: AM Peak
Intersection: Patrick Mill Road @ Burson Maddox Road
Jurisdiction: Barrow County
Units: U. S. Customary
Analysis Year: Year 2005
Project ID:
East/West Street: Burson Maddox Road
North/South Street: Patrick Mill Road
Intersection Orientation: NS Study period (hrs): 0.25

Vehicle Volumes and Adjustments

Major Street: Approach	Northbound			Southbound		
Movement	1	2	3	4	5	6
	L	T	R	L	T	R
Volume		300	5	10	235	
Peak-Hour Factor, PHF		0.92	0.92	0.92	0.92	
Hourly Flow Rate, HFR		326	5	10	255	
Percent Heavy Vehicles		--	--	0	--	--
Median Type/Storage	Undivided			/		
RT Channelized?						
Lanes		1	0	0	1	
Configuration			TR	LT		
Upstream Signal?		No			No	

Minor Street: Approach	Westbound			Eastbound		
Movement	7	8	9	10	11	12
	L	T	R	L	T	R
Volume	10		5			
Peak Hour Factor, PHF	0.92		0.92			
Hourly Flow Rate, HFR	10		5			
Percent Heavy Vehicles	0		0			
Percent Grade (%)		0			0	
Flared Approach: Exists?/Storage			No /			/
Lanes	0		0			
Configuration		LR				

Delay, Queue Length, and Level of Service

Approach	NB	SB	Westbound			Eastbound		
Movement	1	4	7	8	9	10	11	12
Lane Config		LT		LR				
v (vph)		10		15				
C(m) (vph)		1240		523				
v/c		0.01		0.03				
95% queue length		0.02		0.09				
Control Delay		7.9		12.1				
LOS		A		B				
Approach Delay				12.1				
Approach LOS				B				

HCS2000: Unsignalized Intersections Release 4.1d

TWO-WAY STOP CONTROL SUMMARY

Analyst: MA
Agency/Co.: GDOT
Date Performed: 5/22/2005
Analysis Time Period: PM Peak
Intersection: Patrick Mill Road @ Burson Maddox Road
Jurisdiction: Barrow County
Units: U. S. Customary
Analysis Year: Year 2005
Project ID:
East/West Street: Burson Maddox Road
North/South Street: Patrick Mill Road
Intersection Orientation: NS Study period (hrs): 0.25

Vehicle Volumes and Adjustments

Major Street: Approach	Northbound			Southbound		
Movement	1	2	3	4	5	6
	L	T	R	L	T	R
Volume		340	10	5	310	
Peak-Hour Factor, PHF		0.92	0.92	0.92	0.92	
Hourly Flow Rate, HFR		369	10	5	336	
Percent Heavy Vehicles		--	--	0	--	--
Median Type/Storage	Undivided			/		
RT Channelized?						
Lanes		1	0	0	1	
Configuration			TR	LT		
Upstream Signal?		No			No	

Minor Street: Approach	Westbound			Eastbound		
Movement	7	8	9	10	11	12
	L	T	R	L	T	R
Volume	5		5			
Peak Hour Factor, PHF	0.92		0.92			
Hourly Flow Rate, HFR	5		5			
Percent Heavy Vehicles	0		0			
Percent Grade (%)		0			0	
Flared Approach: Exists?/Storage			No /			/
Lanes	0		0			
Configuration		LR				

Delay, Queue Length, and Level of Service

Approach	NB	SB	Westbound			Eastbound		
Movement	1	4	7	8	9	10	11	12
Lane Config		LT		LR				
v (vph)		5		10				
C(m) (vph)		1191		500				
v/c		0.00		0.02				
95% queue length		0.01		0.06				
Control Delay		8.0		12.3				
LOS		A		B				
Approach Delay				12.3				
Approach LOS				B				

HCS2000: Unsignalized Intersections Release 4.1d

TWO-WAY STOP CONTROL SUMMARY

Analyst: MA
Agency/Co.: GDOT
Date Performed: 5/22/2005
Analysis Time Period: AM Peak
Intersection: Patrick Mill Rd @ Plantation Road
Jurisdiction: Barrow County
Units: U. S. Customary
Analysis Year: Year 2005
Project ID:
East/West Street: Plantation Rd
North/South Street: Patrick Mill Road
Intersection Orientation: NS Study period (hrs): 0.25

Vehicle Volumes and Adjustments

Major Street: Approach	Northbound			Southbound		
Movement	1	2	3	4	5	6
	L	T	R	L	T	R
Volume		300	5	5	225	
Peak-Hour Factor, PHF		0.92	0.92	0.92	0.92	
Hourly Flow Rate, HFR		326	5	5	244	
Percent Heavy Vehicles		--	--	0	--	--
Median Type/Storage	Undivided			/		
RT Channelized?						
Lanes		1	0	0	1	
Configuration			TR		LT	
Upstream Signal?		No			No	

Minor Street: Approach	Westbound			Eastbound		
Movement	7	8	9	10	11	12
	L	T	R	L	T	R
Volume	20		5			
Peak Hour Factor, PHF	0.92		0.92			
Hourly Flow Rate, HFR	21		5			
Percent Heavy Vehicles	0		0			
Percent Grade (%)		0			0	
Flared Approach: Exists?/Storage			No /			/
Lanes	0		0			
Configuration		LR				

Delay, Queue Length, and Level of Service

Approach	NB	SB	Westbound			Eastbound		
Movement	1	4	7	8	9	10	11	12
Lane Config		LT		LR				
v (vph)		5		26				
C(m) (vph)		1240		510				
v/c		0.00		0.05				
95% queue length		0.01		0.16				
Control Delay		7.9		12.4				
LOS		A		B				
Approach Delay				12.4				
Approach LOS				B				

HCS2000: Unsignalized Intersections Release 4.1d

TWO-WAY STOP CONTROL SUMMARY

Analyst: MA
Agency/Co.: GDOT
Date Performed: 5/22/2005
Analysis Time Period: PM Peak
Intersection: Patrick Mill Road @ Plantation Road
Jurisdiction: Barrow County
Units: U. S. Customary
Analysis Year: Year 2005
Project ID:
East/West Street: Plantation Road
North/South Street: Patrick Mill Road
Intersection Orientation: NS Study period (hrs): 0.25

Vehicle Volumes and Adjustments

Major Street: Approach	Northbound			Southbound		
Movement	1	2	3	4	5	6
	L	T	R	L	T	R
Volume		325	20	15	305	
Peak-Hour Factor, PHF		0.92	0.92	0.92	0.92	
Hourly Flow Rate, HFR		353	21	16	331	
Percent Heavy Vehicles		--	--	0	--	--
Median Type/Storage	Undivided			/		
RT Channelized?						
Lanes		1	0	0	1	
Configuration			TR	LT		
Upstream Signal?		No			No	

Minor Street: Approach	Westbound			Eastbound		
Movement	7	8	9	10	11	12
	L	T	R	L	T	R
Volume	10		15			
Peak Hour Factor, PHF	0.92		0.92			
Hourly Flow Rate, HFR	10		16			
Percent Heavy Vehicles	0		0			
Percent Grade (%)		0			0	
Flared Approach: Exists?/Storage			No /			/
Lanes	0		0			
Configuration		LR				

Delay, Queue Length, and Level of Service

Approach	NB	SB	Westbound			Eastbound		
Movement	1	4	7	8	9	10	11	12
Lane Config		LT		LR				
v (vph)		16		26				
C(m) (vph)		1196		530				
v/c		0.01		0.05				
95% queue length		0.04		0.15				
Control Delay		8.1		12.1				
LOS		A		B				
Approach Delay				12.1				
Approach LOS				B				

HCS2000: Unsignalized Intersections Release 4.1d

ALL-WAY STOP CONTROL(AWSC) ANALYSIS

Analyst: MA
Agency/Co.: GDOT
Date Performed: 5/22/2005
Analysis Time Period: AM Peak
Intersection: Patrick Mill Rd @ Matthews School Road
Jurisdiction: Barrow County
Units: U. S. Customary
Analysis Year: Year 2005
Project ID:
East/West Street: Matthews School Rd
North/South Street: Patrick Mill Rd

Worksheet 2 - Volume Adjustments and Site Characteristics

	Eastbound			Westbound			Northbound			Southbound		
	L	T	R	L	T	R	L	T	R	L	T	R
Volume	10	60	25	30	75	45	35	260	10	20	175	20
% Thrus Left Lane												

	Eastbound		Westbound		Northbound		Southbound	
	L1	L2	L1	L2	L1	L2	L1	L2
Configuration	LTR		LTR		LTR		LTR	
PHF	0.92		0.92		0.92		0.92	
Flow Rate	102		161		330		232	
% Heavy Veh	0		0		0		0	
No. Lanes	1		1		1		1	
Opposing-Lanes	1		1		1		1	
Conflicting-lanes	1		1		1		1	
Geometry group	1		1		1		1	

Duration, T 0.25 hrs.

Worksheet 3 - Saturation Headway Adjustment Worksheet

	Eastbound		Westbound		Northbound		Southbound	
	L1	L2	L1	L2	L1	L2	L1	L2
Flow Rates:								
Total in Lane	102		161		330		232	
Left-Turn	10		32		38		21	
Right-Turn	27		48		10		21	
Prop. Left-Turns	0.1		0.2		0.1		0.1	
Prop. Right-Turns	0.3		0.3		0.0		0.1	
Prop. Heavy Vehicle	0.0		0.0		0.0		0.0	
Geometry Group	1		1		1		1	
Adjustments Exhibit 17-33:								
hLT-adj	0.2		0.2		0.2		0.2	
hRT-adj	-0.6		-0.6		-0.6		-0.6	
hHV-adj	1.7		1.7		1.7		1.7	
hadj, computed	-0.1		-0.1		0.0		-0.0	

Worksheet 4 - Departure Headway and Service Time

	Eastbound		Westbound		Northbound		Southbound	
	L1	L2	L1	L2	L1	L2	L1	L2
Flow rate	102		161		330		232	
hd, initial value	3.20	3.20	3.20	3.20	3.20	3.20	3.20	3.20
x, initial	0.09		0.14		0.29		0.21	
hd, final value	5.50		5.38		4.99		5.08	
x, final value	0.16		0.24		0.46		0.33	
Move-up time, m	2.0		2.0		2.0		2.0	
Service Time	3.5		3.4		3.0		3.1	

Worksheet 5 - Capacity and Level of Service

	Eastbound		Westbound		Northbound		Southbound	
	L1	L2	L1	L2	L1	L2	L1	L2
Flow Rate	102		161		330		232	
Service Time	3.5		3.4		3.0		3.1	
Utilization, x	0.16		0.24		0.46		0.33	
Dep. headway, hd	5.50		5.38		4.99		5.08	
Capacity	352		411		580		482	
Delay	9.51		10.08		12.12		10.54	
LOS	A		B		B		B	
Approach:								
Delay	9.51		10.08		12.12		10.54	
LOS	A		B		B		B	

Intersection Delay 10.95 Intersection LOS B

HCS2000: Unsignalized Intersections Release 4.1d

ALL-WAY STOP CONTROL(AWSC) ANALYSIS

Analyst: MA
Agency/Co.: GDOT
Date Performed: 5/22/2005
Analysis Time Period: PM Peak
Intersection: Patrick Mill Rd @ Matthews School Road
Jurisdiction: Barrow County
Units: U. S. Customary
Analysis Year: Year 2005
Project ID:
East/West Street: Matthews School Rd
North/South Street: Patrick Mill Rd

Worksheet 2 - Volume Adjustments and Site Characteristics

	Eastbound			Westbound			Northbound			Southbound		
	L	T	R	L	T	R	L	T	R	L	T	R
Volume	25	65	45	20	50	40	15	285	40	50	255	15
% Thrus Left Lane												

	Eastbound		Westbound		Northbound		Southbound	
	L1	L2	L1	L2	L1	L2	L1	L2
Configuration	LTR		LTR		LTR		LTR	
PHF	0.92		0.92		0.92		0.92	
Flow Rate	145		118		368		347	
% Heavy Veh	0		0		0		0	
No. Lanes	1		1		1		1	
Opposing-Lanes	1		1		1		1	
Conflicting-lanes	1		1		1		1	
Geometry group	1		1		1		1	

Duration, T 0.25 hrs.

Worksheet 3 - Saturation Headway Adjustment Worksheet

	Eastbound		Westbound		Northbound		Southbound	
	L1	L2	L1	L2	L1	L2	L1	L2
Flow Rates:								
Total in Lane	145		118		368		347	
Left-Turn	27		21		16		54	
Right-Turn	48		43		43		16	
Prop. Left-Turns	0.2		0.2		0.0		0.2	
Prop. Right-Turns	0.3		0.4		0.1		0.0	
Prop. Heavy Vehicle	0.0		0.0		0.0		0.0	
Geometry Group	1		1		1		1	
Adjustments Exhibit 17-33:								
hLT-adj	0.2		0.2		0.2		0.2	
hRT-adj	-0.6		-0.6		-0.6		-0.6	
hHV-adj	1.7		1.7		1.7		1.7	
hadj, computed	-0.2		-0.2		-0.1		0.0	

Worksheet 4 - Departure Headway and Service Time

	Eastbound		Westbound		Northbound		Southbound	
	L1	L2	L1	L2	L1	L2	L1	L2
Flow rate	145		118		368		347	
hd, initial value	3.20	3.20	3.20	3.20	3.20	3.20	3.20	3.20
x, initial	0.13		0.10		0.33		0.31	
hd, final value	5.87		5.91		5.18		5.27	
x, final value	0.24		0.19		0.53		0.51	
Move-up time, m	2.0		2.0		2.0		2.0	
Service Time	3.9		3.9		3.2		3.3	

Worksheet 5 - Capacity and Level of Service

	Eastbound		Westbound		Northbound		Southbound	
	L1	L2	L1	L2	L1	L2	L1	L2
Flow Rate	145		118		368		347	
Service Time	3.9		3.9		3.2		3.3	
Utilization, x	0.24		0.19		0.53		0.51	
Dep. headway, hd	5.87		5.91		5.18		5.27	
Capacity	395		368		618		597	
Delay	10.68		10.33		13.86		13.58	
LOS	B		B		B		B	
Approach:								
Delay	10.68		10.33		13.86		13.58	
LOS	B		B		B		B	

Intersection Delay 12.86 Intersection LOS B

HCS2000: Unsignalized Intersections Release 4.1d

TWO-WAY STOP CONTROL SUMMARY

Analyst: MA
Agency/Co.: GDOT
Date Performed: 5/22/2005
Analysis Time Period: AM Peak
Intersection: Patrick Mill Rd @ West Winder Ind. Parkway
Jurisdiction: Barrow County
Units: U. S. Customary
Analysis Year: Year 2005
Project ID:
East/West Street: West Winder Ind Pkwy
North/South Street: Patrick Mill Road
Intersection Orientation: NS Study period (hrs): 0.25

Vehicle Volumes and Adjustments

Major Street: Approach	Northbound			Southbound		
Movement	1	2	3	4	5	6
	L	T	R	L	T	R
Volume		265	50	5	195	
Peak-Hour Factor, PHF		0.92	0.92	0.92	0.92	
Hourly Flow Rate, HFR		288	54	5	211	
Percent Heavy Vehicles		--	--	0	--	--
Median Type/Storage	Undivided			/		
RT Channelized?						
Lanes		1	0	0	1	
Configuration			TR	LT		
Upstream Signal?		No			No	

Minor Street: Approach	Westbound			Eastbound		
Movement	7	8	9	10	11	12
	L	T	R	L	T	R
Volume	20		15			
Peak Hour Factor, PHF	0.92		0.92			
Hourly Flow Rate, HFR	21		16			
Percent Heavy Vehicles	0		0			
Percent Grade (%)		0			0	
Flared Approach: Exists?/Storage			No	/		/
Lanes	0		0			
Configuration		LR				

Delay, Queue Length, and Level of Service

Approach	NB	SB	Westbound			Eastbound		
Movement	1	4	7	8	9	10	11	12
Lane Config		LT		LR				
v (vph)		5		37				
C(m) (vph)		1228		584				
v/c		0.00		0.06				
95% queue length		0.01		0.20				
Control Delay		7.9		11.6				
LOS		A		B				
Approach Delay				11.6				
Approach LOS				B				

HCS2000: Unsignalized Intersections Release 4.1d

TWO-WAY STOP CONTROL SUMMARY

Analyst: MA
Agency/Co.: GDOT
Date Performed: 5/22/2005
Analysis Time Period: PM Peak
Intersection: Patrick Mill Rd @ West Winder Ind. Pkwy
Jurisdiction: Barrow County
Units: U. S. Customary
Analysis Year: Year 2005
Project ID:
East/West Street: West Winder Ind Pkwy
North/South Street: Patrick Mill Road
Intersection Orientation: NS Study period (hrs): 0.25

Vehicle Volumes and Adjustments

Major Street: Approach	Northbound			Southbound		
Movement	1	2	3	4	5	6
	L	T	R	L	T	R
Volume		340	10	20	225	
Peak-Hour Factor, PHF		0.92	0.92	0.92	0.92	
Hourly Flow Rate, HFR		369	10	21	244	
Percent Heavy Vehicles		--	--	0	--	--
Median Type/Storage	Undivided			/		
RT Channelized?						
Lanes		1	0	0	1	
Configuration			TR	LT		
Upstream Signal?		No			No	

Minor Street: Approach	Westbound			Eastbound		
Movement	7	8	9	10	11	12
	L	T	R	L	T	R
Volume	95		30			
Peak Hour Factor, PHF	0.92		0.92			
Hourly Flow Rate, HFR	103		32			
Percent Heavy Vehicles	0		0			
Percent Grade (%)		0			0	
Flared Approach: Exists?/Storage			No	/		/
Lanes	0	0				
Configuration		LR				

Delay, Queue Length, and Level of Service

Approach	NB	SB	Westbound			Eastbound		
Movement	1	4	7	8	9	10	11	12
Lane Config		LT		LR				
v (vph)		21		135				
C(m) (vph)		1191		464				
v/c		0.02		0.29				
95% queue length		0.05		1.20				
Control Delay		8.1		15.9				
LOS		A		C				
Approach Delay				15.9				
Approach LOS				C				

HCS2000: Unsignalized Intersections Release 4.1d

TWO-WAY STOP CONTROL SUMMARY

Analyst: MA
Agency/Co.: GDOT
Date Performed: 5/22/2005
Analysis Time Period: AM Peak
Intersection: Patrick Mill Rd @ Atlanta Hwy/ SR 8
Jurisdiction: Barrow County
Units: U. S. Customary
Analysis Year: Year 2005
Project ID:
East/West Street: Atlanta Hwy / SR 8
North/South Street: Patrick Mill Road
Intersection Orientation: EW Study period (hrs): 0.25

Vehicle Volumes and Adjustments

Major Street: Approach	Eastbound			Westbound		
Movement	1	2	3	4	5	6
	L	T	R	L	T	R
Volume		305	15	185	265	
Peak-Hour Factor, PHF		0.92	0.92	0.92	0.92	
Hourly Flow Rate, HFR		331	16	201	288	
Percent Heavy Vehicles		--	--	0	--	--
Median Type/Storage	Undivided			/		
RT Channelized?						
Lanes		1	0	0	1	
Configuration			TR	LT		
Upstream Signal?		No			No	

Minor Street: Approach	Northbound			Southbound		
Movement	7	8	9	10	11	12
	L	T	R	L	T	R
Volume	15		265			
Peak Hour Factor, PHF	0.92		0.92			
Hourly Flow Rate, HFR	16		288			
Percent Heavy Vehicles	0		0			
Percent Grade (%)		0			0	
Flared Approach: Exists?/Storage			/			/
Lanes		1	1			
Configuration		L	R			

Delay, Queue Length, and Level of Service

Approach	EB	WB	Northbound			Southbound		
Movement	1	4	7	8	9	10	11	12
Lane Config		LT	L		R			
v (vph)		201	16		288			
C(m) (vph)		1223	218		708			
v/c		0.16	0.07		0.41			
95% queue length		0.59	0.24		1.98			
Control Delay		8.5	22.8		13.5			
LOS		A	C		B			
Approach Delay				14.0				
Approach LOS				B				

HCS2000: Unsignalized Intersections Release 4.1d

TWO-WAY STOP CONTROL SUMMARY

Analyst: MA
Agency/Co.: GDOT
Date Performed: 5/22/2005
Analysis Time Period: PM Peak
Intersection: Patrick Mill Rd @ Atlanta Hwy/ SR 8
Jurisdiction: Barrow County
Units: U. S. Customary
Analysis Year: Year 2005
Project ID:
East/West Street: Atlanta Hwy/ SR 8
North/South Street: Patrick Mill Road
Intersection Orientation: EW Study period (hrs): 0.25

Vehicle Volumes and Adjustments

Major Street: Approach	Eastbound			Westbound		
Movement	1	2	3	4	5	6
	L	T	R	L	T	R
Volume		530	20	225	410	
Peak-Hour Factor, PHF		0.92	0.92	0.92	0.92	
Hourly Flow Rate, HFR		576	21	244	445	
Percent Heavy Vehicles		--	--	0	--	--
Median Type/Storage	Undivided			/		
RT Channelized?						
Lanes		1	0	0	1	
Configuration			TR	LT		
Upstream Signal?		No			No	

Minor Street: Approach	Northbound			Southbound		
Movement	7	8	9	10	11	12
	L	T	R	L	T	R
Volume	15		355			
Peak Hour Factor, PHF	0.92		0.92			
Hourly Flow Rate, HFR	16		385			
Percent Heavy Vehicles	0		0			
Percent Grade (%)		0			0	
Flared Approach: Exists?/Storage			/			/
Lanes	1		1			
Configuration	L		R			

Delay, Queue Length, and Level of Service

Approach	EB	WB	Northbound			Southbound		
Movement	1	4	7	8	9	10	11	12
Lane Config		LT	L		R			
v (vph)		244	16		385			
C(m) (vph)		989	99		514			
v/c		0.25	0.16		0.75			
95% queue length		0.97	0.55		6.41			
Control Delay		9.8	48.2		30.0			
LOS		A	E		D			
Approach Delay				30.8				
Approach LOS				D				

HCS2000: Unsignalized Intersections Release 4.1d

TWO-WAY STOP CONTROL SUMMARY

Analyst: MA
Agency/Co.: GDOT
Date Performed: 5/22/2005
Analysis Time Period: AM Peak
Intersection: Bankhead Hwy @ Pearl Pentecost Road
Jurisdiction: Barrow County
Units: U. S. Customary
Analysis Year: Year 2005
Project ID:
East/West Street: Bankhead Hwy
North/South Street: Pearl Pentecost Road
Intersection Orientation: EW Study period (hrs): 0.25

Vehicle Volumes and Adjustments

Major Street: Approach	Eastbound			Westbound		
Movement	1	2	3	4	5	6
	L	T	R	L	T	R
Volume	65	65			105	25
Peak-Hour Factor, PHF	0.92	0.92			0.92	0.92
Hourly Flow Rate, HFR	70	70			114	27
Percent Heavy Vehicles	0	--	--		--	--
Median Type/Storage	Undivided			/		
RT Channelized?						
Lanes	0	1			1	0
Configuration		LT				TR
Upstream Signal?		No			No	

Minor Street: Approach	Northbound			Southbound		
Movement	7	8	9	10	11	12
	L	T	R	L	T	R
Volume				25		90
Peak Hour Factor, PHF				0.92		0.92
Hourly Flow Rate, HFR				27		97
Percent Heavy Vehicles				0		0
Percent Grade (%)		0			0	
Flared Approach: Exists?/Storage			/		No	/
Lanes				0		0
Configuration					LR	

Delay, Queue Length, and Level of Service

Approach	EB	WB	Northbound			Southbound		
Movement	1	4	7	8	9	10	11	12
Lane Config	LT						LR	
v (vph)	70						124	
C(m) (vph)	1455						841	
v/c	0.05						0.15	
95% queue length	0.15						0.52	
Control Delay	7.6						10.0+	
LOS	A						B	
Approach Delay							10.0+	
Approach LOS							B	

HCS2000: Unsignalized Intersections Release 4.1d

TWO-WAY STOP CONTROL SUMMARY

Analyst: MA
Agency/Co.: GDOT
Date Performed: 5/22/2005
Analysis Time Period: PM Peak
Intersection: Bankhead Hwy @ Pearl Pentecost Road
Jurisdiction: Barrow County
Units: U. S. Customary
Analysis Year: Year 2005
Project ID:
East/West Street: Bankhead Hwy
North/South Street: Pearl Pentecost Road
Intersection Orientation: EW Study period (hrs): 0.25

Vehicle Volumes and Adjustments

Major Street: Approach	Eastbound			Westbound		
Movement	1	2	3	4	5	6
	L	T	R	L	T	R
Volume	135	110			130	25
Peak-Hour Factor, PHF	0.92	0.92			0.92	0.92
Hourly Flow Rate, HFR	146	119			141	27
Percent Heavy Vehicles	0	--	--		--	--
Median Type/Storage	Undivided			/		
RT Channelized?						
Lanes	0	1			1	0
Configuration		LT				TR
Upstream Signal?		No			No	

Minor Street: Approach	Northbound			Southbound		
Movement	7	8	9	10	11	12
	L	T	R	L	T	R
Volume				35		90
Peak Hour Factor, PHF				0.92		0.92
Hourly Flow Rate, HFR				38		97
Percent Heavy Vehicles				0		0
Percent Grade (%)		0			0	
Flared Approach: Exists?/Storage			/		No	/
Lanes				0	0	
Configuration					LR	

Delay, Queue Length, and Level of Service

Approach	EB	WB	Northbound			Southbound		
Movement	1	4	7	8	9	10	11	12
Lane Config	LT						LR	
v (vph)	146						135	
C(m) (vph)	1422						694	
v/c	0.10						0.19	
95% queue length	0.34						0.72	
Control Delay	7.8						11.4	
LOS	A						B	
Approach Delay							11.4	
Approach LOS							B	

HCS2000: Signalized Intersections Release 4.1d

Analyst: MA
Agency: GDOT
Date: 5/22/2005
Period: AM Peak
Project ID:
E/W St: Rockwell Church Road/Carl Cedar Hill Road

Inter.: SR 211 at Rockwell Church Road/Carl Cedar Hill Road
Area Type: All other areas
Jurisd: Barrow County
Year : Year 2005

N/S St: SR 211

SIGNALIZED INTERSECTION SUMMARY

	Eastbound			Westbound			Northbound			Southbound		
	L	T	R	L	T	R	L	T	R	L	T	R
No. Lanes	1	1	1	1	1	1	1	1	1	1	1	1
LGConfig	L	T	R	L	T	R	L	T	R	L	T	R
Volume	90	105	65	45	165	255	30	330	35	145	330	65
Lane Width	12.0	12.0	12.0	12.0	12.0	12.0	12.0	12.0	12.0	12.0	12.0	12.0
RTOR Vol			0			0			0			0

Duration 0.25 Area Type: All other areas

Signal Operations

Phase Combination		1	2	3	4			5	6	7	8
EB	Left	P	P			NB	Left	P	P		
	Thru		P				Thru		P		
	Right		P				Right		P		
	Peds						Peds				
WB	Left	P	P			SB	Left	P	P		
	Thru		P				Thru		P		
	Right		P				Right		P		
	Peds						Peds				
NB	Right	P				EB	Right	P			
SB	Right	P				WB	Right	P			
Green		8.0	24.0					8.0	40.0		
Yellow		4.0	4.0					4.0	4.0		
All Red		1.0	1.0					1.0	1.0		

Cycle Length: 100.0 secs

Intersection Performance Summary

Appr/ Lane Grp	Lane Group Capacity	Adj Sat Flow Rate (s)	Ratios v/c	Ratios g/C	Lane Group Delay	Lane Group LOS	Approach Delay	Approach LOS
Eastbound								
L	396	1805	0.25	0.37	22.9	C		
T	456	1900	0.25	0.24	32.0	C	26.1	C
R	598	1615	0.12	0.37	21.2	C		
Westbound								
L	454	1805	0.11	0.37	21.0	C		
T	456	1900	0.39	0.24	34.4	C	28.8	C
R	598	1615	0.46	0.37	26.5	C		
Northbound								
L	456	1805	0.07	0.53	12.7	B		
T	760	1900	0.47	0.40	24.3	C	22.3	C
R	856	1615	0.04	0.53	11.4	B		
Southbound								
L	456	1805	0.35	0.53	15.5	B		
T	760	1900	0.47	0.40	24.3	C	20.4	C
R	856	1615	0.08	0.53	11.7	B		

Intersection Delay = 24.1 (sec/veh) Intersection LOS = C

HCS2000: Signalized Intersections Release 4.1d

Analyst: MA
Agency: GDOT
Date: 5/22/2005
Period: PM Peak
Project ID:
E/W St: Rockwell Church Road/Carl Cedar Hill Road

Inter.: SR 211 at Rockwell Church Road/Carl Cedar Hill Road
Area Type: All other areas
Jurisd: Barrow County
Year : Year 2005

N/S St: SR 211

SIGNALIZED INTERSECTION SUMMARY

	Eastbound			Westbound			Northbound			Southbound		
	L	T	R	L	T	R	L	T	R	L	T	R
No. Lanes	1	1	1	1	1	1	1	1	1	1	1	1
LGConfig	L	T	R	L	T	R	L	T	R	L	T	R
Volume	95	180	45	25	100	125	40	305	20	270	435	100
Lane Width	12.0	12.0	12.0	12.0	12.0	12.0	12.0	12.0	12.0	12.0	12.0	12.0
RTOR Vol			0			0			0			0

Duration 0.25 Area Type: All other areas

Signal Operations

Phase Combination		1	2	3	4			5	6	7	8
EB	Left	P	P			NB	Left		P		
	Thru		P				Thru		P		
	Right		P				Right		P		
	Peds						Peds				
WB	Left	P	P			SB	Left	P	P		
	Thru		P				Thru	P	P		
	Right		P				Right	P	P		
	Peds						Peds				
NB	Right	P				EB	Right				
SB	Right	P				WB	Right	P			
Green		8.0	25.0					12.0	35.0		
Yellow		4.0	4.0					4.0	4.0		
All Red		1.0	1.0					1.0	1.0		

Cycle Length: 100.0 secs

Intersection Performance Summary

Appr/ Lane Grp	Lane Group Capacity	Adj Sat Flow Rate (s)	Ratios v/c	Ratios g/C	Lane Group Delay	Lane Group LOS	Approach Delay	Approach LOS
Eastbound								
L	470	1805	0.22	0.38	21.6	C		
T	475	1900	0.41	0.25	34.0	C	29.7	C
R	404	1615	0.12	0.25	29.6	C		
Westbound								
L	395	1805	0.07	0.38	20.3	C		
T	475	1900	0.23	0.25	31.0	C	23.9	C
R	678	1615	0.20	0.42	19.0	B		
Northbound								
L	327	935	0.13	0.35	23.0	C		
T	665	1900	0.50	0.35	28.3	C	26.9	C
R	775	1615	0.03	0.48	13.8	B		
Southbound								
L	486	1805	0.60	0.52	20.7	C		
T	988	1900	0.48	0.52	17.0	B	17.0	B
R	1050	1615	0.10	0.65	6.8	A		

Intersection Delay = 22.4 (sec/veh) Intersection LOS = C

HCS2000: Signalized Intersections Release 4.1d

Analyst: MA
Agency: GDOT
Date: 5/22/2005
Period: AM Peak
Project ID:
E/W St: SR 316

Inter.: Patrick Mill Rd at SR 316
Area Type: All other areas
Jurisd: Barrow County
Year : Year 2009

N/S St: Patrick Mill Rd

SIGNALIZED INTERSECTION SUMMARY

	Eastbound			Westbound			Northbound			Southbound		
	L	T	R	L	T	R	L	T	R	L	T	R
No. Lanes	2	2	1	1	2	1	1	2	1	1	2	1
LGConfig	L	T	R	L	T	R	L	T	R	L	T	R
Volume	165	920	260	80	1170	60	280	350	125	70	360	330
Lane Width	12.0	12.0	12.0	12.0	12.0	12.0	12.0	12.0	12.0	12.0	12.0	12.0
RTOR Vol			0			0			0			0

Duration 0.25 Area Type: All other areas

Signal Operations

Phase Combination		1	2	3	4			5	6	7	8
EB	Left	P				NB	Left	P	P		
	Thru		P				Thru		P		
	Right		P				Right		P		
	Peds						Peds				
WB	Left	P	P			SB	Left	P	P		
	Thru		P				Thru		P		
	Right		P				Right		P		
	Peds						Peds				
NB	Right	P				EB	Right	P			
SB	Right	P				WB	Right	P			
Green		12.2	54.2					22.1	21.5		
Yellow		4.0	4.0					4.0	4.0		
All Red		1.0	1.0					1.0	1.0		

Cycle Length: 130.0 secs

Intersection Performance Summary

Appr/ Lane Grp	Lane Group Capacity	Adj Sat Flow Rate (s)	Ratios v/c	Ratios g/C	Lane Group Delay	Lane Group LOS	Approach Delay	Approach LOS
Eastbound								
L	329	3502	0.54	0.09	62.6	E		
T	1505	3610	0.66	0.42	32.9	C	32.4	C
R	1010	1615	0.28	0.63	11.8	B		
Westbound								
L	286	1805	0.30	0.55	21.1	C		
T	1505	3610	0.85	0.42	40.1	D	37.6	D
R	1010	1615	0.06	0.63	9.6	A		
Northbound								
L	402	1805	0.76	0.37	44.2	D		
T	597	3610	0.64	0.17	55.7	E	48.3	D
R	481	1615	0.28	0.30	36.5	D		
Southbound								
L	406	1805	0.19	0.37	28.4	C		
T	597	3610	0.65	0.17	56.3	E	51.6	D
R	481	1615	0.75	0.30	51.3	D		

Intersection Delay = 40.4 (sec/veh) Intersection LOS = D

HCS2000: Signalized Intersections Release 4.1d

Analyst: MA
Agency: GDOT
Date: 5/22/2005
Period: PM Peak
Project ID:
E/W St: SR 316

Inter.: Patrick Mill Rd at SR 316
Area Type: All other areas
Jurisd: Barrow County
Year : Year 2009

N/S St: Patrick Mill Rd

SIGNALIZED INTERSECTION SUMMARY

	Eastbound			Westbound			Northbound			Southbound		
	L	T	R	L	T	R	L	T	R	L	T	R
No. Lanes	2	2	1	1	2	1	1	2	1	1	2	1
LGConfig	L	T	R	L	T	R	L	T	R	L	T	R
Volume	315	1380	270	120	1100	60	135	405	100	120	330	195
Lane Width	12.0	12.0	12.0	12.0	12.0	12.0	12.0	12.0	12.0	12.0	12.0	12.0
RTOR Vol			0			0			0			0

Duration 0.25 Area Type: All other areas

Signal Operations

Phase Combination		1	2	3	4			5	6	7	8
EB	Left	P				NB	Left	P	P		
	Thru		P				Thru		P		
	Right		P				Right		P		
	Peds						Peds				
WB	Left	P	P			SB	Left	P	P		
	Thru		P				Thru		P		
	Right		P				Right		P		
	Peds						Peds				
NB	Right	P				EB	Right	P			
SB	Right	P				WB	Right	P			
Green		20.1	75.4					9.9	24.6		
Yellow		4.0	4.0					4.0	4.0		
All Red		1.0	1.0					1.0	1.0		

Cycle Length: 150.0 secs

Intersection Performance Summary

Appr/ Lane Grp	Lane Group Capacity	Adj Sat Flow Rate (s)	Ratios v/c	Ratios g/C	Lane Group Delay	Lane Group LOS	Approach Delay	Approach LOS
Eastbound								
L	469	3502	0.73	0.13	71.9	E		
T	1815	3610	0.83	0.50	36.2	D	39.1	D
R	972	1615	0.30	0.60	15.3	B		
Westbound								
L	293	1805	0.44	0.67	38.6	D		
T	1815	3610	0.66	0.50	29.6	C	29.7	C
R	972	1615	0.07	0.60	12.5	B		
Northbound								
L	220	1805	0.67	0.26	60.1	E		
T	592	3610	0.74	0.16	67.9	E	61.4	E
R	535	1615	0.20	0.33	36.8	D		
Southbound								
L	189	1805	0.69	0.26	63.7	E		
T	592	3610	0.61	0.16	62.8	E	56.3	E
R	535	1615	0.40	0.33	40.8	D		

Intersection Delay = 42.0 (sec/veh) Intersection LOS = D

HCS+: Signalized Intersections Release 5.1

Analyst: MA
Agency: GDOT
Date: 5/22/2005
Period: AM Peak
Project ID:
E/W St: Tom Miller Rd

Inter.: Patrick Mill Rd at Tom Miller
Area Type: All other areas
Jurisd: Barrow County
Year : Year 2029

N/S St: Patrick Mill Rd

SIGNALIZED INTERSECTION SUMMARY

	Eastbound			Westbound			Northbound			Southbound		
	L	T	R	L	T	R	L	T	R	L	T	R
No. Lanes	1	1	1	1	1	1	1	2	1	2	2	1
LGConfig	L	T	R	L	T	R	L	T	R	L	T	R
Volume	75	25	15	45	5	780	25	450	15	700	465	95
Lane Width	12.0	12.0	12.0	12.0	12.0	12.0	12.0	12.0	12.0	12.0	12.0	12.0
RTOR Vol			0			0			0			0

Duration 0.25 Area Type: All other areas

Signal Operations

Phase Combination		1	2	3	4			5	6	7	8
EB	Left	P	P			NB	Left		P		
	Thru		P				Thru		P		
	Right		P				Right		P		
	Peds						Peds				
WB	Left	P	P			SB	Left	P			
	Thru		P				Thru	P	P		
	Right		P				Right	P	P		
	Peds						Peds				
NB	Right	P				EB	Right				
SB	Right	P				WB	Right	P			
Green		6.0	25.0					24.0	25.0		
Yellow		4.0	4.0					4.0	4.0		
All Red		1.0	1.0					1.0	1.0		

Cycle Length: 100.0 secs

Intersection Performance Summary

Appr/ Lane Grp	Lane Group Capacity	Adj Sat Flow Rate (s)	Ratios v/c	Ratios g/C	Lane Group Delay	Lane Group LOS	Approach Delay	Approach LOS
Eastbound								
L	467	1805	0.18	0.36	22.4	C		
T	475	1900	0.06	0.25	28.8	C	24.6	C
R	404	1615	0.04	0.25	28.6	C		
Westbound								
L	459	1805	0.11	0.36	21.6	C		
T	475	1900	0.01	0.25	28.2	C	45.3	D
R	872	1615	0.97	0.54	46.8	D		
Northbound								
L	222	887	0.12	0.25	30.1	C		
T	905	3618	0.54	0.25	34.8	C	34.2	C
R	581	1615	0.03	0.36	20.8	C		
Southbound								
L	841	3505	0.90	0.24	52.0	D		
T	1954	3618	0.26	0.54	12.6	B	34.0	C
R	1050	1615	0.10	0.65	6.7	A		

Intersection Delay = 37.1 (sec/veh) Intersection LOS = D

HCS+: Signalized Intersections Release 5.1

Analyst: MA
Agency: GDOT
Date: 5/22/2005
Period: PM Peak
Project ID:
E/W St: Tom Miller Rd

Inter.: Patrick Mill Rd at Tom Miller
Area Type: All other areas
Jurisd: Barrow County
Year : Year 2029

N/S St: Patrick Mill Rd

SIGNALIZED INTERSECTION SUMMARY

	Eastbound			Westbound			Northbound			Southbound		
	L	T	R	L	T	R	L	T	R	L	T	R
No. Lanes	1	1	1	1	1	1	1	2	1	2	2	1
LGConfig	L	T	R	L	T	R	L	T	R	L	T	R
Volume	115	40	25	15	35	440	20	615	50	495	660	110
Lane Width	12.0	12.0	12.0	12.0	12.0	12.0	12.0	12.0	12.0	12.0	12.0	12.0
RTOR Vol			0			0			0			0

Duration 0.25 Area Type: All other areas

Signal Operations

Phase Combination		1	2	3	4			5	6	7	8
EB	Left	P	P			NB	Left		P		
	Thru		P				Thru		P		
	Right		P				Right		P		
	Peds						Peds				
WB	Left	P	P			SB	Left	P			
	Thru		P				Thru	P	P		
	Right		P				Right	P	P		
	Peds						Peds				
NB	Right	P				EB	Right				
SB	Right	P				WB	Right	P			
Green		6.0	25.0					24.0	25.0		
Yellow		4.0	4.0					4.0	4.0		
All Red		1.0	1.0					1.0	1.0		

Cycle Length: 100.0 secs

Intersection Performance Summary

Appr/ Lane Grp	Lane Group Capacity	Adj Sat Flow Rate (s)	Ratios v/c	Ratios g/C	Lane Group Delay	Lane Group LOS	Approach Delay	Approach LOS
Eastbound								
L	456	1805	0.27	0.36	23.6	C		
T	475	1900	0.09	0.25	29.2	C	25.6	C
R	404	1615	0.07	0.25	28.9	C		
Westbound								
L	454	1805	0.04	0.36	20.9	C		
T	475	1900	0.08	0.25	29.0	C	18.4	B
R	872	1615	0.55	0.54	17.5	B		
Northbound								
L	180	721	0.12	0.25	30.4	C		
T	905	3618	0.74	0.25	39.9	D	38.2	D
R	581	1615	0.09	0.36	21.5	C		
Southbound								
L	841	3505	0.64	0.24	37.8	D		
T	1954	3618	0.37	0.54	13.7	B	22.6	C
R	1050	1615	0.11	0.65	6.8	A		

Intersection Delay = 26.1 (sec/veh) Intersection LOS = C

HCS+: Signalized Intersections Release 5.1

Analyst: MA
Agency: GDOT
Date: 5/22/2005
Period: AM Peak
Project ID:
E/W St: SR 316 Eastbound Ramps

Inter.: West Winder Bypass at SR 316 EB
Area Type: All other areas
Jurisd: Barrow County
Year : Year 2009

N/S St: West Winder Bypass

SIGNALIZED INTERSECTION SUMMARY

	Eastbound			Westbound			Northbound			Southbound		
	L	T	R	L	T	R	L	T	R	L	T	R
No. Lanes	2	0	1	0	0	0	0	2	1	1	2	0
LGConfig	L		LR	R				T	R	L	T	
Volume	270			435				1050	210	115	735	
Lane Width	12.0	12.0		12.0				12.0	12.0	12.0	12.0	
RTOR Vol				0					0			

Duration 0.25 Area Type: All other areas

Signal Operations

Phase Combination		1	2	3	4			5	6	7	8
EB	Left	P				NB	Left				
	Thru						Thru		P		
	Right	P					Right		P		
	Peds						Peds				
WB	Left					SB	Left	P	P		
	Thru						Thru	P	P		
	Right						Right	P			
	Peds						Peds				
NB	Right					EB	Right				
SB	Right					WB	Right				
Green		30.0						15.0	30.0		
Yellow		4.0						4.0	4.0		
All Red		1.0						1.0	1.0		

Cycle Length: 90.0 secs

Intersection Performance Summary

Appr/ Lane Grp	Lane Group Capacity	Adj Sat Flow Rate (s)	Ratios v/c	Ratios g/C	Lane Group Delay	Lane Group LOS	Approach Delay	Approach LOS
Eastbound								
L	1168	3505	0.25	0.33	22.3	C		
LR	633	1900	0.00	0.33	20.0	B	37.3	D
R	538	1615	0.88	0.33	46.5	D		
Westbound								
Northbound								
T	1206	3618	0.95	0.33	45.1	D	41.8	D
R	538	1615	0.42	0.33	25.7	C		
Southbound								
L	385	1805	0.32	0.56	17.2	B		
T	2010	3618	0.40	0.56	12.0	B	12.7	B

Intersection Delay = 31.9 (sec/veh) Intersection LOS = C

HCS+: Signalized Intersections Release 5.1

Analyst: MA
Agency: GDOT
Date: 5/22/2005
Period: PM Peak
Project ID:
E/W St: SR 316 Eastbound Ramps

Inter.: West Winder Bypass at SR 316 EB
Area Type: All other areas
Jurisd: Barrow County
Year : Year 2009

N/S St: West Winder Bypass

SIGNALIZED INTERSECTION SUMMARY

	Eastbound			Westbound			Northbound			Southbound		
	L	T	R	L	T	R	L	T	R	L	T	R
No. Lanes	2	0	1	0	0	0	0	2	1	1	2	0
LGConfig	L	LR	R					T	R	L	T	
Volume	525		450					900	170	195	745	
Lane Width	12.0	12.0	12.0					12.0	12.0	12.0	12.0	
RTOR Vol			0						0			

Duration 0.25 Area Type: All other areas

Signal Operations

Phase Combination	1	2	3	4			5	6	7	8
EB Left	P				NB	Left				
Thru						Thru		P		
Right	P					Right		P		
Peds						Peds				
WB Left					SB	Left	P	P		
Thru						Thru	P	P		
Right						Right	P			
Peds						Peds				
NB Right					EB	Right				
SB Right					WB	Right				
Green	30.0						15.0	30.0		
Yellow	4.0						4.0	4.0		
All Red	1.0						1.0	1.0		

Cycle Length: 90.0 secs

Intersection Performance Summary

Appr/ Lane Grp	Lane Group Capacity	Adj Sat Flow Rate (s)	Ratios v/c	Ratios g/C	Lane Group Delay	Lane Group LOS	Approach Delay	Approach LOS
Eastbound								
L	1168	3505	0.49	0.33	25.4	C		
LR	633	1900	0.00	0.33	20.0	B	37.0	D
R	538	1615	0.91	0.33	50.5	D		
Westbound								
Northbound								
T	1206	3618	0.81	0.33	33.4	C	31.9	C
R	538	1615	0.34	0.33	24.3	C		
Southbound								
L	385	1805	0.55	0.56	20.3	C		
T	2010	3618	0.40	0.56	12.1	B	13.8	B

Intersection Delay = 27.9 (sec/veh) Intersection LOS = C

HCS+: Signalized Intersections Release 5.1

Analyst: MA
Agency: GDOT
Date: 5/22/2005
Period: AM Peak
Project ID:
E/W St: SR 316 Westbound Ramps

Inter.: West Winder Bypass at SR 316 WB
Area Type: All other areas
Jurisd: Barrow County
Year : Year 2009

N/S St: West Winder Bypass

SIGNALIZED INTERSECTION SUMMARY

	Eastbound			Westbound			Northbound			Southbound		
	L	T	R	L	T	R	L	T	R	L	T	R
No. Lanes	0	0	0	1	0	1	1	2	0	0	2	1
LGConfig				L		R	L	T			T	R
Volume				135		100	465	855			715	550
Lane Width				12.0		12.0	12.0	12.0			12.0	12.0
RTOR Vol						0						0

Duration 0.25 Area Type: All other areas

Signal Operations

Phase Combination		1	2	3	4			5	6	7	8
EB	Left					NB	Left	P	P		
	Thru						Thru	P	P		
	Right						Right				
	Peds						Peds				
WB	Left	P				SB	Left				
	Thru						Thru		P		
	Right	P					Right		P		
	Peds						Peds				
NB	Right					EB	Right				
SB	Right					WB	Right				
Green		15.0						25.0	35.0		
Yellow		4.0						4.0	4.0		
All Red		1.0						1.0	1.0		

Cycle Length: 90.0 secs

Intersection Performance Summary

Appr/ Lane Grp	Lane Group Capacity	Adj Sat Flow Rate (s)	Ratios v/c	Ratios g/C	Lane Group Delay	Lane Group LOS	Approach Delay	Approach LOS
Eastbound								
Westbound								
L	301	1805	0.49	0.17	39.6	D		
							38.9	D
R	269	1615	0.41	0.17	38.0	D		
Northbound								
L	681	1805	0.74	0.72	19.7	B		
T	2613	3618	0.36	0.72	5.1	A	10.2	B
Southbound								
T	1407	3618	0.55	0.39	23.0	C	35.9	D
R	628	1615	0.95	0.39	52.6	D		

Intersection Delay = 24.1 (sec/veh) Intersection LOS = C

HCS+: Signalized Intersections Release 5.1

Analyst: MA
Agency: GDOT
Date: 5/22/2005
Period: PM Peak
Project ID:
E/W St: SR 316 Westbound Ramps

Inter.: West Winder Bypass at SR 316 WB
Area Type: All other areas
Jurisd: Barrow County
Year : Year 2009

N/S St: West Winder Bypass

SIGNALIZED INTERSECTION SUMMARY

	Eastbound			Westbound			Northbound			Southbound		
	L	T	R	L	T	R	L	T	R	L	T	R
No. Lanes	0	0	0	1	0	1	1	2	0	0	2	1
LGConfig				L		R	L	T			T	R
Volume				195		100	225	1200			745	320
Lane Width				12.0		12.0	12.0	12.0			12.0	12.0
RTOR Vol						0						0

Duration 0.25 Area Type: All other areas

Signal Operations

Phase Combination	1	2	3	4			5	6	7	8
EB Left					NB	Left	P	P		
Thru						Thru	P	P		
Right						Right				
Peds						Peds				
WB Left	P				SB	Left				
Thru						Thru		P		
Right	P					Right		P		
Peds						Peds				
NB Right					EB	Right				
SB Right					WB	Right				
Green	15.0						25.0	35.0		
Yellow	4.0						4.0	4.0		
All Red	1.0						1.0	1.0		

Cycle Length: 90.0 secs

Intersection Performance Summary

Appr/ Lane Grp	Lane Group Capacity	Adj Sat Flow Rate (s)	Ratios v/c	Ratios g/C	Lane Group Delay	Lane Group LOS	Approach Delay	Approach LOS
Eastbound								
Westbound								
L	301	1805	0.70	0.17	48.4	D		
							44.9	D
R	269	1615	0.41	0.17	38.0	D		
Northbound								
L	669	1805	0.37	0.72	8.1	A		
T	2613	3618	0.50	0.72	6.1	A	6.4	A
Southbound								
T	1407	3618	0.58	0.39	23.4	C	23.8	C
R	628	1615	0.55	0.39	24.9	C		

Intersection Delay = 17.2 (sec/veh) Intersection LOS = B

HCS2000: Signalized Intersections Release 4.1d

Analyst: MA

Agency: GDOT
Date: 5/22/2005
Period: AM Peak
Project ID:
E/W St: Bill Rutledge Rd

Inter.: West Winder Bypass Rd at
Bill Rutledge Rd/Fred Kilcrease Rd
Area Type: All other areas
Jurisd: Barrow County
Year : Year 2029

N/S St: West Winder Bypass

SIGNALIZED INTERSECTION SUMMARY

	Eastbound			Westbound			Northbound			Southbound		
	L	T	R	L	T	R	L	T	R	L	T	R
No. Lanes	1	1	1	1	1	1	1	2	1	1	2	1
LGConfig	L	T	R	L	T	R	L	T	R	L	T	R
Volume	45	95	90	195	30	15	30	670	255	15	980	225
Lane Width	12.0	12.0	12.0	12.0	12.0	12.0	12.0	12.0	12.0	12.0	12.0	12.0
RTOR Vol			0			0			0			0

Duration 0.25 Area Type: All other areas

Signal Operations

Phase Combination		1	2	3	4			5	6	7	8
EB	Left	P	P			NB	Left	P	P		
	Thru		P				Thru		P		
	Right		P				Right		P		
	Peds						Peds				
WB	Left	P	P			SB	Left	P	P		
	Thru		P				Thru		P		
	Right		P				Right		P		
	Peds						Peds				
NB	Right	P				EB	Right	P			
SB	Right	P				WB	Right	P			
Green		5.4	21.8					5.0	37.8		
Yellow		4.0	4.0					4.0	4.0		
All Red		1.0	1.0					1.0	1.0		

Cycle Length: 90.0 secs

Intersection Performance Summary

Appr/ Lane Grp	Lane Group Capacity	Adj Sat Flow Rate (s)	Ratios v/c	Ratios g/C	Lane Group Delay	Lane Group LOS	Approach Delay	Approach LOS
Eastbound								
L	447	1805	0.11	0.36	19.7	B		
T	460	1900	0.22	0.24	28.4	C	23.7	C
R	571	1615	0.17	0.35	20.7	C		
Westbound								
L	426	1805	0.50	0.36	27.7	C		
T	460	1900	0.07	0.24	26.6	C	27.0	C
R	571	1615	0.03	0.35	19.1	B		
Northbound								
L	209	1805	0.16	0.53	15.0	B		
T	1516	3610	0.48	0.42	20.1	C	17.9	B
R	865	1615	0.32	0.54	12.7	B		
Southbound								
L	327	1805	0.05	0.53	11.4	B		
T	1516	3610	0.70	0.42	24.2	C	21.9	C
R	865	1615	0.28	0.54	12.3	B		

Intersection Delay = 21.1 (sec/veh) Intersection LOS = C

HCS2000: Signalized Intersections Release 4.1d

Analyst: MA
Agency: GDOT
Date: 5/22/2005
Period: PM Peak
Project ID:
E/W St: Bill Rutledge Rd

Inter.: West Winder Bypass Rd at Bill Rutledge Rd/Fred Kilcreàse Rd
Area Type: All other areas
Jurisd: Barrow County
Year : Year 2029

N/S St: West Winder Bypass

SIGNALIZED INTERSECTION SUMMARY

	Eastbound			Westbound			Northbound			Southbound		
	L	T	R	L	T	R	L	T	R	L	T	R
No. Lanes	1	1	1	1	1	1	1	2	1	1	2	1
LGConfig	L	T	R	L	T	R	L	T	R	L	T	R
Volume	160	105	30	120	125	20	15	1050	235	10	915	45
Lane Width	12.0	12.0	12.0	12.0	12.0	12.0	12.0	12.0	12.0	12.0	12.0	12.0
RTOR Vol			0			0			0			0

Duration 0.25 Area Type: All other areas

Signal Operations

Phase Combination		1	2	3	4			5	6	7	8
EB	Left	P	P			NB	Left	P	P		
	Thru		P				Thru		P		
	Right		P				Right		P		
	Peds						Peds				
WB	Left	P	P			SB	Left	P	P		
	Thru		P				Thru		P		
	Right		P				Right		P		
	Peds						Peds				
NB	Right	P				EB	Right	P			
SB	Right	P				WB	Right	P			
Green		7.7	22.4					12.1	47.8		
Yellow		4.0	4.0					4.0	4.0		
All Red		1.0	1.0					1.0	1.0		

Cycle Length: 110.0 secs

Intersection Performance Summary

Appr/ Lane Grp	Lane Group Capacity	Adj Sat Flow Rate (s)	Ratios v/c	Ratios g/C	Lane Group Delay	Lane Group LOS	Approach Delay	Approach LOS
Eastbound								
L	360	1805	0.48	0.32	34.8	C		
T	387	1900	0.29	0.20	39.0	D	35.1	D
R	580	1615	0.06	0.36	23.3	C		
Westbound								
L	380	1805	0.34	0.32	30.1	C		
T	387	1900	0.35	0.20	40.1	D	34.3	C
R	580	1615	0.04	0.36	23.0	C		
Northbound								
L	335	1805	0.05	0.59	12.6	B		
T	1569	3610	0.73	0.43	28.7	C	25.9	C
R	888	1615	0.29	0.55	14.0	B		
Southbound								
L	292	1805	0.04	0.59	14.1	B		
T	1569	3610	0.63	0.43	26.2	C	25.4	C
R	888	1615	0.06	0.55	11.6	B		

Intersection Delay = 27.5 (sec/veh) Intersection LOS = C

HCS2000: Signalized Intersections Release 4.1d

Analyst: MA
Agency: GDOT
Date: 5/22/2005
Period: AM Peak
Project ID:
E/W St: Carl Bethlehem Road

Inter.:West Winder Bypass at Carl Bethlehem Rd
Area Type: All other areas
Jurisd: Barrow County
Year : Year 2029

N/S St: West Winder Bypass

SIGNALIZED INTERSECTION SUMMARY

	Eastbound			Westbound			Northbound			Southbound		
	L	T	R	L	T	R	L	T	R	L	T	R
No. Lanes	1	1	1	1	1	1	1	2	1	1	2	1
LGConfig	L	T	R	L	T	R	L	T	R	L	T	R
Volume	65	310	315	15	300	135	165	550	15	60	890	30
Lane Width	12.0	12.0	12.0	12.0	12.0	12.0	12.0	12.0	12.0	12.0	12.0	12.0
RTOR Vol			0			0			0			0

Duration 0.25 Area Type: All other areas

Signal Operations

Phase Combination		1	2	3	4			5	6	7	8
EB	Left	P	P			NB	Left	P	P		
	Thru		P				Thru		P		
	Right		P				Right		P		
	Peds						Peds				
WB	Left	P	P			SB	Left	P	P		
	Thru		P				Thru		P		
	Right		P				Right		P		
	Peds						Peds				
NB	Right	P				EB	Right	P			
SB	Right	P				WB	Right	P			
Green		5.0	34.0					6.0	55.0		
Yellow		4.0	4.0					4.0	4.0		
All Red		1.0	1.0					1.0	1.0		

Cycle Length: 120.0 secs

Intersection Performance Summary

Appr/ Lane Grp	Lane Group Capacity	Adj Sat Flow Rate (s)	Ratios v/c	Ratios g/C	Lane Group Delay	Lane Group LOS	Approach Delay	Approach LOS
Eastbound								
L	253	1805	0.28	0.37	29.4	C		
T	538	1900	0.63	0.28	42.9	D	37.3	D
R	606	1615	0.56	0.38	33.5	C		
Westbound								
L	245	1805	0.07	0.37	26.5	C		
T	538	1900	0.61	0.28	42.2	D	37.0	D
R	606	1615	0.24	0.38	26.7	C		
Northbound								
L	251	1805	0.71	0.55	33.4	C		
T	1655	3610	0.36	0.46	21.7	C	24.2	C
R	875	1615	0.02	0.54	12.8	B		
Southbound								
L	402	1805	0.16	0.55	14.3	B		
T	1655	3610	0.58	0.46	25.6	C	24.5	C
R	875	1615	0.04	0.54	12.9	B		

Intersection Delay = 29.5 (sec/veh) Intersection LOS = C

HCS2000: Signalized Intersections Release 4.1d

Analyst: MA
Agency: GDOT
Date: 5/22/2005
Period: PM Peak
Project ID:
E/W St: Carl Bethlehem Road

Inter.:West Winder Bypass at Carl Bethlehem Rd
Area Type: All other areas
Jurisd: Barrow County
Year : Year 2029

N/S St: West Winder Bypass

SIGNALIZED INTERSECTION SUMMARY

	Eastbound			Westbound			Northbound			Southbound		
	L	T	R	L	T	R	L	T	R	L	T	R
No. Lanes	1	1	1	1	1	1	1	2	1	1	2	1
LGConfig	L	T	R	L	T	R	L	T	R	L	T	R
Volume	45	300	105	15	315	120	335	880	15	180	850	60
Lane Width	12.0	12.0	12.0	12.0	12.0	12.0	12.0	12.0	12.0	12.0	12.0	12.0
RTOR Vol			0			0			0			0

Duration 0.25 Area Type: All other areas

Signal Operations

Phase Combination	1	2	3	4			5	6	7	8
EB Left	P	P			NB	Left	P	P		
Thru		P				Thru		P		
Right		P				Right		P		
Peds						Peds				
WB Left	P	P			SB	Left	P	P		
Thru		P				Thru		P		
Right		P				Right		P		
Peds						Peds				
NB Right	P				EB	Right	P			
SB Right	P				WB	Right	P			
Green	5.0	23.2					14.3	47.5		
Yellow	4.0	4.0					4.0	4.0		
All Red	1.0	1.0					1.0	1.0		

Cycle Length: 110.0 secs

Intersection Performance Summary

Appr/ Lane Grp	Lane Group Capacity	Adj Sat Flow Rate (s)	Ratios v/c	Ratios g/C	Lane Group Delay	Lane Group LOS	Approach Delay	Approach LOS
Eastbound								
L	157	1805	0.31	0.30	34.7	C		
T	401	1900	0.81	0.21	57.7	E	47.3	D
R	624	1615	0.18	0.39	22.9	C		
Westbound								
L	170	1805	0.09	0.30	29.8	C		
T	401	1900	0.85	0.21	61.7	E	50.5	D
R	624	1615	0.21	0.39	23.3	C		
Northbound								
L	392	1805	0.93	0.61	50.0	D		
T	1559	3610	0.61	0.43	26.0	C	32.4	C
R	844	1615	0.02	0.52	12.7	B		
Southbound								
L	381	1805	0.51	0.61	18.5	B		
T	1559	3610	0.59	0.43	25.5	C	23.7	C
R	844	1615	0.08	0.52	13.2	B		

Intersection Delay = 34.0 (sec/veh) Intersection LOS = C

HCS2000: Unsignalized Intersections Release 4.1d

TWO-WAY STOP CONTROL SUMMARY

Analyst: MA
Agency/Co.: GDOT
Date Performed: 5/22/2005
Analysis Time Period: AM Peak
Intersection: West Winder Bypass@ Burson Maddox Road
Jurisdiction: Barrow County
Units: U. S. Customary
Analysis Year: Year 2029
Project ID:
East/West Street: Burson Maddox Road
North/South Street: West Winder Bypass
Intersection Orientation: NS Study period (hrs): 0.25

Vehicle Volumes and Adjustments

Major Street: Approach	Northbound			Southbound		
Movement	1	2	3	4	5	6
	L	T	R	L	T	R
Volume		735	15	30	950	
Peak-Hour Factor, PHF		0.92	0.92	0.92	0.92	
Hourly Flow Rate, HFR		798	16	32	1032	
Percent Heavy Vehicles		--	--	0	--	--
Median Type/Storage	Undivided			/		
RT Channelized?			No			
Lanes		2	1	1	2	
Configuration		T	R	L	T	
Upstream Signal?		No			No	

Minor Street: Approach	Westbound			Eastbound		
Movement	7	8	9	10	11	12
	L	T	R	L	T	R
Volume	30		15			
Peak Hour Factor, PHF	0.92		0.92			
Hourly Flow Rate, HFR	32		16			
Percent Heavy Vehicles	0		0			
Percent Grade (%)		0			0	
Flared Approach: Exists?/Storage			No	/		/
Lanes	0		0			
Configuration		LR				

Delay, Queue Length, and Level of Service

Approach	NB	SB	Westbound			Eastbound		
Movement	1	4	7	8	9	10	11	12
Lane Config		L		LR				
v (vph)		32		48				
C(m) (vph)		822		180				
v/c		0.04		0.27				
95% queue length		0.12		1.03				
Control Delay		9.6		32.1				
LOS		A		D				
Approach Delay				32.1				
Approach LOS				D				

HCS2000: Unsignalized Intersections Release 4.1d

TWO-WAY STOP CONTROL SUMMARY

Analyst: MA
Agency/Co.: GDOT
Date Performed: 5/22/2005
Analysis Time Period: PM Peak
Intersection: West Winder Bypass@ Burson Maddox Road
Jurisdiction: Barrow County
Units: U. S. Customary
Analysis Year: Year 2029
Project ID:
East/West Street: Burson Maddox Road
North/South Street: West Winder Bypass
Intersection Orientation: NS Study period (hrs): 0.25

Vehicle Volumes and Adjustments

Major Street: Approach	Northbound			Southbound		
Movement	1	2	3	4	5	6
	L	T	R	L	T	R
Volume		1015	30	15	1075	
Peak-Hour Factor, PHF		0.92	0.92	0.92	0.92	
Hourly Flow Rate, HFR		1103	32	16	1168	
Percent Heavy Vehicles		--	--	0	--	--
Median Type/Storage	Undivided			/		
RT Channelized?			No			
Lanes		2	1	1	2	
Configuration		T	R	L	T	
Upstream Signal?		No			No	

Minor Street: Approach	Westbound			Eastbound		
Movement	7	8	9	10	11	12
	L	T	R	L	T	R
Volume	15		15			
Peak Hour Factor, PHF	0.92		0.92			
Hourly Flow Rate, HFR	16		16			
Percent Heavy Vehicles	0		0			
Percent Grade (%)		0			0	
Flared Approach: Exists?/Storage			No	/		/
Lanes	0		0			
Configuration		LR				

Delay, Queue Length, and Level of Service

Approach	NB	SB	Westbound			Eastbound		
Movement	1	4	7	8	9	10	11	12
Lane Config		L		LR				
v (vph)		16		32				
C(m) (vph)		623		137				
v/c		0.03		0.23				
95% queue length		0.08		0.86				
Control Delay		10.9		39.1				
LOS		B		E				
Approach Delay				39.1				
Approach LOS				E				

HCS2000: Signalized Intersections Release 4.1d

Analyst: MA
Agency: GDOT
Date: 5/22/2005
Period: AM Peak
Project ID:
E/W St: Matthews School Rd

Inter.: West Winder Bypass at Matthews School Road
Area Type: All other areas
Jurisd: Barrow County
Year : Year 2029

N/S St: West Winder Bypass

SIGNALIZED INTERSECTION SUMMARY

	Eastbound			Westbound			Northbound			Southbound		
	L	T	R	L	T	R	L	T	R	L	T	R
No. Lanes	1	1	1	1	1	1	1	2	1	1	2	1
LGConfig	L	T	R	L	T	R	L	T	R	L	T	R
Volume	40	135	165	90	85	135	105	615	30	60	725	60
Lane Width	12.0	12.0	12.0	12.0	12.0	12.0	12.0	12.0	12.0	12.0	12.0	12.0
RTOR Vol			0			0			0			0

Duration 0.25 Area Type: All other areas

Signal Operations

Phase Combination		1	2	3	4			5	6	7	8
EB	Left	P	P			NB	Left	P	P		
	Thru		P				Thru		P		
	Right		P				Right		P		
	Peds						Peds				
WB	Left	P	P			SB	Left	P	P		
	Thru		P				Thru		P		
	Right		P				Right		P		
	Peds						Peds				
NB	Right	P				EB	Right	P			
SB	Right	P				WB	Right	P			
Green		5.1	18.4					5.0	41.5		
Yellow		4.0	4.0					4.0	4.0		
All Red		1.0	1.0					1.0	1.0		

Cycle Length: 90.0 secs

Intersection Performance Summary

Appr/ Lane Grp	Lane Group Capacity	Adj Sat Flow Rate (s)	Ratios v/c	Ratios g/C	Lane Group Delay	Lane Group LOS	Approach Delay	Approach LOS
Eastbound								
L	373	1805	0.12	0.32	22.3	C		
T	388	1900	0.38	0.20	33.7	C	28.4	C
R	510	1615	0.35	0.32	25.6	C		
Westbound								
L	341	1805	0.29	0.32	24.6	C		
T	388	1900	0.24	0.20	31.4	C	26.4	C
R	510	1615	0.29	0.32	24.6	C		
Northbound								
L	339	1805	0.34	0.57	12.9	B		
T	1665	3610	0.40	0.46	16.8	B	15.9	B
R	926	1615	0.04	0.57	8.4	A		
Southbound								
L	391	1805	0.17	0.57	10.3	B		
T	1665	3610	0.47	0.46	17.7	B	16.5	B
R	926	1615	0.07	0.57	8.7	A		

Intersection Delay = 19.5 (sec/veh) Intersection LOS = B

HCS2000: Signalized Intersections Release 4.1d

Analyst: MA
Agency: GDOT
Date: 5/22/2005
Period: PM Peak
Project ID:
E/W St: Matthews School Rd

Inter.: West Winder Bypass at Matthews School Road
Area Type: All other areas
Jurisd: Barrow County
Year : Year 2029

N/S St: West Winder Bypass

SIGNALIZED INTERSECTION SUMMARY

	Eastbound			Westbound			Northbound			Southbound		
	L	T	R	L	T	R	L	T	R	L	T	R
No. Lanes	1	1	1	1	1	1	1	2	1	1	2	1
LGConfig	L	T	R	L	T	R	L	T	R	L	T	R
Volume	85	125	230	60	150	120	265	645	120	150	800	140
Lane Width	12.0	12.0	12.0	12.0	12.0	12.0	12.0	12.0	12.0	12.0	12.0	12.0
RTOR Vol			0			0			0			0

Duration 0.25 Area Type: All other areas

Signal Operations

Phase Combination		1	2	3	4			5	6	7	8
EB	Left	P	P			NB	Left	P	P		
	Thru		P				Thru		P		
	Right		P				Right		P		
	Peds						Peds				
WB	Left	P	P			SB	Left	P	P		
	Thru		P				Thru		P		
	Right		P				Right		P		
	Peds						Peds				
NB	Right	P				EB	Right	P			
SB	Right	P				WB	Right	P			
Green		7.0	10.4					6.7	45.9		
Yellow		4.0	4.0					4.0	4.0		
All Red		1.0	1.0					1.0	1.0		

Cycle Length: 90.0 secs

Intersection Performance Summary

Appr/ Lane Grp	Lane Group Capacity	Adj Sat Flow Rate (s)	Ratios v/c	Ratios g/C	Lane Group Delay	Lane Group LOS	Approach Delay	Approach LOS
Eastbound								
L	243	1805	0.38	0.25	31.6	C		
T	220	1900	0.62	0.12	50.3	D	40.1	D
R	397	1615	0.63	0.25	37.7	D		
Westbound								
L	266	1805	0.24	0.25	28.8	C		
T	220	1900	0.74	0.12	58.5	E	42.8	D
R	397	1615	0.33	0.25	30.0	C		
Northbound								
L	381	1805	0.76	0.64	22.4	C		
T	1841	3610	0.38	0.51	14.0	B	15.3	B
R	1039	1615	0.13	0.64	6.5	A		
Southbound								
L	455	1805	0.36	0.64	9.5	A		
T	1841	3610	0.47	0.51	15.1	B	13.3	B
R	1039	1615	0.15	0.64	6.6	A		

Intersection Delay = 21.4 (sec/veh) Intersection LOS = C

HCS2000: Signalized Intersections Release 4.1d

Analyst: MA
Agency: GDOT
Date: 5/22/2005
Period: AM Peak
Project ID:
E/W St: SR 8/Atlanta Hwy

Inter.: Matthews School Rd at SR8/Atlanta Hwy
Area Type: All other areas
Jurisd: Barrow County
Year : Year 2029

N/S St: Matthews School Rd

SIGNALIZED INTERSECTION SUMMARY

	Eastbound			Westbound			Northbound			Southbound		
	L	T	R	L	T	R	L	T	R	L	T	R
No. Lanes	0	1	1	1	1	0	1	0	1	0	0	0
LGConfig		T	R	L	T		L		R			
Volume		370	140	200	320		40		210			
Lane Width		12.0	12.0	12.0	12.0		12.0		12.0			
RTOR Vol			0						0			

Duration 0.25 Area Type: All other areas

Signal Operations

Phase Combination		1	2	3	4			5	6	7	8
EB	Left					NB	Left	P			
	Thru		P				Thru				
	Right		P				Right	P			
	Peds						Peds				
WB	Left	P	P			SB	Left				
	Thru	P	P				Thru				
	Right						Right				
	Peds						Peds				
NB	Right	P				EB	Right	P			
SB	Right					WB	Right				
Green		13.5	54.4					7.1			
Yellow		4.0	4.0					4.0			
All Red		1.0	1.0					1.0			

Cycle Length: 90.0 secs

Intersection Performance Summary

Appr/ Lane Grp	Lane Group Capacity	Adj Sat Flow Rate (s)	Ratios v/c	Ratios g/C	Lane Group Delay	Lane Group LOS	Approach Delay	Approach LOS
Eastbound								
T	1148	1900	0.35	0.60	9.8	A	8.1	A
R	1193	1615	0.13	0.74	3.6	A		
Westbound								
L	811	1805	0.27	0.81	3.5	A		
T	1539	1900	0.23	0.81	2.3	A	2.8	A
Northbound								
L	142	1805	0.30	0.08	44.5	D		
							32.8	C
R	459	1615	0.50	0.28	30.6	C		
Southbound								

Intersection Delay = 10.7 (sec/veh) Intersection LOS = B

HCS2000: Signalized Intersections Release 4.1d

Analyst: MA
Agency: GDOT
Date: 5/22/2005
Period: PM Peak
Project ID:
E/W St: SR 8/Atlanta Hwy

Inter.: Matthews School Rd at SR 8/Atlanta Hwy
Area Type: All other areas
Jurisd: Barrow County
Year : Year 2029

N/S St: Matthews School Rd

SIGNALIZED INTERSECTION SUMMARY

	Eastbound			Westbound			Northbound			Southbound		
	L	T	R	L	T	R	L	T	R	L	T	R
No. Lanes	0	1	1	1	1	0	1	0	1	0	0	0
LGConfig		T	R	L	T		L		R			
Volume		640	185	255	495		125		430			
Lane Width		12.0	12.0	12.0	12.0		12.0		12.0			
RTOR Vol			0						0			

Duration 0.25 Area Type: All other areas

Signal Operations

Phase Combination		1	2	3	4			5	6	7	8
EB	Left					NB	Left	P			
	Thru		P				Thru				
	Right		P				Right	P			
	Peds						Peds				
WB	Left	P	P			SB	Left				
	Thru	P	P				Thru				
	Right						Right				
	Peds						Peds				
NB	Right	P				EB	Right	P			
SB	Right					WB	Right				
Green		12.5	43.4					19.1			
Yellow		4.0	4.0					4.0			
All Red		1.0	1.0					1.0			

Cycle Length: 90.0 secs

Intersection Performance Summary

Appr/ Lane Grp	Lane Group Capacity	Adj Sat Flow Rate (s)	Ratios v/c	Ratios g/C	Lane Group Delay	Lane Group LOS	Approach Delay	Approach LOS
Eastbound								
T	916	1900	0.76	0.48	24.9	C	20.1	C
R	1211	1615	0.17	0.75	3.5	A		
Westbound								
L	477	1805	0.58	0.68	14.8	B		
T	1286	1900	0.42	0.68	7.6	A	10.0+	B
Northbound								
L	383	1805	0.36	0.21	32.8	C		
							29.6	C
R	657	1615	0.71	0.41	28.7	C		
Southbound								

Intersection Delay = 19.0 (sec/veh) Intersection LOS = B

HCS2000: Signalized Intersections Release 4.1d

Analyst: MA
Agency: GDOT
Date: 5/22/2005
Period: AM Peak
Project ID:
E/W St: Bankhead Highway

Inter.: Bankhead Highway at Connector Road
Area Type: All other areas
Jurisd: Barrow County
Year : Year 2029

N/S St: Connector Road

SIGNALIZED INTERSECTION SUMMARY

	Eastbound			Westbound			Northbound			Southbound		
	L	T	R	L	T	R	L	T	R	L	T	R
No. Lanes	1	1	0	0	1	1	0	0	0	1	0	1
LGConfig	L	T			T	R				L		R
Volume	130	130			210	120				185		180
Lane Width	12.0	12.0			12.0	12.0				12.0		12.0
RTOR Vol						0						0

Duration 0.25 Area Type: All other areas

Signal Operations

Phase Combination		1	2	3	4			5	6	7	8
EB	Left	P	P			NB	Left				
	Thru	P	P				Thru				
	Right						Right				
	Peds						Peds				
WB	Left					SB	Left	P			
	Thru		P				Thru				
	Right		P				Right	P			
	Peds						Peds				
NB	Right					EB	Right				
SB	Right	P				WB	Right	P			
Green		15.0	35.0					25.0			
Yellow		4.0	4.0					4.0			
All Red		1.0	1.0					1.0			

Cycle Length: 90.0 secs

Intersection Performance Summary

Appr/ Lane Grp	Lane Group Capacity	Adj Sat Flow Rate (s)	Ratios v/c	Ratios g/C	Lane Group Delay	Lane Group LOS	Approach Delay	Approach LOS
Eastbound								
L	678	1805	0.21	0.61	8.8	A		
T	1161	1900	0.12	0.61	7.6	A	8.2	A
Westbound								
T	739	1900	0.31	0.39	20.2	C	14.3	B
R	1166	1615	0.11	0.72	4.0	A		
Northbound								
Southbound								
L	501	1805	0.40	0.28	28.8	C		
							21.3	C
R	808	1615	0.24	0.50	13.5	B		

Intersection Delay = 15.3 (sec/veh) Intersection LOS = B

HCS2000: Signalized Intersections Release 4.1d

Analyst: MA
Agency: GDOT
Date: 5/22/2005
Period: PM Peak
Project ID:
E/W St: Bankhead Highway

Inter.: Bankhead Highway at Connector Road
Area Type: All other areas
Jurisd: Barrow County
Year : Year 2029

N/S St: Connector Road

SIGNALIZED INTERSECTION SUMMARY

	Eastbound			Westbound			Northbound			Southbound		
	L	T	R	L	T	R	L	T	R	L	T	R
No. Lanes	1	1	0	0	1	1	0	0	0	1	0	1
LGConfig	L	T			T	R				L		R
Volume	270	220			265	155				80		125
Lane Width	12.0	12.0			12.0	12.0				12.0		12.0
RTOR Vol						0						0

Duration 0.25 Area Type: All other areas

Signal Operations

Phase Combination		1	2	3	4			5	6	7	8
EB	Left	P	P			NB	Left				
	Thru	P	P				Thru				
	Right						Right				
	Peds						Peds				
WB	Left					SB	Left	P			
	Thru		P				Thru				
	Right		P				Right	P			
	Peds						Peds				
NB	Right					EB	Right				
SB	Right	P				WB	Right	P			
Green		15.0	35.0					25.0			
Yellow		4.0	4.0					4.0			
All Red		1.0	1.0					1.0			

Cycle Length: 90.0 secs

Intersection Performance Summary

Appr/ Lane Grp	Lane Group Capacity	Adj Sat Flow Rate (s)	Ratios v/c	Ratios g/C	Lane Group Delay	Lane Group LOS	Approach Delay	Approach LOS
Eastbound								
L	631	1805	0.46	0.61	11.9	B		
T	1161	1900	0.21	0.61	8.2	A	10.2	B
Westbound								
T	739	1900	0.39	0.39	21.4	C	15.0	B
R	1166	1615	0.14	0.72	4.1	A		
Northbound								
Southbound								
L	501	1805	0.17	0.28	25.4	C		
							17.7	B
R	808	1615	0.17	0.50	12.7	B		

Intersection Delay = 13.4 (sec/veh) Intersection LOS = B

HCS2000: Signalized Intersections Release 4.1d

Analyst: MA
Agency: GDOT
Date: 5/22/2005
Period: AM Peak
Project ID:
E/W St: Connector Road

Inter.: West Winder Bypass at Connector Rd
Area Type: All other areas
Jurisd: Barrow County
Year : Year 2029

N/S St: West Winder Bypass

SIGNALIZED INTERSECTION SUMMARY

	Eastbound			Westbound			Northbound			Southbound		
	L	T	R	L	T	R	L	T	R	L	T	R
No. Lanes	0	0	0	1	0	1	0	2	1	1	2	0
LGConfig				L		R		T	R	L	T	
Volume				175		175		660	130	235	670	
Lane Width				12.0		12.0		12.0	12.0	12.0	12.0	
RTOR Vol						0			0			

Duration 0.25 Area Type: All other areas

Signal Operations

Phase Combination	1	2	3	4		5	6	7	8
EB Left					NB Left				
Thru					Thru		P		
Right					Right		P		
Peds					Peds				
WB Left	P				SB Left	P	P		
Thru					Thru	P	P		
Right	P				Right				
Peds					Peds				
NB Right	P				EB Right				
SB Right					WB Right	P			
Green	15.0					18.0	42.0		
Yellow	4.0					4.0	4.0		
All Red	1.0					1.0	1.0		

Cycle Length: 90.0 secs

Intersection Performance Summary

Appr/ Lane Grp	Lane Group Capacity	Adj Sat Flow Rate (s)	Ratios v/c	Ratios g/C	Lane Group Delay	Lane Group LOS	Approach Delay	Approach LOS
Eastbound								
Westbound								
L	301	1805	0.63	0.17	44.6	D		
							31.3	C
R	682	1615	0.28	0.42	18.0	B		
Northbound								
T	1685	3610	0.43	0.47	16.8	B	14.8	B
R	1113	1615	0.13	0.69	5.0	A		
Southbound								
L	635	1805	0.40	0.72	7.3	A		
T	2607	3610	0.28	0.72	4.6	A	5.3	A

Intersection Delay = 13.4 (sec/veh) Intersection LOS = B

HCS2000: Signalized Intersections Release 4.1d

Analyst: MA
Agency: GDOT
Date: 5/22/2005
Period: PM Peak
Project ID:
E/W St: Connector Road

Inter.: West Winder Bypass at Connector Road
Area Type: All other areas
Jurisd: Barrow County
Year : Year 2029

N/S St: West Winder Bypass

SIGNALIZED INTERSECTION SUMMARY

	Eastbound			Westbound			Northbound			Southbound		
	L	T	R	L	T	R	L	T	R	L	T	R
No. Lanes	0	0	0	1	0	1	0	2	1	1	2	0
LGConfig				L		R		T	R	L	T	
Volume				160		265		750	100	105	930	
Lane Width				12.0		12.0		12.0	12.0	12.0	12.0	
RTOR Vol						0			0			

Duration 0.25 Area Type: All other areas

Signal Operations

Phase Combination	1	2	3	4			5	6	7	8
EB Left					NB	Left				
Thru						Thru		P		
Right						Right		P		
Peds						Peds				
WB Left		P			SB	Left	P	P		
Thru						Thru	P	P		
Right		P				Right				
Peds						Peds				
NB Right		P			EB	Right				
SB Right					WB	Right	P			
Green		15.0					18.0	42.0		
Yellow		4.0					4.0	4.0		
All Red		1.0					1.0	1.0		

Cycle Length: 90.0 secs

Intersection Performance Summary

Appr/ Lane Grp	Lane Group Capacity	Adj Sat Flow Rate (s)	Ratios v/c	Ratios g/C	Lane Group Delay	Lane Group LOS	Approach Delay	Approach LOS
Eastbound								
Westbound								
L	301	1805	0.58	0.17	42.4	D		
							28.6	C
R	682	1615	0.42	0.42	20.2	C		
Northbound								
T	1685	3610	0.48	0.47	17.5	B	16.0	B
R	1113	1615	0.10	0.69	4.8	A		
Southbound								
L	593	1805	0.19	0.72	5.9	A		
T	2607	3610	0.39	0.72	5.3	A	5.3	A

Intersection Delay = 13.5 (sec/veh) Intersection LOS = B

HCS2000: Signalized Intersections Release 4.1d

Analyst: MA
Agency: GDOT
Date: 5/22/2005
Period: AM Peak
Project ID:
E/W St: Pearl Pentecost Rd

Inter.: West Winder Bypass at Pentecost Rd
Area Type: All other areas
Jurisd: Barrow County
Year : Year 2029

N/S St: West Winder Bypass

SIGNALIZED INTERSECTION SUMMARY

	Eastbound			Westbound			Northbound			Southbound		
	L	T	R	L	T	R	L	T	R	L	T	R
No. Lanes	1	1	1	1	1	1	1	2	1	1	2	1
LGConfig	L	T	R	L	T	R	L	T	R	L	T	R
Volume	25	150	260	45	65	105	110	675	50	150	600	10
Lane Width	12.0	12.0	12.0	12.0	12.0	12.0	12.0	12.0	12.0	12.0	12.0	12.0
RTOR Vol			0			0			0			0

Duration 0.25 Area Type: All other areas

Signal Operations

Phase Combination		1	2	3	4			5	6	7	8
EB	Left	P	P			NB	Left	P	P		
	Thru		P				Thru		P		
	Right		P				Right		P		
	Peds						Peds				
WB	Left	P	P			SB	Left	P	P		
	Thru		P				Thru		P		
	Right		P				Right		P		
	Peds						Peds				
NB	Right	P				EB	Right	P			
SB	Right	P				WB	Right	P			
Green		6.8	17.9					6.1	39.2		
Yellow		4.0	4.0					4.0	4.0		
All Red		1.0	1.0					1.0	1.0		

Cycle Length: 90.0 secs

Intersection Performance Summary

Appr/ Lane Grp	Lane Group Capacity	Adj Sat Flow Rate (s)	Ratios v/c	Ratios g/C	Lane Group Delay	Lane Group LOS	Approach Delay	Approach LOS
Eastbound								
L	405	1805	0.07	0.33	21.0	C		
T	378	1900	0.43	0.20	35.1	D	30.7	C
R	520	1615	0.54	0.32	29.1	C		
Westbound								
L	353	1805	0.14	0.33	21.9	C		
T	378	1900	0.19	0.20	31.1	C	25.3	C
R	520	1615	0.22	0.32	23.2	C		
Northbound								
L	397	1805	0.30	0.56	12.3	B		
T	1572	3610	0.47	0.44	19.0	B	17.5	B
R	915	1615	0.06	0.57	8.9	A		
Southbound								
L	361	1805	0.45	0.56	15.1	B		
T	1572	3610	0.41	0.44	18.3	B	17.5	B
R	915	1615	0.01	0.57	8.5	A		

Intersection Delay = 20.8 (sec/veh) Intersection LOS = C

HCS2000: Signalized Intersections Release 4.1d

Analyst: MA
Agency: GDOT
Date: 5/22/2005
Period: PM Peak
Project ID:
E/W St: Pearl Pentecost Rd

Inter.: West Winder Bypass at Pentecost Rd
Area Type: All other areas
Jurisd: Barrow County
Year : Year 2029

N/S St: West Winder Bypass

SIGNALIZED INTERSECTION SUMMARY

	Eastbound			Westbound			Northbound			Southbound		
	L	T	R	L	T	R	L	T	R	L	T	R
No. Lanes	1	1	1	1	1	1	1	2	1	1	2	1
LGConfig	L	T	R	L	T	R	L	T	R	L	T	R
Volume	10	85	150	70	105	170	225	735	55	65	815	45
Lane Width	12.0	12.0	12.0	12.0	12.0	12.0	12.0	12.0	12.0	12.0	12.0	12.0
RTOR Vol			0			0			0			0

Duration 0.25 Area Type: All other areas

Signal Operations

Phase Combination		1	2	3	4			5	6	7	8
EB	Left	P	P			NB	Left	P	P		
	Thru		P				Thru		P		
	Right		P				Right		P		
	Peds						Peds				
WB	Left	P	P			SB	Left	P	P		
	Thru		P				Thru		P		
	Right		P				Right		P		
	Peds						Peds				
NB	Right	P				EB	Right	P			
SB	Right	P				WB	Right	P			
Green		6.8	17.2					6.1	39.9		
Yellow		4.0	4.0					4.0	4.0		
All Red		1.0	1.0					1.0	1.0		

Cycle Length: 90.0 secs

Intersection Performance Summary

Appr/ Lane Grp	Lane Group Capacity	Adj Sat Flow Rate (s)	Ratios v/c	Ratios g/C	Lane Group Delay	Lane Group LOS	Approach Delay	Approach LOS
Eastbound								
L	384	1805	0.03	0.32	21.1	C		
T	363	1900	0.25	0.19	32.6	C	27.6	C
R	508	1615	0.32	0.31	25.2	C		
Westbound								
L	389	1805	0.20	0.32	22.8	C		
T	363	1900	0.31	0.19	33.6	C	27.6	C
R	508	1615	0.36	0.31	25.9	C		
Northbound								
L	308	1805	0.80	0.57	41.7	D		
T	1600	3610	0.50	0.44	19.0	B	23.5	C
R	928	1615	0.06	0.57	8.6	A		
Southbound								
L	341	1805	0.21	0.57	11.6	B		
T	1600	3610	0.55	0.44	19.9	B	18.7	B
R	928	1615	0.05	0.57	8.5	A		

Intersection Delay = 22.7 (sec/veh) Intersection LOS = C

HCS2000: Signalized Intersections Release 4.1d

Analyst: MA
Agency: GDOT
Date: 5/22/2005
Period: AM Peak
Project ID:
E/W St: SR 211

Inter.: West Winder Bypass at SR 211
Area Type: All other areas
Jurisd: Barrow County
Year : Year 2029

N/S St: West Winder Bypass

SIGNALIZED INTERSECTION SUMMARY

	Eastbound			Westbound			Northbound			Southbound		
	L	T	R	L	T	R	L	T	R	L	T	R
No. Lanes	0	0	0	1	0	1	0	2	1	2	2	0
LGConfig				L		R		T	R	L	T	
Volume				60		240		665	140	550	700	
Lane Width				12.0		12.0		12.0	12.0	12.0	12.0	
RTOR Vol						0			0			

Duration 0.25 Area Type: All other areas

Signal Operations

Phase Combination	1	2	3	4			5	6	7	8
EB Left					NB	Left				
Thru						Thru		P		
Right						Right		P		
Peds						Peds				
WB Left		P			SB	Left	P			
Thru						Thru	P	P		
Right		P				Right				
Peds						Peds				
NB Right		P			EB	Right				
SB Right					WB	Right	P			
Green		15.0					18.0	42.0		
Yellow		4.0					4.0	4.0		
All Red		1.0					1.0	1.0		

Cycle Length: 90.0 secs

Intersection Performance Summary

Appr/ Lane Grp	Lane Group Capacity	Adj Sat Flow Rate (s)	Ratios v/c	Ratios g/C	Lane Group Delay	Lane Group LOS	Approach Delay	Approach LOS
Eastbound								
Westbound								
L	301	1805	0.22	0.17	34.1	C		
							22.4	C
R	682	1615	0.38	0.42	19.5	B		
Northbound								
T	1685	3610	0.43	0.47	16.8	B	14.8	B
R	1113	1615	0.14	0.69	5.1	A		
Southbound								
L	700	3502	0.85	0.20	47.4	D		
T	2607	3610	0.29	0.72	4.7	A	23.5	C

Intersection Delay = 20.4 (sec/veh) Intersection LOS = C

HCS2000: Signalized Intersections Release 4.1d

Analyst: MA
Agency: GDOT
Date: 5/22/2005
Period: PM Peak
Project ID:
E/W St: SR 211

Inter.: West Winder Bypass at SR 211
Area Type: All other areas
Jurisd: Barrow County
Year : Year 2029

N/S St: West Winder Bypass

SIGNALIZED INTERSECTION SUMMARY

	Eastbound			Westbound			Northbound			Southbound		
	L	T	R	L	T	R	L	T	R	L	T	R
No. Lanes	0	0	0	1	0	1	0	2	1	2	2	0
LGConfig				L		R		T	R	L	T	
Volume				160		580		850	65	320	765	
Lane Width				12.0		12.0		12.0	12.0	12.0	12.0	
RTOR Vol						0			0			

Duration 0.25 Area Type: All other areas

Signal Operations

Phase Combination	1	2	3	4		5	6	7	8
EB Left					NB Left				
Thru					Thru		P		
Right					Right		P		
Peds					Peds				
WB Left		P			SB Left	P			
Thru					Thru	P	P		
Right		P			Right				
Peds					Peds				
NB Right		P			EB Right				
SB Right					WB Right	P			
Green		20.0				20.0	35.0		
Yellow		4.0				4.0	4.0		
All Red		1.0				1.0	1.0		

Cycle Length: 90.0 secs

Intersection Performance Summary

Appr/ Lane Grp	Lane Group Capacity	Adj Sat Flow Rate (s)	Ratios v/c	Ratios g/C	Lane Group Delay	Lane Group LOS	Approach Delay	Approach LOS
Eastbound								
Westbound								
L	401	1805	0.43	0.22	33.5	C		
							27.5	C
R	808	1615	0.78	0.50	25.8	C		
Northbound								
T	1404	3610	0.66	0.39	25.0	C	23.6	C
R	1077	1615	0.07	0.67	5.3	A		
Southbound								
L	778	3502	0.45	0.22	32.1	C		
T	2407	3610	0.35	0.67	6.9	A	14.3	B

Intersection Delay = 21.0 (sec/veh) Intersection LOS = C

Minutes of Initial Concept Team Meeting

March 30, 2005, 10:00 A.M. Barrow County Administration Bldg

West Winder Bypass
Project Number: CSSTP-0006-00 (326) & (327)
P.I. Numbers: 0006326 & 0006327
Barrow County

A list of the attendees is attached.

Mr. Mike Davidson, Georgia Department of Transportation (GDOT) Road Design Project Manager, began the meeting by asking everyone to introduce him or herself and to sign the attendance sheet. Mr. Davidson stated that all the submittals and coordination of this project are to go through his office. He then called on Mr. Chris Parypinski of Moreland Altobelli Associates, Inc. (MA), to describe the alignment of the proposed West Winder Bypass. He described the project as beginning with the widening of Patrick Mill Road from Tom Miller Road to approximately 1,000 feet south of Burson Maddox Road. The roadway would continue north on new location, bridge over SR 8, the CSX railroad track and Bankhead Highway, cross Pearl Pentecost Road and connect to SR 211. The project would also include connector roadways from the West Winder Bypass to SR 8 and to Bankhead Highway.

Mr. Mike Davidson then opened the meeting to questions and comments by all attendees.

Typical Section

Ms. Karla Poshedly asked if the typical section of the road should have rural or urban shoulders. Mr. McMurry advised that the road should be constructed with rural (paved) shoulders. He said however, some sections of the roadway could be constructed with urban shoulders (curb & gutter) if deemed necessary due to design considerations. He stated that the speed design should be 45 mph.

Signing

GDOT pointed out that extra signing would be needed to direct traffic from Bankhead Highway and Matthews School Road to the Bypass. The connector roads are used for local access to the West Winder Bypass in lieu of ramps.

Programming

Federal funds are being used for this project from the Q24 fund, with construction funds for Phase 1 (Matthews School Rd to Pearl Pentecost Rd) slated for 2012 and Phase 2 (SR 316 to SR 211) in long range. Chairman Garrison, and Commissioner Wehunt from Barrow County as well as Barry Edgar and Ernie Graham with the City of Winder were very concerned about these late dates and expressed a strong interest in moving these funds forward in order to complete this project much sooner. GDOT was receptive to the idea.

Traffic & Access Control
GDOT expressed a concern about preserving the future right-of-way for the proposed corridor, as well as driveway access to the Bypass. GDOT requested that the County permit driveways and try to limit access points in the future, while preserving the right-of-way. Barrow County explained that with the adoption of the new Unified Development Code and the update to the 2008 Comprehensive Plan, the right-of-way will be preserved and future driveways permitted.

Logical Termini
Mr. Russell McMurry, GDOT District Engineer, stated that with the federal funding, FHWA would look at the design year traffic and make sure the lane drops occurred at a traffic generator. He said the project might need to be extended along SR 211 to the intersection of Carl Cedar Hill Road/Rockwell Church Road. Ms. Karla Poshedly said that MA would investigate this possibility (noting that the determination would be made after obtaining the traffic information).

Public Involvement Process
All public involvement will need to be coordinated through OEL. A PIM/Open House will need to be held soon after the Final Concept Team Meeting, in order to receive and address the public's comments prior to submittal of the concept for approval. GDOT also discussed FHWA's desire to have alternate alignments at the PIM/Open House for the public to comment on. It was agreed that the preferred alignment and the original alignment on updated aerial would be sufficient. Barrow County will be responsible for setting up the PIM/Open House, they will need to place an ad in the paper, post signs along the proposed route, secure a location to hold the meeting, and prepare the handout. GDOT can provide templates for both the signs and handout. A PIM/Open House will be held before the Final Concept Team Meeting.

Railroad Coordination
GDOT recommended that coordination with CSX Railroad begin in the concept stage.

Roadway Profile
A conceptual profile as well as an updated conceptual construction cost estimate will need to be submitted with the concept report.

Design Considerations
The design of the tie in at SR 316 will need to be coordinated with the concept layout for the future interchange/overpass. Barrow County requested that GDOT review the intersection of SR 316 and Patrick Mill Road to see if there was anything that could be done to make it a safer intersection.

Planning Other Related Projects
GDOT recommended to Barrow County to begin the process of establishing a project for the widening of SR 211 in ARC's transportation plan, so the project can be brought into GDOT's work program in the future.

Sign-In Sheet

This is the Pre-Concept Team Meeting for projects CSSTP-0006-00(326) & CSSTP-0006-00(327) being held Wednesday, March 30, 2005 at 10am in Barrow County.

Name/Title	Company	E-Mail address	Phone number
SCOTT MACLEAN DESIGN ENGR	GDOT ROAD DESIGN	SCOTT. MACLEAN@ dot. state. ga. us	4-656-5383
JEFF JACQUES UTILITIES ENGR	GDOT	JEFF. JACQUES@ dot. state. ga. us	(770) 718-5031
ROBBY OLIVER	GDOT UTILIES	ROBBY. OLIVER@ "	(770) 532-5510
Lisa Favors Environmental	GDOT/OEI	Lisa. Favors@ DOT. State. ga. us	(4) 699-6883
Keith Lee Chief Administration	Barrow County	Klee@barrowga.org	770-307-3506
Russell McMurry GDOT-Dist. Eng.	GDOT	russell. mcmurry@ dot. state. ga. us	770-532-5526
Karla Poshedly Concept & ~~Moreland Altobelli~~ Traffic Design	Moreland Altobelli	kposhedly@ maai. net	770-263-5945
CHRIS PARYPINSKI PROJECT MANAGER	MORELAND ALTOBELLI	chris. parypinski@ gwinnettcounty. com	678) 728-9050
Doug Garrison	Barrow Co. Ch.	dgarrison@barrowga.org	770-307-3010
RANDALL C. DAVIS	GDOT	RANDALL. DAVIS@ DOT. STATE. GA. US	770-339-2308
BARRY EDGAR	CITY OF WINDER	BEDGAR@CITYOF WINDER. COM	678. 425. 6812
ERNIE GRAHAM	CITY OF WINDER	EGRAHAM@ CITYOFWINDER. COM	770 867-3106
MICHAEL FISCHER	BARROW COUNTY	MFISCHER@BARROWGA. ORG	770 867-7414
Neil Kautner	GDOT, Gainesville	nkautner@dot. state. ga. us	770-532-552[illegible]
MIKE DAVIDSON (PM)	GDOT, ROAD DESIGN	mike. davidson@dot. state. ga. us	(404) 656-5383

Sign-In Sheet

This is the Pre-Concept Team Meeting for projects CSSTP-0006-00(326) & CSSTP-0006-00(327) being held Wednesday, March 30, 2005 at 10am in Barrow County.

Name/Title	Company	E-Mail address	Phone number
Roger Wehunt	Barrow co.		770-867-5852
DARRELL GREESON	" " ENGINEERING		770-867-066

Minutes of Final Concept Team Meeting
September 27, 2005, 10:00 A.M. GDOT District Area Office
West Winder Bypass
Project Number: CSSTP-0006-00 (326) & (327)
P.I. Numbers: 0006326 & 0006327
Barrow County

A list of the attendees is attached.

Mr. Stanley Hill, Georgia Department of Transportation (GDOT) Road Design Project Manager, began the meeting by asking everyone to introduce him or herself and to sign the attendance sheet. Mr. Hill stated that this was a concept team meeting on a project that is made up of two separate programmed projects. He stated the project numbers and gave a brief description of the termini of each project being discussed. There was a brief discussion concerning whether ARC was notified by Barrow County of their desire to have the West Winder Bypass redefined under one project number. Barrow County did acknowledge that they have been in contact with ARC and the GDOT District Office to have this project redefined, programmed and modeled in the 2015 ARC planning model for Barrow County.

Mr. Hill then stated that the functional classification of the West Winder Bypass would be a rural major arterial. He then introduced Ms. Karla Poshedly of Moreland Altobelli Associates to describe and state the need and purpose of the project. Ms. Poshedly stated that the need for the project is to provide a bypass route on the west side of the city of Winder from SR 316 to SR 211 and to construct a grade-separated railroad crossing at the intersection of the West Winder Bypass and SR 8. She then stated that the purpose is to alleviate the percentage of trucks utilizing minor arterial routes and to reduce congestion and accident rates along Patrick Mill Road, SR 8, SR 211 and Pearl Pentecost Road. Ms. Poshedly continued with a brief presentation of the traffic patterns, land use developments and crash data that lead to establishing the need and purpose of the project.

Mr. Hill stated that the West Winder Bypass is projected to have 18,100 vehicles per day (vpd) in 2009, the opening year and 26,200 vpd in the 2029 design year. He stated that the existing typical section of Patrick Mill Road is a rural 2-lane roadway with rural open-ditches. The West Winder Bypass would be designed as a 4-lane divided roadway with a 24-foot median, rural paved shoulders and a 45 mph design speed.

Mr. Hill then called on Mr. Chris Parypinski of Moreland Altobelli Associates to describe the alignment of the proposed West Winder Bypass. He described the project as beginning with the widening of Patrick Mill Road from Tom Miller Road to approximately 1,000 feet north of Burson Maddox Road. The roadway would continue north on new location, bridge over SR 8, the CSX railroad track and Bankhead Highway, cross Pearl Pentecost Road and connect to SR 211. The project would also include connector roadways from the West Winder Bypass to SR 8 and to Bankhead Highway. He then described and named the major intersections of the project and described the typical section.

Mr. Parypinski then described the major structures on the project. He stated that the project would contain two culvert extensions, a new culvert on the realigned Fred Kilcrease Road, a bridge over the railroad and a new culvert near Pearl Pentecost Road.

Mr. Parypinski then continued to describe the project alignment and discuss features of the alignment. He stated the following project features:

- Two eastbound to northbound left turn lanes would be constructed on SR 316 at the West Winder Bypass because of the high volume of left turning vehicles projected for this intersection. He acknowledged that this intersection is planned to be reconstructed as an interchange in the future.
- The roadways of Fred Kilcrease Road and Bill Rutledge Road would be realigned across from each other. A traffic signal is proposed at this future intersection.
- Burson Maddox Road would be realigned to intersect with the West Winder Bypass at a 90-degree angle.
- The West Winder Bypass continues onto new location approximately 1,000 feet north of Burson Maddox Road to avoid impacting churches and potentially eligible historic resources.
- The alignment would cross the railroad and continue north behind the 84 Lumber Company property.
- The alignment would cross a power line easement, which accounts for a portion of the utility relocation costs estimated for the project.
- The West Winder Bypass would cross over at a realigned section of Pearl Pentecost Road.
- There is a location near the beginning of the project where Colonial pipeline would have to be relocated due to the increase in width and elevation of the roadbed, and would account for the bulk of the utility relocation costs.
- Right turn lanes will be constructed at all major intersections and driveways.
- A portion of Tom Miller Road would be widened in order to receive double left turns from the West Winder Bypass. The reason there is a high volume of left turning vehicles at the intersection of Tom Miller Road is because there are three Barrow County schools located off Tom Miller Road.
- The future SR 316 Interchange would be offset to the east from the existing Patrick Mill Road and the West Winder Bypass would be constructed under SR 316. The ramps would have to be construction staged to keep traffic open to the West Winder Bypass.

Mr. Parypinski then answered questions about the project:

Mr. Russell McMurry asked what is the time frame for the construction of the SR 316 interchange? And do we know what the level of service of the intersection at SR 316 will be the opening year of the West Winder Bypass? *Mr Parypinski said that the SR 316 interchange was in long range planning. Ms. Poshedly said that the intersection would operate at level of service "F" in the design year and that she had not evaluated the 2009 opening year at this intersection.*

Mr. McMurry suggested that a preliminary layout of the interchange be done in order to determine the required right-of-way for the interchange. He said that the future interchange right-of-way should be shown on the concept layout prepared for the Public Information Meeting of the West Winder Bypass. He also proposed that early acquisition of right-of-way be done when the right-of-way for West Winder Bypass is purchased.

Mr. McMurry asked if the potentially eligible historic resource near the intersection of SR 316 would be impacted by the interchange right-of-way? *Mr Parypinski said that environmental impacts of the interchange would have to be determined by the conceptual layout of the interchange.*

GDOT asked if median spacing was adequate between median openings? And what is the distance between Tom Miller Road and SR 316? *Mr. Parypinski said that the median openings would be designed according to GDOT policy guidelines. He stated that Tom Miller Road is approximately 900 feet south of SR 316. He also stated that traffic signal warrants studies would be conducted to determine if traffic signals should be installed at intersections that are not currently controlled by a traffic signal.*

GDOT asked if there would be limited access along the new location section of the project? *Mr. Parypinski stated that there would be no limited access and that access would be by permit throughout the entire length of the project. He said that 2,500 feet would probably be the maximum distance between median openings in order to provide U-turn bays.*

GDOT asked if the concept layout shown would be the PIM displays? *Ms. Poshedly said that these layouts would be the display layouts for the PIM. However, recommended changes to the displays would be made and reviewed before the PIM.*

GDOT asked if the radius of the intersection of Bankhead Highway and the Connector Road be increased to provide a raised concrete island to place a "Stop" sign? *Ms. Poshedly said that this would be done in preliminary and final design at this intersection and other unsignalized intersections to insure proper placement of the "Stop" signs.*

GDOT Right-of-Way Office suggested that the concept displays be revised to distinguish between potential displacements and known displacements. *Ms. Poshedly stated that this would be changed on the displays and revised in the concept report.*

GDOT asked if Patrick Mill Road pavement was going to be kept or removed completely. *Mr. Parypinski stated that this would be determined when staging plans are prepared. He said that it is not likely that much of Patrick Mill Road pavement would be able to be saved because the roadway alignment has to be shifted from side to side to avoid environmental and utility impacts..*

Mr. Hill then continued the meeting and stated that at this time, no design exceptions are anticipated. He said that there is shown in the concept report that there are 14 displacements, however, this may changed after the project is reviewed by right-of-way. Mr. Hill said that the net right-of-way costs is 7 million dollars, but that after scheduling contingencies, administrative costs and inflation costs are added, the costs of right-of-way is 24 million dollars. He said, however, the costs may be different because the County will be purchasing the right-of-way.

Mr. Hill then opened the discussion to the topic of utility relocations. Mr. Parypinski stated that Colonial Pipeline would need to be relocated due the grading depth of the pipe. Mr. McMurry suggested that we try to avoid the relocation of the pipeline.

GDOT utilities stated that the cost estimate for utility relocations seemed to be a good estimate.

Mr. Hill asked if there are any steel towers that need to be relocated that are transmission lines? *Mr. Parypinski said that there are only two wooden poles that are transmission lines and that there are no metal towers where the project crosses the utility easement. He stated that there are some relocations of service lines required on the project.*

The question was raised as to whether this project has the potential to become a state route? *The County stated that this issue would be discussed in the future.*

Mr. Hill stated that there were other alternates considered. He said that the concept report should clearly detail the reasons why the other alternates were eliminated from consideration. Mr. Parypinski described a few of the other alternates considered. Mr. Hill asked if a display could be brought to the PIM will some of the other alternates? *Ms. Poshedly said that a display of alternates would be prepared for review before the PIM.*

Mr. Hill then called on Mr. Patrick Smeeton to discuss the environmental analysis of this project. Mr. Smeeton said that an environmental screening of the project was conducted. He said that some potentially eligible historic resources were identified and some streams and wetlands. Mr. Smeeton said that more detailed environmental studies would be done and documented in a Environmental Assessment (EA). After the EA is drafted and approved, a FONSI would be prepared for final approval.

GDOT commented that a PIM should be held and letters be sent to people before conducting studies or surveys on private property.

GDOT asked if wetland mitigation would be required for this project. Mr. Smeeton said that definitely wetland mitigation would be required. Mr. Smeeton stated that a US Army Corp of Engineers Nationwide 14, 404 permit would most likely be required.

GDOT commented that good coordination is necessary to prevent environmental problems. GDOT also commented that hazardous waste sites should be identified and shown on the concept layout and concept report.

GDOT commented that at the culvert extensions, hydrology studies and structural analysis will be required to make sure that the culverts are adequate and do not need to be replaced.

Mr. Stanley Hill then stated that the project schedule is as follows:
P.I. Number 0006326 is scheduled for construction in the Year 2013
P.I. Number 0006327 is scheduled for long range
He said that these projects will need to be combined and the project schedule adjusted.

GDOT right-of-way commented that the number of months shown in the concept report for right-of-way acquisition should be changed to 24 months.

The County asked who would need to do make the change to combine the projects and move the construction dates up. GDOT planning said that ARC has already been notified of the change.

GDOT planning said that they would check with ARC to make sure that the project has been modeled for 4 lanes in the Year 2015 design model.

Mr. Hill then opened the meeting to further questions and comments by all attendees.

The County commented that the West Winder Bypass is an important project for the County. They said it would be the biggest project undertaken by Barrow County.

The City of Winder said that the project is very important to the City and that the City would do all that they can to see the project move forward.

Engineering Services could not attend the meeting but had notified Mr. Hill to say that the number of years of inflation in the cost estimate should be reduced to three years. Engineering Services also commented that a Value Engineering study might be required for this project.

District Preconstruction commented that the taper of the West Winder Bypass at the SR 211 connection should not be tapered in the curve. It would be better to carry the full lane width through the curve and tie to the existing SR 211 before tapering to two lanes.

Traffic Operations requested that the right-of-way at intersections be sufficient for strain poles, and that radius sizes be increased to allow for raised islands for pedestrian safety.

Planning said that bike or pedestrian modes should be considered for this project due to the multi-modal plan that is under study in the area.

The City of Winder utilities said that this project might require the relocation and/or upgrade of water lines for fire protection of industries in the area.

Mr. Stanley Hill commented that constructability would need to be kept in mind when developing the design plans of the project. He also commented that coordination of this project with the SR 316 interchange project would be required.

Mr. Hill asked if anyone had any other comments or questions and since there were none, he adjourned the meeting.

ATTENDANCE SIGN IN SHEET FOR CONCEPT TEAM MEETING

PROJECT NO. CSSTP-0006-00(326) & (327)

COUNTY/COUNTIES Barrow County

DATE September 27, 2005

NOTE: Everyone attending this meeting is requested to sign below. Attendees representing agencies or companie. outside DOT and desiring a copy of the minutes of this meeting are requested to print their name, email address organization, and telephone number below.

NAME	ORGANIZATION	EMAIL ADDRESS	PHONE NUMBER
Stanley Hill	GADOT ROAD DESIGN	Stanley.Hill@dot.state.ga.us.	4-463-2988
Vinesha Pegram	" "	Vinesha.Pegram@ " "	" " "
Terry McCollister	GDOT-Cons.- R/W	Terry.milligan@dot.state.ga.us	770-986-1541
Chauncey D. Elston	GDOT - OEL	chauncey.elston@dot.state.ga.us	404-699-4435
Chris Parypinski	MAAI	cparypinski@maai.net	(678) 728-9050
Pat Smeeton	MAAI	psmeeton@maai.net	770 263 5945
TERRY ENGLAND	STATE REP.	ENGLAND HOMEPORT2@alltel.net	770-867-1601
Doug Garrison	Chairman Barrow Co	dgarrison@barrowga.org	770-307-3010
Karla Poshedly	MAAI	kposhedly@maai.net	770-263-5945
Rhonda Brady	GDOT	rhonda.brady@dot.state.ga.us	770-532-5508
Danny Shook	GDOT	danny.shook@dot.state.ga.us	770-532-5563
Bob Beck	City of Winder	bbeck@cityofwinder.com	678-425-6806
TERRY DARRAGH	BARROW County	TDARRAGH@BARROWGA.ORG.	770 868-1837
DARRELL GREESON	" "	DGREESON@ " "	770-867-0664
DAVID P. BIGELOW	GA. DOT	david.bigelow@dot.state.ga.us	770-339-2308
ROBBY B. OLIVER	GA DOT UTILITIES	robby.oliver@dot.state.ga.us	770-532-5510
Neil A. Kantner	GDOT Gainesville	neil.kantner@dot.state.ga.us	770-532-5530
Russell McMurry	GDOT - Gainesville		770-532-5526
Jason Crane	GDOT - Planning	jason.crane@dot.state.ga.us	4)463-0010
RANDALL L. DAVIS	GDOT - AREA 5, D1	RANDALL.DAVIS..	770-339-2308
John D Hancock	GDOT - D1 A5	john.hancock@dot.state.ga.us	770-339-2308
Nabil Rand	GDOT-OTSAD	nabil.rand@dot.state.ga.us	404-635-8126

Utility & Railroad Companies

City of Winder Water Department
P.O Box 566
Winder, Georgia 30680
Wesley Skinner, Superintendent
Phone: 770-867-7978

City of Winder Gas Department
575 Loganville Hwy,
Winder, Georgia 30680
Wesley Skinner, Superintendent
Phone: 770-867-7978

Bellsouth
125 Reese Street
Athens, Georgia 30601
Curtis Carey
Phone: 706-353-4300

Alltel Communications
3375 Hwy, 11 North
Monroe, Georgia 30566
Angelyn Shumate
Phone: 770-267-6800

Adelphia/Comcast Cable
52 South Broad Street
Winder, Georgia 30680
Larry Jordan
Phone: 770-307-4991

Georgia Power Company
Bin No. 20020
241 Ralph McGill Blvd. N.E
Atlanta, Georgia 30308-3374
Harold Cox
Phone: 404-506-1406

Jackson E.M.C
P.O Box 38
Jefferson, Georgia 30549-0038
Mike Withrow
Phone: 706-367-6468

CSX Transportation
4901 Belfort Road 13/32 J 350
Jacksonville, Florida 32256
Lacoya Greggley
Public Improvements Engineer
Phone: 904-245-1234, 904-245-1057

Barrow County Water
Myron Garrett
233 East Broad Street
Winder, GA 30680
Phone: 770-307-3014

Colonial Pipeline
3925 Anderson Farm Road
Austell, GA 30106-1011
Mickey Elliott
Phone: 770-819-3557

Streams and Wetlands of Project Study Area

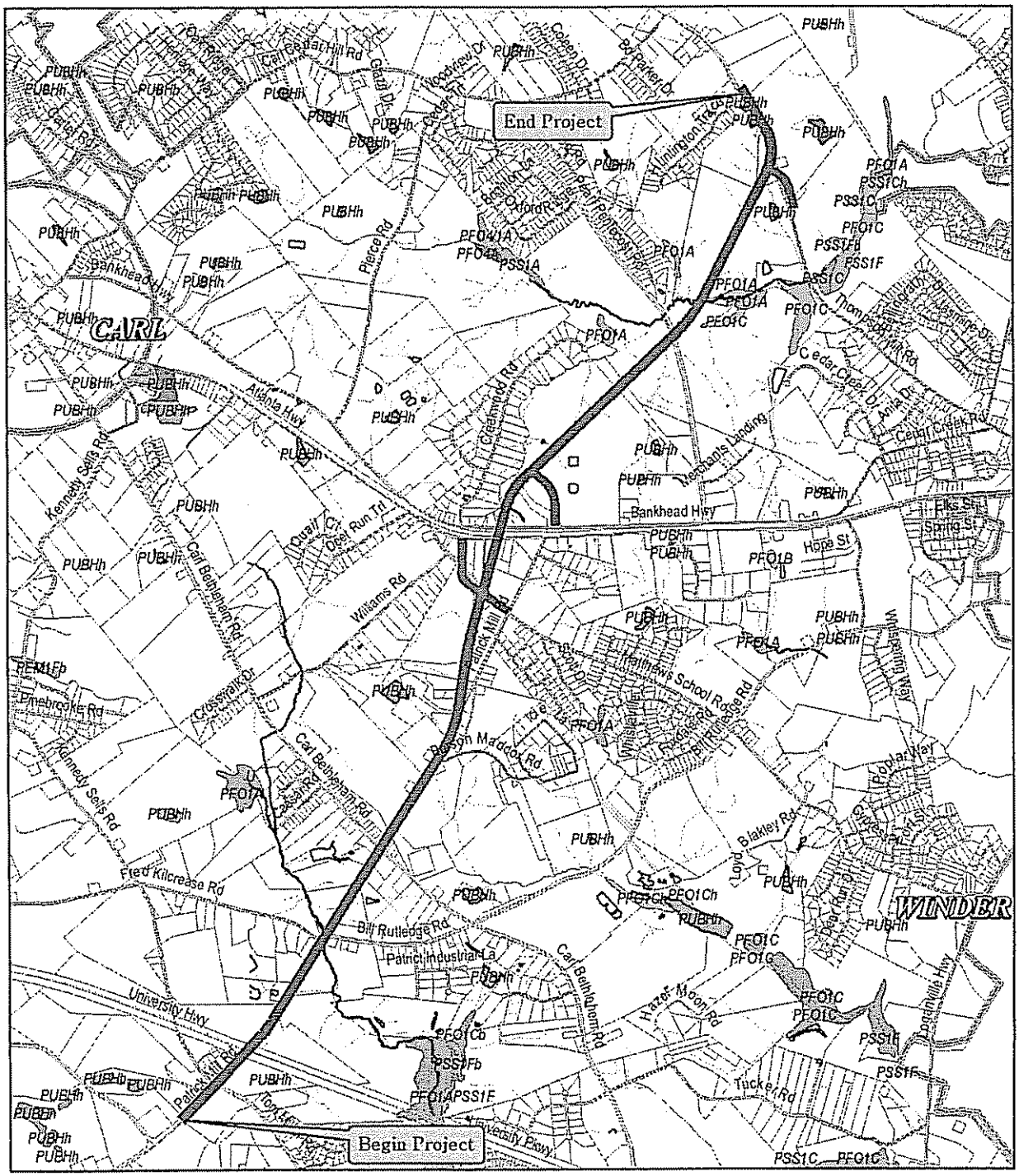

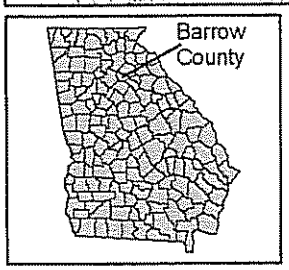

0 3,000 6,000 Feet

SCORING RESULTS AS PER TOPPS 2440-2

Project Number:	**County:**	**PI No.:**

Report Date:	**Concept By:**
	DOT Office:
☐ CONCEPT	
	Consultant:

Project Type: Choose One From Each Column			
	☐ Major ☐ Minor	☐ Urban ☐ Rural	☐ ATMS ☐ Bridge ☐ Building ☐ Interchange ☐ Intersection ☐ Interstate ☐ New Location ☐ Widening & Reconstruction ☐ Miscellaneous

FOCUS AREAS	SCORE	RESULTS
Presentation		
Judgement		
Environmental		
Right of Way		
Utility		
Constructability		
Schedule		