ORIGINAL TO GENERAL FILES

D.O.T. 66

DEPARTMENT OF TRANSPORTATION
STATE OF GEORGIA

INTERDEPARTMENT CORRESPONDENCE

FILE EDS-545(31) Jefferson County
P. I. No. 222160

OFFICE Preconstruction

DATE December 15, 1998

FROM C. Wayne Hutto, Assistant Director of Preconstruction

TO SEE DISTRIBUTION

SUBJECT PROJECT CONCEPT REPORT APPROVAL

Attached for your files is the approval for subject project.

CWH/cj

Attachment

DISTRIBUTION:

Walker Scott
Bobby Mustin
David Studstill (ATTN: Harvey Keepler)
Jerry Hobbs
Herman Griffin
Marta Rosen (ATTN: Michael Henry)
Marion Waters
Toni Dunagan
Paul Liles
Don Mills
Mike Thomas
Jim Kennerly

D.O.T. 66

DEPARTMENT OF TRANSPORTATION
STATE OF GEORGIA

INTERDEPARTMENT CORRESPONDENCE

FILE EDS-545(31) Jefferson County
P.I. No. 222160

OFFICE Preconstruction

DATE December 7, 1998

FROM Walker W. Scott, Jr., P.E., Director of Preconstruction

TO Wayne Shackelford, Commissioner

SUBJECT PROJECT CONCEPT REPORT

This project is the widening and reconstruction of US 1/SR 4 from CR 325/Old US 1 (at the Louisville Bypass) to CR 138 for a total of 9.30km. The existing roadway varies from 2 to 3 lanes with rural shoulders on 39.6m of existing right-of-way. State Route 4/US 1 is a primary north-south corridor in east Georgia and is part of the Governor's Road Improvement Program (GRIP). The existing roadway is reaching capacity and improvement will be required to maintain an acceptable level of service. The base year traffic (1997) varies from 6,500 VPD to ~~23,800~~ 10,600 JDW. VPD and the design year traffic (2017) varies from 10,400 VPD to 16,800 VPD. The posted speed varies from 70km/h to 90km/h and the design speed varies from 70km/h to 105km/h.

The proposed construction will provide four, 3.6m lanes with a 6.0m raised median from the beginning of the project to CR 304, where it transitions to four, 3.6m lanes with a 13.6m depressed grassed median to the end of the project. Approximately 20% of the existing roadway requires reconstruction. No design exceptions are required to implement this project. The southern terminus of this project ties into project EDS-545(30) Jefferson County and the northern terminus ties into project EDS-545(32) Jefferson County, with a similar typical section. Traffic will be maintained utilizing stage construction.

Environmental concerns include requiring a COE 404 permit; an Environmental Assessment will be prepared; 9 displacements - 6 residences, 1 business, and 2 mobile homes; a public hearing is required; time saving procedures are not appropriate.

The estimated costs for this project are:

	PROPOSED	APPROVED	PROG DATE	LET DATE
Construction (includes E&C and inflation)	$8,443,000	$5,130,000	2000	LR
Right-of-Way	$1,471,000	$2,056,000		
Utilities*	$1,915,000	$1,895,000		

EDS-545(31) Jefferson
December 7, 1998

*LGPA sent 3-23-92 requesting Jefferson County be responsible for utility relocation costs; city of Louisville signed LGPA for utilities 4-2-92.

The US 1 improvements are part of the GRIP. This project will be designed in English units. I recommend this project concept be approved. Will be designed in English units.

WWS:JDQ/cj

Attachment

CONCUR_____
Frank L. Danchetz, P.E., Chief Engineer

APPROVE_____
Wayne Shackelford, Commissioner

DEPARTMENT OF TRANSPORTATION
STATE OF GEORGIA

INTERDEPARTMENTAL CORRESPONDENCE

RECEIVED
OCT 14 1998
PRECONSTRUCTION

FILE: EDS-545(31) Jefferson
P.I. Number 222160

OFFICE: Atlanta, Georgia

DATE: October 13, 1998

FROM: Bob Mustin, Project Review Engineer DTM

TO: Wayne Hutto, Assistant Director of Pre-construction

SUBJECT: **CONCEPT REPORT**

We have reviewed the concept report submitted October 9, 1998 by the letter from David Studstill dated October 8, 1998, and have no comments.

The costs for the project are:

Construction	$6,779,000
Inflation	$ 678,000
E&C	$ 646,000
Preliminary Engineering	$ 340,000
Reimbursable Utilities	$1,915,000
Right of Way	$1,471,000

DTM

c: David Studstill

DEPARTMENT OF TRANSPORTATION
STATE OF GEORGIA
OFFICE OF ENVIRONMENT/LOCATION

PROJECT CONCEPT REPORT

EDS-545(31)
JEFFERSON COUNTY
P.I. NO. 222160

Federal Route No.:	1	Date of Report:	September 16, 1998
State Route No.:	4		

RECOMMENDATION FOR APPROVAL	
9/23/98	
Date	State Environmental/Location Engineer
10/13/98	
Date	Project Review Engineer
Date	State Road & Airport Design Engineer
Date	State Traffic Operations Engineer
Date	District Engineer/Tennille
Date	State Transportation Planning Administrator
Date	State Transportation Programming Engineer

DEPARTMENT OF TRANSPORTATION
STATE OF GEORGIA
INTERDEPARTMENTAL CORRESPONDENCE

FILE EDS-545(31) Jefferson County
P.I. No. 222160

OFFICE Environment/Location
DATE October 8, 1998

RECEIVED
OCT 14 1998
PRECONSTRUCTION

DES

FROM David E. Studstill, P.E., State Environment/Location Engineer

TO C. Wayne Hutto, Asst. Preconstruction Director

SUBJECT Concept Report - **US 1/SR 4 Improvements in Jefferson County**

In accordance with the Plan Development Process, the concept report for the above project is attached for your review and processing.

DES/KET

Attachment

Distribution: Bobby Mustin
James Kennerly
Marion Waters
Mike Thomas/Tennille District
Toni Dunagan
Herman Griffin

DEPARTMENT OF TRANSPORTATION
STATE OF GEORGIA
OFFICE OF ENVIRONMENT/LOCATION

PROJECT CONCEPT REPORT

EDS-545(31)
JEFFERSON COUNTY
P.I. NO. 222160

Federal Route No.: 1 **Date of Report:** September 16, 1998

State Route No.: 4

RECOMMENDATION FOR APPROVAL	
9/23/98	
Date	State Environmental/Location Engineer
Date	Project Review Engineer
Date	State Road & Airport Design Engineer
Date	State Traffic Operations Engineer
Date	District Engineer/Tennille
Date	State Transportation Planning Administrator
Date	State Transportation Programming Engineer

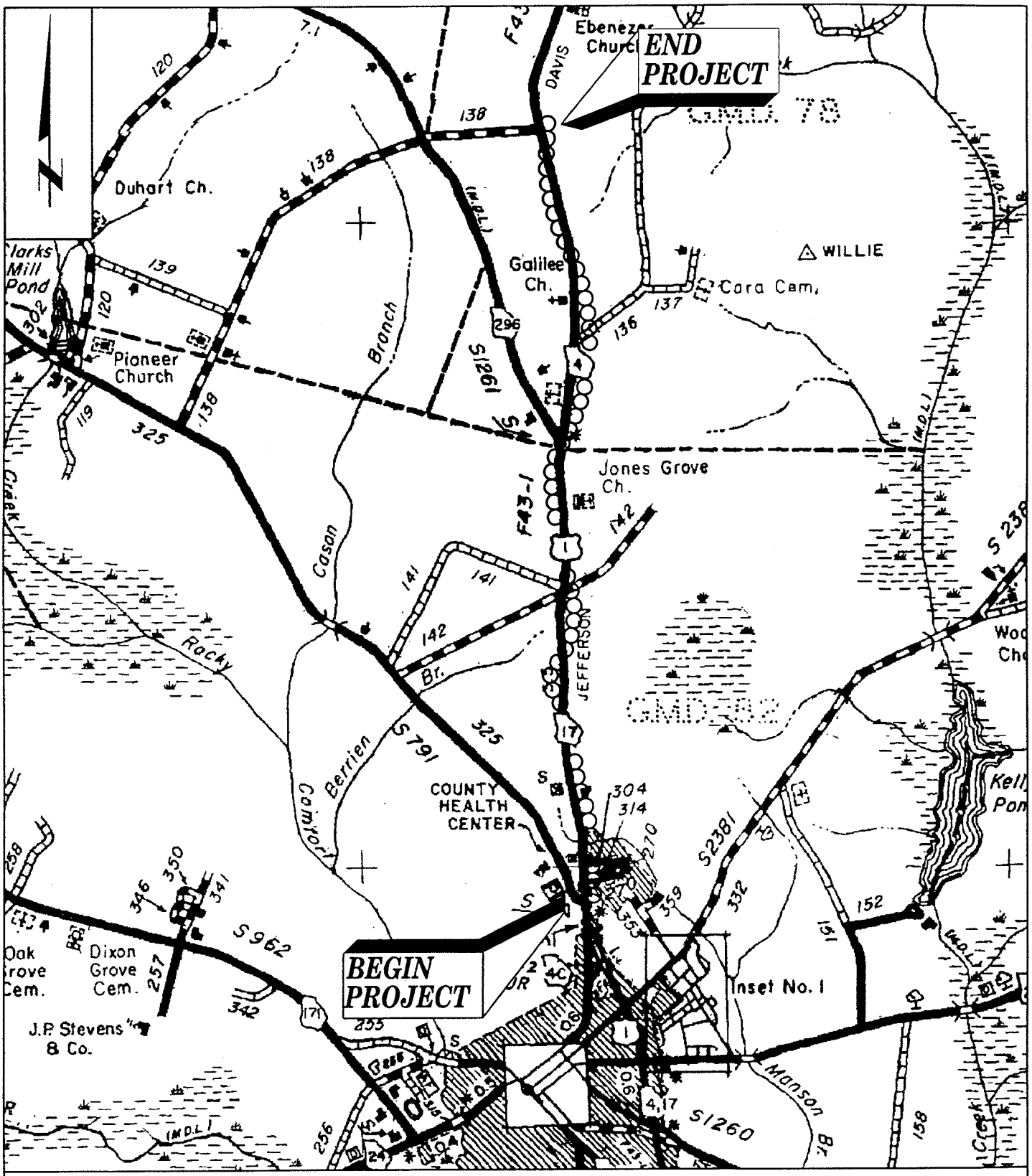

0 1 2

SCALE IN MILES

LOCATION

STRIPMAP

EDS-545(31)
US-1 IMPROVEMENTS
JEFFERSON COUNTY
P.I.# 222160

SOURCE: GENERAL HIGHWAY MAP, JEFFERSON CO., GEORGIA
PREPARED BY THE GEORGIA DEPARTMENT OF TRANSPORTATION, 1990

AUGUST 27, 1998

PROJECT CONCEPT REPORT

PROJECT NUMBER: EDS-545(31), Jefferson County

PROJECT LOCATION AND DESCRIPTION

Project EDS-545(31) in Jefferson County is proposed to improve U.S. 1 from CR 325/Old US 1, near the north end of the Louisville Bypass, to CR 138 in Jefferson County. From the beginning of the project US 1 would be widened on the east side to four lanes with a 6.0 m raised median. The widening would continue to just north of CR 304, where the typical section would change to four lanes with a 13.6 m grassed median, then continue approximately 1.6 km. At that point, the widening would shift to the west side to avoid a historic resource then shift back to the east side to avoid another resource at CR 142. Just north of CR 142 the widening would shift to the west side and continue to just south of SR 296, then shift back to the east side to approximately 0.8 km north of CR 136. From there, the proposed widening would shift to the west side for approximately 1.1 km, then shift back to the east side to end the project at CR 138. The length of the project is 9.3 km.

TRAFFIC

CURRENT		PROJECTED	
YEAR	AADT	YEAR	AADT
1997	6500 - 10,600	2017	10,400 - 16,800

PDP CLASSIFICATION	FUNCTIONAL CLASSIFICATION
Major / Construction on Existing Location	Rural Principal Arterial

EDS-545(31) JEFFERSON COUNTY

NON-CA ( )	CA ( )	EXEMPT ( )	N/A (X)

NEED AND PURPOSE

SR 4 is a primary north-south corridor in eastern Georgia. The proposed projects, EDS-545(29), (30), (31) & (32) involves the widening and reconstruction of SR 4 from the Wadley Bypass to SR 88 in Wrens. The roadway is reaching capacity and improvements will be required to maintain an acceptable level-of-service. The project will increase the capacity and level-of-service on SR 4 by widening it from two lanes to four lanes.

The US 1/SR 4 Improvements are part of the Governor's Road Improvement Program(G.R.I.P.). G.R.I.P. was initiated in the 1980's in order to address the importance of stimulating economic growth via an improved transportation network. It identified a system of economic development highways that consist of existing primary routes, plus additional truck connector routes. The system would place 98 percent of the state's population within 20 miles of a multi-lane highway. It would provide access for oversized trucks to cities having populations between 2,000 and 5,000. Among the many benefits of such a system, areas lagging in growth would be provided greater opportunities to attract industry, business and jobs.

Georgia is anticipated to remain a growth state through the 1990's. The demands created by population and economic growth will spill over onto the non-Interstate highway systems that form a critical link for both large and small communities in the state, making highway access a prime requisite for community growth in the future. Currently, limitations on trucks restrict access for many Georgia communities, limiting economic potential. The Governor's Road Improvement Program would provide access to communities previously denied service by the larger trucks. Based on the experiences of the Georgia Department of Industry and Trade, if two cities are competing for an industry, the city closest to a four lane roadway will attract the industry in most instances.

EXISTING ROADWAY

TYPICAL SECTION:	3 - 3.6 m lanes Rural	RIGHT-OF-WAY WIDTH 39.6 m
POSTED SPEED	**MINIMUM RADIUS OF CURVE**	**MAX GRADE**
Varies 70 - 90 km/h	1746 m	1.90%
TYPICAL SECTION:	**2 - 3.6 m lanes Rural**	**RIGHT-OF-WAY WIDTH 39.6 m**
POSTED SPEED	**MINIMUM RADIUS OF CURVE**	**MAX GRADE**
90 km/h	582 m	2.30%

MAJOR STRUCTURES

FEATURES INTERSECTED/TYPE	LENGTH	WIDTH	PRIORITY RATING	SUFF. RATING
None	-	-	-	-

PROPOSED ROADWAY

LENGTH OF PROJECT: 9.3 km

TYPICAL SECTION: 4 - 3.6 m lanes w/6.0 m Raised Median/Urban

DESIGN SPEED	MINIMUM RADIUS OF CURVE		MAX. GRADE	
70 km/h	ALLOWABLE	175 m	ALLOWABLE	6.00%
	PROPOSED	3495 m	PROPOSED	1.90%

TYPICAL SECTION: 4 - 3.6 m lanes w/13.6 m Grassed Median/Urban

DESIGN SPEED	MINIMUM RADIUS OF CURVE		MAX. GRADE	
105 km/h	ALLOWABLE	455 m	ALLOWABLE	4.00%
	PROPOSED	1750 m	PROPOSED	2.30%

PROPOSED MAJOR STRUCTURES

FEATURES INTERSECTED/TYPE	LENGTH	WIDTH
None	-	-

PROPOSED RIGHT-OF-WAY

RIGHT-OF-WAY WIDTH	PARCELS IMPACTED	DISPLACEMENTS		
Varies 40 m To 76 m	Approx. 53	RES.: 6	BUS.: 1	M.H.: 2

TYPE OF ACCESS CONTROL: By Permit

COORDINATION

CONCEPT TEAM MEETING DATE:	December 13, 1995
PERMITS REQUIRED:	C.O.E. 404; Approximately 0.8 ha of wetlands would be impacted. 404 Permit will include EDS-545(29)(30)(32) for purpose of achieving logical termini.
LEVEL OF PUBLIC INVOLVEMENT:	Public Hearing
TIME SAVING PROCEDURES APPROPRIATE:	No
OTHER PROJECTS IN THE AREA:	EDS-545(21)(29)(30)(32) Jefferson County.

MISCELLANEOUS

TRAFFIC CONTROL DURING CONSTRUCTION:	Traffic to be maintained on existing roads.
LEVEL OF ENVIRONMENTAL ANALYSIS:	Environmental Assessment
ENVIRONMENTAL CONCERNS:	a. Environmental Document will include EDS-545(29)(30)(32) for purpose of achieving logical termini. b. No eligible historic resources impacted. 106 required. No 4(f) required. c. No known T & E species involved at this time. d. No known eligible arch. sites known at this time. e. No parks within project limits. f. No cemeteries within project limits. g. No stream channel changes proposed.
UNDERGROUND STORAGE TANKS:	None known; Investigation requested 1/29/96.
HAZARDOUS WASTE SITES:	None known; Investigation requested 1/29/96.

DESIGN VARIATIONS REQUESTED:

	YES	NO	UNDETERMINED
SUBST HORIZ ALIGNMENT	( )	(X)	( )
SUBST ROADWAY WIDTH	( )	(X)	( )
SUBST SHOULDER WIDTH	( )	(X)	( )
SUBST VERTICAL GRADES	( )	(X)	( )
SUBST CROSS SLOPES	( )	(X)	( )
SUBST STOPPING SIGHT DIST	( )	(X)	( )
SUBST SUPERELEV RATES	( )	(X)	( )
SUBST HORIZONTAL CLEARANCE	( )	(X)	( )
SUBST SPEED DESIGN	( )	(X)	( )
SUBST VERTICAL CLEARANCE	( )	(X)	( )
SUBST BRIDGE WIDTH	( )	(X)	( )
SUBST BR STRUCT CAPACITY	( )	(X)	( )

ALTERNATIVES CONSIDERED

1. No Build.

ESTIMATED COST

CONSTRUCTION:	$ 6,779,000	RIGHT-OF-WAY:	$ 1,471,000
E & C (10%):	678,000	ACQUIRED BY:	Not known at this time; LGPA will be requested
INFLATION:	766,000	UTILITIES:	$ 1,915,300
(2 yrs at 5% per yr):		ADJUSTED BY:	Not known at this time; LGPA will be requested
TOTAL CONS'T COST:	$ 8,223,000		

COMMENTS

1. The 404-b(1) review process has not been completed for this project. This alignment could shift.
2. Approximately 20%of the vertical alignment for the existing roadway would require reconstruction to meet the proposed design speeds.
3. This project is on the Statewide Bicycle Transportation Network.

ATTACHMENTS: Cost Estimate, Typical Sections, Team Meeting Minutes

PREPARED BY: Ken Thompson, L.E. III

PRELIMINARY COST ESTIMATE

DATE	May 27, 1998
PROJECT NAME	US 1 Improvements
PROJECT NO.	EDS-545(31), Jefferson County
P.I. NO.	222160

PROJECT DESCRIPTION: US 1 Improvements from CR 325, north of Louisville, to CR 138 in Jefferson County.

Widen 2 to 4 ln 20 med. Urban - 0.47 mi.; Widen 2 to 4 ln 44 med. - 4.09 mi.; Widen 2 to 4 ln 44 med.(Reconstr. Exist.) - 1.22 mi.

PROJECT LENGTH: 5.78 miles

TYPICAL SECTION: 4 lanes w/20' raised median and 4 lanes w/44' grassed median

EXISTING ROADWAY (IF APPLICABLE) 2 and 3 lane Rural

TRAFFIC: EXISTING Varies 6500 - 10,600 ADT in 1997 DESIGN Varies 10,400 - 16,800 ADT in 2017

( ) **FEASIBILITY STUDY** (X) **PRE-PROGRAMMING PROCESS** ( ) **PROGRAMMING PROCESS**

PROJECT COSTS

A.	**RIGHT OF WAY**		
	1. PROPERTY (LAND AND EASEMENTS)	$	216,000
	2. DISPLACEMENTS	$	596,000
	3. OTHER COSTS	$	659,000
	SUBTOTAL	$	**1,471,000**
B.	**REIMBURSABLE UTILITIES**		
	1. RAILROAD	$	
	2. TRANSMISSION LINES	$	70,000
	3. SERVICES	$	1,845,300
	SUBTOTAL	$	**1,915,300**

C. MAJOR STRUCTURES

1. WALLS	$	
2. BRIDGE STREAM CROSSINGS	$	
3. BRIDGE OVER/UNDERPASS	$	
4. BOX CULVERTS	$	
SUBTOTAL	$	- 0 -

D. GRADING AND DRAINAGE

1. EARTHWORK	$	446,000
181,750 cy U.E.; 20,200 cy Rock		
2. DRAINAGE		
a. Minor Drainage (Incl. Cross Drain Pipes and Longitudinal System)	$	338,000
b. Curb and Gutter	$	92,000
9,926 lf		
SUBTOTAL	$	876,000

E. BASE AND PAVING

1. AGGREGATE BASE	$	1,047,000
84,420 T - 12.0" GAB		
2. ASPHALT PAVING	$	2,717,000
85,750 T - 1.5" E; 2.0" B; 7.0" ACB		
3. CONCRETE PAVING	$	
4. OTHER	$	377,000
SUBTOTAL	$	4,141,000

F.	**LUMP ITEMS**		
	1. TRAFFIC CONTROL	$	52,000
	2. CLEARING AND GRUBBING	$	716,000
	151 acres		
	3. LANDSCAPING	$	143,000
	4. EROSION CONTROL	$	166,000
	5. DETOURS (INCL. TEMP. BRIDGES)	$	
	SUBTOTAL	$	**1,077,000**
G.	**MISCELLANEOUS**		
	1. SIGNING/STRIPING	$	185,000
	2. GUARDRAIL	$	43,000
	1593 lf + 22 anchors		
	3. OTHER	$	377,000
	SUBTOTAL	$	**605,000**
H.	**SPECIAL FEATURES**	$	**80,000**
	600' of side road relocations		

ESTIMATE SUMMARY

A.	RIGHT OF WAY	$	1,471,000
B.	REIMBURSABLE UTILITIES	$	1,915,300

CONSTRUCTION COST SUMMARY

C.	MAJOR STRUCTURES	$	
D.	GRADING AND DRAINAGE	$	876,000
E.	BASE AND PAVING	$	4,141,000
F.	LUMP ITEMS	$	1,077,000
G.	MISCELLANEOUS	$	605,000
H.	SPECIAL FEATURES	$	80,000

SUBTOTAL CONSTRUCTION COST	$	6,779,000
E. & C. (10%)	$	678,000
INFLATION (2 YRS. @ 5% PER YEAR)	$	766,000
TOTAL CONSTRUCTION COST	$	8,223,000

GRAND TOTAL PROJECT COST $ 11,609,300

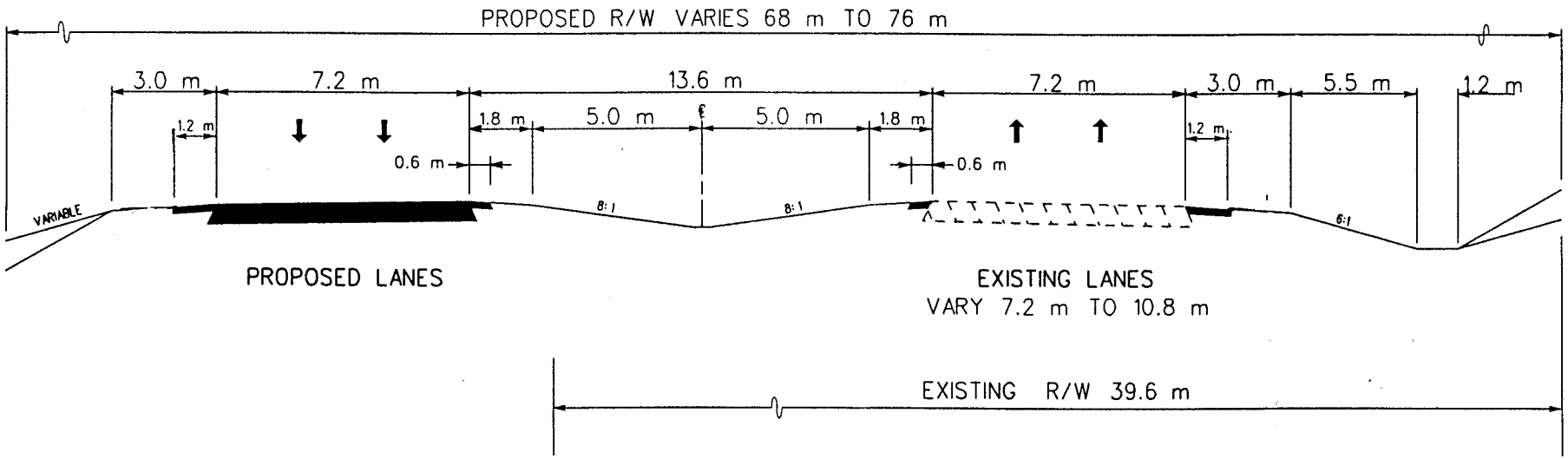

US 1 IMPROVEMENTS
EDS-545(31) JEFFERSON COUNTY
LIMITS SECTION APPLIES

From just north of CR 304 near the Louisville north city limits to CR 138 in Jefferson County

NOT TO SCALE

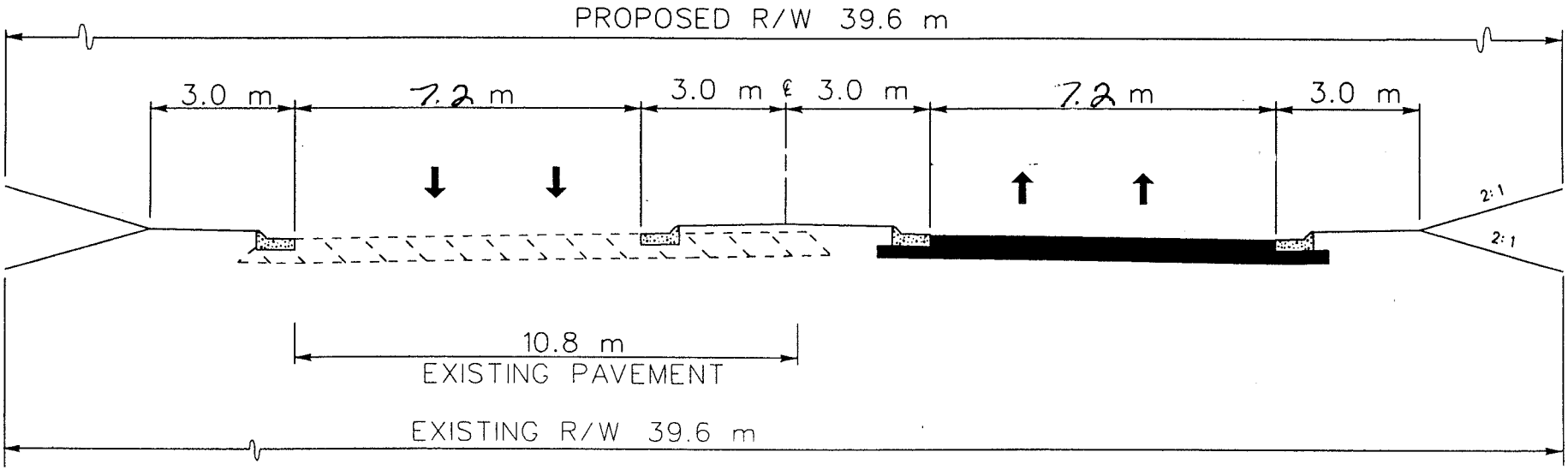

US 1 IMPROVEMENTS
EDS-545(31) JEFFERSON COUNTY
LIMITS SECTION APPLIES

From CR 325 near the north end of the Louisville Bypass to just north of CR 304 near the Louisville north city limits

NOT TO SCALE

DEPARTMENT OF TRANSPORTATION
STATE OF GEORGIA

INTERDEPARTMENTAL CORRESPONDENCE

FILE EDS-545(29)(30)(31)&(32)
Jefferson County

P.I. Nos. 222120; 222150;
222160; & 222170

OFFICE Environment/Location

DATE December 20, 1995

FROM KET
Kenneth E. Thompson, TE III, Location Engineer

TO Distribution Below

SUBJECT **CONCEPT TEAM MEETING MINUTES** - U.S. 1 Improvements in Jefferson County

Date/Time: Wednesday, December 13,1995; 10:00 A.M.
Place: Conference Room of the Office of Environment/Location
Attending: Mayor J.J. Rabun and Wayne Davis representing the City of Wrens; Mayor John Veatch and Don Rhodes from the City of Louisville; Wynder Smith, Ozzie Hannah and George Smith of Jefferson County; Sue McCuskey, Law Engineering & Environmental Services, Inc.; Luke Cousins, DOT Intermodal Programs; Kevin Hosey, Road Design; Del Clippard, Traffic Operations; Reba Scott, Programming; John Lord, Right-of-Way; Debbie Pennington, Tennille District; Jerry Hobbs, Ken Thompson, Gerald Welsh, Dalton Stevens, John Richard, Dania Aponte, Michelle Cain and Laurie Cotton of Environment/Location.

The meeting was opened by Jerry Hobbs who gave a brief description of the projects. The projects were then described in detail by Ken Thompson.

Project EDS-545(29)(30)(31)(32) in Jefferson County is proposed to improve U.S. 1 from the north end of the Wadley Bypass to the proposed relocation of S.R. 88/Fall Line Freeway in Wrens. EDS-545(29) would begin at C.R. 183 in Wadley. U.S. 1 would be widened on the west side to four lanes with a 44'(13.6m) grassed median to C.R. 248. At that point, the widening would shift to the east side of U.S. 1 and continue northward to U.S. 1 Business in Louisville, where EDS-545(30) would begin. From there, the proposed median would taper and U.S. 1 would be widened on the east side to C.R. 325. The typical section would be four lanes with a 20'(6m) raised median and curb and gutter. At C.R. 325 EDS-545(31) would begin. The widening would continue on the east side to just north of C.R. 304, where the typical section would change to four lanes with a 44'(13.6m) median, then continue approximately one mile. At that point, the widening would shift to the west side to avoid a historic resource then shift back to the east side to avoid another resource at C.R. 142. Just north of C.R. 142 the widening would shift to the west side and continue to just south of S.R. 296, then shift back to the east side and continue northward approximately 1.5 miles(2.4km). At that point, the proposed widening would shift to the west side for approximately 0.7 mile(1.1km), then shift

back to the east side and U.S.continue to C.R. 138, where EDS-545(32) would begin. The widening would continue for approximately 0.1 mile(0.2km), then extend on new location west of 1 to avoid two historic resources and a cemetery. The alignment would intersect C.R. 126 approximately 700'(213m) west of U.S. 1 and return to the existing road at C.R. 127. U.S. 1 would be widened on the west side to just south of C.R. 329, then shift to east side widening to approximately 0.2 mile(0.3km) south of C.R. 129 South. From there, the proposed median would taper and the widening would continue on the east side to approximately 0.3 mile(0.5km) north of C.R. 129 South. The typical section would be four lanes with a 20'(6m) raised median. At that point, the widening would become symmetrical and continue to C.R. 129 North, where curb and gutter would be utilized to the end of the project.

The combined lengths of the projects is 21.6 miles(34.8km). Traffic volumes are projected to range from 6000 ADT - 12,000 ADT in 1997, and 9500 ADT - 19,100 ADT in 2017. Proposed right-of-ways would vary from 130'(40m) - 137'(42m) in the urban areas, and 187'(57m) - 270'(82m) in rural areas. Existing bridges on these projects would be widened and parallel structures would be added to accommodate the proposed four lane typical section. The speed design is 55 mph(89 kph) in rural areas and 45 mph(72 kph) in urban areas. Access would be by permit along existing roadways and partial controlled on new location. Approximately 18 acres(7 ha) of possible wetlands would be impacted, and 13 houses and 6 businesses would be displaced by these projects.

After review of the concept, the following comments were made:

Local Officials

Comment: Would there be any provisions along the Louisville Bypass(U.S. 1) to accommodate trucks turning left onto S.R. 24?
Response: Left turn storage lanes would be implemented along the bypass to get turning vehicles out of the travel way at intersections and thereby increase safety along the bypass.

Comment: When would construction begin?
Response: If funding is available and the projects run according to schedule, construction is currently scheduled to begin in FY 99 for (29) & (30) and FY 2000 for (31) & (32).

Comment: The U.S. 1/Walnut St. intersection has been a problem for years. It should be signalized when U.S. 1 is widened.
Response: The level of protection required for all intersections would be studied when the project reaches the design phase. Signalization of the Walnut St. intersection would be given consideration at that time.

Comment: Assorted utilities might require relocation. There is a pumping station located on the east side of U.S. 1 just inside the north city limits of Louisville. New gas and water lines run along the east side of U.S. 1 from the pumping station to the new school at C.R. 138. Bell South

has a fibre optic cable that runs along the west side of U.S. 1 in the City of Louisville.

Comment: The Louisville-Wadley Railroad has been abandoned and has not been in operation for some time.

Road Design

Comment: Units (31) & (32) are on the list of proposed Bike Routes. The proposed width of shoulders may have to be increased to accommodate bicycle traffic.

Comment: These projects will be designed by consultants.

Intermodal Programs

Comment: Provisions have been made to extend the runway at the Louisville Airport. Vertical and horizontal clearances between proposed roadway and runway should be checked.

E.M.G.

Comment: Mapping photography for these projects will be flown next season.

E.A.B.

Comment: These will be NEPA turn-key projects. Environmental studies will be completed by consultants.

KET/kt

Distribution:
Wayne Hutto
Ronald Collins/Attn: Warren Bailey
Herman Griffin/Attn: Terry Rogers
Jim Kennerly
Toni Dunagan/Attn: Cindy Van Dyke
Marion Waters
Bobby Mustin
Dudley Ellis
David Meshberger
Larry Seabrook
Bascombe Hughes
Harvey Keepler
Charles Norris/Tennille District
Luke Cousins

DEPARTMENT OF TRANSPORTATION
STATE OF GEORGIA
OFFICE OF ENVIRONMENT/LOCATION

PROJECT CONCEPT REPORT

EDS-545(31)
JEFFERSON COUNTY
P.I. NO. 222160

Federal Route No.: 1 **Date of Report:** September 16, 1998

State Route No.: 4

RECOMMENDATION FOR APPROVAL	
9/23/98	
Date	State Environmental/Location Engineer
Date	Project Review Engineer
Date	State Road & Airport Design Engineer
Date	State Traffic Operations Engineer
Date	District Engineer/Tennille
10/16/98	
Date	State Transportation Planning Administrator
Date	State Transportation Programming Engineer

Department of Transportation
State of Georgia

INTERDEPARTMENTAL CORRESPONDENCE

RECEIVED
OCT 19 1998
PRECONSTRUCTION

File: EDS-545 (31), Jefferson Co.
P.I. No. 222160

Office: Traffic Operations
Atlanta, Georgia
Date: October 14, 1998

From: M.G. Waters, III, P.E., State Traffic Operations Engineer

To: Wayne Hutto, Assistant Director of Preconstruction

Subject: Project Concept Report Review

We have reviewed the concept report on the above project for the proposed widening of SR 4/ US 1 from the north end of the Louisville Bypass to CR 138. The existing two and three lane roadway will be widened to a four lane urban section with a 6 m raised median from the beginning of the project to CR 304, where typical section will change to four lane rural section with a 13.6 m median. While we believe this concept will improve safety and operational capacity along this section of roadway. We recommend increasing the 6 m median width to at least 8.4 m (28 ft.) at all median openings to allow the left turn lanes to be offset or aligned directly across from each other and increase sight distance for permissive left turn movements. Where no possibility of median openings exist the median could remain the proposed width. We also recommend this project provide for a conduit system to be used in the expansion of our ATMS network. Our Design Office can provide you with cost estimates and plan details. With these recommendations we find this report satisfactory for approval.

MGW:CKE

Attachment (signature page)

c: David Studstill
James Kennerly
Bob Mustin, w/ attachment
Toni Dunagan
Karl Alff
Sam Zeigler
General Files

DEPARTMENT OF TRANSPORTATION
STATE OF GEORGIA
OFFICE OF ENVIRONMENT/LOCATION

PROJECT CONCEPT REPORT

EDS-545(31)
JEFFERSON COUNTY
P.I. NO. 222160

Federal Route No.: 1 **Date of Report:** September 16, 1998

State Route No.: 4

RECOMMENDATION FOR APPROVAL	
9/23/98	
Date	State Environmental/Location Engineer
Date	Project Review Engineer
Date	State Road & Airport Design Engineer
10-15-98	
Date	State Traffic Operations Engineer
Date	District Engineer/Tennille
Date	State Transportation Planning Administrator
Date	State Transportation Programming Engineer

DEPARTMENT OF TRANSPORTATION
STATE OF GEORGIA
OFFICE OF ENVIRONMENT/LOCATION

PROJECT CONCEPT REPORT

EDS-545(31)
JEFFERSON COUNTY
P.I. NO. 222160

Federal Route No.: 1

State Route No.: 4

Date of Report: September 16, 1998

RECOMMENDATION FOR APPROVAL

9/23/98 — State Environmental/Location Engineer
Date

10/22/98 — ~~Project Review Engineer~~ Road Design
Date

Date — State Road & Airport Design Engineer

Date — State Traffic Operations Engineer

Date — District Engineer/Tennille

Date — State Transportation Planning Administrator

Date — State Transportation Programming Engineer

DEPARTMENT OF TRANSPORTATION
STATE OF GEORGIA
OFFICE OF ENVIRONMENT/LOCATION

PROJECT CONCEPT REPORT

EDS-545(31)
JEFFERSON COUNTY
P.I. NO. 222160

Federal Route No.: 1 **Date of Report:** September 16, 1998

State Route No.: 4

RECOMMENDATION FOR APPROVAL

9/23/98	
Date	State Environmental/Location Engineer
Date	Project Review Engineer
Date	State Road & Airport Design Engineer
Date	State Traffic Operations Engineer
11/2/98	Michael L. Thomas
Date	District Engineer/Tennille
Date	State Transportation Planning Administrator
Date	State Transportation Programming Engineer