Georgia Department of Transportation

TECHNICAL PROPOSAL
PACKAGE 2

February 18, 2021

PROPOSAL TO DESIGN & CONSTRUCT

The I-285 AT SR 141 (Peachtree Industrial Boulevard)

INTERCHANGE IMPROVEMENT DESIGN-BUILD PROJECT

P.I. No. 0017126, DeKalb County, GA

G.P.'s ENTERPRISES, INC.
HEAVY CIVIL CONSTRUCTION
Established 1984

Georgia Bridge & Concrete

CPL
ARCHITECTURE
ENGINEERING
PLANNING
CPLteam.com

G.P.'s Enterprises, Inc. and Georgia Bridge and Concrete, LLC (GP+GBC) as the Lead Contractor has joined with CPL Architects, Engineers, Landscape Architect and Surveyor, D.P.C. (PC) dba CPL as the Lead Designer to form a Design-Build Team that will design, construct, and deliver the I-285 at SR 141 (PIB) Interchange Improvement Project for the Georgia Department of Transportation (GDOT) on time, at low cost, with superb quality, and with improved safety and lower risk.

C.1.1. CONSTRUCTION STAGING AND TRAFFIC MANAGEMENT NARRATIVE

Peachtree Industrial Boulevard (PIB) is a main thoroughfare for traffic travelling between Buckhead/Atlanta and Norcross/Suwanee. Its intersection and interchange with I-285 enables PIB to further facilitate traffic movement in and along the Northeast quadrant of Atlanta as a principle arterial roadway. I-285 is one of the busiest interstates in Georgia and provides capacity for people and goods to reach their destinations around the Southeast. Maintaining the safety and functionality of these highways during the construction period is the primary goal of the GP+GBC/CPL design-build team.

To achieve this goal, our team will utilize a combination of best management practices within the industry. Advance notification of construction work and traffic pattern changes will be provided through signage, message boards, and public outreach. Our team will ensure that all signage and pavement markings within the project are accurate, compliant with the MUTCD, and routinely maintained. Most of the construction work, and all work which requires temporary impacts to the flow of traffic will be performed at night when traffic volumes are lower. We will maintain existing lane widths whenever possible. When construction dictates a reduction in lane widths, we will only do so to the extent necessary to complete the work. Our design-build team will also design the project to be constructed in as few stages as possible to minimize the number of major traffic pattern changes the traveling public must adjust to.

The GP+GBC/CPL design-build team anticipates three primary stages of construction for the I-285 PIB Interchange Improvement Project. Stage 1 will construct temporary alignments for the PIB Northbound and Southbound exit ramps. Flowers road will also be reconstructed and realigned into its permanent location during Stage 1. Stage 2 will include the construction of the permanent alignment for the PIB NB and SB exit ramps, the widening of the PIB exit lanes adjacent to I-285, and the new SB exit ramp bridge over PIB. Stage 3 will include the reconstruction and widening of the I-285 shoulder between the new exit ramp lane(s) and the existing I-285 westbound travel lanes.

One of the project challenges experienced in all 3 Stages of construction will be working adjacent to travel lanes with live traffic. Working next to live traffic poses challenges with delivery of materials and equipment as well as creating distractions for motorists. To address this challenge, our team will utilize temporary traffic barrier to delineate and separate the work zone from live traffic where feasible. The positive barrier will reduce driver distractions generated by the construction work. Our team will also provide acceleration and deceleration areas outside of travel lanes so that our trucks and equipment can merge into and out of traffic at reasonable speeds. This will help maintain the overall flow of traffic throughout the project.

Another overall project challenge that our team will face is insufficient area within the project limits to construct a suitable lay down area for materials and equipment. This problem will be most notable during Stage 2 and Stage 3, as we anticipate utilizing the space between Flowers Road and the existing PIB NB exit ramp for the lay down area during Stage 1. This space will not be available for such use during the latter stages, so our team will secure a parcel of property close to the project to serve as our lay down area. By storing materials and equipment not in use outside the project limits, we will minimize the visual distraction these items pose to the traveling public and reduce the likelihood occurrence of accidents.

Maintaining a safe and navigable work zone is a priority for GP+GBC/CPL design-build team. We intend to ensure the safest possible conditions for our workers, GDOT personnel, and the travelling public. By implementing the measures described above and utilizing other traffic safety practices we will achieve this goal.

C.1.2. PROJECT MANAGEMENT APPROACH

The GP+GBC/CPL team will develop and utilize a Project Management Plan (PMP) along with a set of project-specific subsidiary management plans to define and set goals, to successfully manage and provide all design, engineering, and other services, to manage the procurement and allocation of necessary resources (materials, equipment, labor, and subcontractors), and to undertake all necessary and appropriate efforts to construct the Project and maintain it during construction, to achieve Substantial Completion and Final Acceptance by the applicable Milestone Deadlines.

GP+GBC/CPL has assembled a qualified design-build team of design consultants, subconsultants, contractors, subcontractors, and suppliers with local personnel to manage, design, construct, and maintain the Project. Our team will be structured as shown on our Organization Chart, and the work will be managed and completed by the Key Personnel identified on the Organization Chart.

The GP+GBC/CPL team will develop and utilize a Quality Management Plan (QMP) to demonstrate our team's commitment to quality, to provide written procedures for quality control and quality assurance, to govern the manner we perform all aspects of the design work, produce all design documents, and perform all construction work to deliver this Project free from defects. This QMP will, will include our Design Quality Management Plan (DQMP) and our Construction Quality Management Plan (CQMP). We will use the DQMP to define the specifications, qualifications, and procedures to develop a quality design that meets the scope of the Project, that adheres to the highest standard of quality, and

that reduces the need for re-work. We will use the CQMP to define the detailed procedures, specifications, and frequencies for construction quality verification checks to ensure that the construction conforms to the requirements of the Project.

The GP+GBC/CPL team will develop and employ a Procurement Management Plan to establish processes and procedures to identify, price, select, and obtain all necessary resources to complete the Project. Our procurement efforts will include the acquisition and delivery of materials that meet or exceed GDOT Standard Specifications and which are included on GDOT's Qualified Products List (QPL), will include the identification and acquisition of necessary tools and equipment, will include the selection, negotiation, and contract execution with subcontractors, including DBE subcontractors, that are prequalified and registered with GDOT.

Maintaining the safety of our employees and for the travelling public is critical to the successful completion of this Project. The GP+GBC/CPL team will develop and utilize a Safety and Risk Management Plan to identify and foresee risks, to provide mitigation strategies, to estimate impacts, and to define responses to the risks. It will also contain a risk assessment matrix to determine the likelihood experiencing risks during the performance of the work. A subsection of this plan is the Incident and Emergency Management Plan that will identify responsibilities and procedures for responding to incidents and emergencies, including coordination and cooperation with emergency responders.

The GP+GBC/CPL team will develop and utilize a Comprehensive Environmental Protection Plan (CEPP) to identify project-specific environmental obligations, to outline our proactive approach for overseeing the work to avoid, to the extent possible, unanticipated impacts to the environment, to rapidly mitigate any such impacts that do occur, and to prevent recurrence. Our CEPP will also incorporate a project-specific Hazardous Materials Management Plan (HMMP) that outlines processes and procedures for determining the potential presence of pre-existing hazardous materials on the Project, to perform remediation and disposal of any pre-existing hazardous materials and responding to unanticipated release(s) of hazardous materials.

The GP+GBC/CPL team will develop and utilize a Utility Management Plan (UMP) to identify our Worksite Utility Coordinate Supervisor (WUCS), and to outline, our team's approach to identifying and managing utility conflicts and utility adjustments during the design and construction of the Project. Our approach will include efficient processes for communication and coordination with GDOT and with each of the utility owners impacted by the Project.

The CP+GBC/CPL team will develop and utilize a combined Work Breakdown Structure (WBS) and CPM Schedule as tools to define, establish, organize, and plan, and perform all design, construction, and other interrelated work scopes and activities to ensure all work on the Project is accomplished by the applicable Milestone Deadlines. We will update the WBS and CPM Schedule monthly to track and record progress of work scopes and activities, to allocate resources, and to identify and monitor critical activities that impact timely completion of the Project. Please see our Technical Proposal Submittal Schedule which includes a high-level summary of major design activities, major construction activities, and permit and/or environmental related restrictions associated with the Project. Additionally, this Schedule identifies and highlights detailed specific activities which define the critical path (shown in red). We have presented our Schedule in this manner to be responsive to the requirements of the RFP, and to provide the most informative Schedule within the proposal page limitations.

The GP+GBC/CPL team will develop and utilize a Transportation Management Plan (TMP) that lays out strategies and describes how our team will manage traffic through the Project to preserve and protect the safety of the travelling public and to avoid disruption, interruption, or other adverse effects on traffic flow, throughput, or level of service. Our general and specific traffic management goals are discussed and expanded upon in the Construction Staging and Traffic Management Narrative of this Proposal.

The GP+GBC/CPL team will develop and utilize a Maintenance Management Plan to identify the geographical maintenance limits on the Project, to identify and assign maintenance responsibilities, to outline the frequency of maintenance inspections, and to establish allowable maintenance response times and maintenance repair times in accordance with the Design-Build Agreement.

The GP+GBC/CPL team will develop and utilize a Cost Management Plan to outline processes and procedures to estimate and determine anticipated costs, to prepare cost budgets, to control project costs, to forecast the final overall cost to deliver the Project. Our Cost Management Plan will also outline processes, procedures, and timing for preparing and submitting monthly progress pay applications for use by GDOT in completing the Construction Reports.

The GP+GBC/CPL team will develop and utilize a Communication Management Plan to designate a member of the Project team to function as the Public Information Contact (PIC), and to establish the protocol for all Project communications. Our PIC will be the point of contact for GDOT and will coordinate and cooperate with GDOT for public information and involvement activities as required on the Project.

The GP+GBC/CPL Design-Build Team will utilize these combined subsidiary management plans to plan, manage, design, construct, and deliver the I-285 at SR 141 (PIB) Interchange Improvement Project for Substantial Completion on or before December 6th, 2023, and for Final Acceptance on or before March 3rd, 2024.

C.1.2. PROJECT MANAGEMENT APPROACH

GDOT
Georgia Department of Transportation

EXECUTIVE COMMITTEE
John Carmack, PE (GBC)
George P. Flanigan (GP)
Kevin McOmber, PE (CPL)

LEAD CONTRACTOR PROJECT MANAGER
♦ **David Culpepper, PE (GBC)**

DESIGN QUALITY MANAGEMENT
QC/QA DESIGN
Roadway - Joe Garland (CPL)
Bridge - Dan Duprey, PE (CPL)

LEAD DESIGN CONSULTANT PROJECT MANAGER
♦ Jennifer Harper, PE (CPL)

QC/QA
SAFETY DIRECTOR
Steve Hughes, (GP)
CONSTRUCTION QUALITY ASSURANCE MANAGER
♦ Roman Zhest

ENVIRONMENTAL
NEPA | ENVIRONMENTAL LEAD
Buddy Covington (KEA)*

NEPA
Buddy Covington (KEA)*
Cody Hufstetler (KEA)*

History
Laura Kviklys (KEA)*

Air & Noise
Buddy Covington (KEA)*

Ecology
Michael Eagan (KEA)*
Cody Hufstetler (KEA)*
Max Leonard (KEA)*
Kathryn Thompson (KEA)*

Archaeology
Marie Pokrant (NS)*
Patty McMahan (NS)*

Public Outreach
Buddy Covington (KEA)*
Jennifer Harper, PE (CPL)

ROADWAY
ROADWAY DESIGN LEAD
Ken Timpson, PE (CPL)

Roadway Design
Olivia Lobban, PE (CPL)
David Hastings, PE (CPL)
Ravi Vachhani, EIT (CPL)
Anna Jahns, EIT (CPL)
Lalsi Khup (CPL)
Gregory Castater (CPL)
Araceli Cortes (CPL)

Traffic
Clark Kennedy, PE, PTOE (CPL)
Jennifer Michniewicz, PE, PTOE (CPL)
David Hastings, PE (CPL)
Ravi Vachhani, EIT (CPL)

Bicycle/Pedestrian
Jennifer Harper, PE (CPL)

Hydraulic and Hydrological Studies (Roadway)
Ken Timpson, PE (CPL)
Alisha Frydrych, PE (CPL)

Utility Coordination
Zach Handac, PE (AC)*
Jesus Estrada, PE (AC)*

Survey
Ron Pate, PLS, EIT (AC)*
Andrew Goldman, PLS (AC)*
Phillip Smith, PLS (AC)*

SUE
Ron Pate, PLS, EIT (AC)*
David Young (AC)*
DeMarcus Carson (AC)*

Hazard Waste Site Assessment Studies
Russell Griebel, PG (UC)
Tim Beck, PG (UC)

Erosion Control
Ken Timpson, PE (CPL)
Alisha Frydrych, PE (CPL)

Rainfall Reporting
Zach Handac, PE (AC)*

Field Inspections for Compliance of Erosion & Sedimentation Control Device Installations
Zach Handac, PE (AC)*

STRUCTURES
BRIDGE LEAD | ENGINEER OF RECORD
♦ Brian Miller, PE, SE (CPL)

Structures Team
Matt Smullen, PE (CPL)
Greg Neddo (CPL)
Allison Lee (CPL)

Geotechnical
Santanu Sinharoy, PE (UC)
Mehdi Moazzami, PhD, PE (UC)
Henry Esterly, PG (UC)

Borings
Gable Drilling Company*

WORKSITE TRAFFIC CONTROL SUPERVISOR
Christopher Phillips (GBC)

WORKSITE EROSION CONTROL SUPERVISOR
John Andrews (GBC)

WORKSITE UTILITY CONTROL SUPERVISOR
Keary Norman (GP)

CONSTRUCTION PROJECT ENGINEER
John Morris (GP)

CONTRACTOR SUPERINTENDENT
♦ **Frankie Chambers (GBC)**

Bridge Foreman
PDA Testing Subcontractor
Barrier Wall Subcontractor
Grooving Subcontractor
Reinforcing Steel Subcontractor
SIP Decking Subcontractor

Grading Foreman
Trucking Foreman
Pipe/Drainage Foreman
Striping Subcontractor
Asphalt Pavements Subcontractor
Guardrail Subcontractor

TEAM
GP - G.P.'S Enterprises, Inc.
GBC - Georgia Bridge & Concrete, LLC
CPL - CPL Architects, Engineers, Landscape Architect and Surveyor, DPC (PC)
AC - Accura Engineering and Consulting Services, Inc. *
KEA - Kennedy Engineering & Associates Group, LLC *
NS - New South Associates, Inc. *
UC - United Consulting, LLC

* DBE
♦ KEY PERSONNEL - Resumes included in submission

CPL ARCHITECTURE ENGINEERING PLANNING CPLteam.com

G.P.'s ENTERPRISES, INC. HEAVY CIVIL CONSTRUCTION Established 1984

Georgia Bridge & Concrete

Activity ID	Activity Name	Original Duration	Early Start	Early Finish
I-285 at SR 141 (Peachtree Industrial Boulevard) Interchange Improvement		725	26-Apr-21	05-Mar-24
PROJECT MILESTONES		1045	26-Apr-21	05-Mar-24
A1000	Notice to Proceed 1	0	26-Apr-21	
A1010	Notice to Proceed 2	0	25-Aug-21	
A1020	Notice to Proceed 3	0		21-Feb-22
A1025	Plantation Pipeline Work Restriction Date (02/28/2022)	0	01-Mar-22	
A1030	Substantial Completion	0		06-Dec-23
A1040	Final Acceptance	0		05-Mar-24
PROJECT MANAGEMENT SUBMITTALS		91	26-Apr-21	23-Aug-21
QUALITY MANAGEMENT PLANS		53	26-Apr-21	17-Jun-21
DESIGN QUALITY MANAGEMENT		39	26-Apr-21	03-Jun-21
B1000	Design Quality Management Plan	39	26-Apr-21	03-Jun-21
CONSTRUCTION QUALITY MANAGEMENT		53	26-Apr-21	17-Jun-21
B1010	Construction Quality Management Plan	53	26-Apr-21	17-Jun-21
PROJECT MANAGEMENT PLANS		91	26-Apr-21	23-Aug-21
UTILITY EMERGENCY RESPONSE PLAN		68	26-Apr-21	02-Jul-21
B1020	Utility Emergency Response Plan	68	26-Apr-21	02-Jul-21
TRANSPORTATION MANAGEMENT PLAN		62	26-Apr-21	16-Jul-21
B1030	Transportation Management Plan	62	26-Apr-21	16-Jul-21
SAFETY PLAN		31	26-Apr-21	03-Jun-21
B1040	Safety Plan	31	26-Apr-21	03-Jun-21
COMPREHENSIVE ENVIRONMENTAL PROTECTION PLAN		53	26-Apr-21	02-Jul-21
B1050	Comprehensive Environmental Protection Plan	53	26-Apr-21	02-Jul-21
HAZARDOUS MATERIALS MANAGEMENT PLAN		63	26-Apr-21	17-Jul-21
B1060	Hazardous Materials Management Plan	63	26-Apr-21	17-Jul-21
PROJECT SCHEDULES		91	26-Apr-21	23-Aug-21
B1070	Project Schedules	91	26-Apr-21	23-Aug-21
DESIGN & PERMITTING		209	26-Apr-21	21-Feb-22
UTILITY RELOCATION		209	26-Apr-21	20-Feb-22
A1410	Notice Award Letter to Utilities, Prepare & Submit to Utilities	1	26-Apr-21	26-Apr-21
A1430	Conduct Utility Kick Off Meeting	1	02-May-21	02-May-21
A1453	Bellsouth/AT&T Utility Relocation - Design	90	03-May-21	31-Jul-21
A1480	Utility Letter 2, Prepare & Submit to Utilities	4	01-Aug-21	04-Aug-21
A1490	Utility Letter 2, Utility Owner 1st Review & Acceptance	90	05-Aug-21	02-Nov-21
A1500	Final Utility Plans and Utility Letter 6, Prepare & Submit to GDOT	10	03-Nov-21	12-Nov-21
A1510	Preliminary Utility Status - Letter 6 (GDOT Review)	10	13-Nov-21	22-Nov-21
A1520	Relocated Utility Plans/Agreements (GDOT Review)	22	23-Nov-21	14-Dec-21
A1530	Relocated Utility Plans/Agreements Utility Owner	60	15-Dec-21	12-Feb-22
A1540	Prepare Final RFC Utility Plans	7	13-Feb-22	19-Feb-22
A1550	Final Utility Plans - RFC	1	20-Feb-22	20-Feb-22
B1080	Utility Relocation - Design	209	26-Apr-21	20-Feb-22
PERMITTING		140	26-Apr-21	27-Oct-21
NEPA CERTIFICATION		23	26-Apr-21	24-May-21
B1090	NEPA Certification	23	26-Apr-21	24-May-21
ECOLOGY REPORT AND ADDENDUM		117	25-May-21	27-Oct-21
B1100	Ecology Report & Addendum	117	25-May-21	27-Oct-21
NOISE REPORT & ADDENDUM		83	25-May-21	12-Sep-21
B1110	Noise Report & Addendum	83	25-May-21	12-Sep-21
AIR QUALITY REPORT & ADDENDUM		73	25-May-21	29-Aug-21
B1120	Air Quality Report & Addendum	73	25-May-21	29-Aug-21
NPDES		14	29-Sep-21	17-Oct-21
B1130	NPDES	14	29-Sep-21	17-Oct-21
ROADWAY DESIGN		209	26-Apr-21	21-Feb-22
SURVEY		24	26-Apr-21	25-May-21
B1140	Project Survey	24	26-Apr-21	25-May-21
DESIGN DATA BOOK		38	26-Apr-21	12-Jun-21
B1150	Design Data Book	38	26-Apr-21	12-Jun-21
CONCEPTUAL LAYOUT PLAN		17	26-Apr-21	15-May-21
B1160	Conceptual Layout Plan	17	26-Apr-21	15-May-21
PRELIMINARY DESIGN / FIELD PLAN REVIEW		54	13-Jun-21	24-Aug-21
B1170	Preliminary Design/Field Plan Review	54	13-Jun-21	24-Aug-21
FINAL ROADWAY DESIGN		117	25-Aug-21	21-Feb-22
A2010	Final Roadway Design, GDOT Issues RFC Plans	1	21-Feb-22	21-Feb-22
A3140	Final Roadway Design	117	25-Aug-21	21-Feb-22
DRAINAGE REPORT		44	25-Aug-21	22-Oct-21
B1190	Drainage Report	44	25-Aug-21	22-Oct-21
MS4		66	25-Aug-21	23-Nov-21
B1200	MS4	66	25-Aug-21	23-Nov-21
EROSION CONTROL PLANS		26	25-Aug-21	28-Sep-21
B1210	Erosion Control Plans	26	25-Aug-21	28-Sep-21

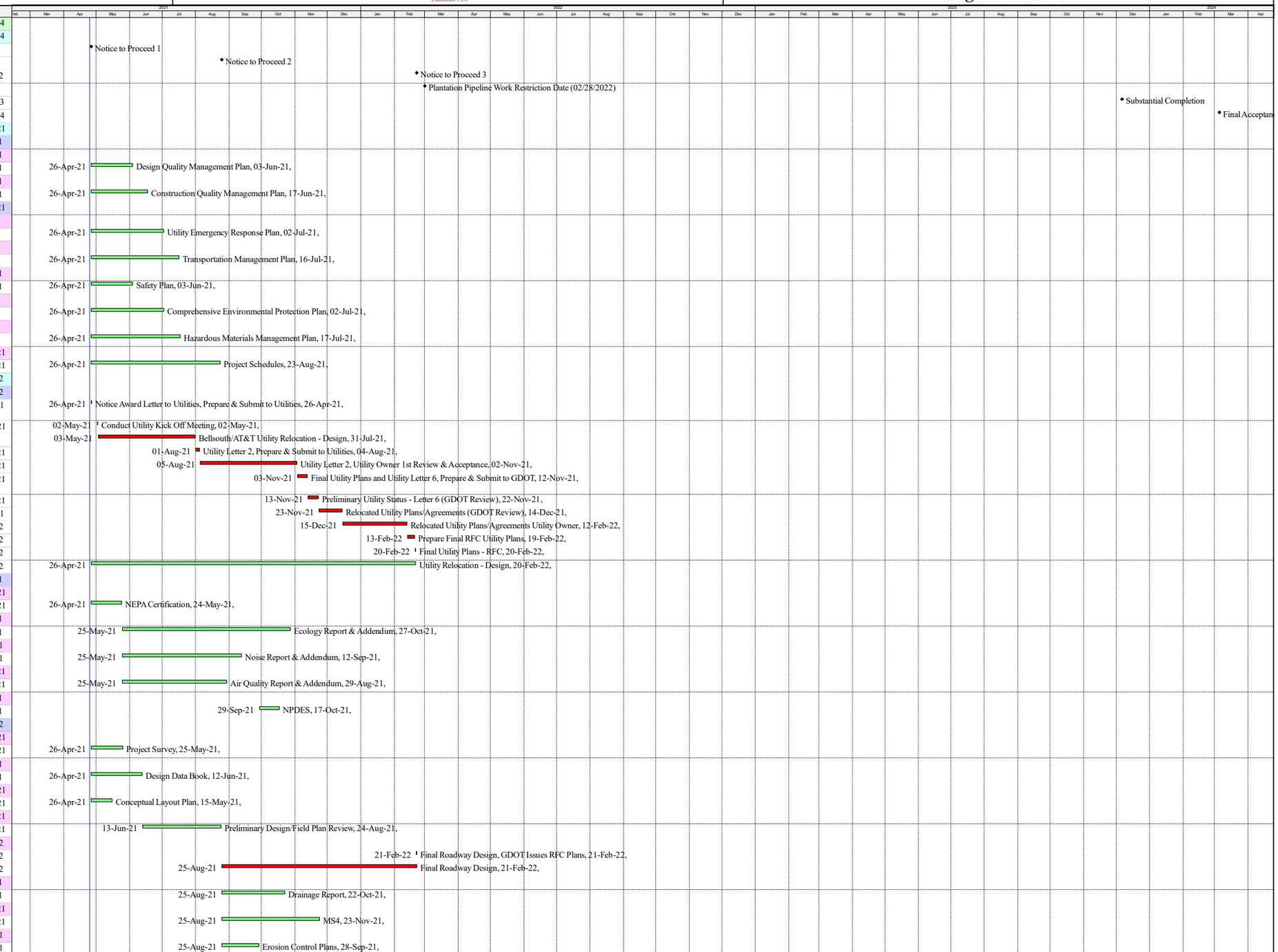

Remaining Level of Effort | (New Bar) | Actual Work
(New Bar) | Actual Level of Effort | Remaining Work

TECHNICAL PROPOSAL SUBMITTAL SCHEDULE

I-285 at SR 141 (Peachtree Industrial Boulevard) Interchange Improvement Design-Build Project
Data Date: 25-Apr-21

Activity ID	Activity Name	Original Duration	Early Start	Early Finish
	TRAFFIC SIGNAL PLANS	36	25-Aug-21	12-Oct-21
B1220	Traffic Signal Plans	36	25-Aug-21	12-Oct-21
	ITS DESIGN	41	16-May-21	10-Jul-21
B1230	ITS Design	41	16-May-21	10-Jul-21
	GEOTECHNICAL STUDIES	159	26-Apr-21	24-Nov-21
	SOIL SURVEY	63	26-Apr-21	17-Jul-21
B1240	Soil Survey	63	26-Apr-21	17-Jul-21
	WFI	69	21-Aug-21	24-Nov-21
B1250	WFI	69	21-Aug-21	24-Nov-21
	BFI	72	19-Jun-21	22-Sep-21
B1260	BFI	72	19-Jun-21	22-Sep-21
	BRIDGE DESIGN	142	16-May-21	25-Nov-21
	PRELIMINARY BRIDGE PLANS	25	16-May-21	18-Jun-21
B1270	Preliminary Bridge Design Plans	25	16-May-21	18-Jun-21
	FINAL BRIDGE PLANS	45	23-Sep-21	25-Nov-21
B1280	Final Bridge Plans	45	23-Sep-21	25-Nov-21
	CONSTRUCTION	464	22-Feb-22	06-Dec-23
	UTILITY RELOCATION	260	22-Feb-22	01-Mar-23
A3150	GA Power Distribution Utility Relocation - Construction	120	22-Feb-22	02-Aug-22
A3170	Comcast Utility Relocation - Construction	75	25-Jun-22	30-Sep-22
A3190	Bellsouth/AT&T Utility Relocation - Construction	100	26-Sep-22	01-Mar-23
B1290	Utility Relocation - Construction	260	22-Feb-22	01-Mar-23
	STAGE 1	278	22-Feb-22	27-Mar-23
	CLEARING & GRUBBING	25	22-Feb-22	28-Mar-22
B1300	Clearing & Grubbing / Initital Erosion Control	25	22-Feb-22	28-Mar-22
	TEMPORARY RAMP ALIGNMENT	48	29-Mar-22	01-Jun-22
	PIB NB RAMP	24	29-Mar-22	29-Apr-22
B1310	Construct PIB NB Ramp, Temporary Alignment	24	29-Mar-22	29-Apr-22
	PIB SB RAMP	24	02-May-22	01-Jun-22
B1320	Construct PIB SB Ramp, Temporary Alignment	24	02-May-22	01-Jun-22
	FLOWERS ROAD	229	02-May-22	27-Mar-23
A2490	Asphalt Paving, Flowers Road	8	02-Mar-23	11-Mar-23
A2500	Signs, Striping, Guardrail, Misc. Roadway Items, Flowers Road	10	13-Mar-23	27-Mar-23
B1330	Widening & Realignment of Flowers Road	229	02-May-22	27-Mar-23
	STAGE 2	382	22-Feb-22	14-Aug-23
	I-285 WIDENING	215	03-Aug-22	13-Jun-23
B1340	Widening I-285 M/L, Stage 2	215	03-Aug-22	13-Jun-23
	PIB NB RAMP FINAL ALIGNMENT	169	25-Oct-22	03-Jul-23
A2750	Construct Wall #3 & Wall #4	44	28-Mar-23	26-May-23
A2760	Earthwork, Fine Grading, PIB NB Ramp Final	6	27-May-23	03-Jun-23
A2770	Graded Aggregate Base, PIB NB Ramp Final	11	05-Jun-23	19-Jun-23
A2780	Asphalt Paving, PIB NB Ramp Final	6	20-Jun-23	27-Jun-23
A2790	Signs, Striping, Guardrail, Misc. Roadway Items, PIB NB Ramp Final	5	28-Jun-23	03-Jul-23
B1350	Construct PIB NB Ramp, Final Alignment	169	25-Oct-22	03-Jul-23
	PIB SB RAMP FINAL ALIGNMENT	382	22-Feb-22	14-Aug-23
	ROADWAY	43	20-Jun-23	14-Aug-23
B1360	Construct PIB SB Ramp, Final Alignment - Roadway, Stage 2	43	20-Jun-23	14-Aug-23
	BRIDGE	170	22-Feb-22	07-Oct-22
B1370	Construct PIB SB Ramp, Final Alignment - Bridge #01	170	22-Feb-22	07-Oct-22
	OVERHEAD SIGNS & STRUCTURES	115	13-Dec-22	05-Jun-23
B1380	Construct/Remove Overhead Sign Structures, Complete	115	13-Dec-22	05-Jun-23
	STAGE 3	114	05-Jul-23	06-Dec-23
	I-285 WIDENING/PIB SB RAMP (EAST OF BRIDGE)	77	05-Jul-23	11-Oct-23
A3020	Roadway Demoltion & Removals, I-285 M/L & PIB SB Ramp (EOB)	3	05-Jul-23	07-Jul-23
A3030	Earthwork, Cut & Fill, I-285 M/L & PIB SB Ramp (EOB)	10	10-Jul-23	20-Jul-23
A3040	Drainage, Pipe & Structures, I-285 M/L & PIB SB Ramp (EOB)	10	21-Jul-23	02-Aug-23
A3050	Construct Wall #5 @ Wall #6	21	03-Aug-23	29-Aug-23
A3060	Earthwork, Fine Grading, I-285 M/L & PIB SB Ramp (EOB)	6	30-Aug-23	06-Sep-23
A3070	Graded Aggregate Base, I-285 M/L & PIB SB Ramp (EOB)	12	07-Sep-23	22-Sep-23
A3080	Asphalt Paving, I-285 M/L & PIB SB Ramp (EOB)	10	23-Sep-23	04-Oct-23
A3090	Signs, Striping, Guardrail, Misc. Roadway Items, I-285 M/L & PIB SB Ramp (EOB)	5	05-Oct-23	11-Oct-23
B1390	Widening I-285 M/L, Stage 3 & Construct PIB SB Ramp, Final Alignment, Stage 3	77	05-Jul-23	11-Oct-23
	MILL & OVERLAY	82	15-Aug-23	06-Dec-23
A3110	Mill & Overlay I-285 M/L - Final	5	13-Oct-23	19-Oct-23
A3120	Final Project Striping	32	20-Oct-23	06-Dec-23
B1400	Mill & Overlay Limits of Construction	82	15-Aug-23	06-Dec-23
	PROJECT CLOSEOUT	90	07-Dec-23	05-Mar-24
A3270	Project Closeout	90	07-Dec-23	05-Mar-24

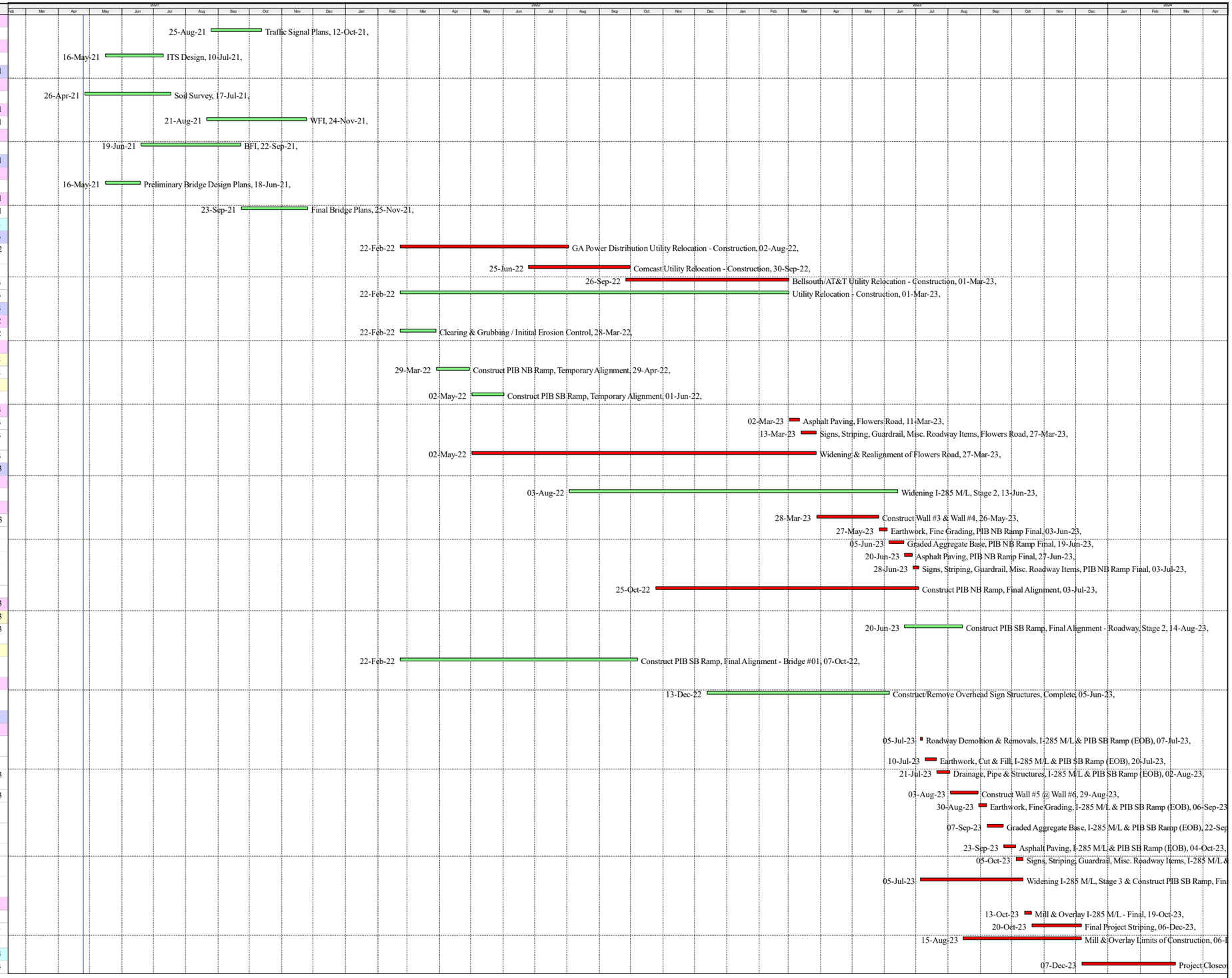

C.2. PROJECT DIFFERENCES FROM REFERENCE INFORMATION DOCUMENTS (RIDS)

RID PLANS DEVIATION - ROADWAY

COSTING PLANS	PROPOSED
Drainage	
Directed approximately 5,000 sf of additional drainage area to structure I285-1A which would result in increased pressure in the downstream system.	Added the detention pond to address additional drainage area. **See Figure 1.** • Skew outfall I285-OUT5 to provide for all to proposed ditch • Remove structure FL-11 and pipe FL-11 • Redirect structure and pipe FL-9A to drain to proposed detention pond • Remove pipe for structure FL-9A to FL-9
Structure FL-7 is not located in the true low point.	**See Figure 2** for revised locations. • Adjust location of structure FL-7 to true low point on Flowers Road • Add additional flanker inlets at low point, two structures • Shift structure I285-7 approximately 50 feet east to relieve 4,900 sf of drainage area to structure I285-1A • Add a flared end section inlet at station 516+00 left, Flowers Road to pick up offsite drainage area • Change FL-8 from 1033D to a 9031S and relocate to proposed ditch outfall
Traffic Signal	
Traffic signal supported by span wire	Traffic signal supported by mast arm. **See Figure 3** for details. • Require additional 4 steel pols with arms of 40, 45, 50 and 65 feet • Include pull boxes, directions bores, trenching conduit

RID PLANS DEVIATION - STRUCTURES

COSTING PLANS	PROPOSED
Wall No. 1	
Wall No. 1 is shown as a soldier pile wall supported by drilled piers.	Adjust slopes behind Wall No. 1 and lower overall wall height to allow for GDOT Standard Types 6-S and 6-SA. **See Figure 4.**
Bridge No. 1: I-285 over SR 141	
Span 1 consists of six (6) 63-inch Bulb Tee beams.	Revise span1 beam configuration for five (5) 63-inch Bulb Tee beams. **See Figure 5.**
Interior bent columns consist of 4 foot diameter circular columns.	Revise columns to 4 foot square columns to accommodate pile footings. **See Figure 6.**

DATE$$$ TIME$$$ $PRF8$ DGN

$USER$ $$PENTABLE$$

GDOT

P.I. No. 0017126

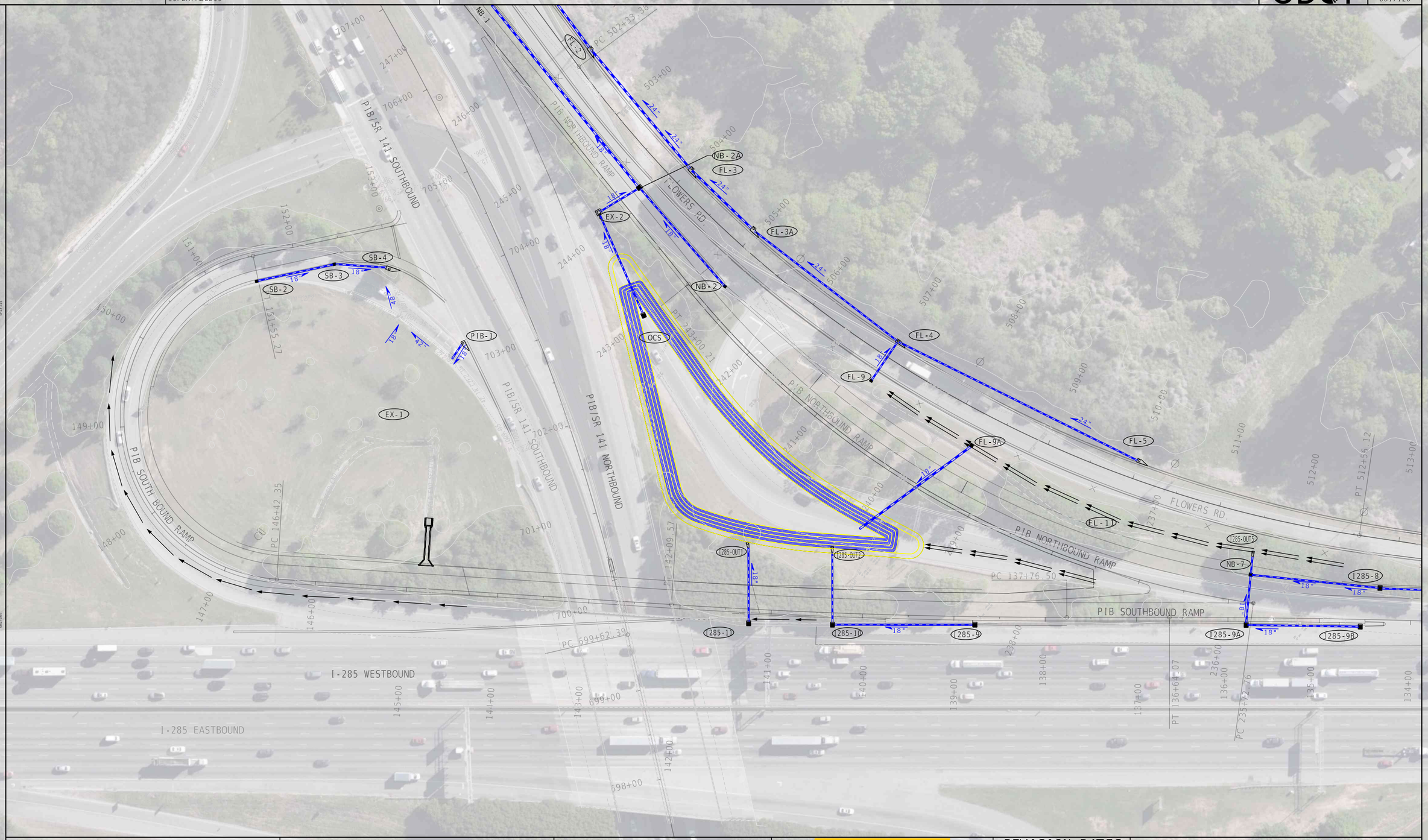

PROPERTY AND EXISTING R/W LINE	
REQUIRED R/W LINE	
CONSTRUCTION LIMITS	
EASEMENT FOR CONSTR & MAINTENANCE OF SLOPES	
EASEMENT FOR CONSTR OF SLOPES	
EASEMENT FOR CONSTR OF DRIVES	

BEGIN LIMIT OF ACCESS	BLA
END LIMIT OF ACCESS	ELA
EXISTING LIMIT OF ACCESS	
REQ'D LIMIT OF ACCESS	
EXISTING LIMIT OF ACCESS & R/W	
REQ'D LIMIT OF ACCESS & R/W	
ORANGE BARRIER FENCE	
ESA - ENV. SENSITIVE AREA	

GDOT
Georgia Department of Transportation

3011 SUTTON GATE DRIVE, SUITE 130
SUWANEE, GEORGIA 30024
TEL (800) 274-9000
FAX (770) 831-9243
www.clarkpattersonlee.com
Clark Patterson Lee
ARCHITECTURE | ENGINEERING | PLANNING

SCALE IN FEET
0 50 100 200

REVISION DATES

SPECIAL CONSTRUCTION DETAIL
DEKALB COUNTY
I-285 WB @ SR 141/PIB INTERCHANGE
DETENTION POND GRADING

CHECKED:		DATE:	
BACKCHECKED:		DATE:	
CORRECTED:		DATE:	
VERIFIED:		DATE:	

DRAWING No.

FIGURE 1

GPLN-CE
Copy 2019

© 2021 Microsoft Corporation © 2021 Maxar ©CNES (2021) Distribution Airbus DS, Earthstar Geographics SIO

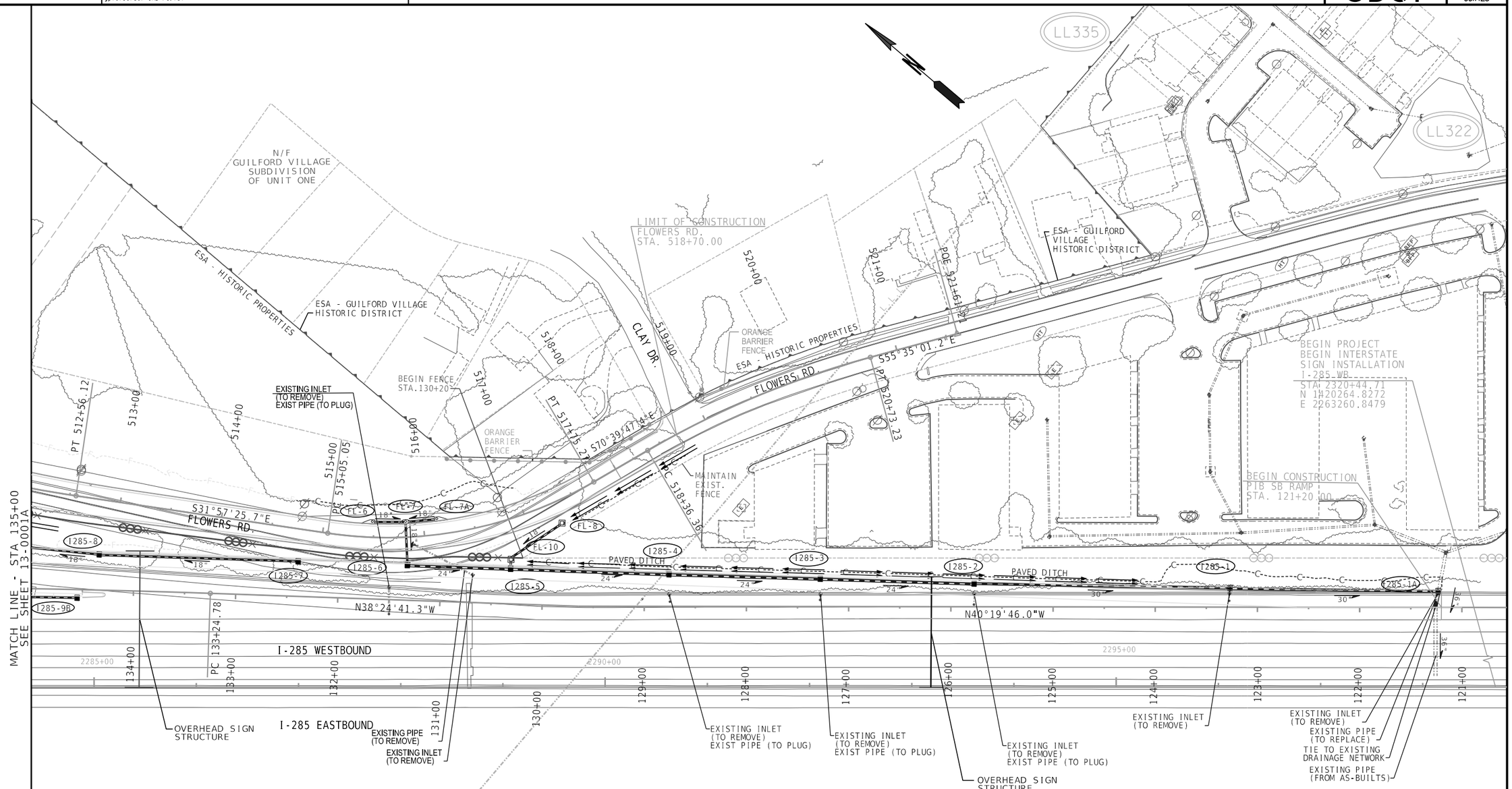

DITCH TABLE

BASELINE ALG	BEGIN STA	BEGIN OFF	END STA	END OFF	SIDE SLOPE	BOTTOM WIDTH	MATERIAL
PIB NB RAMP	239+34.57	-52.37	244+18.43	-29.97	2:1	2	RIPRAP
PIB NB RAMP	242+47.81	-107.56	244+18.43	-29.97	2:1	2	RIPRAP
PIB NB RAMP	237+76.00	49.65	240+75.00	65.00	2:1	2	RIPRAP
PIB SB RAMP	141+31.24	74.53	142+14.98	99.59	2:1	2	RIPRAP
PIB SB RAMP	140+36.47	76.39	140+38.44	126.13	2:1	2	RIPRAP
PIB SB RAMP	127+15.77	33.61	123+86.83	23.29	2:1	1	PAVED
PIB SB RAMP	127+15.77	33.61	130+29.05	43.40	2:1	1	PAVED

ESA - SEE GENERAL NOTES
'ENVIRONMENTAL RESOURCES IMPACT TABLE'
FOR CONSTRUCTION RESTRICTIONS.

PROPERTY AND EXISTING R/W LINE
REQUIRED R/W LINE
CONSTRUCTION LIMITS
EASEMENT FOR CONSTR & MAINTENANCE OF SLOPES
EASEMENT FOR CONSTR OF SLOPES
EASEMENT FOR CONSTR OF DRIVES

BEGIN LIMIT OF ACCESS.....BLA
END LIMIT OF ACCESS.....ELA
LIMIT OF ACCESS
REQ'D R/W & LIMIT OF ACCESS
ORANGE BARRIER FENCE
ESA - ENV. SENSITIVE AREA (SEE ERIT TABLE)

SCALE IN FEET
0 50 100 200

ARCHITECTURE ENGINEERING PLANNING
3011 SUTTON GATE DRIVE, SUITE 130
SUWANEE, GEORGIA 30024
TEL (800) 274-9000
FAX (770) 831-9243
www.cpiteam.com

GDOT
Georgia Department of Transportation

REVISION DATES

CONSTRUCTION PLAN
I-285 @ SR 141
EXIT RAMPS (DRAINAGE ONLY)

CHECKED: DATE:
BACKCHECKED: DATE:
CORRECTED: DATE:
VERIFIED: DATE:

DRAWING No.
FIGURE 2

PHASING DIAGRAM

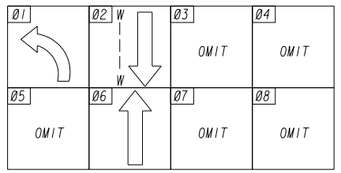

PEDESTRIAN SIGNS

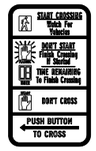

R10-3E(L)

R10-3E(R)

LED SIGNAL HEADS WITH RETRO-REFLECTIVE BACK PLATES

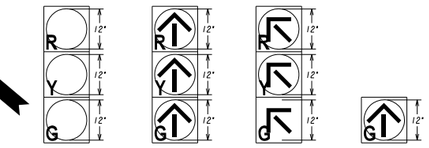

1C, 1D, 2C, 2D 2A, 2B 1A, 1B 6A, 6B, 6C

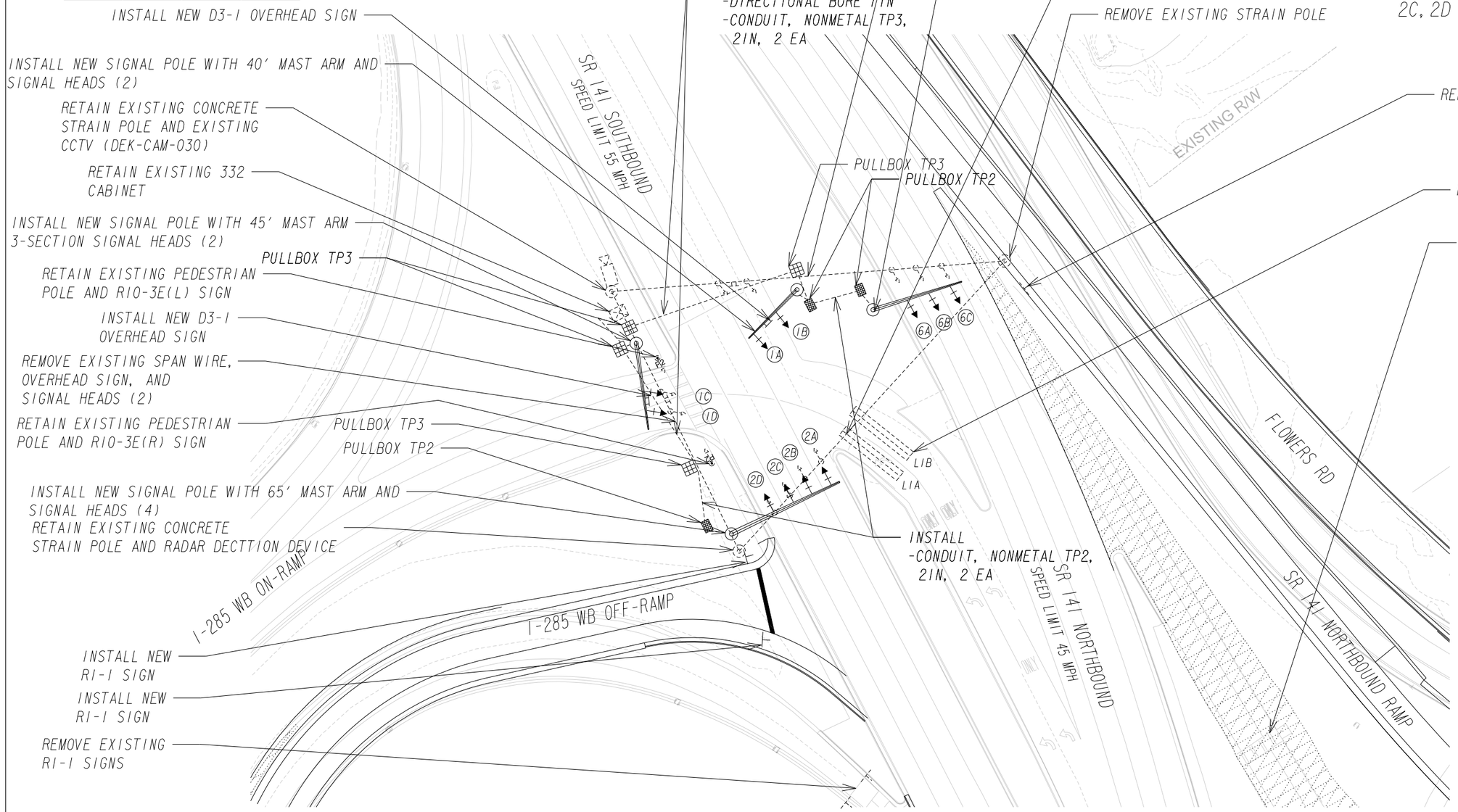

REGULATORY SIGNS

R1-1

OVERHEAD STREET NAME SIGNS

D3-1

SIGNAL LEGEND

- PROPOSED SIGNAL HEAD
- EXISTING SIGNAL HEAD
- RELOCATED SIGNAL HEAD
- PROPOSED 4-SECTION SIGNAL HEAD
- PROPOSED 5-SECTION SIGNAL HEAD
- PEDESTRIAN SIGNAL HEAD

DETECTION LEGEND

- EXISTING INDUCTIVE PRESENCE LOOP
- PROPOSED INDUCTIVE PRESENCE LOOP
- EXISTING SETBACK LOOP
- PROPOSED SETBACK LOOP
- PROPOSED RADAR
- PROPOSED VIDEO DETECTION

SCALE IN FEET

0 30 60 120

GDOT Georgia Department of Transportation

REVISION DATES

SIGNAL PLANS

AIP: SR 141 @ I-285 WB ON-RAMP

CHECKED:		DATE:	
BACKCHECKED:		DATE:	
CORRECTED:		DATE:	
VERIFIED:		DATE:	

DRAWING No.

FIGURE 3

GDOT | P.I. NO. 0017126

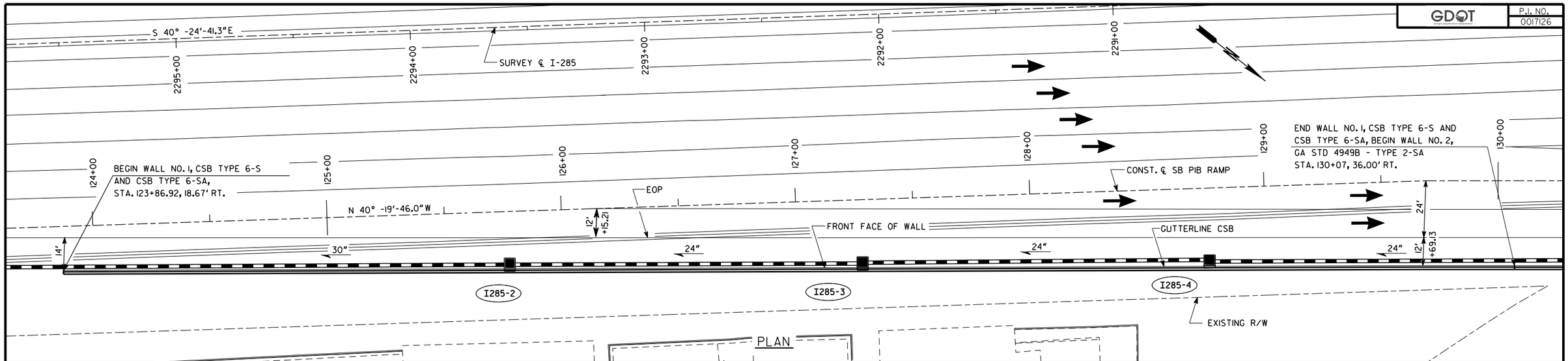

PLAN

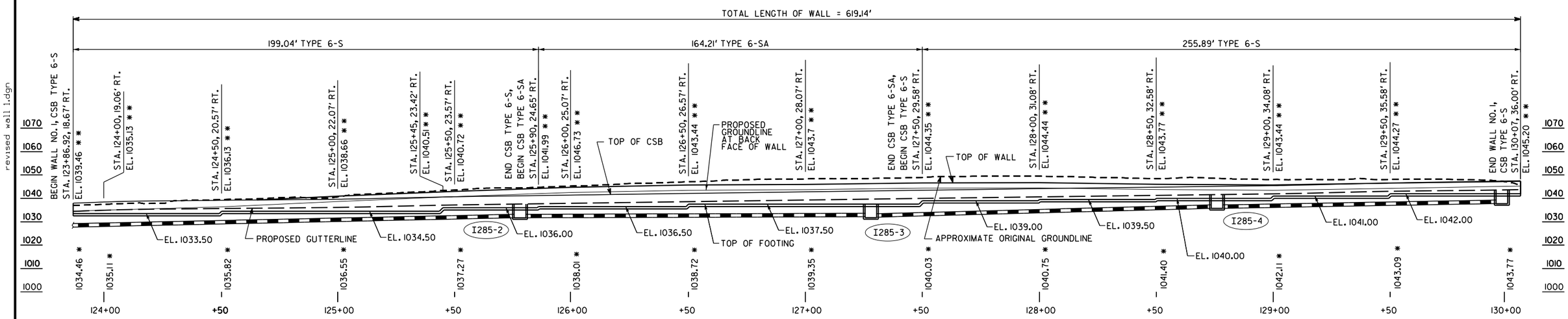

ELEVATION
(BACK FACE OF WALL SHOWN)

NOTES

1. STATIONS SHOWN ARE ALONG CONST. ℄ SB PIB RAMP. OFFSETS SHOWN ARE MEASURED TO THE GUTTERLINE OF CONCRETE SIDE BARRIER.
2. * ELEVATIONS SHOWN ARE PROPOSED FINISHED GRADE ELEVATIONS AT THE GUTTERLINE OF CONCRETE SIDE BARRIER (CSB).
3. ** ELEVATIONS SHOWN ARE PROPOSED GROUNDLINE AT BACK FACE OF WALL.
4. SEE DRAINAGE PLANS FOR DRAINAGE DETAILS.

WALL NO. 1 CONSISTS OF

CONCRETE SIDE BARRIER ---------- GA STD 4949C (05-2020)

PROPOSAL PLANS
NOT FOR CONSTRUCTION

FIGURE 4

WALL NO. 1

Clark Patterson Lee
ARCHITECTURE | ENGINEERING | PLANNING
3011 SUTTON GATE DRIVE, SUITE 130
SUWANEE, GEORGIA 30024
TEL (800) 274-9000
FAX (770) 831-9243
www.clarkpatterson.com

GEORGIA
DEPARTMENT OF TRANSPORTATION
ENGINEERING DIVISION-OFFICE OF BRIDGES AND STRUCTURES

WALL NO. 1 - PLAN AND ELEVATION
PEACHTREE INDUSTRIAL-I-285
INTERCHANGE IMPROVEMENTS

DEKALB COUNTY 0017126

SCALE : 1" = 20'-0" (UNLESS NOTED OTHERWISE) FEBRUARY 2021

BY	REVISIONS	DATE

DESIGNED | CHECKED | REVIEWED
DRAWN | DESIGN GROUP | APPROVED

1 INCH WHEN PRINTED FULL SIZE

revised wall1.dgn
12:34:32 PM
2/14/2021

GDOT | P.I. NO. 0017126

DIMENSION "D" IS MEASURED FROM TOP OF SLAB TO TOP OF BEAM AT ℄ BEARING. VARY "D" BETWEEN BEARINGS TO COMPENSATE FOR DEAD LOAD DEFLECTION AND VERTICAL CURVE. MAINTAIN A CONSTANT SLAB THICKNESS OF 8¼" BETWEEN BEAMS AND AT THE OVERHANGS.

"D" = 11¼" FOR ALL BEAMS

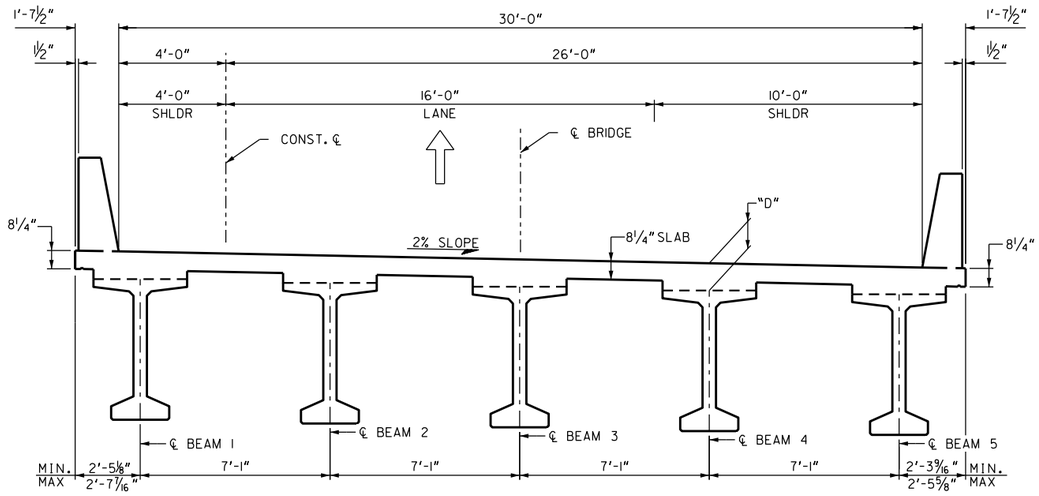

BRIDGE TYPICAL SECTION - SPAN 1

NOTE:

ALL TRANSVERSE DIMENSIONS ARE RADIAL EXCEPT FOR BEAM SPACINGS WHICH ARE NORMAL TO CL BEAM.

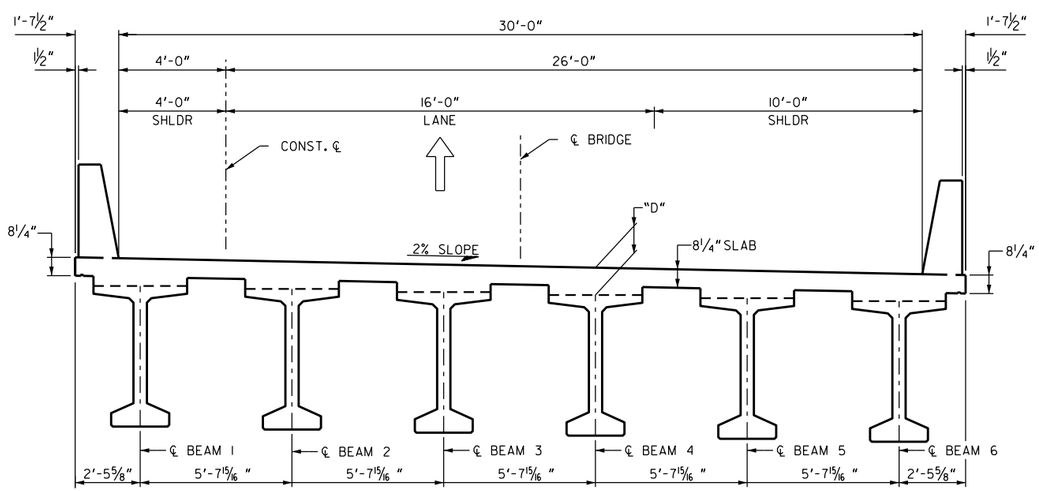

BRIDGE TYPICAL SECTION - SPAN 2

BRIDGE NO. 1

Clark Patterson Lee
ARCHITECTURE | ENGINEERING | PLANNING
3011 SUTTON GATE DRIVE, SUITE 130
SUWANEE, GEORGIA 30024
TEL (800) 274-9000
FAX (770) 831-9243
www.clarkpatterson.com

GEORGIA
DEPARTMENT OF TRANSPORTATION
ENGINEERING DIVISION-OFFICE OF BRIDGES AND STRUCTURES

PROPOSAL PLANS NOT FOR CONSTRUCTION

BY	REVISIONS	DATE

BRIDGE TYPICAL SECTIONS

I-285 @ SR 141

DEKALB COUNTY 0017126

FIGURE 5

SCALE : NONE FEBRUARY 2021

DESIGNED ____ CHECKED ____ REVIEWED ____
DRAWN ____ DESIGN GROUP ____ APPROVED ____

1 INCH WHEN PRINTED FULL SIZE

revised bridge section.dgn 12:19:37 PM 2/14/2021

GDOT | P.I. NO. 0017126

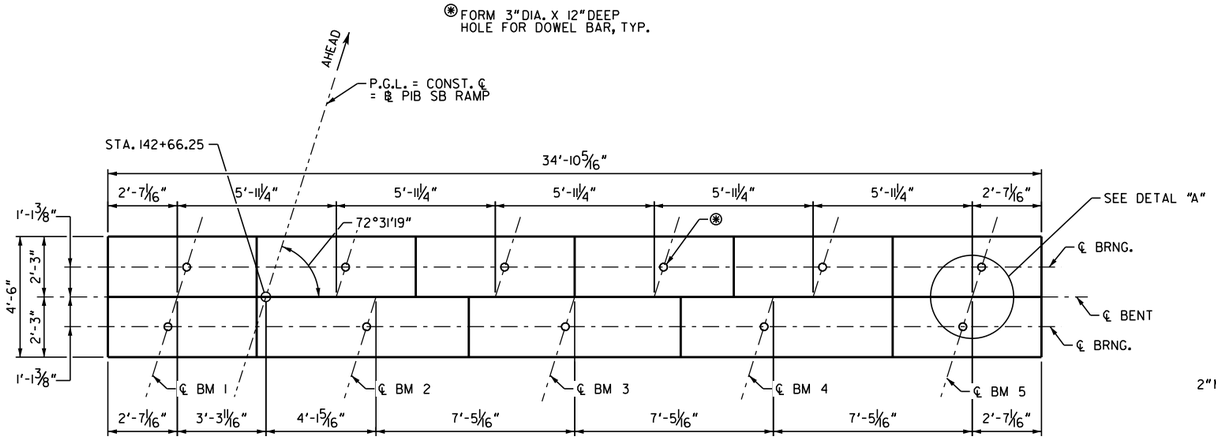

PLAN

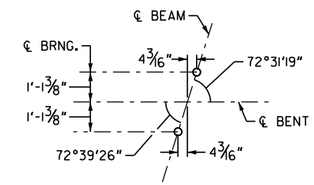

DETAIL "A"

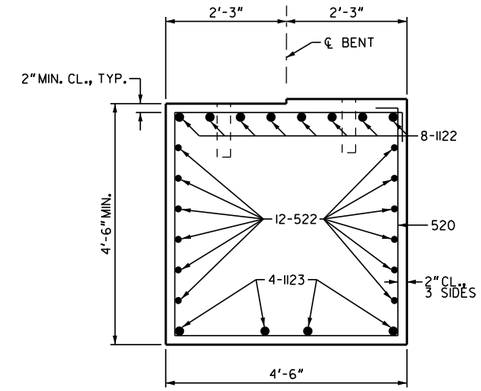

SECTION A-A
(SCALE: 3/4" = 1'-0")

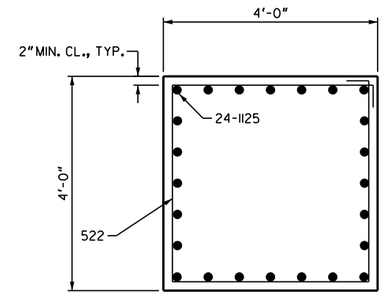

SECTION C-C
(SCALE: 3/4" = 1'-0")

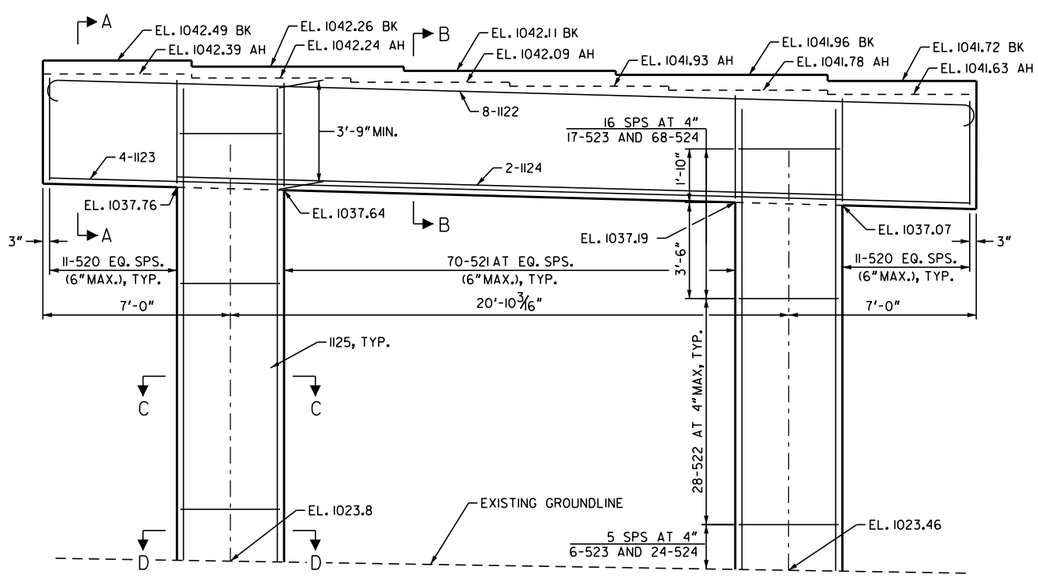

ELEVATION
(LOOKING AHEAD)

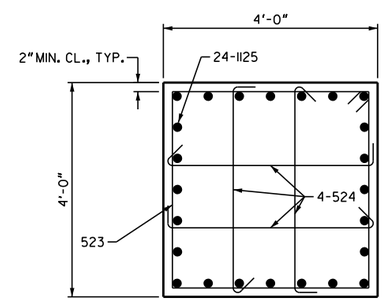

SECTION D-D
(SCALE: 3/4" = 1'-0")

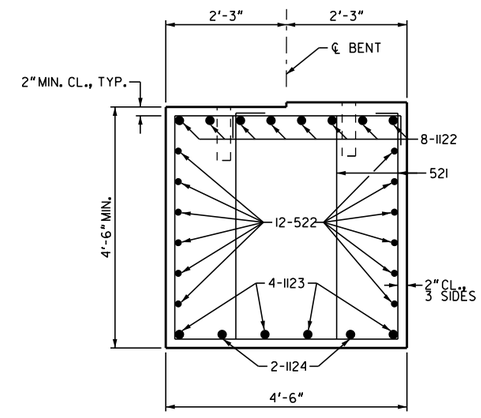

SECTION B-B
(SCALE: 3/4" = 1'-0")

SUBSTRUCTURE QUANTITIES	
ITEM	BENT 2
CU YD CLASS "AA" CONCRETE	39.81
LB BAR REINFORCEMENT STEEL	8188

BRIDGE NO. 1

Clark Patterson Lee
ARCHITECTURE | ENGINEERING | PLANNING
3011 SUTTON GATE DRIVE, SUITE 130
SUWANEE, GEORGIA 30024
TEL (800) 274-9000
FAX (770) 831-9243
www.clarkpatterson.com

GEORGIA
DEPARTMENT OF TRANSPORTATION
ENGINEERING DIVISION-OFFICE OF BRIDGES AND STRUCTURES

PROPOSAL PLANS NOT FOR CONSTRUCTION

FIGURE 6

REVISIONS | DATE | BY

INTERMEDIATE BENT 2
I-285 @ SR 141

DEKALB COUNTY 0017126

SCALE : 3/8" = 1'-0" (UNLESS NOTED OTHERWISE) FEBRUARY 2021

DESIGNED ____ CHECKED ____ REVIEWED ____
DRAWN ____ DESIGN GROUP ____ APPROVED ____

1 INCH WHEN PRINTED FULL SIZE

revised bridge column.dgn 11:14:24 AM 2/15/2021

G.P.'s
ENTERPRISES, INC.
HEAVY CIVIL CONSTRUCTION
Established 1984

Georgia
Bridge & Concrete

CPL
ARCHITECTURE
ENGINEERING
PLANNING
CPLteam.com