REQUEST FOR PROPOSALS

TO DESIGN AND CONSTRUCT

THE SR 53 WESTBOUND AT CHATTAHOOCHEE RIVER BRIDGE REPLACEMENT PROJECT

THROUGH A

DESIGN-BUILD AGREEMENT

PROJECT NUMBER
P.I. No. 0010212

INSTRUCTIONS TO PROPOSERS

GEORGIA DEPARTMENT OF TRANSPORTATION

RFP Issued: April 19, 2019

Amendment 1 issued: May 22, 2019

Proposals Due: June 14, 2019 at 11:00 AM

Georgia Department of Transportation
One Georgia Center
600 West Peachtree Street, NW
Atlanta, Georgia 30308

TABLE OF CONTENTS

SECTION 1.0 INTRODUCTION AND GENERAL PROVISIONS 1-1
1.1 Introduction 1-1
1.2 RFP Documents 1-1
1.3 General Project Description 1-2
1.4 Procurement Schedule 1-2
1.5 General Provisions Regarding Proposals 1-2
1.5.1 Proposal Contents 1-2
1.5.2 Inclusion of Proposal in DB Documents 1-3
1.5.3 Commitments in the Proposal 1-3
1.5.4 Property of GDOT 1-3
1.6 Improper Conduct 1-3
1.6.1 Prohibited Activities 1-3
1.6.2 Non-Collusion 1-3
1.6.3 Organizational Conflicts of Interest 1-3
1.6.4 Restrictions on Participation 1-4
1.6.5 No Participation on More Than One Proposer Team 1-4
1.7 Equal Employment Opportunity (EEO) 1-4
1.8 DBE Participation 1-5
1.9 Federal Funding and Requirements 1-6
1.10 Status of Environmental Documents 1-6
1.11 Qualification of Construction and Design Firms 1-6
1.11.1 Required Pre-Qualification for Contractors 1-6
1.11.2 Required Pre-Qualification for Engineers 1-6
1.11.3 Pre-Qualification Assistance 1-7
1.12 Establishment of Single Purpose Entity(ies) 1-7
SECTION 2.0 PROCUREMENT PROCESS 2-1
2.1 Method of Procurement 2-1
2.2 Communications between GDOT and Proposers 2-1
2.2.1 Designated Point of Contact 2-1
2.2.2 Rules of Contact 2-1
2.2.3 Language and United States Dollar Requirements 2-2
2.3 Questions and Responses Regarding the RFP 2-2
2.3.1 Form of Requests 2-3
2.3.2 Timing of Requests 2-3

2.3.3 Responses 2-3

2.4 Amendments 2-3

2.5 Reserved 2-3

2.6 Examination of the Request for Proposals Package and Project Site 2-3

2.7 Changes to Proposer's Organization 2-4

SECTION 3.0 RESERVED 3-1

SECTION 4.0 PROPOSAL CONTENT AND SUBMITTAL REQUIREMENTS 4-1

4.1 Format 4-1

4.2 Contents and Organization 4-1

4.2.1 Administrative Information Submittals 4-2
4.2.2 Technical Proposal 4-2
4.2.3 Price Proposal 4-2
4.2.4 Submission of Proposals 4-3

4.3 Disclosure of Proposals 4-4

4.4 Validity of Proposals 4-4

4.5 Proposal Bond 4-4

4.6 Forfeiture of Proposal Bond 4-5

4.7 Cost of Preparing Proposal 4-5

4.8 Non-Compliant Proposal 4-5

4.9 Insurance Requirements 4-5

SECTION 5.0 EVALUATION PROCESS AND CRITERIA 5-1

5.1 Pass/Fail and Responsiveness Evaluation 5-1

5.1.1 Responsiveness 5-1
5.1.2 Administrative Information Submittals Pass/Fail Requirements 5-1
5.1.3 Technical Proposal Pass/Fail Requirements 5-1
5.1.4 Price Proposal Pass/Fail Requirements 5-1

5.2 Proposal Evaluation 5-1

5.3 Requests for Clarification 5-1

5.4 Request for Proposal Revisions 5-2

5.5 Proposal Re-evaluation following Revisions 5-2

5.6 Payment and Performance (P&P) Bonding Requirements 5-2

SECTION 6.0 AGREEMENT AWARD AND EXECUTION 6-1

6.1 No Obligation to Award 6-1

6.2 Award and Execution 6-1

6.2.1 Delivery of Drafts, Execution of DB Documents 6-1
6.2.2 Initial Successful Proposer's Failure to Comply 6-3

6.3 Reserved 6-3

6.4 Debriefing of Unsuccessful Proposers 6-3

6.5 Bid Protest Procedures 6-3

SECTION 7.0 NON-RESPONSIVE TECHNICAL PROPOSAL PROCEDURES 7-1

7.1 GDOT's Responsibilities 7-1

7.2 Proposer's Responsibilities 7-1

7.3 Technical Proposal Resolution 7-1

7.4 Time Frames 7-1

7.5 Costs and Damages 7-1

SECTION 8.0 GDOT'S RIGHTS AND DISCLAIMERS 8-1

8.1 GDOT's Rights 8-1

8.2 Disclaimers 8-2

Exhibits:

Exhibit A Acronyms and Definitions
Exhibit B Administrative Information Submittal Requirements
Exhibit C Technical Proposal Submittal Requirements
Exhibit D Price Proposal and Proposal Bond Submittal Requirements
Exhibit E Reserved
Exhibit F List of GDOT Project Team
Exhibit G List of SharePoint Documents

Forms:

Form A Proposal Letter

Form B Non-Collusion Affidavit

Form C Conflict of Interest Disclosure Statement

Form D Form of Proposal Bond

Form E Construction Contractors Bid Opportunity List

Form F Design-Build Price Proposal

Form G Form of Participating Members, Major Non-Participating Members, Contractors and Key Personnel Commitment

Form H Equal Employment Opportunity Certification

Form I DBE Certification

Form J Buy America Certification

Form K Use of Contract Funds for Lobbying Certification

Form L Debarment and Suspension Certification

Form M Closure Durations, Interim Completion, Substantial Completion, and Final Acceptance Proposal

Form N Reserved

Form O Payment and Performance Bond Form

- Form O-1 Resident Contractor Payment and Performance Bond Form
- Form O-2 Nonresident Contractor Payment and Performance Bond Form

Form P Reserved

Form Q Reserved

Form R Georgia Security and Immigration Compliance Act Affidavit

Form S Opinion of Counsel

Form T Drug Free Workplace

SECTION 1.0 INTRODUCTION AND GENERAL PROVISIONS

1.1 Introduction

The Georgia Department of Transportation (GDOT), an agency of the State of Georgia (State), issued a Request for Qualifications (RFQ) for the SR 53 Westbound at Chattahoochee River Bridge Replacement Project (as described in more detail in Section 1.3, the "Project") dated February 8, 2019. GDOT issued a Request for Proposals (RFP) dated April 19, 2019.

The RFP solicits competitive Proposals (as described in more detail in Section 1.5.1) from qualified Proposers to develop the Project by means of a Design-Build Agreement (the "Agreement") between the successful Proposer and GDOT. Under such Agreement, the Design-Build Team will be required to design and construct the Project during the Contract Time.

Following the release of the RFP, GDOT may opt to engage in a series of confidential meetings and discussions with the Proposers, all in accordance with the procedures set forth in the RFP. In response to feedback and input received from the Proposers and other stakeholders, GDOT may opt to issue Amendments to the Instructions to Proposers (ITP) and/or RFP. If GDOT issues an Amendment to the RFP, the Amendment will supplement or replace the RFP in part or in whole.

Proposals will only be considered from those entities that are selected as qualified Proposers based on their Statements of Qualifications (SOQs) submitted in response to the RFQ. This ITP provides instructions to be followed by Proposers in their responses to the RFP.

This RFP is issued in accordance with the provisions of Section 32-2-81 of the Official Code of Georgia Annotated (Code), Chapter 672-18 of the Rules of the State Department of Transportation, Governing the Design-Build Procedures (Rules), and other applicable laws and guidelines. Proposals must comply with ITP requirements.

Refer to Exhibit 1 of the Agreement for the meaning of various capitalized terms and acronyms used but which are not defined herein. Unless otherwise specified, references to Sections, Exhibits, and Forms within this ITP shall mean Sections of the ITP and Exhibits and Forms attached to the ITP. All times in this ITP are Eastern Standard Time (EST) or Eastern Daylight Time (EDT), as applicable.

1.2 RFP Documents

The RFP consists of the items listed below, and any other documents that may be issued by Amendment, as such documents may be amended and supplemented:

(a) Instructions to Proposers (ITP) (including the attached Exhibits and Forms); and

(b) DB Documents.

Refer to Article 1.2 of the Agreement for a list of the DB Documents and their order of precedence. The Reference Information Documents (RIDs) are listed in Exhibit G hereto.

The ITP and the RIDs are not contract documents and will not form a part of the DB Documents. GDOT does not make any representation or guarantee as to the accuracy, completeness, or fitness of the RIDs. GDOT does not take any responsibility for the RIDs, and Proposers are responsible for any conclusions they may draw from the RIDs. GDOT is making the RIDs available to Proposers for the sole purpose of providing information in the possession of GDOT, regardless of whether such information is accurate, complete, pertinent, or of any value.

1.3 General Project Description

The Project includes the replacement of the SR 53 Westbound (WB) bridge over the Chattahoochee River/Lake Lanier (Structure ID 139-0020-0), located approximately 4.5 miles west of Gainesville in Hall County, GA. A more detailed description of the Project can be found within the DB Documents and, for reference, in the RIDs.

The Design-Build Team will be responsible for the design and construction of the Project during the Contract Time. As part of such Work, the Design-Build Team will be responsible for undertaking and completing certain Utility Adjustments pursuant to Article 7.5 of the Agreement and Section 6 of the Technical Provisions.

The Department will acquire ROW as identified in Volume 1, Exhibit 4 (Right of Way).

1.4 Procurement Schedule

The procurement schedule is as follows:

	Activity	Date	Time
1.	Issue RFP	4/19/2019	---------
2.	Deadline for Proposers to submit questions regarding RFP	5/24/2019	5:00 PM
3.	Deadline for submission of changes to Proposer's organization	5/24/2019	5:00 PM
4.	**Proposal Due Date**	**6/14/2019**	**11:00 AM**
5.	Letting (Selection of Apparent Successful Proposer) – Room 402-404	6/21/2019	11:00 AM

All dates set forth above and in the RFP are subject to change in GDOT's sole discretion. All times are Atlanta local prevailing times. To the extent such dates are changed, GDOT will formally notify each Proposer through the SharePoint Site described in Section 2.2 below.

1.5 General Provisions Regarding Proposals

1.5.1 Proposal Contents

As used in this procurement, the term “Proposal” means a Proposer's complete response to the RFP, including but not limited to the Proposer's:

(a) Administrative Information Submittals;

(b) Technical Proposal for the Project; and

(c) Price Proposal for the Project.

Detailed instructions regarding the Administrative Information Submittals, the Technical Proposal, and the Price Proposal are provided in Exhibit B, Exhibit C, and Exhibit D, respectively. Forms required for inclusion in the Proposals are attached to this ITP. Each Proposal component shall be clearly titled and identified, and shall be submitted without reservations, qualifications, conditions, or assumptions. Any failure to provide all the information and all completed Forms in the format specified by the ITP may result in GDOT's

rejection of the Proposal or a lowered score, depending on the nature of the omission, determined by GDOT at its sole discretion. All blank spaces in the Proposal forms must be filled in as noted. No substantive change(s) should be made to the original text or structure of the Proposal Forms.

1.5.2 Inclusion of Proposal in DB Documents

Portions of the successful Proposer's Proposal will become part of the DB Documents, as applicable and to the extent specified in the Agreement. All other information is for evaluation purposes only and will not become part of the DB Documents.

1.5.3 Commitments in the Proposal

GDOT will give no consideration to tentative or qualified commitments in the Proposals. For example, GDOT will give no consideration to phrases such as "we may," "are considering," "will endeavor to," or phrases of a similar nature in the evaluation process because they do not indicate a firm commitment.

1.5.4 Property of GDOT

All documents included in the Proposals submitted by Proposers in response to the RFP shall become the property of GDOT and will not be returned to the Proposer.

1.6 Improper Conduct

1.6.1 Prohibited Activities

If the Proposer, or anyone representing the Proposer, offers, gives, solicits, accepts, or receives, directly or indirectly, any advantage, gift, gratuity, discount, bribe, or loan of any sort to or from GDOT, the State Transportation Board, or officers, administrators, staff or consultants of GDOT, including agents or anyone representing the foregoing at any time during the Project procurement process: (1) GDOT shall immediately disqualify the Proposer; (2) the Proposer shall forfeit its Proposal Bond; and (3) GDOT may sue the Proposer for damages.

1.6.2 Non-Collusion

The Proposer shall not undertake any of the prohibited activities identified in the Non-Collusion Affidavit (Form B). Note that multiple parties are required to execute copies of Form B.

To report bid rigging activities, call the US DOT toll-free "hotline" (1-800-424-9071) Monday through Friday, 8:00 AM to 5:00 PM, Eastern time. All information will be treated confidentially and caller anonymity will be respected.

1.6.3 Organizational Conflicts of Interest

Proposers are advised that the Conflicts of Interest Policy as referred to in **GDOT's Design-Build Manual**, and the organizational conflict of interest rules found in 23 Code of Federal Regulations (CFR) Part 636, Subpart A, including 23 CFR § 636.116, apply to this procurement.

Each Proposer must include in its Proposal a full disclosure of all potential organizational conflicts of interest within its team (Form C). Note that multiple parties are required to execute copies of Form C.

The Proposer is prohibited from receiving any advice or discussing any aspect of the Project or the procurement of the Project with any person or entity with an organizational conflict of interest, including, but not limited to, the entities and individuals listed in Exhibit F (List of GDOT Project Team); and any parent, affiliate, or subsidiary of any of the foregoing entities, or an entity that is under common ownership, control or management with any of the foregoing entities.

By submitting its Proposal, each Proposer agrees that, if an organizational conflict of interest is thereafter discovered, the Proposer must make an immediate and full written disclosure to GDOT that includes a description of the action that Proposer has taken or proposes to take to avoid or mitigate such conflicts. If the Apparent Successful Proposer was aware of an organizational conflict of interest prior to award of the Agreement and did not disclose the conflict to GDOT, GDOT may terminate the Proposal for default and may award the Agreement to the responsive Proposer with the next lowest-Price Proposal.

1.6.4 Restrictions on Participation

Proposers are advised that the following entities and individuals are precluded from submitting a Proposal and from participating on a Proposer team as a Participating Member, Major Non-Participating Member, Contractor, Subcontractor or subconsultant:

(a) any entity or individual listed in Exhibit F (List of GDOT Project Team). GDOT has contracted with these entities or individuals, as the case may be, to aid in the development of the RFQ, RFP, estimates or scope of services for the Project, or to participate in the SOQ or Proposal evaluation process;

(b) any entity that is a parent, affiliate, or subsidiary of any of the entities listed in Exhibit F, or that is under common ownership, control or management with any of the foregoing entities; and

(c) any contractor who is currently suspended, debarred or voluntarily excluded under 49 CFR Part 29 or is otherwise determined to be ineligible to participate in the federal-aid highway program.

1.6.5 No Participation on More Than One Proposer Team

To ensure a fair procurement process, Participating Members and Major Non-Participating Members of Proposer teams are forbidden from participating, as a Participating Member or Major Non-Participating Member, on another Proposer team on this Project during the course of the Project procurement (i.e. until execution of the Agreement by GDOT). The foregoing prohibition extends to affiliated entities of Participating Members and Major Non-Participating Members. GDOT reserves the right to disqualify any Proposer that fails to comply with this prohibition. If a Proposer has any question as to whether or not its proposed team would be in compliance with the terms of this Section 1.6.5, such Proposer may submit the issue to GDOT in writing, describing in reasonable detail the proposed structure, and seeking clarification.

1.7 Equal Employment Opportunity (EEO)

Proposers shall not, in connection with the RFP and the DB Documents, discriminate against any employee or applicant for employment because of race, color, religion, sex, national origin, age, marital status, or disability. Proposers shall take affirmative action to ensure that applicants for employment and employees are not discriminated against because of their race, color, religion, sex, national origin, age, marital status, or disability. The areas requiring such

affirmative action shall include, but not be limited to, the following: layoff or termination, rates of pay or other forms of compensation, employment, job assignment, promotion, demotion, transfer, recruitment and recruitment advertising, and selection for training, including apprenticeship, pre-apprenticeship, and on-the-job training. Please see Attachment 5 to Exhibit 8 of the Agreement for the federal equal employment opportunity provisions that apply to the Project.

Each Proposer must include in its Proposal an Equal Employment Opportunity Certification (Form H). Note that multiple parties are required to execute copies of Form H.

1.8 DBE Participation

The purpose of this section is to establish criteria for acceptability of Disadvantaged Business Enterprise (DBE) firms for Work performed on this contract. The intent is to ensure all participation counted toward fulfillment of the DBE goals is (1) real and substantial, (2) actually performed by viable, independent, DBE owned firms; and (3) in accordance with the spirit of applicable laws and regulations.

The policy of GDOT is to ensure compliance with Title VI of the Civil Rights Act of 1964, 49 Code of Federal Regulations, Part 26, and related statutes and regulations in all program activities.

GDOT does not discriminate and shall take all necessary and reasonable steps to ensure nondiscrimination on the basis of race, color, religion, sex, national origin, age, marital status, or disability in the award, administration and performance of any GDOT assisted contract or in the administration of its DBE Program.

All Proposers shall submit a completed “Construction Contractors Bid Opportunity List” (Form E) to GDOT in accordance with ITP Exhibit B, Section B.2.1 as a matter of Proposer responsibility.

DBE payments and commitments shall be separate and distinct and cannot be transferred or combined in any manner.

The DBE Goal specified in the Agreement will be a percentage representing the DBE Race Conscious Participation. The Design-Build Team (DB Team) will strive to achieve an additional percentage during the course of the Project, in order to assist GDOT in meeting the overall GDOT statewide DBE goal.

The DBE Goal for this project is identified in Form I. The Proposer is encouraged to meet this goal throughout the Term of Agreement and will report monthly on the goal attainment status throughout the Term of Agreement. In addition, the Proposer shall demonstrate to GDOT on no less than a quarterly basis that the Project goal is being achieved. If the Project goal has not been achieved at the time of annual reporting, the Proposer shall demonstrate that “good faith efforts” aimed at achievement have been made as described in 49 CFR § 26.53. Further, the Proposer is expected to work toward goal attainment in all areas of the Work, to include pre-construction and design Elements as well as the Construction Work portion of the Project.

For further information regarding GDOT's DBE program and the Design-Build Team's DBE obligations, Proposers may contact GDOT's Equal Opportunity Office during regular business hours at (404) 631-1972.

1.9 Federal Funding and Requirements

Proposers are advised that the Project will require the use of federal funds. Accordingly, applicable federal law and FHWA regulations will govern the Project's procurement and DB Documents.

The required contract provisions for Federal-aid construction contracts included in form FHWA-1273 must be physically incorporated in each of the Proposer's/ Lead Contractor's/ Design-Build Team's construction contracts and subcontracts, and in all lower-tier subcontracts (excluding purchase orders, rental agreements, and other agreements for supplies or services).

1.10 Status of Environmental Documents

GDOT has prepared the Environmental Document and associated studies. The Environmental Document was approved on March 26, 2019.

GDOT has provided Proposers with environmental parameters in the form of an Environmental Commitments Table provided in the RIDs.

1.11 Qualification of Construction and Design Firms

Proposers shall ensure that the entities identified in Sections 1.11.1 and 1.11.2 have satisfied the pre-qualification requirements set forth in this Section 1.11.

In addition, before commencing performance of any Work, all firms must be registered to do business in the State of Georgia. This can be accomplished by contacting the Georgia Secretary of State Corporations Division Office at (404) 656-2817 or visiting **http://www.sos.ga.gov/corporations**.

1.11.1 Required Pre-Qualification for Contractors

The Lead Contractor shall be pre-qualified with GDOT prior to the Proposal Due Date. If any portion of the Work is not performed by the pre-qualified Lead Contractor, the entity performing the Work shall also be pre-qualified prior to initiating any Work. Any proposed changes to the team must be approved by GDOT.

The pre-qualification process involves, but is not limited to, submitting (a) a completed contractor qualification form and (b) financial statements to GDOT. For further information regarding the pre-qualification process, please see:

http://www.dot.ga.gov/PS/Business/Prequalification

1.11.2 Required Pre-Qualification for Engineers

Proposer shall only use entities prequalified in their respective disciplines (engineering, design, traffic analysis, geotechnical, NEPA, construction, etc.) as presented in the SOQ. Any proposed changes to the DB Team must be approved by GDOT. All Work must be performed by entities that are prequalified by GDOT.

If the Proposer's design for the Project includes Design Work outside the scope of the area classes set forth in the RFQ, at least one team member shall be prequalified with GDOT in the appropriate area class.

The prequalification requirement does not apply to any area class that is not implicated by a Proposer's design for the Project. The pre-qualification process involves submitting (a) a pre-

qualification form and (b) grid sheet to GDOT. For further information regarding the pre-qualification of engineers, please see:

http://www.dot.ga.gov/PS/Business/Prequalification

1.11.3 Pre-Qualification Assistance

Proposers can obtain pre-qualification assistance by calling:

- (404) 631-1147 for contractors
- (404) 631-1148 for engineering consultants or emailing **consultants_prequals@dot.ga.gov**

1.12 Establishment of Single Purpose Entity(ies)

If the Apparent Successful Proposer contemplates the creation of one or more single purpose entities as the parties that will execute the DB Documents, the Apparent Successful Proposer is required to establish each such single purpose entity and submit executed copies of the articles of incorporation and any other corporate formation documents for the single purpose entity to GDOT in accordance with Section 6.2.1. Proposers anticipating the creation of any such single purpose entity must include pro forma corporate formation documents in the Proposal, as described in Exhibit B. Failure to meet the requirements in this Section 1.12 will result in forfeiture of the Apparent Successful Proposer's Proposal Bond.

SECTION 2.0 PROCUREMENT PROCESS

2.1 Method of Procurement

GDOT is issuing the RFP in accordance with the provisions of Sections 32-2-81 of the Code, Chapter 672-18 of the Rules, and other applicable laws and guidelines. GDOT intends to award the DB Documents to the Proposer that submits the lowest price responsive Proposal. Subject to Section 8.1, GDOT will base the evaluation of Proposals on information submitted in the Proposals and will involve both pass/fail evaluation factors and an evaluation of administrative, technical, and price criteria, as further detailed in Section 5 below and in the Exhibits to this ITP.

2.2 Communications between GDOT and Proposers

The RFP will be issued to Proposers in electronic format on the GDOT SharePoint site for the Project (the "SharePoint Site"). The SharePoint Site website address will be provided separately to each Proposer. Each Proposer is required to treat the address as confidential information and to check the SharePoint Site regularly for Amendments to the RFP and for other procurement-related information.

2.2.1 Designated Point of Contact

The Contracting Officer for the Project is Rick Merritt and can be contacted at:

Georgia Department of Transportation
Attention: Rick Merritt
Office of Innovative Delivery / P3 Division
One Georgia Center, 19th Floor
600 West Peachtree Street, NW
Atlanta, Georgia 30308
E-mail: 53atChattahoochee@dot.ga.gov

From time to time during the procurement or during the Term of the Agreement, GDOT may designate another point of contact to carry out some or all of the obligations pertaining to the Project.

2.2.2 Rules of Contact

Unless specifically authorized elsewhere in this ITP, the Contracting Officer, as may be changed in writing by GDOT, is the single contact and single source of information for this procurement.

The rules of contact set forth in this Section 2.2.2 shall apply during the Project procurement, commencing with the issuance of this RFP. These rules are designed to promote a fair, unbiased, and legally defensible procurement process. Contact, as used herein, includes face-to-face, telephone, electronic-mail (e-mail), text or any other form of informal and formal written communication.

The specific rules of contact are as follows:

(a) Neither a Proposer nor any of its team members may communicate with another Proposer or members of another Proposer's team with regard to the RFP or either team's Proposal. This prohibition does not apply to (1) Proposer communication with a contractor that is on both its team and another Proposer's team, provided that the

contractor shall not act as a conduit of information between the two Proposers; and (2) public discussion regarding the RFP at GDOT-sponsored informational meetings.

(b) Unless otherwise specifically noted in this ITP or authorized by the Contracting Officer, all Proposer communication with GDOT will be between Proposer's identified representatives and the Contracting Officer. All such communication must be in writing (by mail or e-mail).

(c) Under normal circumstances, the Contracting Officer will contact a Proposer in writing through Proposer's designated representative.

(d) Continuing until the earliest of (1) execution and delivery of the DB Documents, (2) GDOT's rejection of all Proposals or (3) cancellation of the Project procurement, neither a Proposer nor its agents may have ex parte communications with GDOT employees, members of the Technical Review Committee, the Bid Review Committee, the State Transportation Board, any other person who will evaluate Proposals, or any person identified in Section 1.6.4 regarding the Project, except for communications expressly permitted in this ITP or through the process identified above. The foregoing restriction shall not, however, preclude or restrict communications regarding matters unrelated to the Project or from participating in public meetings or any public or Proposer workshop related to the Project. GDOT may, in its sole discretion, disqualify any Proposer engaging in such prohibited communications.

(e) Any contact by a Proposer determined by GDOT to be improper may result in disqualification of that Proposer.

(f) GDOT will not be responsible for or bound by (1) any oral communication, or (2) any other information or contact that occurs outside the official communication process specified herein, unless confirmed in writing by the Contracting Officer.

2.2.3 Language and United States Dollar Requirements

All correspondence regarding the RFP, the Proposal, the DB Documents and all other matters pertaining to this procurement is to be in the English language. If any original documents required for the Proposal are in any other language, the Proposer shall provide a certified English translation, which shall take precedence in the event of conflict with the original language. The Proposer shall exclusively use United States dollars in its Proposal, except in pre-printed or reference materials. Unless otherwise specified, all references to monetary values shall be in United States dollars. In the evaluation of Proposals, GDOT may choose to disregard any financial figures provided by the Proposer in denominations other than United States dollars.

2.3 Questions and Responses Regarding the RFP

Proposers shall be responsible for reviewing the RFP and any Amendments issued by GDOT prior to the Proposal Due Date, and for requesting clarification or interpretation through written questions of any perceived discrepancy, deficiency, ambiguity, error, or omission contained therein; or of any provision which the Proposer fails to understand. Proposers shall submit, and GDOT will respond to written questions in accordance with this Section 2.3. Any responses by GDOT will not be considered part of the DB Documents.

2.3.1 Form of Requests

Proposers shall deliver written questions to the Contracting Officer via e-mail or certified U.S. mail. GDOT will only consider written requests made by Proposers' designated representatives and will not consider telephone or other oral requests. Proposers are responsible for ensuring that written questions clearly indicate on the first page or in the subject line, as applicable, that the material relates to the Project. Written questions must include the requestor's name, address, telephone, and email address; and the Proposer they represent.

No confidential questions will be accepted.

Proposers will be limited to 50 comments or questions (combined) with respect to the RFP.

If a question has more than one subpart, each subpart will be considered a separate question. Corrections of typographical errors, incorrect cross references, or inconsistencies within or among the RFP documents will be excluded from the above numerical limitations.

2.3.2 Timing of Requests

Proposers must submit any requests under this Section 2.3 prior to the deadline for such requests in Section 1.4. GDOT is not required to answer any questions submitted by Proposers after this deadline.

2.3.3 Responses

GDOT's responses to questions submitted under this Section 2.3 will be in writing and GDOT will post responses on the SharePoint Site to all Proposers.

2.4 Amendments

GDOT reserves the right, in its sole discretion, to revise, modify or change the RFP and/or procurement process at any time before the Proposal Due Date. Any such revisions will be implemented through issuance of Amendments to the RFP. Amendments will be posted on the SharePoint Site, and Proposers will be notified of the issuance of such Amendments. If any Amendment significantly impacts the RFP, as determined in GDOT's sole discretion, GDOT may change the RFP schedule, including the Proposal Due Date. The announcement of such schedule modification will be included in the Amendment. In addition, the Amendment will indicate the latest date for submittal of any clarification requests concerning the Amendment.

GDOT will not be bound by, and the Proposer shall not rely on, any oral communication or representation regarding the RFP documents, or any written communication except to the extent that it is contained in the RFP or in an Amendment to the RFP and is not superseded by a later Amendment to the RFP.

2.5 Reserved

2.6 Examination of the Request for Proposals Package and Project Site

GDOT shall permit Proposers to access the Project Site within the Existing ROW to perform limited investigations. Proposers must notify the Contracting Officer, who will work with the GDOT Area Office to allow Proposer access to the Project Site. Proposers must follow all applicable state laws, including erosion control and traffic control. Proposers are expected to carefully examine the Project Site and the complete RFP package before submitting a Proposal.

Each Proposer shall, by submission of a Proposal, be deemed to have made such examination and to have satisfied itself as to the conditions to be encountered in performing the Work under the DB Documents.

Geotechnical corings collected by GDOT will be made available on or by May 16, 2019; contact the Contracting Officer to schedule inspection of the samples, if desired. Provide three dates for inspection and specific samples of interest (if known). The Department will reply with the date available to inspect the samples. If the proposed dates are not available GDOT will request three additional dates.

2.7 Changes to Proposer's Organization

Proposers are advised that, in order for a Proposer to remain qualified to submit a Proposal, a Proposer's organization as identified in the SOQ must remain intact for the duration of the procurement process, unless otherwise approved in writing by GDOT. This restriction applies to any changes in the following:

(a) the Participating Members and Major-Non-Participating Members of Proposer;

(b) the lead individual from each Participating Member and Major Non-Participating Member;

(c) any Key Personnel, including:

1. one person to act as the Lead Contractor Project Manager.
2. one person to act as the Lead Design Consultant Project Manager.
3. one person to act as the Engineer of Record, who may also be the Lead Design Consultant Project Manager.
4. one person to act as the Contractor Superintendent.
5. one person to act as the Construction Quality Assurance Manager, who **may not** be the same person as the Contractor Superintendent; and

(d) any other key members of Proposer's management team or other individuals that Proposer identified in its SOQ.

If a Proposer wishes to change the organization represented in its SOQ by adding, removing, or substituting any of the individuals listed above, by changing the role of one of these individuals, by changing or adding a Participating Member or Major Non-Participating Member to the Proposer team, or by changing the level of participation of one or more Participating Members of its team, the Proposer must submit to the Contracting Officer a written request to change its organization no later than the date specified in Section 1.4. If a request is made to allow an addition to the team, including a new Participating Member or Major Non-Participating Member, the Proposer shall submit with its request the information required by the RFQ for the position the proposed individual will fill. If a request is made to allow deletion of one of the individuals listed above, the Proposer shall submit such information as GDOT may require demonstration that the changed Proposer team is equal to or better than the team shortlisted by GDOT during the RFQ phase of this procurement.

GDOT shall have sole discretion to grant or withhold approval of any requested change and to waive the requirement that Proposer submit such change no later than the date specified in Section 1.4.

SECTION 3.0 RESERVED

SECTION 4.0 PROPOSAL CONTENT AND SUBMITTAL REQUIREMENTS

4.1 Format

To facilitate the evaluation of Administrative Information Submittals, Technical Proposals, and Price Proposals and to help protect the confidentiality of proprietary information, the Proposal submittal described in Section 4.2 shall be submitted in two separate sealed packages.

Unless otherwise specified in this ITP, all written submittals must be prepared on 8-1/2- by 11-inch white paper. All written submittals, regardless of paper size, must be prepared on white paper and included in the applicable binder. Each section within each volume shall have sequentially numbered pages, shall be separated by a divider with a tab, and shall be prepared using no smaller than 11-point font size, except for tables, which may be prepared using no smaller than 10-point font size. Some of the required documents have specified page limitations, as set forth in Exhibit B, Exhibit C and Exhibit D. GDOT may disregard documents not complying with these page limitations. Pages may be printed on two sides, in which case each side shall be considered one page. Printed lines may be single-spaced. Proposers shall not include standard corporate brochures, awards, licenses and marketing materials and GDOT will not evaluate such materials.

4.2 Contents and Organization

Proposers shall clearly index their Administrative Information Submittals, Technical Proposal, and Price Proposal using pages with tabs and organize them in the order set forth in this Section 4.2. The proposal submittal shall contain separately bound and labeled Administrative Information Submittals plus Technical Proposal, and the Price Proposal, each in a separate loose-leaf three ring binder, including the information described in this section. Proposers may subdivide each Administrative Information Submittal plus Technical Proposal, and Price Proposal further as needed. The electronic submittals (portable flash drives for each volume, physically attached securely to each volume) shall follow equivalent organizational standards, and shall use a searchable format with appropriate bookmarks.

If the Proposer has any items that it deems confidential, trade secret or proprietary information, the first page of the Administrative Information Submittals must be a page executed by the Proposer that sets forth the specific items the Proposer deems confidential, trade secret or proprietary information protected from public disclosure under the Open Government Laws. The Proposer shall list the specific statute within the Open Government Laws that the Proposer has reasonably determined is exempt from disclosure under Section 50-18-72 of the Code or any other applicable law.

In this case and in accordance with Section 50-18-72 (a) (34) of the Code, the Proposer shall submit and attach to the records an affidavit affirmatively declaring that specific information in the records constitute trade secrets pursuant to Article 27 of Chapter 1 of Title 10. If such Proposer attaches such an affidavit, before producing such records in response to a request under this article, the agency shall notify the Proposer of its intention to produce such records as set forth in this paragraph. If GDOT makes a determination that the specifically identified information does not in fact constitute a trade secret, it shall notify the Proposer submitting the affidavit of its intent to disclose the information within ten days unless prohibited from doing so by an appropriate court order. In the event the Proposer wishes to prevent disclosure of the requested records, the Proposer may file an action in superior court to obtain an order that the requested records are trade secrets exempt from disclosure. The Proposer filing such action shall serve the requestor with a copy of its court filing. If GDOT makes a determination that the

specifically identified information does constitute a trade secret, GDOT shall withhold the records, and the requester may file an action in superior court to obtain an order that the requested records are not trade secrets and are subject to disclosure.

The list required under this Section 4.2 and in Exhibit B is intended to provide input to GDOT as to the confidential nature of a Proposer's Proposal, but in no event shall such list be binding on GDOT or determinative of any issue relating to confidentiality. Blanket designations that do not identify the specific information or the applicable statute(s) shall not be acceptable and may be cause for GDOT to treat the entire Proposal as public information. In no event shall the State, GDOT or any of their respective agents, representatives, consultants, directors, officers or employees be liable to a Proposer or Proposer team member for the disclosure of all or a portion of a Proposal submitted under this RFP. Additionally, the Proposer shall add a "confidential" watermark to each page that it deems confidential under this paragraph.

If GDOT receives a request for public disclosure of all or any portion of the materials identified as confidential and included in any part of a Proposal, GDOT will promptly notify the applicable Proposer of the request. The Proposer may seek a protective order or other appropriate remedy at such Proposer's sole cost and expense. If GDOT determines in good faith that the materials identified as "confidential" are not exempt from the Open Government Laws, GDOT will release the requested information. GDOT shall make the final determination regarding whether the requested information is to be disclosed or withheld.

Nothing contained in this provision shall modify or amend requirements and obligations imposed on GDOT by the Open Government Laws or other applicable law, and the provisions of the Open Government Laws or other laws shall control in the event of a conflict between the procedures described above and the applicable law.

Please see Exhibit B, Exhibit C, and Exhibit D for special instructions regarding submission of information relating to the Price Proposal.

4.2.1 Administrative Information Submittals

The Administrative Information Submittals shall contain the components described in Exhibit B, separated and labeled appropriately and organized; and included in a separate sealed package.

4.2.2 Technical Proposal

The Technical Proposal shall contain the components described in Exhibit C, separated and labeled appropriately and organized; and included within the Administrative Information Submittals package.

The Technical Proposal shall be consistent with the requirements in the DB Documents. In drafting the Technical Proposal, Proposers shall use the versions of any manuals, guidelines or specifications, including but not limited to those identified in the Technical Provisions, that are in effect at the date of the RFP advertisement, unless expressly provided otherwise.

4.2.3 Price Proposal

The Price Proposal shall contain the components described in Exhibit D, separated, sealed, and labeled appropriately and organized; and included in a separate sealed package.

Any financial statements or updates to financial statements, as required for Proposers acting as a Joint Venture or Partnership, shall be submitted electronically to the extent possible, including links to SEC filings. If hardcopies are submitted, they must be provided in a separate notebook.

If a Proposer is not a Joint Venture or Single Purpose Entity, the Price Proposal should only consist of a sealed envelope containing the required components described in Exhibit D.

4.2.4 Submission of Proposals

Proposers shall submit two separate sealed packages to GDOT and containing contents described below:

(a) Administrative Information Submittals and Technical Proposal – Package 1

a. One bound original paper version of the Administrative Information Submittals (marked "ORIGINAL").

b. One bound paper copy of the Administrative Information Submittals (marked "COPY").

c. One bound original paper version of the Technical Proposal (marked "ORIGINAL"). The original Technical Proposal shall be included as the last item in the Administrative Information Submittals three ring binder.

d. Three bound paper copies of the Technical Proposal (each marked "COPY"). Include as three separate stapled bound copies in the Administrative Information Submittals package, but not included within the Administrative Information Submittals three ring binder.

e. One electronic copy of the Technical Proposal and Administrative Information Submittals on a separate portable flash drive securely attached to the original Technical Proposal paper volume.

f. One electronic copy of the Proposal Schedule in "PDF" as described in Exhibit C on the same portable flash drive as the Technical Proposal and Administrative Information Submittals electronic copy.

(b) Price Proposal – Package 2

a. One bound original paper version of the Price Proposal (marked "ORIGINAL").

b. One electronic copy of the Price Proposal (Financial Information Only) in both "PDF" and original/native file format(s) including the associated electronic files used to develop the proposal. The electronic copy shall be on a separate portable flash drive securely attached to the original paper volume.

Proposers shall submit and individually label all packages making up its Proposal as follows:

Proposal for the SR 53 Westbound at Chattahoochee River Bridge Replacement Project

Re: Administrative Information Submittals; Technical Proposal; Price Proposal

Proposals shall be delivered no later than the Proposal Due Date (as specified in Section 1.4) to:

Georgia Department of Transportation
Attention: Rick Merritt
Office of Innovative Delivery
One Georgia Center
600 West Peachtree Street, NW
Atlanta, Georgia 30308

Acknowledgment of receipt of Proposals will be evidenced by the issuance of a receipt by a member of GDOT staff. GDOT will not accept Proposals submitted via facsimile or e-mail.

GDOT will not accept any Proposals delivered after the Proposal Due Date and time as specified in Section 1.4. Any Proposals received after the specified time on the Proposal Due Date will be rejected and not considered. Proposers are solely responsible for assuring that GDOT receives their Proposals by the specified time on the Proposal Due Date at the address listed above. GDOT shall not be responsible for delays in delivery caused by weather, difficulties experienced by couriers or delivery services, delays due to security check-in process, misrouting of packages by courier or delivery services, improper, incorrect or incomplete addressing of deliveries and other occurrences beyond the control of GDOT.

If Proposals will be delivered to GDOT via overnight express service (e.g., FedEx, UPS, etc.), Proposer must notify the Contracting Officer at the Project email address listed in Section 2.2.1 the day the submittal is sent.

4.3 Disclosure of Proposals

No Proposal shall be made public until the procurement phase of the Project, including any evaluation, negotiations, award and execution of the DB Documents has been completed.

It is GDOT's intent to post to the GDOT Design-Build webpage all Technical Proposals, upon the execution of the DB Documents and issuance of NTP 1.

4.4 Validity of Proposals

Proposals submitted and not withdrawn as of the Proposal Due Date shall be valid for a period of 120 days commencing on the Proposal Due Date. No Proposer shall withdraw its Proposal within the 120-day period, unless notified by GDOT that (i) the DB Documents for the Project will not be awarded by GDOT pursuant to the RFP or (ii) GDOT has awarded the DB Documents to another Proposer, has received the executed DB Documents and other required documents, and does not intend to award the DB Documents to the Proposer that is requesting the withdrawal of the submitted Proposal.

Any Proposer may elect, in its sole discretion, to extend the validity of its Proposal beyond the time periods set forth above.

4.5 Proposal Bond

Each Proposer shall submit a Proposal Bond, as described in Exhibit D and in the form provided in Form D.

4.6 Forfeiture of Proposal Bond

Each Proposer understands and agrees that if it has submitted and not withdrawn its Proposal as of the Proposal Due Date and (i) withdraws any part or all of its Proposal (without the written consent of GDOT) while the Proposal is valid or (ii) if it is selected as the Apparent Successful Proposer pursuant to Section 6.2 or Section 6.2.2 should refuse or be unable to furnish any commitments made in its Proposal, GDOT shall be entitled to draw on the Proposal Bond in its entirety.

The Proposer acknowledges that the forfeiture of the Proposal Bond constitutes liquidated damages and is not a penalty, and the amount forfeited is fair and reasonable. Such payment represents a reasonable estimate of fair compensation to GDOT for the work required to re-procure the Project and the reputational losses which may accrue.

Subject to Section 6.2.1, GDOT will retain the Proposal Bond for all Proposers until the DB Documents have been fully executed, GDOT has canceled the RFP or the conclusion of the validity period described in Section 4.4; after which GDOT will return the Proposal Bond for each unsuccessful Proposer, except any Proposal Bond drawn upon by GDOT. Further, GDOT shall return the Proposal Bond to the Apparent Successful Proposer within two Business Days of GDOT's receipt of the Payment and Performance Bonds, in accordance with Section 5.6.

The Proposer understands that any material alteration, as determined by GDOT in its sole discretion, of documents specified in this Section 4 including the Form of Proposal Bond (Form D), will render the Proposal non-responsive and non-compliant, unless such alteration was authorized by GDOT in writing prior to the Proposal Due Date.

4.7 Cost of Preparing Proposal

The cost of preparing the Proposal and any costs incurred at any time before or during the Proposal process shall be borne by the Proposer.

4.8 Non-Compliant Proposal

The Proposer shall submit a Proposal that provides all the information required by the ITP. If the Proposal does not fully comply with these requirements, GDOT may deem the Proposal non-responsive in which case the Proposer shall be disqualified. In addition, GDOT may consider Proposals non-responsive and the Proposer disqualified for the following reasons:

(a) If the Proposal is not submitted in the format specified in this ITP, is illegible or is incomplete;

(b) If the Proposal contains multiple, conditional or alternate Proposals or contains any omission, erasures, alterations, unauthorized additions or other irregularities of any kind; or

(c) If the Proposer is in arrears in the payment of any obligation due and owing the State, including the payment of taxes and employee benefits.

4.9 Insurance Requirements

Proposers are cautioned to carefully review the minimum insurance requirements set forth in the DB Documents and to take these minimum requirements into account in putting together their Technical Proposal and Price Proposal.

SECTION 5.0 EVALUATION PROCESS AND CRITERIA

Upon GDOT's receipt of the Proposals, GDOT will proceed to review the Proposals using the pass/fail factors set forth in Section 5.1. As set forth in Section 5.4, the evaluation process may, at GDOT's sole discretion, include a request for revised Proposals. GDOT will determine which Proposal is the Apparent Successful Proposer in accordance with the selection process set forth in this Section 5.

GDOT may, in its sole discretion, reject all Proposals or advertise for new Proposals, if, in the judgment of GDOT, the best interests of the public will be promoted by doing so.

5.1 Pass/Fail and Responsiveness Evaluation

Each Proposal will be reviewed for responsiveness based on the pass/fail criteria set forth in this Section 5.1. Each Proposer must satisfy each pass/fail requirement set forth in Sections 5.1.2 through Section 5.1.4 and be deemed to have submitted a responsive Proposal pursuant to Section 5.1.1 in order for GDOT to consider the Proposal responsive. Proposers are advised that failure to achieve a “pass” rating on any “pass/fail” factor will result in GDOT declaring the Proposal non-responsive and the Proposer being disqualified. Prior to making such determination, GDOT may, in its sole discretion, request clarifications of the information submitted in the Proposal (see Section 5.3).

5.1.1 Responsiveness

Proposers that GDOT determines are non-responsive as set forth in Section 5.1 may be excluded from further consideration. Proposers will be advised regarding a determination of non-responsiveness.

5.1.2 Administrative Information Submittals Pass/Fail Requirements

The Administrative Information Submittals will be reviewed on a pass/fail basis to determine if it meets the requirements of Exhibit B.

5.1.3 Technical Proposal Pass/Fail Requirements

The Technical Proposal will be reviewed on a pass/fail basis to determine if it meets the requirements of Exhibit C.

5.1.4 Price Proposal Pass/Fail Requirements

The Price Proposal will be reviewed on a pass/fail basis to determine if it meets the requirements of Exhibit D.

5.2 Proposal Evaluation

The Proposer submitting the lowest-price responsive Proposal will be identified as the Apparent Successful Proposer.

5.3 Requests for Clarification

GDOT may at any time issue one or more requests for clarification to the individual Proposers, requesting additional information or clarification from a Proposer, or may request a Proposer to

verify or certify certain aspects of its Proposal. Any requests for clarification shall be in writing to the Proposer's designated representative. Proposers shall respond to any such requests within two Business Days (or such other time as is specified by GDOT) from receipt of the request. The scope, length and topics to be addressed in clarifications shall be prescribed by, and subject to the discretion of GDOT.

Upon receipt of requested clarifications and additional information as described above, if any, the Proposals may be re-evaluated to factor in the clarifications and additional information.

5.4 Request for Proposal Revisions

GDOT may, at any time after receipt of Proposals and prior to final award, determine that it is appropriate to request changes to the Proposals ("Proposal Revisions"). If Proposal Revisions are requested, GDOT will follow the requirements described in 23 CFR Part 636. GDOT may request Proposal Revisions with or without discussions as described therein. The request for Proposal Revisions will identify any revisions to the RFP and will specify terms and conditions applicable to the Proposal Revisions, including identifying a time and date for delivery. In the event that Proposal Revisions are requested, the term "Proposal," as used in the RFP, shall mean the original Proposal, as modified by the Proposal Revisions.

5.5 Proposal Re-evaluation following Revisions

Upon receipt of Proposal Revisions pursuant to Section 5.4 above, GDOT will re-evaluate the Proposals as revised in accordance with the methodology described in Section 5.2.

5.6 Payment and Performance (P&P) Bonding Requirements

The Apparent Successful Proposer shall deliver to GDOT P&P Bonds in compliance with GDOT Special Provision 103.05 and Form O; and within the timeframe specified in Section 6.2.1.

SECTION 6.0 AGREEMENT AWARD AND EXECUTION

6.1 No Obligation to Award

GDOT shall be under no obligation to award the Project to any Proposer or to award the Project.

6.2 Award and Execution

Unless GDOT rejects all Proposals or cancels this procurement, GDOT shall select as the Apparent Successful Proposer the Proposer submitting the lowest-price responsive Proposal, taking into consideration the evaluation criteria and procedures set forth in Section 5. GDOT's selection of Apparent Successful Proposer with respect to the Project shall be deemed to have occurred upon public notification of such selection.

Following such selection of Apparent Successful Proposer, GDOT and the Apparent Successful Proposer shall finalize the executable versions of the DB Documents, filling in blanks and inserting information that the forms of the DB Documents indicate is required from the Proposal. By submitting its Proposal, each Proposer commits to enter into the form of DB Documents included in the RFP, without variation, except as provided in this paragraph.

Upon completion of all negotiations and execution of all DB Documents and issuance of NTP 1, GDOT intends to post the executed DB Documents to the GDOT Design-Build webpage.

6.2.1 Delivery of Drafts, Execution of DB Documents

(a) Within three Business Days following Letting, all Proposers, including the Apparent Successful Proposer, shall provide a completed Form E (Construction Contractors Bid Opportunity List) in accordance with ITP Exhibit B.2.1.5.

(b) Within 10 days following the posting of the Notice of Award on the Georgia Procurement Registry, the Apparent Successful Proposer shall provide the following:

i. Escrow Bid Documentation to GDOT's authorized representative in a container suitable for sealing in accordance with Exhibit 24;

ii. Specimens of the Insurance Policies required under the Agreement for GDOT's review and approval;

iii. Notification to GDOT in writing of the:

a. name and email address of the officer of the company who will sign the contract;

b. company E-Verify number;

c. name of Proposer's surety company (if more than one surety, submit all names and identify which is the controlling surety); and

d. name, email address and telephone number of Proposer's Bonding Agent who will execute as Attorney In Fact on behalf of the surety company.

iv. If the Apparent Successful Proposer is a Joint Venture, Partnership, or single purpose entity; notify GDOT in writing of the name and address of the attorney

that will provide the legal opinions set forth on Form S. Such opinion letter may be rendered by in-house or outside counsel, provided that (i) the organization/authorization/execution opinion shall be provided by an attorney licensed in the state of the formation/organization of the entity for which the opinion is rendered (i.e., Design-Build Team, joint venture member, etc.), (ii) the qualification to do business in Georgia and the enforceability opinion shall be provided by an attorney licensed in the state of Georgia, provided, however, that the organization, authorization, or execution opinion for an entity formed or organized under the laws of the state of Delaware may be issued by an in-house or outside counsel duly licensed elsewhere; and

v. if the Apparent Successful Proposer is a Joint Venture, Partnership, or single purpose entity; provide draft legal opinions (consistent with Form S) to GDOT for GDOT's review and approval, not to be unreasonably withheld.

(c) Within 45 days following the posting of the Notice of Award on the Georgia Procurement Registry, such Apparent Successful Proposer shall provide the following:

i. Notification to GDOT in writing of the Proposer's Federal Internal Revenue Service Employer Identification Number.

ii. Notification to GDOT in writing of the name and address of its Georgia registered agent for service of legal process. The Proposer shall not change this authorized agent without prior written notice to GDOT.

iii. Evidence of insurance required to be provided by the DB Team under the DB Documents.

iv. If the Apparent Successful Proposer is a Joint Venture, Partnership, or single purpose entity; then deliver concurrently with the DB Team's execution of the DB Documents the final opinion letter. Prior to GDOT's execution of the DB Documents, the Design-Build Team will provide to GDOT the legal opinion in the form, and from the counsel, previously approved by GDOT.

v. If applicable, complete the establishment of the single purpose entity for the Project and submit certified copies of the single purpose entity-related documents to GDOT as described in Section 1.12.

Should the Apparent Successful Proposer fail to comply with any of the requirements in this Section 6.2.1, GDOT may, in its sole discretion, call upon the Apparent Successful Proposer Proposal Bond in its entirety, provided that Proposer's time period to satisfy the requirements of this Section 6.2.1 shall be extended by the period of delay in the Proposer's ability to execute the Agreement solely and directly caused by the issuance of a temporary restraining order or other form of injunction by a court with jurisdiction that prohibits prosecution of any portion of the Project.

The Proposer acknowledges that the forfeiture of the Proposal Bond constitutes liquidated damages and is not a penalty, and the amount forfeited is fair and reasonable and such payment represents a reasonable estimate of fair compensation to GDOT for the work required to procure the Project and the reputational losses which may accrue.

It is contemplated that GDOT will execute the DB Documents no later than 90 days after selection of the Apparent Successful Proposer, subject to such Apparent Successful Proposer's compliance with the terms of this Section 6.2.1.

GDOT will route the DB Documents including the P&P Bonds to the Apparent Successful Proposer for execution via DocuSign®. The Apparent Successful Proposer shall provide GDOT the Surety's Power of Attorney upon executing the DB Documents in DocuSign® with a hard copy to follow within five Business Days.

6.2.2 Initial Successful Proposer's Failure to Comply

If the initial Apparent Successful Proposer fails to comply with the requirements of Section 6.2.1, GDOT may (in its sole discretion) award the DB Documents to the Proposer whose Proposal was the next highest rated; cancel the procurement, re-advertise and complete the work under a different contract; cancel the Project; or pursue any other option it chooses.

6.3 Reserved

6.4 Debriefing of Unsuccessful Proposers

GDOT shall debrief unsuccessful Proposers upon their written request submitted to the Contracting Officer within 30 calendar days of GDOT's posting of the Notice of Award to the Georgia Procurement Registry. Email requests are considered acceptable.

GDOT will prepare a summary of the requesting Proposer's relevant evaluation information and GDOT will provide the information in writing to the requesting Proposer within 30 calendar days after GDOT's issuance of the Project's NTP 1.

After receipt of the written debriefing information, an unsuccessful Proposer may request a debriefing meeting in accordance with GDOT's Design-Build Manual.

6.5 Bid Protest Procedures

Each DB Team, by submitting its Proposal, expressly recognizes the limitation on its rights to protest contained herein, expressly waives all other rights and remedies, and agrees that the decision on any protest, as provided herein, will be final and conclusive. These provisions are included in the RFP expressly in consideration for such waiver and agreement by the DB Team. If a DB Team disregards, disputes, or does not follow the exclusive protest remedies set forth in the RFP, it shall indemnify, defend, and hold harmless GDOT and its respective directors, officers, officials, employees, agents, representatives, advisors and consultants from and against all liabilities, expenses, costs (including attorneys' fees and costs), fees, and damages incurred or suffered as a result of such DB Team's actions. The submission of a Proposal by the DB Team shall be deemed DB Team's irrevocable and unconditional agreement with such indemnification obligation.

Notwithstanding the existence of a protest, GDOT may, in its sole discretion, continue the procurement process or any portion thereof.

If a DB Team elects to protest the bid for this project, as permitted, the DB Team shall submit to the GDOT in writing, signed by a company officer authorized to sign contracts on behalf of the DB Team within the filing period.

At a minimum, the protest must include the following:

(a) the name and address of the Proposer submitting the bid protest;

(b) a statement of grounds for the protest and its factual basis;

(c) supporting exhibits, evidence, or documents to substantiate any claims unless not available within the filing time (in which case the DB Team must proceed to file the protest within the filing period, but state the expected availability of the material supporting its claim); and

(d) the desired remedy.

The DB Team is required to identify all grounds for protest during the protest filing period. GDOT, at its discretion, may deem issues not raised in the protest filing period as voluntarily relinquished by the protesting DB Team. After the protest filing period expires, any grounds for protest voluntarily relinquished by the protesting DB Team may not be introduced by the protesting DB Team at any time during the protest process or any subsequent litigation.

The DB Team shall label all packages comprising its bid protest as follows:

The SR 53 Westbound at Chattahoochee River Bridge Replacement Project

Bid Protests shall be delivered no later than 30 calendar days at 11:00 AM from Project letting to:

Georgia Department of Transportation
Attention: Rick Merritt
Office of Innovative Delivery / P3 Division
One Georgia Center, 19th Floor
600 West Peachtree Street, NW
Atlanta, Georgia 30308

GDOT shall issue a written decision on the protest within 30 days of the submittal of the protest, and the decision shall be final, conclusive and non-appealable.

SECTION 7.0 NON-RESPONSIVE TECHNICAL PROPOSAL PROCEDURES

7.1 GDOT's Responsibilities

In the event GDOT deems a Proposer's Technical Proposal non-responsive, GDOT shall, within two Business Days of such determination, provide each non-responsive Proposer a written explanation as to the reason(s) that their Technical Proposal was deemed non-responsive. An email is considered a proper written notification.

7.2 Proposer's Responsibilities

Upon receipt of GDOT's written explanation, the Proposer shall have five Business Days to request GDOT reconsider the non-responsiveness determination. The Proposer's request shall be in writing to the Contracting Officer; shall clearly state the reasons the Proposer believes that GDOT's determination is in error; and shall include supporting documentation as the Proposer deems appropriate.

7.3 Technical Proposal Resolution

Upon GDOT's receipt of a Proposer's written request for reconsideration of the non-responsiveness determination, GDOT will respond in writing within three Business Days with a final determination or an estimate of when a final determination will be made.

7.4 Time Frames

The time frames included are approximate, and may be modified by GDOT.

7.5 Costs and Damages

All costs for requests for GDOT to reconsider the non-responsiveness determination shall be the responsibility of the Proposer and shall be undertaken at the Proposer's expense.

SECTION 8.0 GDOT'S RIGHTS AND DISCLAIMERS

8.1 GDOT's Rights

In connection with this procurement, GDOT reserves to itself all rights (which rights shall be exercisable by GDOT in its sole discretion) available to it under applicable law, including without limitation, with or without cause, and with or without notice, the right to:

(a) Develop the Project in any manner that it, in its sole discretion, deems necessary. If GDOT does not execute the Agreement with the Proposer that submitted the Apparent Successful Proposal, GDOT may proceed to the next lowest Price Proposal, terminate this procurement and pursue other development or solicitations relating to the Project, or exercise such other rights under the provisions of State law as it deems appropriate;

(b) Investigate the qualifications of any Proposer under consideration, require confirmation of information furnished by a Proposer, require additional information concerning a Proposer's Proposal, require additional evidence of qualifications to perform the Work, and seek or obtain data from any source that has the potential to improve the understanding and evaluation of the Proposals;

(c) Reject all Proposals;

(d) Reject any Proposals received for non-responsiveness to or non-compliance with the RFP requirements;

(e) Issue a new RFP;

(f) Cancel, modify, or withdraw the RFP in whole or in part at any time prior to the execution of the DB Documents, including adding or deleting Proposer responsibilities contained in the RFP;

(g) Modify all dates set or projected in the RFP, including this ITP;

(h) Issue Amendments;

(i) Disqualify any Proposer who changes its Proposal, members of its team or Key Personnel without GDOT approval;

(j) Review Proposals for adequate DBE participation to include review and analysis of the Proposers DBE Plan to ensure that appropriate goal attainment and good faith effort considerations are contained within the Proposal and that those considerations contemplate the utilization of DBE firms throughout the life of the Project in both the preconstruction and construction phases;

(k) Appoint evaluation committees to review Proposals and seek the assistance of outside technical experts and consultants in evaluating the Proposals;

(l) Accept and review non-conforming Proposals or seek and receive clarifications or supplements to a Proposal;

(m) Waive minor irregularities in Proposals. Minor irregularities are defined as those that will not have an adverse effect on GDOT's interest and will not give a Proposer an advantage or benefit not enjoyed by other Proposers;

(n) Suspend and terminate the procurement at any time; and/or

(o) Exercise any other right reserved or afforded to GDOT under this ITP and applicable law.

8.2 Disclaimers

The RFP does not commit GDOT to enter into an Agreement, nor does it obligate GDOT to pay for any costs incurred in preparation and submission of Proposal(s) or in anticipation of the DB Documents. By submitting a Proposal, a Proposer disclaims any right to be paid for such costs.

In no event shall GDOT be bound by, or be liable for, any obligations regarding the Work or the Project until such time (if at all) as the DB Documents have been executed, authorized and delivered. In submitting a Proposal in response to the RFP, the Proposer is specifically acknowledging these disclaimers.

EXHIBIT A

ACRONYMS AND DEFINITIONS

Refer to Volume 1, Exhibit 1 of the RFP.

EXHIBIT B

ADMINISTRATIVE INFORMATION SUBMITTALS REQUIREMENTS

B.1 General Instructions

This Exhibit B describes the required information and submission format regarding Administrative Information Submittals. Proposers shall submit the administrative information required by this Exhibit B, separated and labeled appropriately. **See Section B.3 regarding information on how to include the Technical Proposal with the Administrative Information Submittals.**

B.2 Contents of the Administrative Information Submittals

Proposers are to provide all information set out in this Exhibit B. Note that Form E is to be submitted separately within three Business Days following Letting.

The Administrative Information Submittals shall consist of the following major elements: Proposer information, certifications and documents (including required forms).

B.2.1. Proposer Information, Certifications and Documents

B.2.1.1 List of Confidential, Trade Secret or Proprietary Information (if Applicable)

If deemed applicable by the Proposer, the Proposal shall include a page executed by the Proposer that sets forth the specific items the Proposer deems confidential, trade secret, or proprietary information protected from public disclosure under the Open Government Laws, in accordance with Section 4.2 of the ITP.

B.2.1.2 Proposal Letter – Form A

The Proposal shall include the Proposal Letter (Form A). The Proposer shall attach to the Proposal Letter evidence of authorization to execute and deliver the Proposal and the DBA, shall identify its authorized representative(s) and shall include all necessary authorization documents (as requested in the Proposal Letter – Form A). Note that additional requirements applicable to single purpose entities and joint ventures are included in Form A.

B.2.1.3 Non-Collusion Affidavit – Form B

The Proposal shall include Form B, certifying that the Proposal is not the result of and has not been influenced by collusion. Note that multiple parties are required to execute copies of Form B.

B.2.1.4 Conflict of Interest Disclosure Statement – Form C

Pursuant to Section 1.6.3, the Proposal shall include a certification on Form C describing potential organizational conflicts of interest, including disclosure of all relevant facts concerning any past, present, or currently planned interest that may

present an organizational conflict of interest. Note that multiple parties are required to execute copies of Form C.

B.2.1.5 Construction Contractors Bid Opportunity List – Form E

All Proposers shall submit a completed Construction Contractors Bid Opportunity List as specified in Form E detailing a listing of all firms participating or attempting to participate, on this Project, within three Business Days following Letting.

B.2.1.6 Participating Members, Contractors and Key Personnel Commitment – Form G

A. The Proposal shall include a completed Form G confirming the identity, current availability and commitment to the Project of the Participating Members, Major Non-Participating Members and Key Personnel that were listed by the Proposer in the SOQ.

B. The Proposal shall include a completed Form G confirming the identity, current availability and commitment to the Project of the Participating Members, Major Non-Participating Members and Key Personnel per changes in accordance with Section 2.7 of the ITP and the subsequent approval in writing by GDOT.

B.2.1.7 Equal Employment Opportunity Certification – Form H

The Proposal shall include an executed copy of Form H, regarding participation in contracts subject to federal equal employment opportunity requirements. Note that multiple parties are required to execute copies of Form H.

B.2.1.8 Buy America Certification – Form J

The Proposal shall include an executed copy of Form J, regarding federal “Buy America” requirements.

B.2.1.9 Use of Contract Funds for Lobbying Certification – Form K

The Proposal shall include an executed copy of Form K, regarding use of contract funds for lobbying.

B.2.1.10 Debarment and Suspension Certification – Form L

The Proposal shall include an executed copy of Form L, regarding debarment and suspension of contractors.

B.2.1.11 Reserved

B.2.1.12 Georgia Immigration Security and Compliance Act Affidavit – Form R

The Proposal shall include an executed copy of Form R, regarding participation in the Employment Eligibility Verification Program.

B.2.1.13 Drug Free Workplace – Form T

The Proposal shall include an executed copy of Form T, regarding Drug Free Workplace. Note that multiple parties are required to execute copies of Form T.

B.2.1.14 Changes in Proposer's Organization

The Proposal shall include a copy of the letter(s) (if any) issued by GDOT approving changes to the composition of a Proposer's team (including additions to a Proposer team) or the percentage of equity participation of one or more Participating Members of a team that is a consortium, partnership or joint venture following GDOT's decision to shortlist a Proposer. Such approval is required under Section 2.7 of the ITP. If a Proposer includes any such letter(s), it shall also include a brief description (two-page maximum) of these changes.

B.2.1.15 Draft Single Purpose Entity Corporate Formation Documents

If Proposer contemplates the creation of one or more single purpose entities as the party to execute the DB Documents, the Proposal shall include a statement acknowledging that the organizational documents for the single purpose entity(ies) will be provided in accordance with Section 6.2.1 of the ITP and the Proposal shall include applicable draft documents for such entity.

B.2.1.16 Executed Copy of Partnering/Consortium Agreement

If the Proposer is a consortium, partnership or any other form of joint venture, the Proposal shall contain an executed teaming agreement or, if the entities making up the Proposer have not executed a teaming agreement, a summary of the key terms of the anticipated agreement.

B.3 Technical Proposal

The Technical Proposal (refer to Sections 4.2.2, Section 4.2.4, and Exhibit C) shall be included with the Administrative Submittals Information.

B.4 No Contract Sum Information

NO PART OF THE ADMINISTRATIVE INFORMATION (INCLUDING, WITHOUT LIMITATION, DELIVERABLES UNDER SECTIONS B.2.1.14 OR B.2.1.15) SHOULD CONTAIN THE PROPOSER'S PROPOSED CONTRACT SUM OR OTHER INFORMATION THAT WOULD ALLOW SUCH CONTRACT SUM TO BE CALCULATED.

EXHIBIT C

TECHNICAL PROPOSAL SUBMITTAL REQUIREMENTS

The Proposer shall submit the brief Technical Proposal in accordance with this Exhibit C. The Technical Proposal shall be included within the Administrative Information Submittals package, and labeled appropriately and organized. Proposers shall not amend the order or change the section headings. The Technical Proposal shall be limited to an aggregate of five pages, not including Form M.

The organization chart and high-level Proposal Schedule output shall be submitted on 11"X17" sheets, one-sided only. Each one-sided 11"X17" sheet will be counted as one page. Tri-fold each 11"X17" sheet to a finished size of 8-1/2"X11".

All other pages shall be on 8-1/2"X11" sheets. Any side of any sheet containing printed material will be counted as one page.

Dividing sheets and tabs will not count toward the maximum page limit, provided they do not include any additional qualitative information for the Proposal.

C.1 Technical Proposal

The Technical Proposal shall include the following:

C.1.1. Construction Staging and Traffic Management Narrative

Provide a brief Construction Staging and Traffic Management narrative addressing the approach to accommodate and minimize impacts to traffic during construction. The narrative shall discuss:

(a) How the construction phasing will be accomplished, identifying the most significant known and anticipated Project challenges (no more than five) to the construction phasing and how they will be addressed, and the overall traffic management and control and sequencing approach.

(b) Approach to minimizing impacts and minimizing user distraction to the traveling public, public recreational users, and stakeholders from work areas, sequencing of work, and locations of lay down areas.

(c) Indicate how Proposer's approach to design and construction of the Project differs materially from the design indicated in any of the RIDs. Include Schematic Plans of the Project with these differences clearly identified. Schematic Plans of the Project will not count towards the Proposal page limit.

C.1.2. Project Management Approach

Provide a narrative describing the overall management approach and how the Proposer plans to address continuity of Work. Provide an organization chart (on one 11-inch-by-17-inch sheet) of the Proposer's project management organization, including the design, construction, maintenance during construction, and quality organization.

Identify all Key Personnel and other required personnel (at a minimum those listed in the Proposer's SOQ).

C.1.3. Proposal Schedule

Provide a high-level Proposal Schedule summary output (on maximum of two 11"X17" sheets) that identifies:

(a) Major design activities.

(b) Major construction activities.

(c) Permit and/or environmental related work restrictions.

(d) Other activities and/or restrictions that the Proposer chooses to identify.

Show NTP 1 as the initial activity. Assume NTP 1 occurs 90 days after Letting (Selection of Apparent Successful Proposer) for purposes of the Proposal Schedule only.

C.2 Closure Durations, Interim Completion, Substantial Completion, and Final Acceptance Proposal - Form M

Form M indicates the duration in (calendar) days from NTP 1 for each Completion Deadline, including proposed Interim Completion Deadlines, if applicable. Include a signed Form M. Form M will not count towards the Technical Proposal page limit.

C.3 No Contract Sum Information

NO PART OF THE TECHNICAL PROPOSAL, INCLUDING THE PROPOSAL SCHEDULE, SHOULD CONTAIN THE PROPOSER'S PROPOSED CONTRACT SUM OR OTHER INFORMATION THAT WOULD ALLOW SUCH CONTRACT SUM TO BE CALCULATED.

EXHIBIT D

PRICE PROPOSAL AND PROPOSAL BOND SUBMITTAL REQUIREMENTS

The Proposer shall submit the Price Proposal in accordance with this Exhibit D. The Price Proposal shall be separated and labeled appropriately and organized in accordance with the following requirements.

D.1 General Instructions

This Exhibit D describes the required information and submission format for the Price Proposal.

The Proposer shall submit the information required by this Exhibit D in the format specified herein. The Proposer shall not amend the order or change the section headings. Each component of the Price Proposal shall be clearly titled and identified.

All Forms named herein are attached to the ITP. All blank spaces in the Proposal Forms must be filled in as appropriate. No substantive change shall be made in the Proposal Forms.

The Proposer shall indicate their Proposal Price as indicated on Form F.

D.2 Format of Price Proposal

All financial information provided in the Price Proposal shall be in U.S. Dollar currency only and all amounts shall be clearly identified as nominal dollars.

If there are any discrepancies between the hard copy and electronic copy of any non-sealed information provided in the Price Proposal, the hard copy version will prevail. If there are any differences between the sum of the individual line amounts and totals, the individual line amounts will prevail.

If required due to the Proposer being a single purpose entity or Joint Venture, Financial Statements and Financial Capacity Information shall be submitted in a separate binder in accordance with Sections D.3.1 and Section D.3.2 below.

ALL OTHER REQUIREMENTS OF EXHIBIT D SHALL BE SUBMITTED IN A SEPARATE SEALED ENVELOPE OR PACKAGE WITH A LABEL CONTAINING ONLY THE NAME OF THE PROPOSER AND "EEXHIBIT D - PRICE PROPOSAL". NO OTHER PART OF THE PROPOSAL SHOULD CONTAIN THE PROPOSER'S PROPOSED CONTRACT SUM OR OTHER INFORMATION THAT WOULD ALLOW SUCH CONTRACT SUM TO BE CALCULATED.

D.3 Contents of Price Proposal

D.3.1. Financial Statements (For Single Purpose Entities or Joint Ventures Only)

Subject to Section D.3.2(b) below, the Price Proposal shall include electronic financial statements to the extent available for the Proposer, the Participating Members, and, if applicable, any joint venturers which include Major Non-Participating Members, for all

periods subsequent to those statements previously submitted to GDOT during the procurement process.

These subsequent statements must be audited by a certified public accountant in accordance with U.S. Generally Accepted Accounting Standards (GAAP), International Financial Reporting Standards (IFRS) or accompanied by a letter in the form specified in paragraph (f) below.

Financial statements shall be provided in U.S. Dollars where practicable, but financial statements in other currencies will be allowed if the conversion rates for each exhibit are clearly stated and can be confirmed. If audited financial statements are not available for a Participating Member or Major Non-Participating Member, the Proposal shall include unaudited financials for such member, certified as true, correct and complete by the chief financial officer or treasurer of the entity.

If audited financial statements are not available, the Proposal shall include unaudited financial statements for such entity, certified as true, correct and accurate by the chief financial officer or treasurer of the entity.

The financial statements, whether for the most recent completed fiscal year or for the period since the most recent completed fiscal year, must include the following:

(a) Opinion Letter (Auditor's Report).

(b) Balance Sheet.

(c) Income Statement.

(d) Statement of Changes in Cash Flow.

(e) Notes to the financial statements.

(f) If financial statements are prepared in accordance with principles other than U.S. GAAP or IFRS, a letter must be provided from the certified public accountant of the applicable entity, addressing the areas of the financial statements that would be affected by a conversion to U.S. GAAP or IFRS, and the financial impact thereof. A restatement of the financial information in U.S. GAAP or IFRS is not required.

D.3.2. Other Financial Capacity Information (For Single Purpose Entities or Joint Ventures Only)

(a) **Newly Formed Entity** - If the Proposer is a newly formed entity and does not have independent financial statements, financial statements for the Participating Members and Major Non-Participating Members (if any) and, if applicable, any joint ventures making up the Major Non-Participating Members, shall be sufficient (and the Proposer shall expressly state that the Proposer is a newly formed entity and does not have independent financial statements – but shall nonetheless provide sufficient background information on such entity – i.e. organizational, legal, ownership structure, initial funding, purpose, etc.).

(b) **SEC Filings** - If any other entity for whom financial information is submitted hereby files reports with the Securities and Exchange Commission, then such

reports shall be provided through a copy of their annual report on Form 10-K. Also, for all subsequent quarters, provide a copy of any report filed on Form 10-Q or Form 8-K which has been filed since the latest filed 10-K. If any of these reports have previously been submitted to GDOT during the procurement process, they are not required to be resubmitted.

(c) **Credit Ratings** - Credit ratings must be supplied for the Proposer, each Participating Members, each Major Non-Participating Members (if any), each joint venturer making up the Major Non-Participating Members (if applicable) and each Guarantor, to the extent such entities have credit ratings. If no credit ratings exist, include a statement specifying that no credit ratings exist for that entity. If the ratings have been submitted and not changed (and there has not been a change on the rating outlook either, i.e. positive, neutral or negative), there is no need to resubmit.

(d) **Material Changes in Financial Condition -** A letter from the chief financial officer ("CFO") or treasurer of the Proposer, each Participating Member, each Major Non-Participating Member (if any), each joint venturer making up the Major Non-Participating Members (if applicable) and each Guarantor, in each case providing information on any material changes in financial condition of such entity and, if applicable, its direct or indirect parent entities, since submission of the SOQs and those that are pending. Additionally, Proposers shall be required to provide updated financial information following the Proposal Due Date if the dissemination of such information is permitted by law.

At the discretion of GDOT, any failure to disclose a prior or pending material change may result in disqualification from further participation in the selection process. In instances where a material change has occurred, or is anticipated, the affected entity shall provide a statement describing each material change in detail, the likelihood that the developments will continue during the period of performance of the project development, and the projected full extent of the changes likely to be experienced in the periods ahead. Estimates of the impact on revenues, expenses and the change in equity shall be provided separately for each material change as certified by the CFO or treasurer. References to the notes in the financial statements are not sufficient to address the requirement to discuss the impact of material changes. The affected entity shall also provide a discussion of measures that would be undertaken to insulate the project from any recent material adverse changes, and those currently in progress or reasonably anticipated in the future. If the financial statements indicate that expenses and losses exceed income in the periods between submission of the SOQs and the most recent completed periods (even if there has not been a material change), the affected entity shall provide a discussion of measures that will be undertaken to make the entity profitable in the future and an estimate of when the entity will be profitable.

The following list identifies certain items that GDOT would consider a material change in financial condition. This list is intended to be indicative only.

List of Indicative Material Changes:

i. An event of default or bankruptcy involving the affected entity, a related business unit within the same corporation, or the parent corporation of the affected entity.

ii. A downward change in tangible net worth of 10% of shareholder equity.

iii. A sale, merger or acquisition exceeding 10% of the value of shareholder equity prior to the sale, merger or acquisition which in any way involves the affected entity, a related business unit, or parent corporation of the affected entity.

iv. A downward change in credit rating for the affected entity, a related business unit, or parent corporation of the affected entity.

v. Inability to meet conditions of loan or debt covenants by the affected entity, a related business unit or parent corporation of the affected entity which has required or will require a waiver or modification of agreed loan stipulations, or additional credit support from shareholders or other third parties.

vi. The affected entity, a related business unit in the same corporation, or the parent corporation of the affected entity either: (i) incurred a net operating loss; (ii) sustained charges exceeding 5% of the then shareholder equity due to claims, changes in accounting, write-offs or business restructuring; or (iii) implemented a restructuring/reduction in salaried personnel exceeding 200 positions or involving the disposition of assets exceeding 10% of the then shareholder equity.

vii. Other events known to the affected entity, a related business unit or parent corporation of the affected entity which represents a material change in financial condition since submission of the SOQs or may be pending for the next reporting period.

(e) **Letter of Parent Company Support -** Where a Participating Member or Major Non-Participating Member of a Proposer team is a subsidiary of another company, provide a letter from the parent company, signed by a parent company officer, confirming their intention to support the subsidiary's participation in the Project. This letter must clearly state that the parent company will provide the financial support and human resources needed by the subsidiary to successfully carry out the Project.

(f) **Off-Balance Sheet Liabilities** - A letter from the CFO, treasurer or certified public accountant for each entity for which financial information is submitted, identifying all material off balance sheet liabilities.

(g) **Non-recourse financing -** A letter from the CFO, treasurer or certified public accountant for each entity for which financial information is submitted, identifying the amount of non-recourse financing on the balance sheet.

The information required under this Section D.3.2 shall be packaged separately for each separate entity with a cover sheet identifying the name of the organization and its role in the Proposer's organization (i.e., Participating Member).

D.3.3. Proposal Bond – Form D

The Proposal shall include a properly executed Proposal Bond in the amount described in Section 4.6 of the ITP and in the form provided in Form D (Form of Proposal Bond).

D.3.4. DBE Certification and Program Description – Form I

The Proposal shall include an executed copy of Form I confirming, among other things, that the Proposer will make a good faith effort to obtain DBE commitments equal to or exceeding the DBE participation goal in Section 1.8.

The Proposal shall also include a commitments list for the project as specified in Form I.

D.3.5. Reserved

D.3.6. Reserved

D.3.7. Contract Sum Information

THE PRICE PROPOSAL SUBMISSION INCLUDING, WITHOUT LIMITATION, COMPLETED FORM F AND FORM D

The Proposal shall include the completed Section A of Form F with respect to the Contract Sum, Proposal Schedule of Values as described in this Section D.3 and Form F itself. Such Contract Sum shall include all DB Team costs and expenses. The Proposal shall also include Form D.

D.4 Reserved

D.5 Verification

Each Proposer shall satisfy itself as to the costs and tax consequences of entering into a DBA. GDOT makes no representations or warranties, express or implied, and assumes no liability whatsoever, with respect to costs or the consequences of federal or state income tax treatment of DB Team under the DBA.

EXHIBIT E

RESERVED

EXHIBIT F

LIST OF GDOT PROJECT TEAM

A list of restricted firms (including any affiliates) include:

- Arcadis US, Inc.
- Atkins Global
- Edwards-Pitman Environmental, Inc.
- Gude Management Group
- HNTB Corporation
- RS&H, Inc.
- Southeastern Engineering, Inc.
- United Consulting, LLC

EXHIBIT G

LIST OF SHAREPOINT DOCUMENTS

Title	SharePoint Documents*	Date Issued
RFP	Request for Proposals	4/19/2019
RID	Concept_Report - Approved Concept Report	4/19/2019
RID	Design – Costing Plans, MicroStation, Survey, Hydro Report and HEC-RAS files	4/19/2019
RID	Environmental Docs - Environmental Documents and Reports	4/19/2019
RID	Geotechnical - Geotechnical and Pavement Reports	4/19/2019
RID	Historic plan – Historic Plans and Borings	4/19/2019
RID	Traffic – Traffic Assignments, Traffic Data Report Traffic Forecasting methodology and Traffic Assignment Document Approval, and ICE Waiver	4/19/2019
RID	Utilities – SUE Plans, Utility Analysis and Concept Utility Reports	4/19/2019
RID	Design – ZIP files	4/23/2019
RID	Historic Plan – ZIP files	4/23/2019
RID	Survey – Updated Survey ZIP files	4/23/2019
RID	Design – HEC-RAS files	5/8/2019
RID	MS4 – Post-Construction Stormwater Report	5/8/2019
RID	Geotech – Bridge Boring Data	5/16/2019
RID	Design – Updated Costing Plans	5/22/2019
RFP	Amendment 1	5/22/2019

*RIDs are posted to the secure SharePoint site for the Project. Each Proposer is to check the secure SharePoint site regularly for additions or revisions to the RIDs.

FORM A

Proposal Letter

PROPOSER: _____

Proposal Date: _____, 2019

Georgia Department of Transportation
One Georgia Center
600 West Peachtree Street, NW
Atlanta, Georgia 30308

The undersigned (**"Proposer"**) submits this proposal (this **"Proposal"**) in response to that certain Request for Proposals (the "**RFP**") issued by the Georgia Department of Transportation (**"GDOT"**), an agency of the State of Georgia, dated April 19, 2019, as amended, to develop the SR 53 Westbound at Chattahoochee River Bridge Replacement Project (the "**Project**"), as more specifically described herein and in the documents provided with the RFP. Initially capitalized terms not otherwise defined herein shall have the meanings set forth in the RFP.

In consideration for GDOT supplying us, at our request, with the RFP and agreeing to examine and consider this Proposal, the undersigned undertakes [jointly and severally] ***[if the Proposer is a joint venture or association other than a corporation, limited liability company or a partnership, leave in the words "jointly and severally," otherwise delete]***:

a) to keep this Proposal open for acceptance for a period of 120 Calendar days without unilaterally varying or amending its terms and without any member or partner withdrawing or any other change being made in the composition of the partnership/joint venture/limited liability company/consortium on whose behalf this Proposal is submitted, without first obtaining the prior written consent of GDOT, in GDOT's sole discretion; and

b) to provide security (including bonds and insurance) for the due performance of the Design Build Agreement (the **"DBA"**) as stipulated therein.

If selected by GDOT, the Proposer agrees to: (a) enter into the DBA and satisfy all other conditions to execute the Design-Build Documents as set forth in Section 6 of the Instructions to Proposers (**"ITP"**) included in the RFP; and (b) perform its obligations as set forth in the Design-Build Documents, including compliance with all commitments contained in this Proposal.

Enclosed, and by this reference incorporated herein and made a part of this Proposal, are the following Proposal components:

- Administrative Information Submittals;
- Technical Proposal; and
- Price Proposal

The Proposer acknowledges receipt, understanding and full consideration of the following:

- ***[list any amendments to the RFP]***

The Proposer certifies the following: the Proposal is submitted without reservation, qualification, assumptions or conditions; the Proposer has carefully examined and is fully familiar with all of the RFP documents and is satisfied that the RFP documents provide sufficient detail regarding the intended "Design-Build Team's" obligations and do not contain internal inconsistencies; the Proposer has carefully checked all the words, figures and statements in the Proposal; the Proposer has conducted such other field investigations and additional design development as is prudent and reasonable in preparing this Proposal; the Proposer has requested clarification or interpretation with respect to any perceived deficiency in or omission from the RFP documents or other documents provided by GDOT; and the Proposer has notified GDOT of any unusual site conditions observed prior to the date hereof.

By signature below and submittal of Form F with the attached Proposal Schedule and Form M with the Technical Proposal, the Proposer hereby certifies it has reviewed its Proposal Schedule and Proposal estimates for the Project and that all Work, including Early Portions of the Work, can be completed within the Milestone Deadlines, including all Interim Milestone Deadlines, Substantial Completion Deadline and Final Acceptance Deadline.

Proposer represents that all statements made in the Statement of Qualifications previously delivered to GDOT by the Proposer are true, correct and accurate as of the date hereof, except as otherwise specified in the enclosed Proposal and Proposal forms. The Proposer agrees that such Statement of Qualifications, except as modified by the enclosed Proposal and Proposal forms, is incorporated as if fully set forth herein.

The Proposer understands that GDOT is not bound to award the DBA to the Proposer submitting the Proposal with the lowest proposed bid, the highest scoring Proposal, or any Proposal GDOT may receive.

Except for any payment for Work Product paid to the Proposer in accordance with the ITP, the Proposer further understands that all costs and expenses incurred by it in preparing this Proposal and participating in the RFP process will be borne solely by the Proposer.

The Proposer acknowledges they have read and understand Exhibit 18 and the Liquidated Damages and Nonrefundable Deductions which may be imposed. The amounts of Liquidated Damages and Nonrefundable Deductions represent good faith estimates as to the actual potential damages that GDOT would incur as a result for failure to meet requirements of the Agreement with associated Liquidated Damages and Nonrefundable Deductions.

The Proposer agrees that GDOT will not be responsible for any errors, omissions, inaccuracies or incomplete statements in the Proposal.

The Proposal shall be governed by and construed in all respects according to the laws of the State of Georgia.

Proposer's business address:

_____
(No.) (Street) (Floor or Suite)

_____
(City) (State or Province) (ZIP or Postal Code) (Country)

State or Country of Incorporation/Formation/Organization: _____

[insert appropriate signature block from following pages]

1. Sample signature block for corporation or limited liability company:

[Insert the Proposer's name]

By: _____

Print Name: _____

Title: _____

2. Sample signature block for partnership or joint venture:

[Insert the Proposer's name]

By: *[Insert general partner's or member's name]*

By: _____

Print Name: _____

Title: _____

[Add signatures of additional general partners or members as appropriate]

3. Sample signature block for attorney in fact:

[Insert the Proposer's name]

By: _____

Print Name: _____
Attorney in Fact

[insert appropriate signature block from this page including additional requirements]

ADDITIONAL REQUIREMENTS FOR SINGLE PURPOSE ENTITIES AND JOINT VENTURES ONLY:

Describe in detail the legal and organizational structures of the entity (corporation, partnership, joint venture or limited liability company) making the Proposal. Include the following as applicable:

A. Provide a table or tables showing the legal and organizational structure of the anticipated Design-Build Team and any Major Non-Participating Members entity. This table shall describe the role of all Participating Members, Major Non-Participating Members, and Contractors.

B. Provide the following as noted for corporation, partnership, joint venture or limited liability company.

1. If the Proposer (or any member, partner or joint venturer of the Proposer) is a corporation or includes a corporation as a joint venturer, partner or member, provide the following:

   i. the state or country of incorporation in addition to the business address;

   ii. articles of incorporation and bylaws for the Proposer and each corporation certified by an appropriate individual; and

   iii. With respect to authorization of execution and delivery of the Proposal and validity thereof, provide evidence in the form of a resolution of its governing body certified by an appropriate officer of the corporation.

2. If the Propose (or any member, partner or joint venturer of the Proposer) is a partnership or includes a partnership as a joint venturer, partner or member, provide the following:

   i. the state or country of formation;

   ii. the full names and addresses of all partners and the equity ownership interest of each entity, provide the incorporation, formation and organizational documentation for the Proposer and each general partner (partnership agreement and certificate of partnership for a partnership, articles of incorporation and bylaws for a corporation, operating agreement for a limited liability company and joint venture agreement for a joint venture) certified by an appropriate individual; and

   iii. With respect to authorization of execution and delivery of the Proposal and validity thereof, provide evidence in the form of a partnership resolution and a general partner resolution (as to each general partner) providing such authorization, in each case, certified by an appropriate officer of the general partner.

3. If the Proposer (or any member, partner or joint venturer of the Proposer) is a joint venture or includes a joint venture as a joint venturer, partner or member, provide the following:

i. the state or country of organization;

ii. the full names and addresses of all joint venturers and the equity ownership interest of each entity, provide the incorporation, formation and organizational documentation for the Proposer and each joint venturer (partnership agreement and certificate of partnership for a partnership, articles of incorporation and bylaws for a corporation, operating agreement for a limited liability company and joint venture agreement for a joint venture) certified by an appropriate individual; and

iii. with respect to authorization or execution and delivery of the Proposal and validity thereof, provide evidence in the form of a resolution of each joint venturer, certified by an appropriate officer of such joint venturer. If the Proposer is a joint venture or a partnership, the Proposal must be executed by all joint venture members or all general partners, as applicable.

4. If the Proposer (or any member, partner or joint venturer of the Proposer) is a limited liability company or includes a limited liability company as a joint venturer, partner or member, provide the following:

i. the state or country of organization;

ii. the full names and addresses of all members and the equity ownership interest of each entity, provide the incorporation, formation and organizational documentation for the Proposer and each member (partnership agreement and certificate of partnership for a partnership, articles of incorporation and bylaws for a corporation, operating agreement for a limited liability company and joint venture) certified by an appropriate individual; and

iii. with respect to authorization of execution and delivery of the Proposal and validity thereof, provide evidence in the form of a limited liability company resolution and a managing member(s) resolution providing such authorization, certified by an appropriate officer of the managing member(s). If there is no managing member, each member shall provide the foregoing information.

iv. If the Attach evidence to the Proposal and to each letter that the person signing has authority to do so.

C. The Proposer's partnership agreement, limited liability company operating agreement, and joint venture agreement, as applicable, must include an express provision satisfactory to GDOT, in its sole discretion, stating that, in the event of a dispute between or among joint venturers, partners or members, as applicable, no joint venturer, partner or member, as applicable, shall be entitled to stop, hinder or delay work on the Project. Proposers shall submit the applicable agreement to GDOT and identify on a cover page where in the agreement the provision can be found.

FORM B

Non-Collusion Affidavit*

STATE OF _____)
)SS:
COUNTY OF _____)

Each of the undersigned, being first duly sworn, deposes and says that:

A. _____ [name] is the _____ [title] of _____ [firm] and _____ [name] is the _____ [title] of _____ [firm], which entity(ies) are the _____ [relationship to Proposer] of _____, the entity making the foregoing Proposal.

B. The Proposal is not made in the interest of, or on behalf of, any undisclosed person, partnership, company, association, organization, joint venture, limited liability company or corporation; the Proposal is genuine and not collusive or a sham; the Proposer has not directly or indirectly induced or solicited any other Proposer to put in a false or sham Proposal, and has not directly or indirectly colluded, conspired, connived or agreed with any Proposer or anyone else to put in a sham Proposal or refrained from proposing; the Proposer has not in any manner, directly or indirectly, sought by agreement, communication or conference with anyone to fix the prices of the Proposer or any other Proposer, or to fix any overhead, profit or cost element included in the Proposal, or of that of any other Proposer, or to secure any advantage against GDOT or anyone interested in the proposed DBA; all statements contained in the Proposal are true; and, further, the Proposer has not, directly or indirectly, submitted its prices or any breakdown thereof, or the contents thereof, or divulged information or data relative thereto, or paid, and will not pay, any fee to any corporation, partnership, company, association, joint venture, limited liability company, organization, Proposal depository or any member, partner, joint venture member or agent thereof to effectuate a collusive or sham Proposal.

C. The Proposer will not, directly or indirectly, divulge information or data regarding the price or other terms of its Proposal to any other Proposer, or seek to obtain information or data regarding the price or other terms of any other Proposal, until after award of the DBA or rejection of all Proposals and cancellation of the Request for Proposals.

* Initially capitalized terms not otherwise defined herein shall have the meanings ascribed thereto pursuant to the Instructions to Proposers within the Request for Proposals for the Project.

[*signature page follows*]

_____	_____
(Signature)	(Signature)
_____	_____
(Name Printed)	(Name Printed)
_____	_____
(Title)	(Title)
_____	_____
(Signature)	(Signature)
_____	_____
(Name Printed)	(Name Printed)
_____	_____
(Title)	(Title)
_____	_____
(Signature)	(Signature)
_____	_____
(Name Printed)	(Name Printed)
_____	_____
(Title)	(Title)

Subscribed and sworn to before me this __ day of _____, 20__.

_____
Notary Public in and for
said County and State

[Seal]
My commission expires: _____.

[Proposers shall duplicate or modify this form as necessary so that it accurately describes the entity making the Proposal and so that it is signed on behalf of all partners, members, joint venture members, Participating Members and Major Non-Participating Members.]

FORM C

Conflict of Interest Disclosure Statement

Proposer's Name: _____ ("Proposer")

The Proposer's attention is directed to Section 1.6.3 of the ITP regarding organizational conflicts of interest and the restrictions applicable to such conflicts. Proposers are advised that certain firms will not be allowed to participate on any Proposer's team for the SR 53 Westbound at Chattahoochee River Bridge Replacement Project (the "**Project**") because of their work with GDOT in connection with the Project procurement.*

* Initially capitalized terms not otherwise defined herein shall have the meanings ascribed thereto pursuant to the Instructions to Proposers within the Request for Proposals for the Project.

1. Required Disclosure of Conflicts

In the space provided below, and on supplemental sheets as necessary, identify all relevant facts relating to past, present, or planned interest(s) of the Proposer's team (including the Proposer, Participating Members, Major Non-Participating Members, proposed consultants and proposed subcontractors, and their respective chief executives, directors, and other key personnel for the project) which may result, or could be viewed as, an organizational conflict of interest in connection with this RFP.

For any facts relating to past, present, or planned interest(s) of the Proposer's team (including the Proposer, Participating Members, Major Non-Participating Members, proposed consultants and proposed subcontractors, and their respective chief executives, directors, and other key personnel for the project) which may result, or could be viewed as, an organizational conflict of interest in connection with this RFP, the Proposer shall disclose (a) any current contractual relationships with GDOT, (b) any past, present, or planned contractual or employment relationships with any officer or employee of GDOT, and (c) any other circumstances that might be considered to create a financial interest in the contract by any GDOT member, officer or employee, if the Proposer is awarded the DBA. The Proposer shall also disclose matters such as ownership of 10% or more of the stock of, or having directors in common with, any of the individuals or entities involved in preparing the RFP. The Proposer shall also disclose contractual relationships (i.e. joint ventures) with any of the individuals or entities involved in preparing the RFP, including those identified in ITP Exhibit G, as well as relationships wherein such individual or entity is a contractor or consultant (or subcontractor or subconsultant) to the Proposer or a member of the Proposer's team. The foregoing is provided by way of example, and shall not constitute a limitation on the disclosure obligations.

_____

_____

_____

_____

2. Explanation

In the space provided below, and on supplemental sheets as necessary, identify steps the Proposer or other entities have taken or will take to avoid, neutralize, or mitigate any organizational conflicts of interest described herein.

3. Certification

The undersigned hereby certifies that, to the best of his or her knowledge and belief, no interest exists that is required to be disclosed in this Conflict of Interest Disclosure Statement, other than as disclosed above.

_____
Signature

_____
Name

_____
Title

_____
Company Name

_____, 201_
Date

[Proposers shall duplicate or modify this form as necessary so that it accurately describes the entity making the Proposal and so that it is signed on behalf of all partners, members, joint venture members, Participating Members and Major Non-Participating Members, proposed consultants and proposed subcontractors.]

FORM D

Form of Proposal Bond

Bond No. _____

KNOW ALL PERSONS BY THESE PRESENTS, that the _____, as Principal and _____, as Surety or as Co-Sureties, each a corporation duly organized under the laws of the State indicated on the attached page, having its principal place of business at the address listed on the attached page, in the State indicated on the attached page, and authorized as a surety in the State of Georgia, are hereby jointly and severally held and firmly bound unto the Georgia Department of Transportation ("GDOT"), in the sum of five percent (5%) of the Price Proposal amount of **XXXXXXXXX United States Dollars (US $XXX,XXX,XXX)** (the "Bonded Sum"), the payment of which we each bind ourselves, and our heirs, executors, administrators, representatives, successors, and assigns, jointly and severally, firmly by these presents.

WHEREAS, the Principal is herewith submitting its Proposal to design and build SR 53 Westbound at Chattahoochee River Bridge Replacement (the "**Project**"), which Proposal is incorporated herein by this reference and has been submitted pursuant to GDOT's Request for Proposals dated as April 19, 2019 (as amended or supplemented, the "RFP");

NOW, THEREFORE, the condition of this bond is such that, upon occurrence of any of the events set forth below in subsections (a)-(c), then this obligation shall be null and void; otherwise it shall remain in full force and effect, and the Bonded Sum will be forfeited to GDOT as liquidated damages and not as a penalty, upon receipt by the Principal and Surety or by the Principal and Sureties listed on the attached page (the "Co-Sureties") of notice of such forfeiture from GDOT:

(a) The Principal's receipt of written notice from GDOT that either (i) GDOT will not award the DBA for the Project pursuant to the RFP, or (ii) GDOT has awarded the DBA for the Project, has received the executed DBA and other required documents and does not intend to award the DBA to the Principal;

(b) The Principal's performance of all of its obligations under the RFP in connection with award of the DBA; or

(c) Failure of GDOT to award the DBA to the Principal within one 120 Calendar days after the Proposal Due Date.

If the Principal shall (i) fail to promptly and properly fully satisfy on a timely basis the conditions for release set forth in (b) above (including, without limitation, any failure to comply on a timely basis with the terms of Section 5.6 of the Instructions to Proposers within the RFP (the "ITP")) or (i) withdraw its Proposal in a manner that is not permitted by the ITP, the Principal and the Surety or Co-Sureties hereby agree to pay to GDOT the full Bonded Sum herein above set forth, as liquidated damages and not as a penalty, within 10 days after such failure.

In accordance with Section 4.6 of the ITP, GDOT shall return this Proposal Bond to the Principal following GDOT's receipt from Principal of conforming Payment and Performance Bonds.

The following terms and conditions shall apply with respect to this bond:

1. If suit is brought on this bond by GDOT and judgment is recovered, the Principal and Surety or Co-Sureties shall pay all costs incurred by GDOT in bringing such suit, including, without limitation, reasonable attorneys' fees and costs as determined by the court.

2. Any extension(s) of the time for award of the DBA that the Principal may be granted in accordance with the ITP or otherwise, shall be subject to the reasonable approval of Surety or Co-Sureties.

3. The Co-Sureties agree to empower a single representative with authority to act on behalf of all of the Co-Sureties with respect to this Bond, so that Obligee will have no obligation to deal with multiple sureties hereunder. All correspondence from Obligee to the Co-Sureties and all claims under this Bond shall be sent to such designated representative. The Co-Sureties also agree to designate a single agent for service of process with respect to any actions on this Bond, which agent shall either be (a) a natural person or (b) a corporation qualified to act as an agent for service of process under Georgia law. The designated representative and agent for service of process may be changed only by delivery of written notice (by personal delivery or by certified mail, return receipt requested) to Obligee designating a single new representative and/or agent, signed by all of the Co-Sureties. The initial representative shall be:

_____

_____

_____
[name and address]

and the initial agent for service of process shall be:

_____

_____

_____
[name and address]

SIGNED and SEALED this _____ day of _____, 20__

_____
Principal

By: _____

_____
Co-Surety

By: _____
Attorney in Fact

By: _____

_____
Co-Surety

By: _____
Attorney in Fact

By: _____

_____
Co-Surety

By: _____
Attorney in Fact

[ADD APPROPRIATE SURETY ACKNOWLEDGMENTS]

CO-SURETIES

SURETY NAME	SURETY ADDRESS	INCORPORATED IN

FORM E

STATE OF GEORGIA DEPARTMENT OF TRANSPORTATION FORM EEOP

CONSTRUCTION CONTRACTORS
BID OPPORTUNITY LIST

PREQUALIFICATION OFFICE
Revised 05/16/11

This information shall be submitted within three Business Days of Letting

---

Prime Contractor/Consultant: _____
Address/Telephone Number: _____
Bid/Proposal Number: _____
Quote Submitted MM/YY: _____

49 CFR Part 26.11 requires the Georgia Department of Transportation to develop and maintain a "bid opportunity list". The list is intended to be a listing of all firms participating or attempting to participate, on DOT assisted contracts. The list must include all firms that bid on prime contracts, or bid or quote subcontracts and materials supplies on DOT-assisted projects, including both DBEs and non-DBEs. For consulting companies, this list must include all subconsultants contacting you and expressing an interest in teaming with you on a specific DOT assisted project. Prime contractors and consultants must provide information for Nos. 1, 2, 3, and 4 and must provide information they have available on Numbers 5, 5.A., 6, 7, 8 and 9 for themselves, and their subcontractors and subconsultants.

1. Federal Tax ID Number: _____
2. Firm Name: _____
3. Phone: _____
4. Address: _____

_____

5. Contact _____
5.A. Company E mail address _____

6. ☐ DBE
☐ Non-DBE
7. ☐ Subcontractor
8. ☐ Subconsultant
9. ☐ Supplier

---

1. Federal Tax ID Number: _____
2. Firm Name: _____
3. Phone: _____
4. Address: _____

_____

5. Contact _____
5.A. Company E mail address _____

6. ☐ DBE
☐ Non-DBE
7. ☐ Subcontractor
8. ☐ Subconsultant
9. ☐ Supplier

---

1. Federal Tax ID Number: _____
2. Firm Name: _____
3. Phone: _____
4. Address: _____

_____

5. Contact _____
5.A. Company E mail address _____

6. ☐ DBE
☐ Non-DBE
7. ☐ Subcontractor
8. ☐ Subconsultant
9. ☐ Supplier

FORM F
Design-Build Price Proposal

Proposer Name: _____

The Proposer shall complete the required fields of Section A below. See Exhibit D for additional explanation and requirements.

The Proposer shall indicate its proposed Contract Sum on this Form F, such Contract Sum shall include all Design-Build Team cost and expenses.

A. Proposal Schedule of Values (SOV)

All items below shall be provided as Lump Sum amounts. If there are any differences between the sum of the individual line amounts and totals, the individual line amounts will prevail.

Payment Activity Description	Scheduled Value
DESIGN	
1. Design	$
CONSTRUCTION	
1. Field Office	$
2. Work Zone Law Enforcement	$
3. Structure Demolition	$
4. Foundations	$
5. Substructure Concrete	$
6. Superstructure	$
7. Superstructure Beams	$
8. Approach Slabs	$
9. Structural Walls	$
10. Traffic Control	$
11. Erosion Control	$
12. Grading	$
13. Drainage	$
14. Barrier and Guardrail	$
15. Aggregate Base Course	$
16. Asphalt Paving	$
17. Concrete Paving	$
18. Striping and Signing	$
19. Utilities	$
20. Training Hours (5,000 hours)	$ 4,000
Subtotal CONSTRUCTION	$
MISCELLANEOUS ACTIVITIES	
1. General Conditions and Administration*	$
2. Mobilization (not including demobilization) (Not to exceed **2.5%** of DESIGN + Construction)	$
3. Record Drawings, Punch List, Demobilization, and Final Close-out (No less than **1.0%** of Design + Construction)	$
Subtotal MISCELLANEOUS ACTIVITIES	$
CONSTRUCTION COMPLETE	
Subtotal CONSTRUCTION COMPLETE (CONSTRUCTION + MISCELLANEOUS ACTIVITIES)	$
CONTRACT SUM	
CONTRACT SUM (DESIGN + CONSTRUCTION COMPLETE)	**$**

* Includes all management, management plans, payment and performance bond, insurance, project management and coordination, home office overhead and support, and quality management.

BY SIGNATURE BELOW AND SUBMITTAL OF THIS FORM F WITH THE PROPOSAL SCHEDULE, THE PROPOSER HEREBY CERTIFIES IT HAS REVIEWED ITS PROPOSAL SCHEDULE AND PROPOSAL ESTIMATES FOR THE PROJECT AND THAT ALL WORK, INCLUDING EARLY PORTIONS OF THE WORK, CAN BE COMPLETED WITHIN THE MILESTONE DEADLINES, INCLUDING ANY INTERIM COMPLETION DEADLINES, SUBSTANTIAL COMPLETION DEADLINE AND FINAL ACCEPTANCE DEADLINE.

Date: _____

Signature: _____

Design-Build Team: _____

FORM G

Form of Participating Members, Major Non-Participating Members, Contractors and Key Personnel Commitment

Proposer's Name: _____ (the "Proposer")

The Proposer hereby commits that, if awarded the SR 53 Westbound at Chattahoochee River Bridge Replacement Project (the "**Project**"), the Proposer will use the entities and individuals listed below for their stated positions and that, to the extent within the Proposer's control, such entities and individuals will be available to fulfill their Project-related responsibilities.

Lead Contractor: _____

Participating Member: _____

Lead Design Consultant: _____

Key Personnel (Participating Members and Major Non-Participating Members, as appropriate):

- **Lead Contractor Project Manager**: _____
- **Lead Design Consultant Project Manager**: _____
- **Engineer of Record**: _____
- **Contractor Superintendent**: _____
- **Construction Quality Assurance Manager**: _____

Signed: _____

Printed Name: _____

Title: _____

Date: _____

FORM H

Equal Employment Opportunity Certification

[To be executed by the Proposer, Participating Members, Major Non-Participating Members and proposed Contractors]

The undersigned certifies on behalf of _____, that:
(Name of entity making certification)

[check one of the following boxes]

☐ It has developed and has on file at each establishment affirmative action programs pursuant to 41 CFR Part 60-2 (Affirmative Action Programs).

☐ It is not subject to the requirements to develop an affirmative action program under 41 CFR Part 60-2 (Affirmative Action Programs).

[check one of the following boxes]

☐ It has not participated in a previous contract or subcontract subject to the equal opportunity clause described in Executive Orders 10925, 11114 or 11246.

☐ It has participated in a previous contract or subcontract subject to the equal opportunity clause described in Executive Orders 10925, 11114 or 11246 and, where required, it has filed with the Joint Reporting Committee, the Director of the Office of Federal Contract Compliance, a Federal Government contracting or administering agency, or the former President's Committee on Equal Employment Opportunity, all reports due under the applicable filing requirements.

Signature: _____

Title: _____

Date: _____

If not the Proposer, relationship to the Proposer:_____

Note: The above certification is required by the Equal Employment Opportunity Regulations of the Secretary of Labor (41 CFR 60-1.7(b)(1)), and must be submitted by Proposers only in connection with contracts which are subject to the equal opportunity clause. Contracts that are exempt from the equal opportunity clause are set forth in 41 CFR 60-1.5. (Generally, only contracts of $10,000 or under are exempt.)

Currently, Standard Form 100 (EEO-1) is the only report required by Executive Orders or their implementing regulations.

Proposers, Participating Members, Major Non-Participating Members or proposed Contractors who have participated in a previous contract subject to the Executive Orders and have not filed the required reports shall note that 41 CFR 60-1.7(b)(1) prevents the award of contracts and subcontracts unless such contractor submits a report covering the delinquent period or such other period specified by the Federal Highway Administration or by the Director, Office of Federal Contract Compliance, U.S. Department of Labor.

FORM I

DBE Certification

DISADVANTAGED BUSINESS ENTERPRISES REQUIREMENTS

The following Project goal for participation by DBEs is established for professional services and construction work:

DBE GOAL

8% of the overall Project design and construction costs, with respect to the race conscious participation by the Design-Build Team.

DBE Certification

By signing below, the Proposer certifies that (1) the Design-Build Team will provide a good faith effort to meet the goal; and (2) the Design-Build Team will direct its efforts toward the utilization of DBE firms in both design and construction components of the Project, (3) the Design-Build Team will submit a DBE Commitments List meeting the requirements set forth in Attachment 6 to Exhibit 8 to the DBA, (4) the Design-Build Team will submit monthly and annual summary reports of the DBE goal attainment on the Project, identifying the components of the Project on which DBE firms are/have been utilized. See the following page of this form for the Commitments List requirements.

Failure to submit the DBE Commitments List will be considered a breach of the requirements of the RFP. As a result, the Proposal Bond provided by the Proposer will become property of GDOT and the Proposer will be precluded from participating in any re-procurement of the DBA for the Project.

_____
[name]

_____
[title]

The DBE firms to be utilized as counting toward the proposed goal must be listed on this form, along with their addresses, type of work and the amount to be paid to each of the certified DBE firms. The amount entered will not necessarily be the contract amount, but must be the actual amount that will be paid to the DBE firm. In the case of a DBE supplier, the amount paid and 60% of that amount both will be entered; and only the 60% figure should be added to the total. Attach DBE Commitments List to Form I; an example of this is shown in Table I-1:

Table I-1: Example Commitments Chart

Vender Number	Company Name and Address (City and State)	Type of Work	*Work Code	Race Neutral	Race Conscious	Amount
	ABC Oil Company Atlanta, GA	Diesel Fuel Supplier				$80,000.00 (60%= $48,000.00)
TOTAL						

The Contractor shall indicate for each DBE and Type of Work whether the DBE Participant is Race Neutral or Race Conscious by placing a checkmark in the appropriate column.

PLEASE NOTE: For 60% of the amount paid to a DBE supplier to be eligible to count toward fulfilling the DBE goal, the supplier must be an established “regular dealer” in the product involved, and not just a broker. A “regular dealer” would normally sell the product to several customers and would usually have product inventory on hand.

FORM J

Buy America Certification

The undersigned Proposer hereby certifies on behalf of itself and all contractors (at all tiers) the following:

a. The Proposer shall comply with the Federal Highway Administration ("FHWA") Buy America Requirements of 23 CFR 635.410, which permits FHWA participation in the DBA only if domestic steel and iron will be used on the Project. To be considered domestic, all steel and iron used and all products manufactured from steel and iron must be produced in the United States and all manufacturing processes, including application of a coating, for these materials must occur in the United States. Coating includes all processes that protect or enhance the value of the material to which the coating is applied. This requirement does not preclude a minimal use of foreign steel and iron materials, provided the cost of such materials does not exceed 0.1% of the Contract Sum.

b. A false certification is a criminal act in violation of 18 U.S.C. 1001. Should this certification be investigated, the Proposer has the burden of proof to establish that it is in compliance.

c. At the Proposer's request, GDOT may, but is not obligated to, seek a waiver of Buy America requirements from FHWA if grounds for the waiver exist. However, the Proposer certifies that it will comply with the applicable Buy America requirements if a waiver of those requirements is not available or not pursued by GDOT.

Date: _____

Signature: _____

Title: _____

Proposer's Name: _____

FORM K

Use of Contract Funds for Lobbying Certification

The undersigned Proposer certifies on behalf of itself and all contractors (at all tiers) the following:

1. The Proposer certifies, to the best of its knowledge and belief, that:

   a. No federal appropriated funds have been paid or will be paid, by or on behalf of the undersigned, to any person for influencing or attempting to influence an officer or employee of any federal agency, a Member of Congress, an officer or employee of Congress, or an employee of a Member of Congress in connection with the awarding of any federal contract, the making of any federal grant, the making of any federal loan, the entering into of any cooperative agreement, and the extension, continuation, renewal, amendment, or modification of any federal contract, grant, loan, or cooperative agreement.

   b. If any funds (other than federal appropriated funds) received by the Proposer under the RFP or DBA have been paid or will be paid to any person for influencing or attempting to influence an officer or employee of any federal agency, a Member of Congress, an officer or employee of Congress, or an employee of a Member of Congress in connection with any federal contract, grant, loan, or cooperative agreement, the undersigned shall complete and submit Standard Form-LLL, "Disclosure Form to Report Lobbying," in accordance with its instructions, and shall include a copy of said form in its proposal or bid, or submit it with the executed DBA or any or Subcontract.

2. This certification is a material representation of fact upon which reliance was placed when this transaction was made or entered into. Submission of this certification is a prerequisite for making or entering into this transaction imposed by 31 U.S.C. 1352. Any person who fails to file the required certification shall be subject to a civil penalty of not less than $10,000 and not more than $100,000 for each such failure.

3. The Proposer shall require that the language of this certification be included in all lower tier subcontracts which exceed $100,000 and that all such recipients shall certify and disclose accordingly.

4. The undersigned certifies or affirms the truthfulness and accuracy of each statement of its certification and disclosure, if any. In addition, the undersigned understands and agrees that the provisions of 31 U.S.C. §3801, et seq., apply to this certification and disclosure, if any.

[Note: Pursuant to 31 U.S.C. §1352(c)(1)-(2)(A), any person who makes a prohibited expenditure or fails to file or amend a required certification or disclosure form shall be subject to a civil penalty of not less than $10,000 and not more than $100,000 for each expenditure or

failure.]

Date: _____

Proposer: _____

Signature: _____

Title: _____

FORM L

Debarment and Suspension Certification

The undersigned Proposer certifies on behalf of itself, and all Participating Members, Major Non-Participating Members and Contractors identified by such Proposer as of the date hereof, as follows:

The undersigned certifies to the best of its knowledge and belief, that it and its principals:

a. Are not presently debarred, suspended, proposed for debarment, declared ineligible, or voluntarily excluded from covered transactions by any federal department or agency;

b. Have not within a 3-year period preceding this proposal been convicted of or had a civil judgment rendered against them for commission of fraud or a criminal offense in connection with obtaining, attempting to obtain, or performing a public (federal, State or local) transaction or contract under a public transaction; violation of federal or State antitrust statutes or commission of embezzlement, theft, forgery, bribery, falsification or destruction of records, making false statements, or receiving stolen property;

c. Are not presently indicted for or otherwise criminally or civilly charged by a governmental entity (federal, State or local) with commission of any of the offenses enumerated in paragraph 1b of this certification; and

d. Have not within a 3-year period preceding this application/proposal had one or more public transactions (federal, State or local) terminated for cause or default.

Where the Proposer is unable to certify to any of the statements in this certification, it shall attach a certification to its proposal or bid stating that it is unable to provide the certification and explaining the reasons for such inability.

Date: _____

Proposer: _____

Signature: _____

Title: _____

FORM M

Closure Durations, Interim Completion, Substantial Completion, and Final Acceptance Proposal

Proposer Name: _____

The Proposer shall indicate acceptance of the Substantial Completion Deadline and Final Acceptance Deadline durations identified below.

Table M-1: Milestone Deadlines

Milestone Deadlines	Duration
Substantial Completion Deadline	No later than 1,095 Days after NTP 1
Final Acceptance Deadline	No later than 90 Days after Substantial Completion

Date: _____

Proposer: _____

Signature: _____

Title: _____

FORM N

RESERVED

FORM O

PAYMENT AND PERFORMANCE BOND FORM

Form O-1 Resident Contractor Payment and Performance Bond Form

Form O-2 Nonresident Contractor Payment and Performance Bond Form

Form O-1 Resident Contractor Payment and Performance Bond Form

DEPARTMENT OF TRANSPORTATION
PERFORMANCE AND PAYMENT BONDS
(GEORGIA RESIDENT CONTRACTOR)

KNOW ALL MEN BY THESE PRESENTS, That we,

[name of contractor]
GA

as Principal, and the Corporation or Corporations hereinafter designated as Surety A or Surety A to Surety ___ inclusive, as Surety or Sureties, are held and firmly bound, both "jointly and severally" as well as "severally" only, unto the Department of Transportation in the penal sum of 120% of the Original Contract Amount of:

[fill in written contract amount and then numeric contract amount e.g., One Thousand Dollars $1,000.00]

for the use of the obligee herein named and of all persons doing work or furnishing skill, tools, machinery, or materials under or for the purpose of this contract hereinafter described; Provided, that it is mutually understood and agreed between the Principal and Surety and/or Sureties and the Obligee herein named that this bond is to be construed as being in compliance with and subject to the provisions of Sections 13-10-1 and 36-82-101 of the Official Code of Georgia Annotated, as well as the other applicable provisions, and that in compliance with the aforesaid sections this instrument is intended and is to be construed as two separate bonds, namely, as a "performance bond" in the full penal sum heretofore set forth, and as a "payment bond", in an amount equal to 110 percent of the full penal sum heretofore named and that both bonds shall be construed to be in full force and effect at the same time, as the case may be, and that the obligations shall be several, in the full amount of said penal sum, as to each type of bond; and for the payment of which sums well and truly to be made we bind ourselves, our heirs, executors, administrators, and successors, jointly and severally, firmly by these presents; Provided, that the Sureties bind themselves in such sums "jointly and severally", as well as "severally" only for the purpose of allowing a joint action or actions against any or all of us, and for all other purposes each Surety binds itself, jointly and severally with the Principal, and with each other, for 210 percent of the penal sum of this bond, and provided further that, while each Surety binds itself, jointly and severally with the Principal, for 210 percent of the penal sum herein provided for, the total liability of all Sureties shall not exceed the total penal sum heretofore provided for as to each of the respective obligations herein provided for.

Signed and sealed this day of_____.

Surety	Name and State of incorporation	Name and Address of Bonding Agent
A		Agent Name:
B		Agent Address
C		Agent Phone Number
D		*PLEASE PRINT ALL INFORMATION*
Bond #		

Note: The Surety Company for Performance and Payment Bonds shall be a company acceptable as Surety on Federal Bonds and listed in the current Federal Register and licensed in the State of Georgia.

THE CONDITIONS OF THE FOREGOING OBLIGATIONS is such that whereas the above named Principal has entered into a contract with said Department of Transportation bearing even date herewith for the Construction of:

The replacement of the SR 53 Westbound (WB) bridge over the Chattahoochee River/Lake Lanier (Structure ID 139-0020-0). The proposed Project is located approximately 4.5 miles west of Gainesville on SR 53 in Hall County, GA. PI No. 0010212.

The surety hereby binds itself to provide performance bond and payment bond for work added by Supplemental Agreement(s) and/or Extension Agreement(s), whereby the original Contract amount or the total Project length may be increased by as much as 20 percent without the written assent of the Surety.

Now, therefore, the condition of these obligations is such that if the above named bound Principal shall in all respects comply with the terms and conditions of said contract, including all modifications or extensions thereof, and his obligations thereunder, including the notice to contractors, the plans, general conditions, specifications, special provisions and proposals, therein referred to and made a part thereof, and shall complete the said contract in accordance with its terms and shall save obligee free from all cost and charge that may accrue on account of the doing of the work specified, then this bond, construed as a "performance bond" shall be void, otherwise of full force and effect.

Provided further, that upon the failure of the said Principal to promptly and efficiently prosecute said work, in any respect, in accordance with the contract, the above bound Surety or Sureties shall take charge of said work and complete the contracts at its own expense, pursuant to its terms, receiving, however, any balance of funds in the hands of said Department of Transportation under said contract.

And, further, the condition of these obligations is such that if the above bound Principal shall make prompt payment to all subcontractors and all other persons supplying labor, materials, machinery and equipment furnished for the performance of the work provided for in said contract, as well as all duly authorized modifications thereof which may hereafter be made, including any extension of time to complete the same, then this bond, as a "payment bond", shall be void, otherwise of full force and effect.

It is agreed that, in the event that this bond is executed by more than one surety company, the term "Surety" as used in this bond shall be construed to mean any one or all of such surety companies executing this bond. It is further agreed that such surety companies herein named and executing this bond as surety for the Principal, by mutual agreement between themselves, and with the Principal, and with the obligee herein named, do hereby designate and authorize:

_____

as the "controlling surety"

It is further agreed that the term, "controlling surety", shall be defined as that one of such sureties herein designated and authorized by all of such sureties, upon whom any notice or other demand may be made by the obligee herein named, or other person having a claim against the Principal under the provisions of this bond, or with whom such obligee, or other such person, may negotiate or deal as to any matter pertaining to the obligations of this bond, and against whom any right of action growing out of this bond may be enforced, as provided for by Sections 36-82-102 through 36-82-105 of the Official Code of Georgia Annotated as fully and effectively as though the same were had or done with each of such named sureties individually, and with the right upon the part of such "controlling surety" to vouch such co-sureties into court to defend any action against it or them arising out of the obligations of this bond, as provided by Section 9-10-13 of the Official Code of Georgia Annotated, or to call upon such co-sureties, in accordance with the terms of any notice, demand, suit, suit at law, or other action, commenced or brought against it by the obligee named herein, or any other person having a claim against the Principal under the conditions and provisions of

this bond, or in accordance with any private contract between the sureties executing this bond on behalf of said Principal, it being the purpose and intent of this contract that the obligee named in this bond, or such other person having a claim under the provisions of this bond, may enforce any right that it or they may have growing out of this bond by notice, demand, negotiation, suit, or other appropriate action against the controlling surety only, and such action shall be deemed to be binding upon all the sureties named herein; Provided however, the foregoing notwithstanding, the obligee, or such other person having a claim under this bond, at its or their option, may take such action against any or all of said surety companies.

It is agreed by the parties hereto that in the event the Department of Transportation in making the contract with the Principal herein shall be acting as Agent for the United States Government, or for the Hall County(ies)

or for both, as well as for itself, then the said Department of Transportation shall have the right in the event of a breach of the contract resulting in loss to the said County or to the United States Government; or to itself, to maintain a suit hereon for the use of itself, or the United States Government, or said County as well as for itself; or said County and said United States Government shall have the right in their own names to maintain a suit herein in the same manner and to the same extent as the Department of Transportation has by virtue of Sections36-82-104 and 36-82-105 of the Official Code of Georgia Annotated.

IN WITNESS WHEREOF, the said "Authorized Signer" and the said "Surety" have duly executed this bond under seal this date_____.

Signed, Sealed, and Delivered in the presence of us.

IN WITNESS WHEREOF THE PARTIES HAVE SET THEIR HANDS AND AFFIXED THEIR SEALS

[name of contractor]

[name of surety]

_____
Signature of Contractor (SEAL)

_____
Signature of Attorney-In-Fact (SEAL)

_____
Printed Name of Signee:

_____
Printed Name of Signee:

Form O-2 Nonresident Contractor Payment and Performance Bond Form

DEPARTMENT OF TRANSPORTATION
PERFORMANCE, PAYMENT, AND NONRESIDENT
CONTRACTOR'S TAX BONDS
(NONRESIDENT CONTRACTOR)

KNOW ALL MEN BY THESE PRESENTS, That we,

[name of contractor]
[state]

as Principal, and the Corporation or Corporations hereinafter designated as Surety A or Surety A to Surety _____ inclusive, as Surety or Sureties, are held and firmly bound, both "jointly and severally" as well as "severally" only, unto the Department of Transportation in the penal sum of 120% of the Original Contract Amount of:

[fill in written contract amount and then numeric contract amount e.g., One Thousand Dollars $1,000.00]

for the use of the obligee herein named and of all persons doing work or furnishing skill, tools, machinery, or materials under or for the purpose of this contract hereinafter described, and for the use of the State and all political subdivisions thereof for all taxes (including contributions due under the employment security law), together with penalties and interest collectible as taxes, which may accrue during the period of this bond on account of the execution and performance of this contract hereinafter described; Provided, that it is mutually understood and agreed between the Principal and Surety and/or Sureties and the Obligee herein named that this bond is to be construed as being in compliance with and subject to the provisions of Sections 13-10-1, 36-82-101, and 48-13-30 through 48-13-38 of the Official Code of Georgia Annotated, as well as the other applicable provisions, and that in compliance with the aforesaid sections this instrument is intended and is to be construed as three separate bonds, namely, as a "performance bond" in the full penal sum heretofore set forth, and as a "payment bond", in the full penal sum heretofore named, and as a "tax bond" in the amount of ten percent of the full penal sum heretofore named and that all bonds shall be construed to be in full force and effect at the same time, as the case may be, and that the obligations shall be several as to each type of bond; and for the payment of which sums well and truly to be made we bind ourselves, our heirs, executors, administrators, and successors, jointly and severally, firmly by these presents; Provided, that the Sureties bind themselves in such sums "jointly and severally", as well as "severally" only for the purpose of allowing a joint action or actions against any or all of us, and for all other purposes each Surety binds itself, jointly and severally with the Principal, and with each other, for 210 percent of the penal sum of this bond, and provided further that, while each Surety binds itself, jointly and severally with the Principal, for 210 percent of penal sum herein provided for, the total liability of all Sureties shall not exceed the total penal sum heretofore provided for as to each of the respective obligations herein provided for.

Signed and sealed this day of_____.

Surety	Name and State of incorporation	Name and Address of Bonding Agent
A		Agent Name:
B		Agent Address
C		Agent Phone Number
D		*PLEASE PRINT ALL INFORMATION*
Bond #		

Note: The Surety Company for Performance and Payment Bonds shall be a company acceptable as Surety on Federal Bonds and listed in the current Federal Register and licensed in the State of Georgia.

THE CONDITIONS OF THE FOREGOING OBLIGATIONS is such that whereas the above named Principal has entered into a contract with said Department of Transportation bearing even date herewith for the Construction of:

The replacement of the SR 53 Westbound (WB) bridge over the Chattahoochee River/Lake Lanier (Structure ID 139-0020-0). The proposed Project is located approximately 4.5 miles west of Gainesville on SR 53 in Hall County, GA. PI No. 0010212.

The surety hereby binds itself to provide performance bond and payment bond for work added by Supplemental Agreement(s) and/or Extension Agreement(s), whereby the original Contract amount or the total Project length may be increased by as much as 20 percent without the written assent of the Surety.

Now, therefore, the condition of these obligations is such that if the above named bound Principal shall in all respects comply with the terms and conditions of said contract, including all modifications or extensions thereof, and his obligations thereunder, including the notice to contractors, the plans, general conditions, specifications, special provisions and proposals, therein referred to and made a part thereof, and shall complete the said contract in accordance with its terms and shall save obligee free from all cost and charge that may accrue on account of the doing of the work specified, then this bond, construed as a "performance bond" shall be void, otherwise of full force and effect.

Provided further, that upon the failure of the said Principal to promptly and efficiently prosecute said work, in any respect, in accordance with the contract, the above bound Surety or Sureties shall take charge of said work and complete the contracts at its own expense, pursuant to its terms, receiving, however, any balance of funds in the hands of said Department of Transportation under said contract.

And, further, the condition of these obligations is such that if the above bound Principal shall make prompt payment to all subcontractors and all other persons supplying labor, materials, machinery and equipment furnished for the performance of the work provided for in said contract, as well as all duly authorized modifications thereof which may hereafter be made, including any extension of time to complete the same, then this bond, as a "payment bond", shall be void, otherwise of full force and effect.

It is agreed that, in the event that this bond is executed by more than one surety company, the term "Surety" as used in this bond shall be construed to mean any one or all of such surety companies executing this bond. It is further agreed

that such surety companies herein named and executing this bond as surety for the Principal, by mutual agreement between themselves, and with the Principal, and with the obligee herein named, do hereby designate and authorize:

_____

as the "controlling surety"

It is further agreed that the term, "controlling surety", shall be defined as that one of such sureties herein designated and authorized by all of such sureties, upon whom any notice or other demand may be made by the obligee herein named, or other person having a claim against the Principal under the provisions of this bond, or with whom such obligee, or other such person, may negotiate or deal as to any matter pertaining to the obligations of this bond, and against whom any right of action growing out of this bond may be enforced, as provided for by Sections 36-82-102 through 36-82-105 of the Official Code of Georgia Annotated as fully and effectively as though the same were had or done with each of such named sureties individually, and with the right upon the part of such "controlling surety" to vouch such co-sureties into court to defend any action against it or them arising out of the obligations of this bond, as provided by Section 9-10-13 of the Official Code of Georgia Annotated, or to call upon such co-sureties, in accordance with the terms of any notice, demand, suit, suit at law, or other action, commenced or brought against it by the obligee named herein, or any other person having a claim against the Principal under the conditions and provisions of this bond, or in accordance with any private contract between the sureties executing this bond on behalf of said Principal, it being the purpose and intent of this contract that the obligee named in this bond, or such other person having a claim under the provisions of this bond, may enforce any right that it or they may have growing out of this bond by notice, demand, negotiation, suit, or other appropriate action against the controlling surety only, and such action shall be deemed to be binding upon all the sureties named herein; Provided however, the foregoing notwithstanding, the obligee, or such other person having a claim under this bond, at its or their option, may take such action against any or all of said surety companies.

It is agreed by the parties hereto that in the event the Department of Transportation in making the contract with the Principal herein shall be acting as Agent for the United States Government, or for the Hall County(ies)

or for both, as well as for itself, then the said Department of Transportation shall have the right in the event of a breach of the contract resulting in loss to the said County or to the United States Government; or to itself, to maintain a suit hereon for the use of itself, or the United States Government, or said County as well as for itself; or said County and said United States Government shall have the right in their own names to maintain a suit herein in the same manner and to the same extent as the Department of Transportation has by virtue of Sections 36-82-104 and 36-82-105 of the Official Code of Georgia Annotated.

IN WITNESS WHEREOF THE PARTIES HAVE SET THEIR HANDS AND AFFIXED THEIR SEALS

[name of contractor]

Signature of Contractor (SEAL)

Printed Name of Signee:

[name of surety]

Signature of Attorney-In-Fact (SEAL)

Printed Name of Signee:

FORM P

RESERVED

FORM Q

RESERVED

FORM R

GEORGIA SECURITY AND IMMIGRATION COMPLIANCE ACT AFFIDAVIT

Contract No. and Name:
Design-Build Agreement for the SR 53 Westbound at Chattahoochee River Bridge Replacement Project (the "**Project**")

Name of Contracting Entity: _____

By executing this affidavit, the undersigned person or entity verifies its compliance with O.C.G.A. § 13-10-91, stating affirmatively that the individual, firm, or corporation which is contracting with the Georgia Department of Transportation has registered with, is authorized to participate in, and is participating in the federal work authorization program commonly known as E-Verify,[1] in accordance with the applicable provisions and deadlines established in O.C.G.A. § 13-10-91.

The undersigned person or entity further agrees that it will continue to use the federal work authorization program throughout the contract period, and it will contract for the physical performance of services in satisfaction of such contract only with subcontractors who present an affidavit to the undersigned with the information required by O.C.G.A. § 13-10-91(b).

The undersigned person or entity further agrees to maintain records of such compliance and provide a copy of each such verification to the Georgia Department of Transportation at the time the subcontractor(s) is retained to perform such service.

_____ EEV/E-Verify™ User Identification Number	_____ Date of Authorization
_____ BY: Authorized Officer or Agent (Name of Person or Entity)	_____ Date
_____ Title of Authorized Officer or Agent	_____ Printed Name of Authorized Officer or Agent

SUBSCRIBED AND SWORN BEFORE ME ON THIS THE

____ DAY OF _____ 201__

_____
Notary Public

[NOTARY SEAL]

My Commission Expires: _____

[1] or any subsequent replacement operated by the United States Department of Homeland Security or any equivalent federal work authorization program operated by the United States Department of Homeland Security to verify Information of newly hired employees, pursuant to the Immigration Reform and Control Act of 1986 (IRCA), P.L. 99-603.

FORM S

Opinion of Counsel

[Letterhead of independent law firm or in-house counsel – See Section 6.2.1 of the ITP for legal counsel requirements- If applicable]

Mr. Matthew Cline
Georgia Department of Transportation
One Georgia Center
600 West Peachtree Street, NW
Atlanta, Georgia 30308

Re: Design-Build Agreement for the SR 53 Westbound at Chattahoochee River Bridge Replacement Project (the "**Project**")

Dear Mr. Cline**,**

This letter is provided with regard to the Design-Build Agreement dated as of _____, 2019 (the "DBA"), by and between the Georgia Department of Transportation (**"GDOT"**), an agency of the State of Georgia, and _____ (the "Design-Build Team") for the SR 53 Westbound at Chattahoochee River Bridge Replacement Project (the "**Project**").

[Describe relationship to Design-Build Team and its joint venture members, general partners, members, as applicable, and any other entities whose approval is required in order to authorize execution of the DB Documents.]

[This letter is provided to you pursuant to Section 6.2.1 of the Instructions to Proposers of that certain Request for Proposals issued by GDOT on April 19, 2019, as amended.]

In giving this opinion, we have examined _____. We have also considered such questions of law and we have examined such documents and instruments and certificates of public officials and individuals who participated in the procurement process as we have deemed necessary or advisable. *[if a certificate is used/obtained from Design-Build Team, such certificate shall also run in favor of GDOT, and shall be attached to the opinion]*

In giving this opinion, we have assumed that all items submitted to us or reviewed by us are genuine, accurate and complete, and if not originals, are true and correct copies of originals, and that all signatures on such items are genuine.

Subject to the foregoing, we are of the opinion that:

1. [opinion regarding organization/formation and existence of the Design-Build Team and that the Design-Build Team has corporate power to own its properties and assets, carry on its business, enter into the DBA and to perform its obligations under the DBA] *[if Design-Build Team is a partnership/joint venture, these opinions are also required for each of its joint venture members and general partners]*

2. [opinion regarding good standing and qualification to do business in the state of Georgia for Design-Build Team] [*if Design-Build Team is a partnership/joint venture, these opinions are also required for each of its joint venture members and general partners*]

3. [opinion that the DBA has been duly authorized by all necessary corporate action on the part of Design-Build Team and the DBA has been duly executed and delivered by Design-Build Team] *[if Design-Build Team is a partnership/joint venture, add: "and its joint venture members/general partners" after the first and second "Design-Build Team"]*

4. [opinion that the DBA constitutes a legal, valid and binding obligation of Design-Build Team enforceable against Design-Build Team in accordance with its terms] *[if Design-Build Team is a partnership/joint venture, add: "and its joint venture members/general partners" after the second "Design-Build Team"]*

5. [opinion that all required approvals have been obtained with respect to execution, delivery and performance of the DBA; and that the DBA do not conflict with any agreements to which Design-Build Team is a party *[if Design-Build Team is a partnership/joint venture, add: "and its joint venture members/general partners are a party"]* or with any orders, judgments or decrees by which Design-Build Team is bound *[if Design-Build Team is a partnership/joint venture, add: "and its joint venture members/general partners are bound"]*

6. [opinion that execution, delivery and performance of all obligations by Design-Build Team under the DBA do not conflict with, and are authorized by, the articles of incorporation and bylaws of Design-Build Team *[if Design-Build Team is a partnership, replace "articles of incorporation and bylaws" with "partnership agreement and (if applicable) certificate of limited partnership"; if Design-Build Team is a joint venture, replace "articles of incorporation and bylaws" with "joint venture agreement"; if Design-Build Team is a limited liability company, replace "articles of incorporation and bylaws" with "operating agreement and certificate of formation"]*

7. [opinion that execution and delivery by Design-Build Team of the DBA do not, and Design-Build Team's performance of its obligations under the DBA will not, violate any current statute, rule or regulation applicable to Design-Build Team or to transactions of the type contemplated by the DBA]

8. [opinion that the Design-Build Team Agreements (as applicable) have been duly authorized by all necessary corporate action on the part of Design-Build Team and such agreements have been duly executed and delivered by Design-Build Team] *[if Design-Build Team is a partnership/joint venture, add: "and its joint venture members/general partners" after the first and second "Design-Build Team"]*

9. [opinion that the Design-Build Team Agreements constitute legal, valid and binding obligations of Design-Build Team enforceable against Design-Build Team in accordance with their terms] *[if Design-Build Team is a partnership/joint venture, add: "and its joint venture members/general partners" after the second "Design-Build Team"]*

FORM T

Drug Free Workplace

STATE OF _____)
)SS:
COUNTY OF _____)

Each of the undersigned, being first duly sworn, deposes and says that:

_____ is the _____ of _____ and _____ is the _____ of _____, which entity(ies) are the _____ of _____, the entity making the foregoing Proposal.

The undersigned certifies that the provisions of Code Sections 50-24-1 through 50-24-6 of the Official Code of Georgia Annotated, relating to the "Drug-free Workplace Act", have been complied with in full.

The undersigned further certifies that:

> (1) A drug-free workplace will be provided for the Contractor's employees during the performance of the Contract; and
>
> (2) Each Contractor who hires a Subcontractor to work in a drug-free workplace shall secure from that Subcontractor the following written certification:
>
> "As part of the subcontracting agreement with (Contractor's name)_____,_____ (Subcontractor's name)_____ certifies to the Contractor that a drug free workplace will be provided for the Subcontractor's employees during the performance of this Contract pursuant to paragraph (7) of subsection (b) of Code Section 50-24-3."

Also, the undersigned further certifies that he will not engage in the unlawful manufacture, sale distribution, dispensation, possession, or use of a controlled substance or marijuana during the performance of the Contract.

[*signature page follows*]

_____	_____
(Signature)	(Signature)
_____	_____
(Name Printed)	(Name Printed)
_____	_____
(Title)	(Title)

Subscribed and sworn to before me this ___ day of _____, 201_.

_____
Notary Public in and for
said County and State

[Seal]

My commission expires: _____.

[Proposers shall duplicate or modify this form as necessary so that it accurately describes the entity making the Proposal and so that it is signed on behalf of all partners, members, joint venture members, Participating Members and Major Non-Participating Members.]

DESIGN-BUILD AGREEMENT
FOR
THE SR 53 WESTBOUND AT CHATTAHOOCHEE RIVER BRIDGE REPLACEMENT
DESIGN-BUILD PROJECT
PI No. 0010212

Between

Georgia Department of Transportation,

State of Georgia

and

_____,
a _____

TABLE OF CONTENTS

Article 1 DEFINITIONS; DB DOCUMENTS; ORDER OF PRECEDENCE; PRINCIPAL PROJECT DOCUMENTS 2
1.1 Acronyms and Definitions 2
1.2 DB Documents; Order of Precedence 2
1.3 Construction and Interpretation of the DB Documents 3
1.4 Reserved 4
1.5 Reference Information Documents 4
1.6 Errata to the GDOT Standards 4

Article 2 GRANT OF AUTHORITY AND RIGHT OF WAY 5
2.1 Grant of Authority for Undertaking 5
2.2 Right of Way; Construction Easement; Ownership 5

Article 3 CONTRACT TIME 8
3.1 Term of Agreement 8
3.2 Project Schedule 8
3.3 Contract Time, Date of Commencement, and Notice to Proceed 9

Article 4 CONTROL OF THE WORK 12
4.1 DB Team Quality Management 12
4.2 Reserved 12
4.3 Reserved 12
4.4 Limitations on DB Team's Right to Rely 12
4.5 Reserved 13
4.6 Oversight by GDOT for FHWA and Federal Compliance 13
4.7 Rights of Cooperation and Access; Increased Oversight 14
4.8 Limits of Responsibility for Oversight, Review, Recommendations, Inspection and Acts by GDOT 15

Article 5 CONTRACT SUM, PAYMENTS, AND PUBLIC FUNDS 15
5.1 Payment of Contract Sum 15
5.2 Reserved 16
5.3 Reserved 16
5.4 GDOT Monetary Obligations and Overall Limitation of Liability 16

Article 6 PROJECT PLANNING AND ACCEPTANCES; PROJECT ADMINISTRATION, REVIEW AND OVERSIGHT; PUBLIC INFORMATION 16
6.1 Preliminary Planning and Engineering Activities; Site Conditions 16
6.2 Governmental Approvals and Third-Party Agreements 17
6.3 Review and Oversight 19

Article 7 DEVELOPMENT OF THE PROJECT 23
7.1 General Obligations of DB Team 23
7.2 Performance, Design and Construction Standards 24
7.3 Design Implementation and Submittals 25
7.4 Reserved 25
7.5 Utility Adjustments 25
7.6 Conditions to Commencement of Construction Work 27

7.7 Substantial Completion, Punch List, Final Acceptance; Early Opening of Portions of the Project 28
7.8 Hazardous Materials Management 31
7.9 Environmental Compliance 31
7.10 Meetings 31
7.11 Contractor Warranties and Correction of Non-Conforming and Defective Work 32
7.12 Maintenance During Construction Work 32
7.13 For Best Value Projects Only: Impact of ATCs on the Project 33

Article 8 SECURITY AND INCIDENT RESPONSE 33
8.1 Security and Incident Response 33

Article 9 MANAGEMENT SYSTEMS AND OVERSIGHT 33
9.1 Project Management 33
9.2 Traffic Management 34

Article 10 CONTRACTING AND LABOR PRACTICES 35
10.1 Reserved 35
10.2 Responsibility for Work, Contractors and Employees 35
10.3 Reserved 36
10.4 Key Personnel 36
10.5 Reserved 37
10.6 Labor Standards 37
10.7 Reserved 37
10.8 Non-Discrimination; Equal Employment Opportunity 37
10.9 Disadvantaged Business Enterprise 38
10.10 Job Training Program 40
10.11 Prevailing Wages 41
10.12 Prompt Payment to Contractors and Pay When Paid Provisions 41
10.13 Suspension and Debarment 41
10.14 DB Team Identification 41

Article 11 RELATED AND OTHER FACILITIES 42
11.1 Integration with Related Transportation Facilities 42

Article 12 SAFETY COMPLIANCE 42
12.1 Safety Compliance 42

Article 13 GDOT CHANGES; DB TEAM CHANGES; DIRECTIVE LETTERS 44
13.1 Directive Letters 44
13.2 GDOT Changes 44
13.3 DB Team Changes 46
13.4 Final Relief Event and Compensation Event Determinations 50
13.5 Reserved 51

Article 14 RELIEF EVENTS; COMPENSATION EVENTS 51
14.1 Relief Events 51
14.2 Compensation Events 55
14.3 Lump Sum Compensation 60
14.4 Force Account Compensation 60

Article 15 REPRESENTATIONS AND COVENANTS 62
15.1 DB Team Representations and Covenants 62
15.2 GDOT Representations and Covenants 65
15.3 Survival of Representations and Covenants 66
15.4 Special Remedies for Mutual Breach of Representations and Covenants 66

Article 16 INSURANCE; PERFORMANCE SECURITY; INDEMNITY 66
16.1 Insurance Policies and Coverage 66
16.2 Performance and Payment Security 70
16.3 Prosecution of Claims 71
16.4 Reserved 72
16.5 Indemnity by DB Team 72
16.6 Defense and Indemnification Procedures 74

Article 17 DEFAULT; REMEDIES; CLAIM FOR ADJUSTMENTS AND DISPUTES 77
17.1 Default by DB Team; Cure Periods 77
17.2 Warning Notices 81
17.3 Remedies for DB Team Default 82
17.4 Liquidated Damages and Nonrefundable Deductions 90
17.5 Default by GDOT; Cure Periods 92
17.6 DB Team Remedies for GDOT Default 93
17.7 Dispute Resolution Procedures 95

Article 18 RESERVED 96

Article 19 TERMINATION 96
19.1 Termination for Convenience 96
19.2 Reserved 97
19.3 Termination for DB Team Default 97
19.4 Termination for GDOT Default, Suspension of Work, Force Majeure Event, or Materially Delayed Notice to Proceed 98
19.5 Termination Procedures and Duties 99
19.6 Reserved 101
19.7 Contracts and Agreements 101
19.8 Liability After Termination; Final Release 101
19.9 Exclusive Termination Rights 101
19.10 Access to Information 101
19.11 Termination by Court Ruling 101

Article 20 RESERVED 102

Article 21 ASSIGNMENT AND TRANSFER 102
21.1 Restrictions on Assignment, Subletting and Other Transfers 102
21.2 Standards and Procedures for GDOT Acceptance 102
21.3 Assignment by GDOT 104
21.4 Notice and Assumption 104
21.5 Change of Organization or Name 104

Article 22 RECORDS AND AUDITS; INTELLECTUAL PROPERTY 104
22.1 Maintenance and Inspection of Records 104
22.2 Audits 105

22.3 Open Government Laws and Freedom of Information Act 107
22.4 Intellectual Property 108
22.5 Reserved 110

Article 23 FEDERAL REQUIREMENTS 110
23.1 Compliance with Federal Requirements 110
23.2 Role of and Cooperation with FHWA 110

Article 24 MISCELLANEOUS 110
24.1 Taxes 110
24.2 Amendments 110
24.3 Waiver 110
24.4 Independent Contractor 111
24.5 Successors and Assigns 112
24.6 Designation of Representatives; Cooperation with Representatives 112
24.7 Survival 112
24.8 Limitation on Third-Party Beneficiaries 112
24.9 No Personal Liability of GDOT Employees; No Tort Liability 113
24.10 Governing Law 113
24.11 Notices and Communications 113
24.12 Integration of DB Documents 114
24.13 Severability 114
24.14 Usury Savings 115
24.15 Boycott of Israel 115
24.16 Entire Agreement 115
24.17 Counterparts 116

LIST OF EXHIBITS

Exhibit 1 Acronyms and Definitions

Exhibit 2 Key Personnel

Exhibit 3 Reserved

Exhibit 4 Right of Way (Existing Right of Way and Required Right of Way)

Exhibit 5 Proposal SOV

Exhibit 6 Reserved

Exhibit 7 Reserved

Exhibit 8 Federal Requirements

Exhibit 9 Milestone Deadlines

Exhibit 10 Reserved

Exhibit 11 Hazardous Materials Risk Allocation Terms

Exhibit 12 Reserved

Exhibit 13 Reserved

Exhibit 14 Design-Build Team's DBE Commitments List

Exhibit 15 Reserved

Exhibit 16 Reserved

Exhibit 17 Reserved

Exhibit 18 Measures of Liquidated Damages and Nonrefundable Deductions

Exhibit 19 Georgia Security and Immigration Compliance Act Affidavit

Exhibit 20 Terms for Termination Compensation

Exhibit 21 Non-Collusion Affidavit

Exhibit 22 Initial Designation of Authorized Representatives

Exhibit 23 Drug Free Workplace

Exhibit 24 Escrow Bid Documentation

Exhibit 25 Opinion of Counsel

VOLUMES

Volume 1 Design-Build Agreement
Volume 2 Technical Provisions for Design-Build Agreement

DESIGN-BUILD AGREEMENT
SR 53 WESTBOUND at CHATTAHOOCHEE RIVER BRIDGE REPLACEMENT PROJECT

This Design-Build Agreement for the SR 53 Westbound at Chattahoochee River Bridge Replacement Project (this "Agreement", or "DB Agreement", or the "DBA") is entered into and effective as of [Date] by and between the Georgia Department of Transportation ("GDOT"), an agency of the State of Georgia, and _____, a _____[Include if JV] [include as follows if a JV: and jointly and severally, each of (insert company name), a (insert state) limited liability company and (insert company name), a (insert state) corporation, such joint venture doing business as (insert joint venture name)] ("DB Team").

R E C I T A L S

A. Pursuant to Section 32-2-81 (c) of the Official Code of Georgia Annotated (the "Code"), GDOT is authorized to "combine any or all of the environmental services, utility relocation services, right of way services, design services, and construction phases of a public road or other transportation purpose project into a single contract using a design-build procedure."

B. Pursuant to Section 32-2-81 of the Code, "the term 'design-build procedure'" means a method of contracting under which the Department contracts with another party for the party to both design and build the structures, facilities, systems, and other items specified in the contract." GDOT "may use the design-build procedure for buildings, bridges and approaches, rail corridors, technology deployments, and limited or controlled access projects or projects that may be constructed within existing rights of way where the scope of work can be clearly defined or when a significant savings in project delivery time can be attained."

C. Pursuant to the provisions of the Code and Chapter 672-18 of the Rules of the State Department of Transportation (the "Rules"), GDOT issued a Request for Qualifications ("RFQ") on February 8, 2019, requesting submittals of a Statement of Qualifications ("SOQ") from respondents desiring to develop the SR 53 Westbound at Chattahoochee River Bridge Replacement Project (the "Project") through a Design-Build Agreement.

D. GDOT received four responsive SOQs by March 11, 2019, and subsequently shortlisted or qualified four responsive Proposers.

E. On April 19, 2019, GDOT issued to the shortlisted or qualified Proposers an RFP with respect to the Project.

F. On [Date], GDOT received responses to the RFP, including the response of DB Team (the "Proposal").

G. As part of the RFP, GDOT required that shortlisted or qualified Proposers commit to entering into an Agreement with GDOT for the design and construction of the Project.

H. GDOT evaluated and determined the DB Team was the Proposer which best met the selection criteria contained in the RFP.

NOW, THEREFORE, in consideration of the Work to be performed by DB Team, and DB Team's obligations with respect thereto, the foregoing premises and the covenants and agreements set forth herein, the Parties hereby agree as follows:

Article 1 DEFINITIONS; DB DOCUMENTS; ORDER OF PRECEDENCE; PRINCIPAL PROJECT DOCUMENTS

1.1 Acronyms and Definitions

Acronyms and definitions for certain terms used in this Agreement and the other DB Documents are contained in Exhibit 1. Other definitions may be identified within the text of the DB Documents.

1.2 DB Documents; Order of Precedence

Each of the DB Documents is an essential part of the agreement between the Parties. The DB Documents are intended to be complementary and to be read together with this Agreement as a complete agreement. Each of the DB Documents (other than this Agreement) is hereby expressly incorporated herein by reference.

1.2.1 Subject to Article 1.2.2, in the event of any conflict, ambiguity or inconsistency among the DB Documents, the order of precedence, from highest to lowest, shall be as follows:

1.2.1.1 Supplemental Agreements, Agreement amendments, and all exhibits, riders, and attachments thereto;

1.2.1.2 The Agreement (also referred to as Volume 1) and all exhibits thereto (other than Exhibit 2, Exhibit 3 and Exhibit 5);

1.2.1.3 Volume 1 Exhibit 2, Exhibit 3 and Exhibit 5;

1.2.1.4 Volume 2 "Technical Provisions for Design-Build Agreement" amendments, and all exhibits and attachments to such amendments;

1.2.1.5 Volume 2 "Technical Provisions for Design-Build Agreement", and all exhibits and attachments to the Technical Provisions;

1.2.1.6 Volume 2, Attachment 3-1 "Manuals" (Technical Documents) amendments; provided that GDOT in its sole discretion may designate that such amendments or portions thereof take precedence over the Technical Provisions to the extent provided in Article 7.2.5;

1.2.1.7 Volume 2, Attachment 3-1 "Manuals" (Technical Documents);

1.2.1.8 The DB Team's Proposal, including DB Team's Schematic Plan of Project and related Early Portions of the Work; provided that certain provisions therein shall supersede the specified provisions of the other DB Documents.

1.2.2 If the Proposal, including DB Team's Schematic Plan of Project, includes statements, offers, terms, concepts or designs that can reasonably be interpreted as offers to provide higher quality items than otherwise required by the other DB Documents or to perform services or meet standards in addition to or better than those otherwise required, or otherwise contains terms or designs which are more advantageous to GDOT than the requirements of the other DB Documents, as reasonably determined in its sole discretion by GDOT, then DB Team's obligations hereunder shall include compliance with all such statements, offers, terms, concepts and designs, which shall have the priority of Agreement amendments (Article 1.2.1.1) and Technical Provisions amendments (Article 1.2.1.4), as applicable.

1.2.3 If the DB Documents contain differing provisions on the same subject matter, the provisions that establish the higher quality manner or method of performing the Work or use more stringent standards will prevail. Additional details in a lower priority DB Document shall be given effect except to the extent they irreconcilably conflict, as determined at GDOT's sole discretion, with requirements, provisions and practices contained in the higher priority DB Document.

1.2.4 Where there is an irreconcilable conflict among any standards, criteria, requirements, conditions, procedures, specifications or other provisions applicable to the Project set forth in one or more manual(s) or publication(s) referenced within a DB Document or set of DB Documents with the same order of priority (including within documents referenced therein), the standard, criterion, requirement, condition, procedure, specification or other provision offering higher quality or better performance will apply, unless GDOT in its sole discretion approves otherwise in writing. If there is an irreconcilable conflict between manuals or publications referenced in DB Document of differing priorities, the order of precedence set forth in Article 1.2.1 will apply. If either Party becomes aware of any such conflict, it shall promptly notify the other party of the conflict in writing. If the DB Team notifies GDOT of a potential conflict, GDOT shall determine if a conflict does exist and if the order of precedence does not determine which takes precedence, GDOT shall promptly issue a written determination respecting which of the conflicting provisions is to be applied.

1.3 Construction and Interpretation of the DB Documents

1.3.1 The headers or captions of the Articles of this Agreement and Sections in the other DB Documents are for convenience only and shall not be deemed part of this Agreement or the DB Documents or considered in construing this Agreement or the DB Documents.

1.3.2 The language in all parts of the DB Documents shall in all cases be construed simply, as a whole and in accordance with its fair meaning and not strictly for or against any Party. The Parties hereto acknowledge and agree that the DB Documents are the product of an extensive and thorough, arm's length exchange of ideas, questions, answers, information and drafts during the Proposal preparation process, that each Party has been given the opportunity to independently review the DB Documents with legal counsel, and that each Party has the requisite experience and sophistication to negotiate, understand, interpret and agree to the particular language of the provisions of the DB Documents. Accordingly, in the event of an ambiguity in or Dispute regarding the interpretation of the DB Documents, the DB Documents shall not be interpreted or construed against the Party preparing it, and instead other rules of

interpretation and construction shall be utilized. GDOT's final answers to the questions posed during the Proposal preparation process for this Agreement shall in no event be deemed part of the DB Documents and shall not be relevant in interpreting the DB Documents except as they may clarify provisions otherwise considered ambiguous.

1.3.3 Reserved

1.3.4 All terms defined in the DB Documents shall be deemed to have the same meanings in all riders, exhibits, addenda, attachments or other documents affixed to or expressly incorporated by reference in this Agreement unless the context thereof clearly requires the contrary.

1.3.5 Unless otherwise stated in this Agreement or the other DB Documents, words that have well-known technical or construction industry meanings are used in this Agreement or the other DB Documents in accordance with such recognized meaning.

1.3.6 Wherever the word "including," "includes" or "include" is used in the DB Documents, it shall be deemed to be followed by the words "without limitation".

1.3.7 Wherever reference is made in the DB Documents to a particular Governmental Entity, it includes any public agency succeeding to the powers and authority of such Governmental Entity.

1.3.8 As used in this Agreement and the other DB Documents and as the context may require, the singular includes the plural and vice versa, and the masculine gender includes the feminine and vice versa.

1.4 Reserved

1.5 Reference Information Documents

1.5.1 DB Team acknowledges that GDOT has provided and disclosed to DB Team the Reference Information Documents ("RIDs"). The RIDs are not mandatory or binding on DB Team. DB Team is not entitled to rely on the RIDs as presenting design, engineering, operating or maintenance solutions or other direction, means or methods for complying with the requirements of the DB Documents, Governmental Approvals or Law.

1.5.2 Except as expressly set forth herein, DB Team acknowledges that GDOT neither represents nor warrants that the information contained in the RIDs is complete or accurate or that such information is in conformity with the requirements of the DB Documents, Governmental Approvals or Laws, and GDOT is neither responsible or liable in any respect for any causes of action, claims or Losses whatsoever suffered by DB Team or any DB Team-Related Entity by reason of any use of information contained in, or any action or forbearance in reliance on, the RIDs.

1.6 Errata to the GDOT Standards

In interpreting standards, policies and specifications referenced in the latest edition of the GDOT Standard Specifications, Construction of Transportation Systems, as well as the Manuals listed in Volume 2, Attachment 3-1, the following apply:

(a) References to the "Department" shall mean GDOT.

(b) References to the "Contractor" shall mean the DB Team.

(c) References to "Resident Engineer" or "Engineer" in the context of the provider of compliance judgment may mean the Design Quality Assurance Manager or Engineer of Record, as applicable, or it may mean a GDOT representative, or any combination thereof, depending on the context, and as determined by GDOT in its sole discretion and without recourse for the DB Team.

(d) References to the "Contract" shall mean the DB Documents.

(e) References to "plan(s)" shall mean the DB Documents.

(f) References to "The Work" shall mean the Work.

(g) Cross-references to measurement and payment provisions contained in the referenced standards, policies and specifications shall be deemed to refer to the measurement and payment provisions contained in the DB Documents.

(h) Any conflicts, ambiguities, or lack of clarity in regard to items included in the provisions, terms, or definitions used will be interpreted and defined by GDOT in its sole discretion. The DB Team shall not take advantage of any apparent conflict, omission, ambiguity, inconsistency, inaccuracy, deficiency, or inadequacy related to the application of a requirement, action to be taken, or the definition of roles and responsibilities in the execution of the Work. Should it appear that any definition of roles and responsibilities is contrary to the philosophy of those established by the Agreement, it is the responsibility of the DB Team to request a determination by GDOT related to the respective roles and responsibilities of the DB Team and GDOT.

Article 2 GRANT OF AUTHORITY AND RIGHT OF WAY

2.1 Grant of Authority for Undertaking

2.1.1 GDOT hereby grants to DB Team the revocable right, and DB Team accepts the obligation, to design and construct (including any maintenance obligations during such period as required pursuant to the DB Documents) the Project in accordance with the requirements of this Agreement and the other DB Documents.

2.2 Right of Way; Construction Easement; Ownership

2.2.1 The Project shall be constructed on and within the property as identified in the NEPA Approval and any amendment thereto (the "Property"). GDOT shall provide DB Team with access rights to the Property, together with the Existing Right of Way as set forth in this Article 2.2.

2.2.1.1 Reserved

2.2.1.2 GDOT reserves the right to enter upon, possess, control and utilize the Property with or without payment of compensation to DB Team in accordance with this Agreement.

2.2.1.3 GDOT has granted, and has further reserved the right to grant, to other parties, utility and other permits and easements and modifications thereto and rights of use to the Property subject to the limitations of the DB Documents.

2.2.2 Existing Right of Way, State Proposed/State Acquired Right of Way

2.2.2.1 Upon the terms and conditions of this Agreement, including as set forth in this Article 2.2, and subject to the terms and conditions of the DB Documents, as of the Effective Date, GDOT shall and does, subject to and upon issuance of NTP 1:

(a) grant to DB Team a non-exclusive right of access, ingress and egress (and the right to grant to DB Team-Related Entities a non-exclusive right of access, ingress and egress) to all real property comprising the Existing Right of Way as more particularly described and designated in Exhibit 4, subject to the exclusions and reservations set forth in this Agreement, in accordance with the terms described in the DB Documents, and

(b) as and to the extent that GDOT, has acquired a right of access or interest in State Proposed/State Acquired Right of Way as described and designated in Exhibit 4, grant to DB Team a non-exclusive right of access, ingress and egress (and the right to grant other DB Team-Related Entities a non-exclusive right of access, ingress and egress) to such State Proposed/State Acquired Right of Way.

2.2.2.2 DB Team represents that it has reviewed the Existing Right of Way and confirmed that the access rights to the property and timing for the grant of such rights as identified therein are sufficient and complete so as to allow DB Team access to all areas of the Property as required for the performance and completion of the Work.

2.2.3 State Proposed/DB Team Acquired Right of Way

2.2.3.1 Upon the terms and conditions of this Agreement, including as set forth in this Article 2.2, and subject to the terms and conditions of the DB Documents, as of the Effective Date, DB Team agrees to provide acquisition services set out in Section 5 of the Technical Provisions with respect to the State Proposed/DB Team Acquired Right of Way prior to the State Proposed/DB Team Acquired ROW Acquisition Date.

2.2.3.2 Except as provided in this Article 2.2.3.2 and Article 2.2.3.3, DB Team shall be responsible for its costs, expenses (other than the actual purchase prices and any relocation costs or costs to cure), and delays associated with acquiring State Proposed/DB Team Acquired Right of Way under this Agreement, including (a) the cost of acquisition services and document preparation in connection thereto, (b) the cost of providing a condemnation coordinator for twelve (12) months post filing of the condemnation petition as provided for in Section

5.12.5 of Volume 2 of the DBA, (c) the cost of permanent or temporary acquisition of leases, easement and other interests in real property, including for drainage, temporary work space, lay down areas, material storage areas, earthwork borrow sites, and any other convenience of DB Team, and (d) the processing cost of any required permitting. If GDOT incurs any such costs and expenses on DB Team's behalf, GDOT may submit any invoices for such costs and expenses to DB Team, in which case DB Team shall pay the invoices within 30 days of DB Team's receipt of such invoices. The DB Team shall not be entitled to payment or reimbursement for any costs or expenses as set forth in this Article 2.2, nor shall such costs or expenses be included on account of any Compensation Event.

2.2.3.3 GDOT shall be responsible for the purchase prices, relocation costs, costs to cure, court awards or judgments, for all parcels constituting the State Proposed/DB Team Acquired Right of Way.

2.2.3.4 If after reasonable effort the DB Team is unable to acquire the State Proposed/DB Team Acquired Right of Way, the DB Team may request that GDOT shall consider and if in agreement GDOT will undertake and complete the acquisition of State Proposed/DB Team Acquired Right of Way, subject to this Article 2.2.3, Section 5 of the Technical Provisions, and all applicable Laws relating to such acquisition, including the Uniform Act.

2.2.4 DB Team Proposed/DB Team Acquired Right of Way

2.2.4.1 DB Team is responsible for the acquisition of any DB Team Proposed/DB Team Acquired Right of Way. DB Team shall give written notice to GDOT, setting forth with specificity the legal description of any DB Team Proposed/DB Team Acquired Right of Way, within ten days of DB Team's determination of such need, including whether or not DB Team requires assistance from GDOT with the acquisition of such DB Team Proposed/DB Team Acquired Right of Way.

2.2.4.2 If after reasonable effort the DB Team is unable to acquire the DB Team Proposed/DB Team Acquired Right of Way, the DB Team may request, GDOT will consider and if in agreement GDOT will undertake and complete the acquisition of DB Team Proposed/DB Team Acquired Right of Way, subject to this Article 2.2.4, Section 7 of the Technical Provisions, and all applicable Laws relating to such acquisition, including the Uniform Act.

2.2.4.3 Except as provided in this Article 2.2.4, DB Team shall be responsible for all costs, expenses, and delays associated with acquiring all DB Team Proposed/DB Team Acquired Right of Way under this Agreement, including (a) the cost of acquisition services and document preparation, (b) the cost of condemnation proceedings required by the Attorney General, through jury trials and appeals, including attorneys' and expert witness fees, and all fees and expenses for exhibits, transcripts, photos and other documents and materials production, (c) the purchase prices, costs to cure, court awards or judgments, for all parcels required for the Project or the Work, (d) the cost of permanent or temporary acquisition of leases, easement and other interests in real property, including for drainage, temporary work space, lay down areas, material storage areas, earthwork borrow sites, and any other convenience of DB Team, (e) the

cost of permitting, (f) closing costs associated with parcel purchases, in accordance with the Uniform Act and GDOT policies, and (g) relocation assistance payments and costs, in accordance with the Uniform Act. If GDOT incurs any such costs and expenses on DB Team's behalf, GDOT may submit any invoices for such costs and expenses to DB Team, in which case DB Team shall pay the invoices within 30 days of DB Team's receipt of such invoices. As a condition precedent to GDOT exercising its condemnation powers and the Attorney General initiating any condemnation proceedings with respect to a parcel, DB Team shall pay to GDOT the estimated amount of the costs of the condemnation proceedings, including the required monetary court deposit associated with such parcel and estimated attorneys' fees. If GDOT pays any such costs and expenses on DB Team's behalf, DB Team shall reimburse GDOT within 30 days of DB Team's receipt of an invoice therefor. Other than excess amounts, if any, remaining after such condemnation proceedings, which shall be returned to DB Team, DB Team shall not be entitled to payment or reimbursement for any costs or expenses as set forth in this Article 2.2.4, nor shall such costs or expenses be included on account of any Compensation Event.

Article 3 CONTRACT TIME

3.1 Term of Agreement

This Agreement shall remain in effect until Final Acceptance, subject to the survival of all such obligations as expressly provided herein, including without limitation, any warranty periods (the "Term"); provided that this Agreement shall be subject to earlier termination in accordance with the terms of this Agreement and the DB Documents.

3.2 Project Schedule

3.2.1 As a material consideration for entering into this Agreement, DB Team hereby commits, and GDOT is relying upon DB Team's commitment, to develop, design and fully construct the Project in accordance with the milestones and time periods set forth in this Agreement and the other DB Documents, including without limitation, in the Technical Provisions, the Project Schedule and Completion Deadlines, including Interim Completion Deadlines, subject only to delays caused by Relief Events specifically provided hereunder.

3.2.2 The time limitations set forth for DB Team's performance of its covenants and obligations as required pursuant to the DB Documents, including without limitation performance of the Work as required pursuant to the Completion Deadlines, including Interim Completion Deadlines, and Project Schedule, are of the essence, and except where this Agreement expressly provides for extension of time due to a Relief Event or Compensation Event, DB Team waives any right at law or in equity to tender or complete performance beyond the applicable time period, or to require GDOT to accept such performance. All references to days shall mean Calendar Days unless otherwise specified.

3.2.3 DB Team shall achieve the Interim Completion Date of each Early Portion of the Work on or before each of the applicable Interim Completion Deadlines, Substantial Completion on or before the Substantial Completion Deadline and Final Acceptance on or before the Final Acceptance Deadline, time being of the essence.

3.2.4 DB Team hereby represents and warrants that the Project Schedule is in the form described in the Technical Provisions, has been developed in accordance with Section 2.5 of the Technical Provisions, and is consistent with the Milestone Deadlines set forth in Exhibit 9 to this Agreement. DB Team shall use the Proposal Schedule as a foundation to prepare the Baseline Project Schedule for GDOT's review and approval, as set forth in Section 2.5 of the Technical Provisions. The Parties shall use the Proposal Schedule for planning and monitoring the progress of the Work until such time that the Baseline Project Schedule is approved by GDOT. The proposed Baseline Project Schedule shall be consistent with the Proposal Schedule and Milestone Deadlines except to the extent adjustments are allowed as provided in the DB Documents and as approved by GDOT.

3.2.5 All Float contained in the Project Schedule shall be considered a shared resource among GDOT and the DB Team, available to any or all such parties as needed to absorb delay caused to the Critical Path components as set forth in the Project Schedule or Milestone Deadlines, whether on account of Relief Events or other events of delay not constituting Relief Events. All Float shall be shown as such in the Project Schedule on each affected schedule path. GDOT shall have the right to examine the identification of (or failure to identify) Float on the Project Schedule in determining whether to approve or accept the Project Schedule. Once identified, DB Team shall monitor and account for Float in accordance with Critical Path methodology.

3.3 Contract Time, Date of Commencement, and Notice to Proceed

3.3.1 DB Team's time period for completion of the Work is the period from the day after issuance of NTP 1 through the Final Acceptance Date, as may be adjusted for any Relief Event as expressly provided in the Agreement (the "Contract Time"). All Work shall be performed in accordance with the Milestone Deadlines attached as Exhibit 9.

3.3.1.1 GDOT anticipates issuing NTP 1 promptly following the Effective Date, and shall in any case provide for issuance of NTP 1 within 30 days from DB Team's satisfaction of the conditions for execution of the Agreement. Issuance of NTP 1 authorizes DB Team to commence preliminary design activities in accordance with 23 CFR § 636.103. Prior to completion of the Environmental Documents review process, any such preliminary engineering and other activities and analyses are at the DB Team's sole risk and shall not materially affect the objective consideration of alternatives in the Environmental Documents review process. Preliminary design activities shall be completed in accordance with the Management Plans, the Technical Provisions, and other activities anticipated to be performed after NTP 1, including satisfying the conditions to issuance of NTP 3 under Article 3.3.1.3.

3.3.1.2 Issuance of NTP 2 authorizes the DB Team to perform all NTP 1 activities, Final Design activities, and any other activities required for start of the Construction Work in accordance with 23 CFR § 636.103. NTP 2 will be issued once the Environmental Documents are approved, or with NTP 1 if the Environmental Documents have been approved by the Agreement execution date.

3.3.1.3 Issuance of NTP 3, also referred to as Released for Construction ("RFC"), authorizes DB Team to perform all other Work and activities pertaining to the Project, subject to conforming RFC Plans as may be related to commencement of any Element of the Construction Work. DB Team may not proceed to commence any construction activity with respect to the Project except as authorized pursuant to an RFC. An RFC may be issued for the entire project or any Construction Phase of the project. GDOT anticipates issuing NTP 3 after GDOT's issuance of Right of Way certification and within five Business Days from DB Team's satisfaction of the following conditions:

(a) Submittal by DB Team to GDOT and acceptance by GDOT of the Quality Management Plan in accordance with Article 9 of this Agreement and Section 2.3 of the Technical Provisions;

(b) Submittal by DB Team to GDOT and acceptance by GDOT of DB Team's Safety Plan under Section 2.4 of the Technical Provisions;

(c) Submittal by DB Team to GDOT and acceptance by GDOT of DB Team's Released for Construction Plans for the phases of the Project under Section 3 of the Technical Provisions;

(d) Submittal by DB Team to GDOT and acceptance by GDOT of DB Team's proposed Schedule of Values under Section 2.6 of the Technical Provisions;

(e) Submittal by DB Team to GDOT and acceptance by GDOT of the DB Team's proposed Baseline Project Schedule under Section 2.5 of the Technical Provisions;

(f) Submittal by DB Team to GDOT and acceptance by GDOT of DB Team's Traffic Control Plan under Section 18.3 of the Technical Provisions for the approved Project Phase;

(g) Submittal by DB Team to GDOT and acceptance by GDOT of DB Team's Transportation Management Plan under Section 18.2 of the Technical Provisions;

(h) Submittal by DB Team to GDOT and acceptance by GDOT of DB Team's Construction Phasing and Staging Plan of Project, as applicable, under Section 2.2.4 of the Technical Provisions;

(i) Submittal by DB Team to GDOT and acceptance by GDOT of DB Team's Construction Maintenance Limits Plan under Section 19.2 of the Technical Provisions;

(j) Submittal by DB Team to GDOT and acceptance by GDOT of DB Team's Comprehensive Environmental Protection Plan (CEPP) under Section 4.3 of the Technical Provisions;

(k) Submittal by DB Team to GDOT and acceptance by GDOT of DB Team's Right of Way Acquisition Plan, as applicable, under Section 5.3.5 of the Technical Provisions;

(l) Submittal by DB Team to GDOT and acceptance by GDOT of DB Team's Demolition and Abandonment Plan, as applicable, under Section 10.2 of the Technical Provisions;

(m) Submittal by DB Team to GDOT and acceptance by GDOT of DB Team's Maintenance Management Plan under Section 19.3 of the Technical Provisions;

(n) Evidence by DB Team of all required Government Approvals as required under Article 6.2 for the approved Project Phase;

(o) Reserved;

(p) Submittal by DB Team to GDOT and acceptance by GDOT of all Standard Utility Agreements, Utility Encroachment Permits, Emergency Utility Response Plan, Utility Relocation Plans, and/or Certification of "No-Conflict" for the approved Project Phase, if required, under Article 7.5 of the Agreement and Section 6 of the Technical Provisions;

(q) Submittal by DB Team to GDOT of qualified Worksite Utility Control Supervisor (WUCS), Worksite Erosion Control Supervisor (WECS), and Worksite Traffic Control Supervisor (WTCS); and

(r) Submittal by DB Team to GDOT and acceptance by GDOT of all other Management Plans and other submittals required by the DB Documents to be submitted and/or accepted or approved prior to NTP 3 or start of the Construction Work for that Element of the Project.

3.3.1.4 Notwithstanding any provision to the contrary in this Article 3.3, DB Team shall not perform, nor be obligated to perform, any portion of the Work prior to issuance of approval of the Environmental Documents, except for Work authorized under 23 C.F.R. 636.103, Preliminary Work.

3.3.2 DB Team shall satisfy all conditions prior to issuance of NTP 3. DB Team shall satisfy all conditions to commencement of the Construction Work and commence such Construction Work with diligence and continuity, by the deadlines therefor set forth in Milestone Deadlines attached as Exhibit 9, and any adjustments set forth therein, all as the same may be extended pursuant to this Agreement.

3.3.3 Prior to the start of any Construction Work, the DB Team shall satisfy conditions set forth in Section 2 and Section 3 of the Technical Provisions.

Article 4 CONTROL OF THE WORK

4.1 DB Team Quality Management

The DB Team shall perform the quality control, that is all operation techniques and activities performed or conducted to fulfil the contract requirements, and quality management necessary to meet its obligations under the DB Documents and in accordance with GDOT Standard Specification 105.

4.2 Reserved

4.3 Reserved

4.4 Limitations on DB Team's Right to Rely

4.4.1 No review, comment, objection, rejection, acceptance, disapproval, certification (including certificates of Substantial Completion and Final Acceptance), concurrence, monitoring, testing, verification sampling, inspection, spot checking, auditing or other oversight by or on behalf of GDOT or their representatives or agents, or lack thereof by GDOT, or their representatives or agents, shall constitute acceptance of materials or Work or waiver of any legal or equitable right under the DB Documents, at Law, or in equity. GDOT shall be entitled to remedies for Nonconforming Work and to identify additional Work which must be done to bring the Work and Project into compliance with requirements of the DB Documents, regardless of whether previous review, comment, objection, rejection, acceptance, disapproval, certification, concurrence, monitoring, testing, inspection, spot checking, auditing or other oversight were conducted or given by GDOT, or their representatives or agents. Regardless of any such activity or failure to conduct any such activity by GDOT, or its representatives or agents, DB Team at all times shall have an independent duty and obligation to fulfill the requirements of the DB Documents. DB Team agrees and acknowledges that any such activity or failure to conduct any such activity by GDOT, or their representatives or agents:

(a) is solely for the benefit and protection of GDOT;

(b) does not relieve DB Team of its responsibility for the selection and the competent performance of all DB Team-Related Entities;

(c) does not create or impose upon GDOT any duty or obligation toward DB Team to cause it to fulfill the requirements of the DB Documents;

(d) shall not be deemed or construed as any kind of warranty, express or implied, by GDOT;

(e) may not be relied upon by DB Team or used as evidence in determining whether DB Team has fulfilled the requirements of the DB Documents;

(f) may not be asserted by DB Team against GDOT as a defense, legal or equitable, to, or as a waiver of or relief from, DB Team's obligation to fulfill the requirements of the DB Documents; and

(g) shall not be deemed or construed as any assumption of risk by GDOT as to the quality of Work or materials.

4.4.2 DB Team shall not be relieved or entitled to reduction of its obligations to perform the Work in accordance with the DB Documents, or any of its other liabilities and obligations, including its indemnity obligations, as the result of any activity identified in Article 4.4.1 or failure to conduct any such activity by GDOT. Such activity by GDOT shall not relieve DB Team from liability for, and responsibility to cure and correct Nonconforming Work or DB Team Defaults.

4.4.3 To the maximum extent permitted by Law, DB Team hereby releases and discharges GDOT from any and all duty and obligation to cause DB Team's Work or the Project to satisfy the standards and requirements of the DB Documents. GDOT is an intended third-party beneficiary of this Article 4.4.

4.4.4 Notwithstanding the provisions of Articles 4.4.1, 4.4.2 and 4.4.3:

(a) DB Team shall be entitled to rely on written approvals, acceptances, lack of responses from GDOT (i) for the limited purpose of establishing that the approval, acceptance or lack of response occurred or (ii) that are within its sole discretion, but only to the extent that DB Team is prejudiced by a subsequent decision of such party to rescind such approval or acceptance;

(b) DB Team shall be entitled to rely on the certificates of Substantial Completion and Final Acceptance from GDOT for the limited purpose of establishing that Substantial Completion and Final Acceptance, as applicable, have occurred, and the respective dates thereof;

(c) GDOT is not relieved from any liability arising out of a knowing and intentional material misrepresentation under any written statement GDOT delivers to DB Team; and

(d) GDOT is not relieved from performance of its express responsibilities under the DB Documents in accordance with all standards applicable thereto.

4.5 Reserved

4.6 Oversight by GDOT for FHWA and Federal Compliance

4.6.1 GDOT shall independently have the right at all times to monitor, inspect, sample, measure, attend, observe or conduct tests and investigations, and conduct any other oversight respecting any part or aspect of the Project or the Work, to the extent necessary or advisable (a) to comply with FHWA, U.S. Army Corps of Engineers or other applicable federal agency requirements, and (b) to verify on an audit

basis DB Team's compliance with the DB Documents and Management Plans as provided in Article 22.2.

4.6.2 DB Team acknowledges and agrees that GDOT will have the right to audit, monitor and inspect DB Team and its Contractors compliance with Good Industry Practice and its responsibilities and obligations under the DB Documents.

4.6.3 GDOT will not conduct formal prior reviews of Design Documents except to the extent necessary or advisable to comply with FHWA, U.S. Army Corps of Engineers or other applicable federal agency requirements, provided that the aforementioned shall not limit GDOT's rights pursuant to this Agreement. FHWA and GDOT reserve the right to conduct "over-the-shoulder" reviews of Design Documents or other Submittals as they may deem necessary or appropriate, including pursuant to Article 17.3.8, provided that they shall not have any obligation to conduct such reviews nor assume any responsibility for DB Team's Work, regardless of whether or not electing to perform or performing any such "over-the-shoulder" reviews.

4.6.4 Nothing in the DB Documents shall preclude, and DB Team shall not interfere with, any review, audit or oversight of Submittals, Work or books and records that the GDOT or FHWA may desire to conduct.

4.7 Rights of Cooperation and Access; Increased Oversight

4.7.1 DB Team shall coordinate and cooperate, and require its Contractors to coordinate and cooperate, with GDOT and any such parties as provided in Article 4.5 and Article 4.6 to facilitate the full, efficient, effective and timely performance of all such monitoring, inspection, sampling, measuring, testing, reporting, auditing, and other oversight functions. DB Team shall cause its representatives to be available at all reasonable times for consultation with GDOT and such other parties as required.

4.7.2 Without limiting the foregoing and subject to GDOT complying with DB Team's reasonable safety requirements, DB Team shall afford GDOT:

(a) safe and unrestricted access to the Project at all times,

(b) safe access during normal business hours to DB Team's Project offices and operations buildings,

(c) safe access during normal business hours to the Project Specific Locations and

(d) unrestricted access to data respecting the Project design, construction, operations and maintenance, and the Utility Adjustment Work.

4.7.3 Without limiting the foregoing, DB Team shall deliver to GDOT upon request accurate and complete books, records, data and information regarding Work, the Project and the Utility Adjustment Work, in the format required by the Technical Provisions.

4.7.4 GDOT shall have the right to increase the type and level of their oversight as provided in Article 4.6 and Article 17.3.8.

4.8 Limits of Responsibility for Oversight, Review, Recommendations, Inspection and Acts by GDOT

4.8.1 Although GDOT, and its representatives and agents, may consult with DB Team during the course of the Work, no such party shall have control over, charge of, or responsibility for any of the Work, including without limitation, any design or engineering thereof, or means, methods, techniques, sequences or procedures in connection therewith, nor shall any such party be responsible for DB Team's failure to perform the Work in accordance with the requirements of the DB Documents. Any such review is not for the purpose of determining the accuracy and completeness of information or work product, all of which are DB Team's responsibility. Any review, recommendation, acceptance, inspection, response, act or omission with respect to any Submittals, or with respect to the Project, the Work (whether Construction Work or Design Work), or the Construction Documents shall be pursuant to, and solely in furtherance of the inspection powers as set forth in O.C.G.A. § 50-21-24(8).

4.8.2 DB Team shall, at all times and notwithstanding any such acts or omissions by GDOT as provided in this Article 4 or elsewhere in this Agreement, be fully responsible for all architectural design and engineering required for the Project. DB Team expressly waives and releases (a) all claims for right of contribution against either GDOT, or its respective representatives and agents, other than for such parties' sole negligence, arising from or related to any third-party claims, including without limitation for personal injury, death, or property damage, and (b) all claims and defenses by DB Team against either GDOT, or its respective representatives and agents in derogation of the limitations of this Article 4, including this Article 4.8, and/or that any or all of such parties otherwise have, or by their acts or omissions, assumed any responsibility for, or related to, the design or construction of the Project, or any means, methods, or techniques in respect thereof. DB Team hereby further expressly waives any claim or defense the basis of which is to assert that GDOT may not delegate the responsibility for any Element of the design and construction of the Project involving public roadways, signs, or traffic controls to DB Team as provided in this Agreement.

Article 5 CONTRACT SUM, PAYMENTS, AND PUBLIC FUNDS

5.1 Payment of Contract Sum

5.1.1 GDOT shall pay DB Team the Contract Sum for Work properly performed in accordance with the DB Documents. DB Team, in consideration for all Work performed in accordance with the DB Documents, shall be entitled to receive the Contract Sum, which amount is inclusive of all fees, overhead, profit, insurance and bond premiums, labor and material costs, installations, delivery, warehouse and handling charges, duties, taxes and other assessments.

5.2 Reserved

5.3 Reserved

5.4 GDOT Monetary Obligations and Overall Limitation of Liability

5.4.1 Notwithstanding anything to the contrary in the DB Documents, in no event shall GDOT's outstanding liability to DB Team under the DB Documents, including liability related to Compensation Events and Compensation Amounts, exceed the amount of compensation that would be payable to DB Team pursuant to a Termination for Convenience under Article 19.1.

5.4.2 The payment of any moneys owed by GDOT under the DB Documents, including without limitation amounts payable in connection with a termination, upon the occurrence of a GDOT Event of Default, or in any suit for monetary damages alleging breach of this Agreement by GDOT, shall be limited to funds available to GDOT for such payments.

5.4.3 Reserved

5.4.4 Reserved

Article 6 PROJECT PLANNING AND ACCEPTANCES; PROJECT ADMINISTRATION, REVIEW AND OVERSIGHT; PUBLIC INFORMATION

6.1 Preliminary Planning and Engineering Activities; Site Conditions

6.1.1 DB Team shall perform or cause to be performed all architectural and engineering activities appropriate for design and construction of the Project in accordance with Good Industry Practice and the DB Documents, which may include, subject to the scope of Work set forth in the DB Documents or as required by GDOT by Supplemental Agreement or Directive Letter:

(a) Utility Adjustments;

(b) technical studies and analyses;

(c) geotechnical investigations;

(d) right of way mapping, surveying and appraisals;

(e) Subsurface Utility Engineering (SUE) investigations and mapping;

(f) Hazardous Materials investigations; and

(g) design and construction surveys.

6.1.2 Except to the extent that DB Team is entitled to a Relief Event and/or a Compensation Event under this Agreement, DB Team shall bear the risk of any incorrect or incomplete review, examination and investigation by it of the Site or the Existing Improvements and surrounding locations, and of any incorrect or incomplete information

resulting from preliminary architectural and engineering activities conducted by DB Team, GDOT, or any other Person. DB Team acknowledges and agrees that GDOT makes no warranties or representations as to any surveys, data, reports or other information provided by GDOT or other Persons concerning surface conditions and subsurface conditions, including the presence of Utilities, Hazardous Materials, contaminated groundwater, archeological, paleontological and cultural resources, and Threatened or Endangered Species, affecting the Site, the Existing Improvements, or surrounding locations. DB Team acknowledges that such information is for DB Team's reference only and has not been verified.

6.1.3 Except to the extent that DB Team is entitled to a Relief Event and/or a Compensation Event under this Agreement, DB Team shall bear the risk of all conditions occurring on, under or at the Site and the Existing Improvements, including (a) physical conditions of an unusual nature, differing materially from those ordinarily encountered in the area, (b) changes in surface topography, (c) variations in subsurface moisture content, (d) Utility facilities, (e) the discovery at, near or on the Property of any archeological, paleontological or cultural resources, and (f) the discovery at, near or on the Property of any Threatened or Endangered Species.

6.2 Governmental Approvals and Third-Party Agreements

6.2.1 GDOT retains responsibility for obtaining all Provided Approvals based on the design schematic contained in the NEPA Approvals. GDOT shall deliver to DB Team true and complete copies of all Provided Approvals. DB Team shall obtain all other Governmental Approvals and, except to the extent the DB Documents expressly provide GDOT is responsible therefor, all third-party approvals and agreements required in connection with the Project or the Work, including any modifications, renewals and extensions of the Provided Approvals (including those required in connection with a Compensation Event). DB Team shall deliver to GDOT true and complete copies of all new or amended Governmental Approvals and third-party approvals and agreements. In no event shall GDOT be responsible or liable for any delays in obtaining Provided Approvals to the extent such delays are caused by differences between the schematic contained in the NEPA Approvals and DB Team's Final Design, unless such differences are due to a GDOT Change.

6.2.2 Prior to submitting to a Governmental Entity any application for a Governmental Approval (or any proposed modification, renewal, extension or waiver of a Governmental Approval or provision thereof), DB Team shall submit the same, together with any supporting environmental studies and analyses, to GDOT (a) for acceptance or (b) for review and comment, as specified in the Technical Provisions in Table 4-2.

6.2.3 Except as expressly set forth in this Agreement to the contrary, in the event DB Team's design differs from the schematic contained in the approved Environmental Documents upon which the Provided Approvals were based, as among GDOT and DB Team, DB Team shall support necessary actions, and shall bear all risk of delay, resulting from or arising out of any associated change in the Project location and design, including (a) conducting all necessary environmental studies and preparing all necessary Environmental Documents in compliance with applicable Environmental Laws, and (b) obtaining and complying with all necessary new Governmental Approvals (including any modifications, renewals and extensions of the Provided Approvals, and other existing Governmental Approvals). GDOT and FHWA will independently evaluate

all environmental studies and documents and fulfill the other responsibilities assigned to them by 23 CFR Part 771.

6.2.4 Subject to clauses of Article 14.2 for Compensation Events and clauses of Article 14.1 for Relief Events and except to the extent required under the Technical Provisions, in the event DB Team is unable to obtain necessary Governmental Approvals for any design that differs from the schematics contained in the approved Environmental Documents upon which Provided Approvals were based, DB Team shall be obligated to design and construct the Project according to a design in compliance with the requirements of the Provided Approvals, and no such circumstance shall constitute a Relief Event or Compensation Event.

6.2.5 At DB Team's request, GDOT shall reasonably assist and cooperate with DB Team in obtaining from Governmental Entities the Governmental Approvals (including any modifications, renewals and extensions of existing Governmental Approvals from Governmental Entities) required to be obtained by DB Team under the DB Documents.

6.2.5.1 GDOT and DB Team shall work jointly to establish a scope of work and budget for GDOT Recoverable Costs related to the assistance and cooperation GDOT will provide as contemplated herein, subject to any rights of DB Team in the case of a Compensation Event.

6.2.5.2 Such costs and expenses shall be subject to the limitations for GDOT Recoverable Costs provided however that, notwithstanding the limitations of subpart (a) in the definition of GDOT Recoverable Costs, such reimbursable amounts shall expressly include costs and expenses incurred to conduct further or supplemental environmental studies as a result of (i) any DB Team Proposed Right of Way, or (ii) DB Team Release(s) of Hazardous Material.

6.2.6 DB Team shall comply with all conditions imposed by and undertake all actions required by and all actions necessary to maintain in full force and effect all Governmental Approvals, including performance of all environmental mitigation measures required by the DB Documents or Governmental Approvals and including payment of mitigation credits and any other fees required for Governmental Approvals, except to the extent that responsibility for performance of such measures and payment is expressly assigned to GDOT in the DB Documents.

6.2.7 In the event that any Governmental Approvals required to be obtained by DB Team must formally be issued in GDOT's name, DB Team shall undertake necessary efforts to obtain such approvals subject to GDOT's reasonable cooperation with DB Team, as the case may be, at DB Team's expense (except in connection with a Compensation Event), in accordance with Article 6.2.5, including execution and delivery of appropriate applications and other documentation in form accepted by GDOT. Refer to Section 4.2 of the Technical Provisions for more specific provisions on applications in GDOT's name for Environmental Approvals.

6.2.8 In the event that GDOT or FHWA must act as the lead agency and directly coordinate with a Governmental Entity in connection with obtaining Governmental Approvals which are the responsibility of DB Team, DB Team shall provide all necessary support to facilitate the approval, mitigation or compliance process.

Such support may include conducting necessary field investigations, surveys, and preparation of any required reports, documents and applications.

6.2.9 DB Team shall be responsible for compliance with all applicable Laws in relation to Project Specific Locations and Additional Properties for obtaining any Environmental Approval or other Governmental Approval required in connection with Project Specific Locations.

6.2.10 DB Team shall not enter into any agreement with any Governmental Entity, Utility Owner, railroad, property owner or other third party having regulatory jurisdiction over any aspect of the Project or Work or having any property interest affected by the Project or the Work that in any way purports to obligate GDOT, or the State or an agency or department thereof, or states or implies that GDOT has an obligation, to the third party to carry out any installation, design, construction, maintenance, repair, operation, control, supervision, regulation or other activity after the end of the Term, unless GDOT otherwise accepts in writing in its sole discretion. DB Team has no power or authority to enter into any such agreement with a third party in the name or on behalf of GDOT.

6.3 Review and Oversight

6.3.1 Submittal, Review and Acceptance Terms and Procedures

6.3.1.1 This Article 6.3 sets forth uniform terms and procedures that shall govern all Submittals pursuant to the DB Documents and component plans thereunder. In the event of any irreconcilable conflict between the provisions of this Article 6.3 and any other provisions of the DB Documents and component plans thereunder concerning submission, review and acceptance, rejection, or approval procedures, this Article 6.3 shall exclusively govern and control, except to the extent that the conflicting provision expressly states that it supersedes this Article 6.3.

6.3.2 Time Periods

6.3.2.1 Except as expressly set forth elsewhere in the DB Documents or as provided below, whenever GDOT is entitled to review and comment, or accept a Submittal, GDOT shall promptly respond within 30 days from the date it receives an accurate and complete Submittal, accuracy and completeness shall be at GDOT's sole discretion, together with a completed transmittal form, in form to be mutually agreed upon, and all necessary information and documentation concerning the subject matter included. Any period of review by GDOT more than 30 days, or as specifically set forth elsewhere in the DB Documents providing for a different time period, may be deemed a GDOT Caused-Delay and give rise to Relief Event, subject to the provisions and satisfying all DB Document requirements for Relief Events. The time periods set forth in the DB Documents for GDOT's review and acceptance or approval of Submittals, as and to the extent required shall apply to and restart with all re-submittals or if additional information or documentation is required to complete a Submittal which DB Team may be required to provide.

6.3.2.2 The time periods set forth herein with respect to GDOT's review and acceptance, rejection, or approval, or comment on Submittals shall be subject to adjustment as provided in Section 3 of the Technical Provisions for multiple concurrent Submittals.

6.3.2.3 All time periods for GDOT to act upon Submittals shall be extended by the period of any delay caused by any Relief Event impacting same, including as set forth in clauses of Article 14.1 for Relief Event or otherwise as and to the extent of any delay of DB Team or any DB Team-Related Entity.

6.3.2.4 During any time that GDOT is entitled under Article 17.3.8 to increase the level of its auditing, monitoring, inspection, sampling, measuring, testing and oversight of the Project, the Utility Adjustments and DB Team's compliance with its obligations under the DB Documents, the applicable period for GDOT to act on any Submittals received during such time and not related to curing the DB Team Default(s) that instigated the Article 17.3.8 action shall automatically be extended by 14 days.

6.3.2.5 GDOT shall endeavor to reasonably accommodate a written request from DB Team for expedited action on a specific Submittal, within the practical limitations on availability of personnel appropriate for acting on the types of Submittal in question; provided DB Team sets forth in its request specific, abnormal circumstances demonstrating the need for expedited action. This provision shall not apply, however, during any time described in Articles 6.3.2.3 and Article 6.3.2.4.

6.3.3 GDOT Discretionary Acceptances

If the Submittal is one where the DB Documents indicate approval or acceptance is required from GDOT in its sole discretion or good faith discretion, then GDOT's lack of approval, acceptance, determination, decision, or other action within the applicable time period under Article 6.3.2 shall be deemed non-acceptance. If the approval is subject to good faith discretion of GDOT, then its decision shall be binding unless it is finally determined by clear and convincing evidence that such decision is determined to be arbitrary and capricious and causes delay; when so determined, it will then constitute and be treated as a GDOT-Caused Delay.

6.3.4 Other GDOT Acceptances

6.3.4.1 Whenever the DB Documents indicate that a Submittal or other matter is subject to GDOT's approval or acceptance, and no particular standard therefor is stated, then the standard shall be reasonableness.

6.3.4.2 If the reasonableness standard applies to GDOT's right of approval or acceptance of a Submittal, and GDOT delivers no approval or acceptance within the applicable time period under Article 6.3.2, then DB Team may deliver to GDOT a written notice stating the date within which GDOT was to have decided or acted. If GDOT does not respond or act within seven days after receipt of the notice, then a delay may constitute GDOT-Caused Delay under Article 14, subject to the provisions and satisfying all DB Document requirements

for Relief Events and Compensation Events. Regardless of the actual days of delay, the start of any GDOT-Caused Delay shall be measured from 14 days from the end of the last review period for that Submittal. DB Team hereby agrees to plan for and account for such notice periods within the Project Schedule.

6.3.4.3 If GDOT requires an approval of a Submittal, such approval is a formal conditional determination in writing by GDOT that a particular matter, Submittal, or item is good or satisfactory for the Project. Such determination may be based on requirements or commitments beyond those set forth in the DB Documents and may reflect preferences of GDOT.

6.3.5 GDOT Review and Comment

6.3.5.1 Whenever the DB Documents indicate that a Submittal or other matter is subject to GDOT's review, comment, review and comment, disapproval or similar action not entailing a prior approval or acceptance and GDOT delivers no comments, exceptions, objections, rejections or disapprovals within the applicable time period under Article 6.3.2, then DB Team may proceed thereafter at its election and risk, without prejudice to GDOT's rights to later object, reject, or disapprove.

6.3.5.2 No such failure or delay by GDOT in delivering comments, exceptions, objections, rejections or disapprovals within the applicable time period under Article 6.3.2 shall constitute a GDOT-Caused Delay, GDOT Change, Relief Event or Compensation Event.

6.3.5.3 When used in the DB Documents, the phrase "completion of the review and comment process" or similar terminology means either (a) GDOT has reviewed, provided comments, exceptions, objections, rejections or disapprovals, and all the same have been resolved, or (b) the applicable time period has passed without GDOT providing any comments, exceptions, objections, rejections or disapprovals.

6.3.6 Submittals Not Subject to Prior Review, Comment or Acceptance

Whenever the DB Documents indicate that DB Team is to deliver a Submittal to GDOT but express no requirement for GDOT review, comment, disapproval, prior acceptance or other GDOT action, then DB Team is under no obligation to provide GDOT any period of time to review the Submittal or obtain acceptance of it before proceeding with further Work, and GDOT shall have the right, but is not obligated, to at any time review, comment on, take exception to, object to, reject or disapprove the Submittal. No failure or delay by GDOT in delivering comments, exceptions, objections, rejections or disapprovals with respect to any Submittal as set forth in this Article 6.3 shall constitute a Relief Event or Compensation Event.

6.3.7 Resolution of GDOT Comments and Objections

6.3.7.1 If the Submittal is one not governed by Article 6.3.3 or Article 6.3.6, GDOT's exception, objection, rejection or disapproval shall be deemed reasonable, valid and binding if based on any of the following grounds:

(a) The Submittal or subject provision thereof fails to comply with any applicable covenant, condition, requirement, commitment, term, or provision of the DB Documents or Management Plans thereunder;

(b) The Submittal or subject provision thereof is not to a standard equal to or better than the requirements of Good Industry Practice;

(c) DB Team has not provided all content or information required in respect of the Submittal or subject provisions thereof, provided that GDOT assumes no duty, obligation or liability regarding completeness or correctness of any Submittal, including a Submittal that is to be delivered to a Governmental Entity as a proposed Governmental Approval, or in order to obtain, modify, amend, supplement, renew, extend, waive or carry out a Governmental Approval;

(d) Adoption of the Submittal or subject provision thereof, or of any proposed course of action thereunder, would result in a conflict with or violation of any Law or Governmental Approval; or

(e) In the case of a Submittal that is to be delivered to a Governmental Entity as a proposed Governmental Approval, or in order to obtain, modify, amend, supplement, renew, extend, waive or carry out a Governmental Approval, it proposes commitments, requirements, actions, terms or conditions that are not arrangements that GDOT offers or accepts for addressing similar circumstances affecting its own projects.

6.3.7.2 DB Team shall timely and promptly respond to all of GDOT's comments and objections to a Submittal and, except as provided below, make modifications to the Submittal as necessary to fully reflect and resolve all such comments and objections, in accordance with the review processes set forth in this Article 6.3. DB Team acknowledges that GDOT may provide comments and objections which reflect concerns regarding interpretation or preferences of the commenter or which otherwise do not directly relate to grounds set forth in Article 6.3.7.1. DB Team agrees to undertake reasonable efforts to accommodate or otherwise resolve any such comments or objections through the review processes described in this Article 6.3.

6.3.7.3 If DB Team fails to notify GDOT within such time period, GDOT may deliver to DB Team a written notice stating the date by which DB Team was to have responded to GDOT's comments and that if DB Team does not respond to those comments within five Business Days after receipt of this notice, then that failure shall constitute DB Team's agreement to make all changes necessary to accommodate and resolve the comment or objection and full acceptance of all responsibility for such changes without right to a Relief Event or Compensation Event.

6.3.7.4 The foregoing shall in no way be deemed to obligate DB Team to incorporate any comments or resolve objections that would render the Submittal erroneous, defective or less than Good Industry Practice, except pursuant to a GDOT Change.

6.3.7.5 After GDOT receives DB Team's explanation as to why the modifications are not required as provided in Article 6.3.7.2, Article 6.3.7.3 and Article 6.3.7.4, the Parties shall attempt in good faith to resolve the Dispute. If they are unable to resolve the Dispute, it shall be resolved according to Article 17.7 except (a) as provided otherwise in Article 6.3.3, and (b) if GDOT elects to issue a Directive Letter pursuant to Article 13.1 with respect to the disputed matter, the DB Team shall proceed in accordance with GDOT's directive while retaining any claim as to the disputed matter.

Article 7 DEVELOPMENT OF THE PROJECT

7.1 General Obligations of DB Team

DB Team, in addition to performing all other requirements of the DB Documents, shall:

7.1.1 Furnish all design, engineering and other services, provide construction management and all work, including all materials, equipment, labor, and installations, and undertake all efforts necessary or appropriate (excluding only those materials, services and efforts which the DB Documents expressly specify will be undertaken by GDOT or other Persons) to construct the Project and maintain it during construction, so as to achieve Substantial Completion and Final Acceptance by the applicable Milestone Deadlines;

7.1.2 At all times provide a Project Manager approved by GDOT who:

(a) will have full responsibility for the prosecution of the Work, including Design Work and Construction Work,

(b) will act as agent and be a single point of contact in all matters on behalf of DB Team,

(c) will be present (or his/her designee approved by GDOT will be present) at the Site at all times that Design Work or Construction Work is performed, and

(d) will be available to respond to GDOT;

7.1.3 Comply with, and require that all Contractors comply with, all requirements of all applicable Laws;

7.1.4 Cooperate with GDOT and Governmental Entities with jurisdiction in all matters relating to the applicable portions of the Work, including Design Work and Construction Work for the Project, including their review, inspection and oversight of the design and construction; and

7.1.5 Use commercially reasonable efforts to mitigate delay to design and construction of the Project and mitigate damages due to delay in all circumstances, to the extent possible, including by re-sequencing, reallocating, or redeploying DB Team's and its Contractors' forces to other work.

7.2 Performance, Design and Construction Standards

7.2.1 DB Team shall furnish all aspects of the Design Work and all Design Documents, and shall construct the Project and perform the Construction Work as designed, free from Defects, and in accordance with (a) Good Industry Practice, (b) the requirements, terms and conditions set forth in the DB Documents, (c) the Project Schedule, (d) all Laws, (e) the requirements, terms and conditions set forth in all Governmental Approvals, and (f) the requirements of the accepted Quality Management Plan (QMP) or to be prepared thereunder, in each case taking into account the Existing Right of Way, Required Right of Way, and any Additional Property limits and other constraints affecting the Project and the Property.

7.2.2 Reserved

7.2.3 DB Team acknowledges that prior to the Effective Date it had the opportunity to identify any provisions of the Technical Provisions or Technical Documents that are erroneous or create a potentially unsafe condition, and the opportunity and duty to notify GDOT in writing of such fact and of the changes to the provision that DB Team believed were the minimum necessary to render it correct and safe. If it is reasonable or necessary to adopt changes to the Technical Provisions or Technical Documents after the Effective Date to make the provisions correct and safe, such changes shall not be grounds for a Relief Event or Compensation Event unless (a) DB Team neither knew nor had reason to know prior to the Effective Date that the provision was erroneous or created a potentially unsafe condition or (b) DB Team knew of and reported to GDOT the erroneous or potentially unsafe provision prior to the Effective Date and GDOT did not adopt reasonable and necessary changes. Except for a circumstance as set forth under (b) herein, if DB Team commences or continues any Design Work or Construction Work affected by such a change after the need for the change was discovered or suspected, or should have been discovered or suspected through the exercise of reasonable care, DB Team shall bear any additional costs associated with redoing the Work already performed. Inconsistent or conflicting provisions of the DB Documents shall not be treated as erroneous provisions under this Article 7.2.3, but instead shall be governed by Article 1.2.

7.2.4 References in the Technical Provisions or Technical Documents to manuals or other publications governing the Design Work or Construction Work prior to the Substantial Completion Date shall mean the most recent editions in effect at the date of the RFP advertisement, unless expressly provided otherwise. Any changes to the Technical Provisions and Technical Documents, including Safety Standards, respecting Design Work or Construction Work prior to the Substantial Completion Date shall be subject to the Supplemental Agreement process for a GDOT Change in accordance with Article 13. Safety Compliance changes shall be in accordance with Article 12.1.

7.2.5 The Parties anticipate that from time to time after the Effective Date, GDOT will adopt, through revisions to existing manuals and publications or new manuals and publications, changed, added or replacement standards, criteria, requirements, conditions, procedures, specifications and other provisions, including Safety Standards, relating to Design Work and Construction Work. GDOT shall have the right to add such changed, added or replacement standards, criteria, requirements, conditions, procedures, specifications and other provisions, including Safety Standards, to Volume 2 by notice to DB Team, whereupon they shall constitute amendments, and become part,

of the Technical Documents. If such changed, added or replacement Technical Documents or Safety Standards encompass matters that are addressed in the Technical Provisions or Technical Documents as of the Effective Date, they may, upon inclusion in Volume 2, replace and supersede inconsistent provisions of the Technical Provisions and Technical Documents to the extent designated by GDOT in its sole discretion. GDOT will identify the superseded provisions in its notice to DB Team. Notwithstanding the foregoing, in the absence of a GDOT Change and except as provided otherwise in Article 7.5.3 with respect to Adjustment Standards, if GDOT adopts the changed, added or replacement standards, criteria, requirements, conditions, procedures, specifications and other provisions, including changed, added or replacement Safety Standards, prior to the Final Acceptance Date, DB Team shall not be obligated to (but may) incorporate the same into its design and construction of the Project prior to the Final Acceptance Date.

7.3 Design Implementation and Submittals

7.3.1 DB Team, through the appropriately qualified and licensed design professionals identified in DB Team's Key Personnel as identified in Exhibit 2 and in accordance with Section 2 of the Technical Provisions, shall prepare designs, Plans and specifications in accordance with the DB Documents. DB Team shall cause the Engineer of Record for the Project to sign and seal all Released for Construction Documents, any revisions to the Released for Construction Documents, all design changes, all Shop Drawings; and for conformance, the Record Drawings (As-Builts).

7.3.2 DB Team shall deliver to GDOT accurate and complete duplicates of all Interim Design, and Preliminary and Final Plans and Construction Documents within the time and in the form required by the Technical Provisions.

7.3.3 The Engineer of Record shall initiate or sign-off on all requests for information prior to the requests being submitted to GDOT.

7.4 Reserved

7.5 Utility Adjustments

7.5.1 DB Team's Responsibility

7.5.1.1 DB Team is responsible for causing, in accordance with the Project Schedule, all Utility Adjustments necessary to accommodate construction, operation, maintenance and/or use of the Project. DB Team shall coordinate, monitor, and otherwise undertake the necessary efforts to cause Utility Owners performing Utility Adjustment Work to perform such work timely, in coordination with the Work, and in compliance with the standards of design and construction and other applicable requirements specified in the DB Documents.

7.5.1.2 In addition to GDOT's Project administration, GDOT shall independently have the right at all times to approve Utility Adjustments as provided herein. DB Team shall coordinate and be required to procure GDOT approval as required.

7.5.1.3 Regardless of the arrangements made with the Utility Owners, the DB Team shall continue to be the responsible party to GDOT for timely performance of all Utility Adjustment Work so that upon completion of the Work, all Utilities that might impact the Project or be impacted by it (whether located within or outside the Construction Maintenance Limits) are compatible with the Project. GDOT will provide to DB Team the benefit of any provisions in recorded utility or other easements affecting the Project.

7.5.2 Standard Utility Agreements

The DB Team will be responsible for completion of all required Standard Utility Agreements. The DB Team working with the Utility Owner shall provide the cost estimate and supporting documents to the District Utilities Manager for review and acceptance. Upon the acceptance by the District, the approved cost estimate and supporting documents shall be forwarded to the State Utilities Preconstruction Manager for processing, final acceptance, and preparation of the Standard Utility Agreement. As described in the GDOT Utility Accommodation Policy and Standards Manual ("UAM"), Chapter 4.2.F Agreements cover all requirements for Standard Utility Agreements.

7.5.3 Requirements

Each Utility Adjustment (whether performed by DB Team, Subcontractor or by the Utility Owner) shall comply with the Adjustment Standards in effect at the date of the RFP advertisement, unless expressly provided otherwise, together with any subsequent amendments and additions to those standards that (a) are necessary to conform to applicable Law, or (b) are adopted by the Utility Owner and affect the Utility Adjustment pursuant to the applicable Standard Utility Agreement(s). In addition, all Utility Adjustment Work shall comply with all applicable Laws, the applicable Standard Utility Agreement(s), and all other requirements specified in Section 6 of the Technical Provisions.

7.5.4 Failure of Utility Owners to Cooperate/Escalation

DB Team shall use diligent efforts to obtain the cooperation of each Utility Owner as necessary for Utility Adjustments. It shall be the DB Team's responsibility to coordinate and track each Utility Owner's progress in relation to the Utility Work Plan or Revised Utility Work Plan previously accepted by GDOT. Once the DB Team has determined that the Utilities work progress is at least 20% behind the accepted Utility Work Plan; the DB Team will notify the Utility Owner, and GDOT of such apparent delay through written correspondence. Such written correspondence shall detail the delay in question and request the Utility to submit a proposal on how the Utility Owner plans to rectify such delay and maintain the project's schedule prescribed by the previously accepted Utility Work Plan. The Utility will respond to this letter within 10 Business Days. The response shall include a proposal to cure the delay identified by the DB Team. In some cases, the complexity of the project may require that a utility coordination meeting be held to address the issues identified by the DB Team. If the Utility determines that this is the case, then the Utilities response letter shall include a request to hold a utility coordination meeting with the DB Team, the Office of Innovative Delivery Utility Liaison, the District Utility Manager and the Construction Manager for utility delay resolution. If the utility delay cannot be resolved through the coordination efforts described above after 20 Business Days from the date provided in the DB Team's original written correspondence;

the said Dispute shall escalate to the State Construction Engineer for further consideration. If additional escalation is required, DB Team shall follow escalation procedures as outlined in the UAM, Chapter 672-19 of the Rules, and O.C.G.A. § 32-6-171.

7.5.5 Utility Permits (GUPS)

7.5.5.1 It is anticipated that during the design and construction phases of the Work, from time to time Utility Owners will apply for utility permits to install new Utilities that would cross or longitudinally occupy the Property, or to modify, upgrade, repair, relocate or expand existing Utilities within the Property for reasons other than accommodation of the Project.

7.5.5.2 As specified in Article 7.5.5.1, for all such utility permit applications pending as of or submitted after the Effective Date, DB Team shall furnish the most recent Project design information and/or as-built Plans, as applicable, to the applicants, and shall assist each applicant with information regarding the location of other proposed and existing Utilities.

7.5.6 Unexpected Utility Adjustments

Within 120 days after the initial NTP 2, DB Team shall conduct an investigation for any unidentified Utility. If DB Team finds an unidentified Utility during the 120-day time frame, DB Team may be entitled to a Compensation Event or a Relief Event. If DB Team finds an unidentified Utility after the 120-day time frame, DB Team shall not be entitled to a Compensation Event or a Relief Event. If a Utility is shown on the SUE Plans and not to be impacted by DB Team's Final Design, but is later identified by DB Team as needing to be relocated, DB Team shall not be entitled to a Compensation Event or a Relief Event. Notwithstanding the foregoing, DB Team shall not be entitled to a Compensation Event or a Relief Event for any Utility whose location, size and dimensions were reasonably accurate and shown on the SUE Plans.

7.5.7 Early Adjustments

If any Adjustments are designated as Early Adjustments in Section 6 of the Technical Provisions, such Adjustments are anticipated to be completed by the Utility Owner prior to the deadline therefore set forth in the Technical Provisions. DB Team's obligation to provide Protection in Place for Utilities includes any Early Adjustments, whether or not timely completed. DB Team shall coordinate with GDOT and the Utility Owner as may be necessary for orderly completion of any Early Adjustments, and DB Team shall conduct its Work without interfering with or hindering the progress or completion of any Early Adjustments.

7.6 Conditions to Commencement of Construction Work

7.6.1 Construction Work Generally

Except to the extent expressly permitted in writing by GDOT, DB Team shall not commence or permit or suffer commencement of construction of the Project, or applicable portion thereof, until GDOT issues NTP 3 and all of the conditions of Article 3.3.1.3 have been met.

7.6.2 Utility Adjustments

DB Team shall not commence or permit or suffer commencement of construction of a Utility Adjustment included in the Construction Work until GDOT issues NTP 3, and the requirements of Article 7.5 have been met.

7.7 Substantial Completion, Punch List, Final Acceptance; Early Opening of Portions of the Project

7.7.1 Substantial Completion

7.7.1.1 GDOT will issue a written certificate of Substantial Completion at such time as Substantial Completion occurs which shall be subject to the terms and conditions of this Article 7.7.1.

7.7.1.2 Substantial Completion shall occur upon satisfactory completion of the requirements of GDOT Standard Specification 108.07.G.

7.7.1.3 All comments from EPD on the Post-Construction Stormwater Report have been addressed by the DB Team, and the EPD's 90-day Post-Construction Stormwater Report disapproval period has expired.

7.7.1.4 DB Team shall provide GDOT with not less than 20 days prior written notification of the date DB Team determines it will achieve Substantial Completion. A written request for Substantial Completion will not be taken into consideration unless the requirements of the DB Documents have been met, and the request has been approved in writing by GDOT confirming Substantial Completion requirements of Article 7.7 are met. During such notice period, DB Team and GDOT shall meet and confer and exchange information on a regular cooperative basis with the goal being GDOT's orderly, timely inspection and review of the Project per the applicable Final Plans and Construction Documents, and GDOT's issuance of a written certificate of Substantial Completion.

7.7.1.5 During the period specified in Article 7.7.1.4, GDOT shall conduct an inspection of the Project and its components, a review of the applicable Final Plans and Construction Documents and such other investigation as may be necessary to evaluate whether Substantial Completion is achieved. GDOT shall deliver a Punch List to the DB Team following such inspection, review and investigation within five Business Days. GDOT shall then either (a) issue the written certificate of Substantial Completion or (b) notify DB Team in writing setting forth, as applicable, why the Project has not reached Substantial Completion. If GDOT and DB Team cannot agree that the Substantial Completion has been completed by the Substantial Completion Date defined in Exhibit 9, such Dispute shall be resolved according to Article 17.

7.7.2 Punch List

7.7.2.1 GDOT will prepare and maintain the final Punch List. Each participant shall have the right to add items to the Punch List, and none shall remove any item added by any other without such other's express permission. If DB Team objects to the addition of an item by GDOT, the item shall be noted as

included under protest, and if the Parties thereafter are unable to reconcile the protest, the Dispute shall be resolved according to Article 17.

7.7.2.2 DB Team shall immediately commence work on the Punch List items and diligently prosecute such work to completion, consistent with the DB Documents, prior to issuance of Final Acceptance.

7.7.3 Final Acceptance

7.7.3.1 Promptly after achieving Substantial Completion, DB Team shall perform all remaining Work for the Project, including completion of all Punch List items, all landscaping other than vegetative ground cover, and aesthetic features. DB Team shall prepare and adhere to a timetable for planting and establishing the vegetative ground cover landscaping, taking into account weather conditions necessary for successful planting and growth, which timetable shall in any event provide for vegetative ground cover landscaping to be planted and established by 12 months after Substantial Completion.

7.7.3.2 GDOT will issue a written certificate of Final Acceptance at such time as all of the following have occurred for the Project:

(a) All requirements for Substantial Completion have been satisfied;

(b) All Punch List items have been completed and delivered to the reasonable satisfaction of GDOT;

(c) GDOT has received a complete set of the Record Drawings in form and content required by Section 2.7.1.2 of the Technical Provisions;

(d) All Utility Adjustment Work and other work that DB Team is obligated to perform for or on behalf of third parties has been accepted by such third parties, and DB Team has paid for all work by third parties that DB Team is obligated to pay for, other than disputed amounts;

(e) DB Team has paid in full all Liquidated Damages that are due to GDOT pursuant to this Agreement and are not in Dispute, and has provided to GDOT reasonable security for the full amount of Liquidated Damages that may then be the subject of an unresolved Dispute;

(f) There exist no uncured DB Team Defaults that are the subject of a Warning Notice, or with the giving of notice or passage of time, or both, could become the subject of a Warning Notice (except any DB Team Default for which Final Acceptance will affect its cure);

(g) DB Team has received, and paid all associated fees for, all applicable Governmental Approvals and other applicable third-party approvals required pursuant to the DB Documents, and there

exists no uncured material violation of the terms and conditions of any such Governmental Approval or other third-party approvals;

(h) DB Team has delivered to GDOT all warranties, manuals and other Deliverables as required pursuant to the Technical Provisions; and

(i) DB Team has delivered to GDOT verification of all required post construction period, including completed operations, Insurance Policies required under the DB Documents.

7.7.3.3 DB Team shall provide GDOT with written notification when DB Team determines it has achieved Final Acceptance. During the 15 Business Day period following receipt of such notification, DB Team and GDOT shall meet and confer and exchange information on a regular cooperative basis with the goal being GDOT's orderly, timely inspection and review of the Project and the Record Drawings, and GDOT's issuance of a written certificate of Final Acceptance.

7.7.3.4 During such 15 Business Day period, GDOT shall conduct an inspection of the Punch List items, a review of the Record Drawings and such other investigation as may be necessary to evaluate whether the conditions to Final Acceptance are satisfied. GDOT shall deliver a written report of findings and recommendations to DB Team following such inspection, review and investigation and in any case by the end of such 15 Business Day period.

7.7.3.5 Within five Business Days after expiration of such 15 Business Day period GDOT shall either (a) issue a certificate of Final Acceptance or (b) notify DB Team in writing setting forth, as applicable, why Final Acceptance has not been achieved. If GDOT and DB Team cannot agree as to the date of Final Acceptance, such Dispute shall be resolved according to Article 17.

7.7.4 Early Opening of Portions of the Project

If the DB Team determines that a portion of the Work, including any Interim Completion Deadline, is safe to open to traffic, that portion must include the following prior to being considered safe to open: all lanes in that direction paved to final pavement surface layer, permanent striping (temporary tape may be used in lane drop tapers), temporary signing, and temporary barrier wall installed. When it determines that that portion of Work is safe to open, the DB Team may notify GDOT thereof through written notice identifying the portion of the Work and asserting that the DB Team, including the EOR, believes that it is safe to open.

The DB Team and GDOT together will inspect that portion of the Work asserted to be safe to open. GDOT will respond within five Business Days after the agreed-upon date of the inspection. If GDOT concurs, GDOT will provide written notice to the DB Team that such portion of the Segment is safe to open. If GDOT does not concur, it will provide the DB Team a list of the items that need to be corrected or completed prior to opening that portion of the Work. This process will repeat until GDOT concurs and provides written notice that that portion of the Work is safe to open and will identify the date when GDOT's

determination was made. The date so identified is the Interim Completion Date for that portion of the Work.

If the Interim Completion Date is later than the Interim Completion Deadline, as identified in Exhibit 9 to the Agreement, the DB Team is liable for Liquidated Damages per Article 17.4.1.

The DB Team remains responsible for all repair or replacement for portions of the Work released prior to Final Acceptance. Maintenance responsibilities remain with the DB Team until GDOT issues Final Acceptance. Designation of safe to open for any portion of the Project shall not start a warranty period for any portion of the Work or void or alter any terms of the Agreement.

Opening of portions of the Project prior to Substantial Completion or Final Acceptance does not constitute acceptance of the Work or a waiver of any provisions of the DB Documents.

7.8 Hazardous Materials Management

DB Team shall comply with all requirements set forth in GDOT Standard Specification 107.22 and Exhibit 11.

7.9 Environmental Compliance

Throughout the course of the Design Work and Construction Work, DB Team's Work shall take into account, be coordinated to allow for, and be performed in accordance with all environmental mitigation measures required under the Environmental Document approvals, including but not limited to the NEPA/GEPA Approval and any other Governmental Approvals for the Project or under the DB Documents, and shall comply with all other conditions and requirements of the Environmental Approvals in accordance with Section 4 of the Technical Provisions, provided that the foregoing shall not require nor imply any requirement for DB Team to perform any remediation or disposal of Pre-existing Hazardous Materials or GDOT Release(s) of Hazardous Materials.

7.10 Meetings

7.10.1 DB Team shall conduct regular progress meetings with GDOT during the course of Design Work and Construction Work. These meetings shall be attended by the DB Team's Lead Contractor's project manager and the Engineer of Record or Authorized Representatives of each and any other Key Personnel and other personnel as needed for productive use of the meetings.

7.10.2 In addition, GDOT and DB Team, through their respective Authorized Representatives, shall meet from time to time at the other Party's request to discuss and resolve matters relating to the Work or the Project.

7.10.3 DB Team shall schedule all meetings with GDOT at a date, time, and place reasonably convenient to both Parties and, except in the case of urgency, shall provide GDOT with written notice and a meeting agenda at least one Business Day in advance of each meeting, in the absence of any timeframe specified in the Technical Provisions.

7.10.4 DB Team shall be responsible to document and maintain the full subject matter of all meetings and shall distribute copies of meeting minutes to GDOT not later than the timeframes specified in the Technical Provisions, and in the absence of any specified timeframe, within five days following such meetings.

7.11 Contractor Warranties and Correction of Non-Conforming and Defective Work

7.11.1 DB Team shall obtain customary and reasonable warranties from all Contractors with respect to design, materials, workmanship, installations, equipment, tools, supplies, software or services, all of which DB Team shall cause to be expressly extended and assigned to GDOT, or its designee; provided that the foregoing requirement shall not apply to standard, pre-specified manufacturer warranties of mass-marketed materials, products (including software products), equipment or supplies where the warranty cannot be extended to GDOT using commercially reasonable efforts. To the extent that any Contractor warranty would be voided by reason of DB Team's negligence in incorporating material or equipment into the Work, DB Team shall be responsible for correcting such defect.

7.11.2 Contractor warranties (if any) are in addition to all rights and remedies available under the DB Documents or applicable Law or in equity, and shall not limit DB Team's liability or responsibility imposed by the DB Documents or applicable Law or in equity with respect to the Work, including liability for design defects, latent construction defects, strict liability, breach, negligence, willful misconduct or fraud.

7.11.3 When any act, omission, or other action of DB Team occurs that violates the requirements, conditions, or terms of the DB Documents, or affects the health, safety, or welfare of the public or natural resources, GDOT shall have the right, but not the obligation, to require and direct DB Team to take prompt action to replace, repair, or restore such damage, injury or condition within a time frame established by GDOT, at DB Team's sole cost and expenses and without entitlement to a Relief Event or Compensation Event.

7.12 Maintenance During Construction Work

7.12.1 GDOT shall be responsible for the operation and maintenance of the Existing Right of Way and any acquired right or interest in any Required Right of Way until the Construction Commencement Date. Upon NTP 3, DB Team shall assume full responsibility for maintenance of all Elements within the Construction Maintenance Limits in accordance with the Construction Maintenance Limits Plan and the requirements of the DB Documents.

7.12.2 Upon Final Acceptance, GDOT will assume responsibility for the operation and maintenance of the entire Project, provided that where GDOT has opened any portion of the Project to the public prior to Final Acceptance, GDOT shall then assume responsibility for the operations and maintenance of such portions of the Project at such earlier time, provided, however that in all cases, DB Team shall remain responsible for all Work until Final Acceptance and nothing contained herein shall otherwise limit any warranty obligations of DB Team with respect to any Defect or non-conforming Work.

7.13 For Best Value Projects Only: Impact of ATCs on the Project

7.13.1 If implementation of an ATC forming part of the Project requires the approval or consent of any Government Entity (other than GDOT) or other third party, then (a) DB Team will have full responsibility for, and bear the full risk of, obtaining any such approval or consent, and (b) if such approval or consent is not granted, or there is an unreasonable and unjustified delay in obtaining such approval or consent (subject to Article 13) (i) DB Team shall perform the Work as if such ATC had never formed part of the Project, and (ii) shall not be entitled to any additional time or compensation as a result thereof. The foregoing shall not limit DB Team's rights under Article 14.2 (l) for Compensation Events or under Article 14.1.1 (s) for Relief Event on account of delays or impact costs solely related to the re-evaluation of the NEPA Approval after expiration of the GDOT Re-evaluation Period.

Article 8 SECURITY AND INCIDENT RESPONSE

8.1 Security and Incident Response

8.1.1 DB Team is responsible for the safety and security of the applicable portion of the Project that is under the control of any DB Team-Related Entity and the workers and public thereon during the performance of the Work.

8.1.2 DB Team shall comply with all rules, directives and guidance of the U.S. Department of Homeland Security and comparable State agency, and shall coordinate and cooperate with all Governmental Entities providing security, first responder and other public emergency response services, including, without limiting the foregoing, whenever the National Terrorism Advisory System (NTAS) or successor system issues an "Imminent" or "Elevated" Threat Alert or comparable level of threat or alert for any region in which the Project is located or which the Project serves. Unless directed otherwise by GDOT, DB Team, at its expense, shall assign management personnel with decision-making authority to be personally present at the relevant emergency operations center serving the region, including during a disaster affecting the Project proclaimed by the Governor of Georgia, the President of the United States, or their respective designees. DB Team shall provide such service 24 hours a day, seven days a week, until such level or threat or alert has expired, or until the lead agency at the operations center determines such staffing level is no longer necessary.

8.1.3 DB Team shall perform and comply with the provisions of the Technical Provisions concerning Incident Response, safety and security.

Article 9 MANAGEMENT SYSTEMS AND OVERSIGHT

9.1 Project Management

9.1.1 DB Team is responsible for all activities necessary to manage the Work, including the Utility Adjustment Work. DB Team shall undertake all required aspects of for the Project and Work in accordance with the DB Documents and Good Industry Practice.

9.1.2 DB Team shall develop the necessary plans and documentation in accordance with the Proposal, this Agreement, and Section 2 and Section 3 of the Technical Provisions, and Good Industry Practice.

9.1.3 DB Team shall submit to GDOT for acceptance in its good faith discretion in accordance with the procedures described in Article 6.3 of this Agreement and the Technical Provisions each component part, plan and any proposed changes or additions to or revisions of any such component part, plan or other documentation identified in the DB Documents. Each component part, plan and other documentation of the Management Plans or any submittal identified in this Agreement, Section 3 of the Technical Provisions, including in Table 3-1, and the DB Documents, and each proposed change or addition to or revision of any such component part, plan or other documentation shall constitute a separate Submittal for purposes of Article 6.3. GDOT may propose any change required to comply with Good Industry Practice or to reflect a change in working practice to be implemented by DB Team.

9.1.4 DB Team shall not commence or permit the commencement of any aspect of the design or construction before the relevant component parts, plans and other documentation of the Management Plans applicable to such Work have been submitted to and accepted by GDOT.

9.1.5 Reserved

9.1.6 DB Team shall carry out internal audits of the Management Plans at the times prescribed in the Management Plans.

9.1.7 DB Team shall cause each of its Contractors at every level to comply with the applicable requirements of the DB Documents.

9.1.8 The DB Team shall designate a Quality Assurance Manager who shall, irrespective of their other responsibilities, have defined authority for ensuring the establishment and maintenance of the Management Plans and reporting to GDOT on the performance of the Management Plans.

9.2 Traffic Management

9.2.1 Upon GDOT issuance of NTP 3 and until Final Acceptance of the Project, DB Team shall be responsible for the general management of traffic on the applicable portion of the Project under the control of any DB Team-Related Entity. DB Team shall manage traffic to preserve and protect safety of traffic on such portions and Related Transportation Facilities and, to the maximum extent practicable, to avoid disruption, interruption or other adverse effects on traffic flow, throughput or level of service on the Related Transportation Facilities. DB Team shall conduct and carry out traffic management in accordance with all applicable Technical Provisions, Technical Documents, Laws and Governmental Approvals, and in accordance with the Transportation Management Plan, as well as any directives as may be required pursuant to Article 8.1.2.

9.2.2 DB Team shall prepare and submit to GDOT, for GDOT acceptance, a Transportation Management Plan by Project Phase for managing traffic on the Project and Related Transportation Facilities, during the period of construction (from the period

from NTP 3 to Final Acceptance), addressing (a) orderly and safe movement and diversion of traffic on the Project and Related Transportation Facilities, and (b) orderly and safe diversion of traffic on the Related Transportation Facilities necessary in connection with field maintenance and repair work in response to Incidents, Emergencies and lane closures. The Transportation Management Plan shall promote safe and efficient operation of the Project and Related Transportation Facilities at all times during construction of the Project, including during Utility Adjustment Work. DB Team shall prepare the Transportation Management Plan according to the schedule set forth in Section 18 of the Technical Provisions. The Transportation Management Plan shall comply with the Technical Provisions and Technical Documents concerning traffic management and traffic operations.

9.2.3 GDOT shall have at all times, without obligation or liability to DB Team, the right to:

9.2.3.1 Issue a Directive Letter to DB Team regarding traffic management and control (with which DB Team shall comply), or directly assume traffic management and control, of the Project during any period that:

(a) GDOT designates the Project or portion of the Project for immediate use as an emergency evacuation route or a route to respond to a disaster proclaimed by the Governor of Georgia, the President of the United States, or by any other federal or State agency, or any of the aforementioned respective designees, including reversing the direction of traffic flow during such period,

(b) GDOT designates the Project or a portion of the Project for immediate use as an alternate route for diversion of traffic from any interstate or Highway temporarily closed to all lanes in one or both directions due to Incident or Emergency, or

(c) the Commissioner determines such action will be in the public interest as a result of an emergency or natural disaster; and

9.2.3.2 Provide on the Project, via message signs or other means consistent with Good Industry Practice, non-discriminatory traveler and driver information, and other public information (e.g. AMBER alerts), provided that the means to disseminate such information does not materially interfere with the Work.

Article 10 CONTRACTING AND LABOR PRACTICES

10.1 Reserved

10.2 Responsibility for Work, Contractors and Employees

10.2.1 DB Team shall retain or cause to be retained only Contractors that are qualified, experienced and capable in the performance of the portion of the Work assigned. DB Team shall assure that each Contractor has at the time of execution of the Contract, and maintains at all times during performance of the assigned Work, all

licenses required by applicable Laws. DB Team shall require all Contractors to adhere to the requirements herein with respect to Subcontractors.

10.2.2 The retention of Contractors by DB Team will not relieve DB Team of its responsibilities hereunder or for the quality of the Work or materials or services provided by it.

10.2.3 Each Contract shall include terms and conditions sufficient to ensure compliance by all Contractors and Subcontractors, all parties performing any Work on behalf thereof, with the requirements of the DB Documents, and shall include those terms that are specifically required by the DB Documents to be included therein, including, to the extent applicable, those set forth in Exhibit 8 and any other applicable Federal Requirements.

10.2.4 Nothing in the DB Documents will create any contractual relationship between GDOT and any Subcontractor. No Contract entered into by or under DB Team shall impose any obligation or liability upon GDOT to any Subcontractor, or any of their respective employees.

10.2.5 DB Team shall supervise and be fully responsible for the actions, omissions, negligence, willful misconduct, or breach of applicable Law or contract by any Contractor or DB Team-Related Entity, or their respective members, officers, directors, partners, and employees, as though DB Team directly employed all such individuals.

10.3 Reserved

10.4 Key Personnel

10.4.1 DB Team shall retain, employ and utilize the individuals specifically listed in Exhibit 2 to fill the corresponding Key Personnel positions listed therein. DB Team shall not change or substitute any such individuals except due to retirement, death, disability, incapacity, or voluntary or involuntary termination of employment, or as otherwise accepted by GDOT pursuant to Article 10.4.2. In such circumstances, DB Team shall promptly propose a replacement with comparable experience for such position.

10.4.2 DB Team shall notify GDOT in writing of any proposed replacement for any Key Personnel position. Any proposed replacement for a Key Personnel position must be equal or better than the original Key Personnel. GDOT shall have the right to review the qualifications and character of each individual to be appointed to a Key Personnel position (including personnel employed by Contractors to fill any such position) and to accept or disapprove use of such individual in such position prior to the commencement of any Work by such individual. If DB Team fails to provide a proposed replacement that is sufficiently qualified, in GDOT's sole discretion, within 30 days after notifying GDOT of a proposed replacement for any Key Personnel position, then such failure may, at GDOT's sole discretion, constitute a DB Team Default pursuant to Article 17.1.1.

10.4.3 DB Team shall cause each individual filling a Key Personnel position to dedicate the full amount of time necessary for the proper prosecution and performance of the Work.

10.4.4 DB Team shall provide to GDOT the phone numbers and email addresses for all Key Personnel. GDOT requires the ability to contact Key Personnel 24 hours per day, seven days per week.

10.5 Reserved

10.6 Labor Standards

10.6.1 In the performance of its obligations under the DB Documents, DB Team at all times shall comply, and require by contract that all Contractors and vendors comply, with all applicable federal and State labor, occupational safety and health standards, rules, regulations and federal and State orders.

10.6.2 All individuals performing the Work shall have the skill and experience and any licenses or certifications required to perform the Work assigned to them.

10.6.3 If any individual employed by DB Team or any Contractor is not performing the Work in a proper, safe and skillful manner, then DB Team shall, or shall cause such Contractor to, remove such individual and such individual shall not be re-employed on the Work. If, after notice and reasonable opportunity to cure, such individual is not removed or if DB Team fails to ensure that skilled and experienced personnel are furnished for the proper performance of the Work, then GDOT may suspend the affected portion of the Work by delivering to DB Team written notice of such suspension. Such suspension shall in no way relieve DB Team of any obligation contained in the DB Documents or entitle DB Team to any additional compensation or time extension hereunder.

10.6.4 DB Team and its Contractors shall comply with the Georgia Immigration & Compliance Act ("Immigration Act"), O.C.G.A. § 13-10-90, *et seq*. DB Team must certify compliance with the Immigration Act using the form attached as Exhibit 19. The required certificates and affidavits must be filed with GDOT and copies maintained by DB Team and each Contractor as of the Effective Date, recertified as of July 15 of each year, and again recertified upon final completion of the Work under the applicable Contract. State officials, including officials of the Georgia Department of Labor and GDOT, retain the right to inspect and audit the Project and employment records of DB Team and all Contractors without notice during normal working hours until the Work under the applicable Contract is complete, and as otherwise specified by Law.

10.7 Reserved

10.8 Non-Discrimination; Equal Employment Opportunity

10.8.1 DB Team shall not, and shall cause the Contractors to not, discriminate on the basis of race, color, national origin, sex, age, religion or handicap in the performance of the Work under the DB Documents. DB Team shall carry out, and shall cause the Contractors to carry out, applicable requirements of 49 CFR Part 26. Failure by DB Team to carry out these requirements is a material breach of this Agreement, which may result in a Default Termination Event and the termination of this Agreement or such other remedy permitted hereunder as GDOT deems appropriate (subject to DB Team's rights to notice and opportunity to cure set forth in this Agreement), but is not limited to (1) withholding monthly progress payments; (2)

assessing sanctions; (3) liquidated damages; and/or (4) disqualifying the Contractor from future bidding as non-responsible.

10.8.2 DB Team shall include the immediately preceding paragraph in every Contract (including purchase orders and in every Contract of any DB Team-Related Entity for Work), and shall require that they be included in all Contracts at lower tiers, so that such provisions will be binding upon each Contractor.

10.9 Disadvantaged Business Enterprise

10.9.1 General

10.9.1.1 DB Team shall comply with 49 CFR Part 26 and GDOT's Disadvantaged Business Enterprise (DBE) policy and program. The purpose of GDOT's DBE policy and program is to ensure that DBEs shall have an equal opportunity to participate in the performance of contracts financed in whole or in part with federal funds. DB Team shall comply with all applicable requirements set forth in GDOT's DBE policy and program.

10.9.1.2 DB Team shall include provisions to effectuate GDOT's DBE policy and program in every Contract to which it is a party (including purchase orders and task orders for Work), and shall require that they be included in all Contracts at lower tiers (including purchase orders and task orders for Work), so that such provisions will be binding upon each Contractor. The DB Team shall ensure that all contracts and subcontracts (including purchase orders and task orders for Work) with DBEs to supply labor or materials are required to be performed in accordance with 49 CFR § 26.53.

10.9.1.3 DB Team shall maintain a dedicated DBE manager throughout the Term of the Agreement. The DBE manager must be approved by GDOT and cannot be replaced except by prior GDOT approval.

10.9.2 DBE Participation Goals

10.9.2.1 The DBE Project goal is 8 percent of the overall Project cost (including design, construction, professional services, management and administration, and inspection) with respect to the race conscious participation by the DB Team. DB Team's DBE commitments list is attached as Exhibit 14.

10.9.2.2 DB Team shall exercise good faith efforts to achieve such DBE participation goal for the Project.

10.9.2.3 DBE reporting shall meet all FHWA and GDOT's DBE policy and program requirements except that reporting will be done quarterly throughout the Term of the Agreement. Failure to meet the participation goal or any of the commitments made in Exhibit 14 in any two consecutive quarters shall require a recovery plan. The recovery plan shall be submitted within 30 Days from the quarterly reporting describing why the participation goal was not achieved and why commitment(s) are not met. In addition, describe proposed actions to be taken in subsequent quarters to attain the participation goal and meet Exhibit 14

commitments. The recovery plan and proposed actions must be acceptable by GDOT and FHWA.

10.9.3 Compliance with DBE Participation Goals

10.9.3.1 DB Team shall not terminate, and shall not allow a Contractor to terminate, a DBE Subcontractor listed in its Proposal (or an approved substitute DBE firm) without GDOT's prior written consent. This includes, but is not limited to, instances in which a Contractor seeks to perform work originally designated for a DBE Subcontractor with its own forces or those of an affiliate, a non-DBE firm, or with another DBE firm.

10.9.3.2 DB Team shall include a provision in every Contract to which it is a party stating that the Contractor shall utilize the specific DBEs listed to perform the work and supply the materials for which each is listed unless the contractor obtains GDOT's consent as provided in 49 CFR Part 26.3(f) and that unless GDOT's consent is provided under 49 CFR Part 26.3(f), the Contractor shall not be entitled to any payment for work or material unless it is performed or supplied by the listed DBE.

10.9.3.3 DB Team shall make available to GDOT upon request a copy of all DBE subcontracts.

10.9.3.4 Before transmitting to GDOT a request to terminate and/or substitute a DBE Subcontractor, the DB Team or Contractor must give notice in writing to the DBE Subcontractor, with a copy to GDOT, of its intent to request to terminate and/or substitute, and the reason for the request. The DB Team or Contractor must give the DBE five Business Days to respond to the notice and advise GDOT and the DB Team or Contractor of the reasons, if any, why it objects to the proposed termination of its subcontract and why GDOT should not approve the termination and/or substitution.

10.9.3.5 GDOT may only provide written consent allowing the DB Team or a Contractor to terminate a DBE firm listed in the Proposal if GDOT agrees that that the DB Team or Contractor has good cause to terminate the DBE firm. For the purposes of 49 CFR Part 26.3(f), good cause includes the following circumstances:

(a) The listed DBE Subcontractor fails or refuses to execute a written contract;

(b) The listed DBE Subcontractor fails or refuses to perform the work of its subcontract in a way consistent with normal industry standards. Provided, however, that good cause does not exist if the failure or refusal of the DBE Subcontractor to perform its work on the subcontract results from the bad faith or discriminatory action of the DB Team or Contractor;

(c) The listed DBE Subcontractor fails or refuses to meet the DB Team's or Contractor's reasonable, nondiscriminatory bond requirements.

(d) The listed DBE Subcontractor becomes bankrupt, insolvent, or exhibits credit unworthiness;

(e) The listed DBE Subcontractor is ineligible to work on public works projects because of suspension and debarment proceedings pursuant 23 CFR Parts 180, 215 and 1200 or applicable state law;

(f) The listed DBE Subcontractor voluntarily withdraws from the project and provides written notice of its withdrawal;

(g) GDOT has determined that the listed DBE Subcontractor is not a responsible contractor;

(h) The listed DBE is ineligible to receive DBE credit for the type of work required;

(i) A DBE owner dies or becomes disabled with the result that the listed DBE contractor is unable to complete its work on the contract; or

(j) Other documented good cause that GDOT determines compels the termination of the DBE Subcontractor. Provided, that good cause does not exist if the DB Team or Contractor seeks to terminate a DBE it relied upon to obtain the work so that the DB Team or Contractor can self-perform the work for which the DBE contractor was engaged or so that the DB Team or Contractor can substitute another DBE or non-DBE contractor after contract award.

10.9.3.6 When a DBE Subcontractor is terminated as provided above, or fails to complete its work for any reason, DB Team or Contractor is required to make good faith efforts to find another DBE Subcontractor to substitute for the original DBE. These good faith efforts shall be directed at finding another DBE to perform at least the same amount of work under the Contract as the DBE that was terminated, to the extent needed to meet the established DBE participation goal. The good faith efforts shall be documented by the DB Team or Contractor. If GDOT requests documentation of such good faith efforts, the DB Team or Contractor shall submit the documentation within seven days, which may be extended for an additional seven days if necessary at the request of the DB Team or Contractor, and GDOT shall provide a written determination stating whether or not good faith efforts have been demonstrated.

10.10 Job Training Program

10.10.1 DB Team, at its own cost and expense, shall include on-the-job training and shall submit to GDOT for review and acceptance a plan meeting all requirements set forth in GDOT Standard Specification 158. There are 5,000 required training hours for this Project.

10.11 Prevailing Wages

10.11.1 DB Team shall pay or cause to be paid to all applicable workers employed by it or its Contractors to perform the Work not less than the prevailing rates of wages, as provided in the statutes and regulations applicable to public work contracts, including the Davis-Bacon Act, and as provided in Exhibit 8. DB Team shall comply and cause its Contractors to comply with all Laws pertaining to prevailing wages. For the purpose of applying such Laws, the Project shall be treated as a public work paid for in whole or in part with public funds (regardless of whether public funds are actually used to pay for the Project). The foregoing shall not apply to Contracts at any tier with Governmental Entities.

10.11.2 It is DB Team's sole responsibility to determine the wage rates required to be paid. In the event rates of wages and benefits change while this Agreement is in effect, DB Team shall bear the cost of such changes and shall have no claim against GDOT on account of such changes. Without limiting the foregoing, no claim will be allowed which is based upon DB Team's lack of knowledge or a misunderstanding of any such requirements.

10.11.3 DB Team shall comply and cause its Contractors, other than GDOT or Governmental Entities acting as Contractors, to comply with all Laws regarding notice and posting of intent to pay prevailing wages, of prevailing wage requirements and of prevailing wage rates.

10.12 Prompt Payment to Contractors and Pay When Paid Provisions

DB Team shall comply with the Georgia Prompt Payment Act, Code Section 13-11-1 *et seq*. Further, neither DB Team, the Design-Build Contractor or Contractor, nor any Subcontractor shall impose retainage upon any consultant, laborer, subcontractor, vendor, materialman, or supplier with whom any of them have contracted.

10.13 Suspension and Debarment

DB Team shall deliver to GDOT, not later than January 31 of each year through Final Acceptance, and upon Final Acceptance, signed certifications regarding suspension, debarment, ineligibility, voluntary exclusion, convictions and civil judgments from DB Team, from each affiliate of DB Team (as "affiliate" is defined in 29 CFR 98.905 or successor regulation of similar import), and from each Contractor whose Contract amount equals or exceeds $100,000. The annual certification shall be substantially in the form of paragraphs 1.a through 1.d of Attachment 7 to Exhibit 8 (Federal Requirements).

10.14 DB Team Identification

Any uniforms, badges, logos and other identification worn by personnel of DB Team-Related Entities or on DB Team Vehicles used to access the Project Site shall bear contrasting colors, lettering, design or other features, clearly visible from a distance, to ensure clear differentiation from those of GDOT and its employees.

Article 11 RELATED AND OTHER FACILITIES

11.1 Integration with Related Transportation Facilities

11.1.1 DB Team shall locate, configure, design, and construct the termini, interchanges, entrances and exits of the Project so that the Project will be compatible and integrated with the location, configuration, design, operation and maintenance of, and provide a smooth, safe transition of traffic to and from, Related Transportation Facilities, as set forth in Section 1 and Section 11 of the Technical Provisions. The design for the Project shall include and provide for such compatibility, integration and transition. The design and construction of the Project, shall satisfy all provisions of the Technical Provisions and Management Plans relating to compatibility, integration and transition with or at Related Transportation Facilities, including those concerning signage, signaling and communications with Users.

11.1.2 Without limiting the foregoing, DB Team shall cooperate and coordinate with GDOT and any third party that owns, constructs, manages, operates or maintains a Related Transportation Facility with regard to the construction, maintenance and repair programs and schedules for such Related Transportation Facilities, in order to minimize disruption to the operation thereof.

11.1.3 To assist DB Team, GDOT shall provide to DB Team during normal working hours, reasonable access to plans, surveys, drawings, as-built drawings, specifications, reports and other documents and information in the possession of GDOT or its contractors and consultants pertaining to Related Transportation Facilities. DB Team, at its expense, shall have the right to make copies of the same. DB Team, at its expense, shall conduct such other inspections, investigations, document searches, surveys and other work as may be necessary to achieve compatibility, integration and transition with those Related Transportation Facilities identified in Section 11 of the Technical Provisions.

11.1.4 GDOT shall provide reasonable assistance to DB Team, upon its request and at its expense, in obtaining cooperation and coordination from third parties that own, manage, operate or maintain Related Transportation Facilities and in enforcing rights, remedies and warranties that DB Team may have against any such third parties. Such assistance may include GDOT's participation in meetings and discussions. In no event shall GDOT be required to bring any legal action or proceeding against any such third party.

11.1.5 GDOT shall have at all times, without obligation or liability to DB Team, the right to conduct traffic management activities on GDOT's Related Transportation Facilities and all other facilities of the State transportation network in the area of the Project in accordance with its standard traffic management practices and procedures in effect from time to time.

Article 12 SAFETY COMPLIANCE

12.1 Safety Compliance

12.1.1 DB Team shall take all reasonable precautions and be solely responsible for the safety of, and shall provide protection to prevent damage, injury, or

loss to, all persons on the Site or who would reasonably be expected to be affected by the Work, including individuals performing Work, employees of GDOT and its consultants, visitors to the Site and members of the traveling public who may be affected by the Work. DB Team shall at all times comply with all health and safety requirements contained in the DB Documents and DB Team's Safety Plan and all such requirements under applicable Law.

12.1.2 Safety Compliance Orders

12.1.2.1 GDOT shall use good faith efforts to inform DB Team at the earliest practicable time of any circumstance or information relating to the Project which in GDOT's reasonable judgment is likely to result in unsafe conditions for the public, which may result in the issuance of a Safety Compliance Order. Except in the case of Emergency, GDOT shall consult with DB Team prior to issuing a Safety Compliance Order concerning the risk to public safety, alternative compliance measures, cost impacts, and the availability of DB Team resources to fund the Safety Compliance work.

12.1.2.2 GDOT's duties shall include monitoring and inspecting for the purpose of determining whether any circumstances exist that warrant issuance of a Safety Compliance Order with respect to the Design Work and the Construction Work, and giving reports and recommendations to DB Team with respect thereto.

12.1.2.3 Subject to conducting such prior consultation, GDOT may issue Safety Compliance Orders to DB Team at any time from and after the Effective Date.

12.1.3 Duty to Comply

12.1.3.1 Subject to Article 12.1.1, DB Team shall implement all Safety Compliance as expeditiously as reasonably possible following issuance of the Safety Compliance Order. DB Team shall diligently prosecute the work necessary to achieve such Safety Compliance until completion, subject to any remedies allowed from the occurrence of a Relief Event.

12.1.3.2 DB Team shall perform all work required to implement Safety Compliance at DB Team's sole cost and expense. Without limiting the foregoing and for the avoidance of doubt, in no event shall DB Team be entitled to (a) issue a Change Request, or (b) except as provided in Article 12.1.3, claim that a Compensation Event or Relief Event has occurred or resulted from the existence of a Safety Compliance Order.

12.1.4 Contesting Safety Compliance Orders

DB Team may contest a Safety Compliance Order by delivering to GDOT written notice setting forth (a) DB Team's claim that no Safety Compliance conditions exist to justify the Safety Compliance Order, (b) DB Team's explanation of its claim in reasonable detail and (c) DB Team's estimate of impacts on costs and schedule attributable to the contested Safety Compliance Order. If GDOT does not receive such written notice prior to issuance of a Safety Compliance Order, or within 15 days after GDOT issues an emergency Safety Compliance Order, then DB Team thereafter shall have no right to contest. If DB Team

timely contests a Safety Compliance Order, DB Team nevertheless shall implement the Safety Compliance Order, but if it is finally determined under the Dispute Resolution Procedures that Safety Compliance conditions did not exist, then the Safety Compliance Order shall be treated as a Directive Letter for a GDOT Change.

Article 13 GDOT CHANGES; DB TEAM CHANGES; DIRECTIVE LETTERS

This Article 13 sets forth the requirements for obtaining all Supplemental Agreements under this Agreement. DB Team hereby acknowledges and agrees that the Contract Sum is full and adequate compensation for performance of all of the Work, subject only to those exceptions specified in Article 14 and this Article 13.

DB Team unconditionally and irrevocably waives the right to any monetary compensation or other relief in addition to that specifically provided under the terms of this Agreement, except in accordance with Article 14 and this Article 13. The foregoing waiver encompasses all theories of liability, whether in contract, tort (including negligence), equity, quantum meruit or otherwise, and encompasses all theories to extinguish contractual obligations, including impracticability, mutual mistake, and frustration of purpose. Nothing in the Technical Provisions or Technical Documents shall have the intent or effect or shall be construed to create any right of DB Team to any Supplemental Agreement or additional monetary compensation or other relief, any provision in the Technical Provisions or Technical Documents to the contrary notwithstanding.

13.1 Directive Letters

13.1.1 GDOT may at any time issue a Directive Letter to DB Team regarding any matter for which a Supplemental Agreement can be issued or in the event of any Dispute regarding the interpretation of requirements, scope of the Work, or whether DB Team has performed in accordance with the requirements of the DB Documents. The Directive Letter will state that it is issued under this Article 13.1, will describe the Dispute or Work in question, articulate GDOT's position, provide direction, and will state the basis for determining compensation, if any. If applicable and subject to Article 13.2.5, DB Team shall proceed immediately as directed in the letter, pending the execution of a formal Supplemental Agreement (or, if the letter states that the Work is within DB Team's original scope of Work or is necessary to comply with the requirements of the DB Documents, DB Team shall proceed with the Work as directed but shall have the right to assert that a GDOT Change has occurred).

13.1.2 The fact that a Directive Letter was issued by GDOT shall not be considered evidence that in fact that a GDOT Change occurred. The determination whether a GDOT Change in fact occurred shall be based on an analysis of the original requirements of the DB Documents and a determination as to whether the Directive Letter in fact constituted a change in those requirements.

13.1.3 In the event that a Directive Letter is issued, which results in a Force Account, the procedures of Article 14.4 will be followed.

13.2 GDOT Changes

GDOT may, at any time and without notice to any Surety, authorize, cause and/or require, pursuant to a Request for Change Proposal or Directive Letter, changes in the Work, including

additions or deletions, or in terms and conditions of the Technical Provisions or Technical Documents (including changes in the standards applicable to the Work).

13.2.1 GDOT's Request for Change Proposal

13.2.1.1 If GDOT desires to initiate a GDOT Change or to evaluate whether to initiate such a change, then GDOT may, at its discretion, issue a Request for Change Proposal. The Request for Change Proposal shall set forth the nature, extent and details of the proposed GDOT Change.

13.2.1.2 Within seven days after DB Team receives a Request for Change Proposal, or such longer period to which the Parties may mutually agree, GDOT and DB Team shall consult to define the proposed scope of the change. Within seven days after the initial consultation, or such longer period to which the Parties may mutually agree, GDOT and DB Team shall consult concerning the estimated financial and schedule impacts.

13.2.2 Within 30 days following GDOT's delivery to DB Team of the Request for Change Proposal, DB Team shall provide GDOT with a written response as to whether, in DB Team's opinion, the proposed change constitutes a GDOT Change, will impact DB Team's costs and/or will cause a delay to a Completion Deadline, and if so, a detailed assessment of the cost and schedule impact of the proposed GDOT Change, including the following:

13.2.2.1 DB Team's detailed estimate of the impacts on costs of carrying out the proposed GDOT Change;

13.2.2.2 The effect of the proposed GDOT Change on the Project Schedule, including achievement of the Milestone Deadlines, taking into consideration DB Team's duty to mitigate any delay to the extent reasonably practicable; and

13.2.2.3 Any other relevant information related to carrying out the proposed GDOT Change.

13.2.3 GDOT shall be entitled, but not required, to obtain, from a qualified independent consultant of GDOT's choosing, a report prepared in accordance with Good Industry Practice as to the proposed GDOT Change related to the Design Work or the Construction Work, including recommendations and comments concerning DB Team's estimate of the cost impacts and projected impact on the Project Schedule and Milestone Deadlines. GDOT shall pay for the work of any such consultant.

13.2.4 GDOT and DB Team, giving due consideration to any such report and study as may be commissioned by GDOT, shall exercise good faith efforts to negotiate a mutually acceptable Supplemental Agreement, including adjustment of the Project Schedule and Completion Deadlines, any Compensation Amount to which DB Team is entitled, and the timing and method for payment of any Compensation Amount, in accordance with Article 14.

13.2.5 If GDOT and DB Team are unable to reach agreement on a Supplemental Agreement, GDOT may, in its sole discretion, deliver to DB Team a

Directive Letter pursuant to Article 13.1 directing DB Team to proceed with the performance of the Work in question notwithstanding such disagreement under Force Account provisions. Upon receipt of such Directive Letter, (a) DB Team shall implement and perform the Work in question as directed by GDOT and (b) GDOT will make interim payment(s) to DB Team on a monthly basis for the costs of the Work in question subject to Article 5, to the extent they satisfy Force Account provisions.

13.2.6 GDOT shall be responsible for payment of the Compensation Amount agreed upon, or under Force Account provisions, or determined through the Dispute Resolution Procedures, through one of the payment mechanisms set forth in Articles 13.4 and 13.5 and the Project Schedule and Milestone Deadlines shall be adjusted as agreed upon or determined through the Dispute Resolution Procedures, and in accordance with this Article 13 to reflect the effects of the Supplemental Agreement.

13.3 DB Team Changes

13.3.1 DB Team's Change Requests

13.3.1.1 DB Team may request GDOT to accept modifications to the Technical Provisions or Technical Documents by submittal of a written Change Request using a form approved by GDOT. The Change Request shall set forth DB Team's detailed estimate of impacts on costs and schedule attributable to the requested change.

13.3.1.2 GDOT, in its sole discretion, may accept or reject any Change Request proposed by DB Team, provided that GDOT will accept a Change Request necessary to bring the Technical Provisions or Technical Documents into compliance due to an applicable Change in Law per Article 14.2(a). GDOT may condition its acceptance on new or a modification of compensation for GDOT under this Agreement in order to benefit equally in the estimated net cost savings and revenue benefit, if any, attributable to the proposed change. If GDOT accepts such change, DB Team shall execute a Supplemental Agreement and shall implement such change in accordance with the Supplemental Agreement, applicable Technical Provisions, Technical Documents, the Management Plans, Good Industry Practice, and all applicable Laws.

13.3.1.3 DB Team shall be solely responsible for payment of any increased costs and for any Project Schedule delays or other impacts resulting from a DB Team proposed Change Request. If the Change Request results in a decrease in the costs of designing, constructing or operating the Project, the savings in costs shall be allocated between DB Team and GDOT as set forth in the Supplemental Agreement.

13.3.1.4 DB Team may implement and permit a Utility Owner to implement, without a Change Request or Supplemental Agreement, changes to a Utility Adjustment design that do not vary from the Technical Provisions or Technical Documents, but such changes are subject to GDOT's acceptance as part of a Utility Work Plan as provided in Section 6.3.2.5 of the Technical Provisions.

13.3.1.5 No Change Request shall be required to implement any change to the Work that is not specifically regulated or addressed by the DB Documents or applicable Law.

13.3.1.6 Certain minor changes without significant cost savings or revenue benefits may be accepted in writing by GDOT, and in such event, shall not require a Supplemental Agreement. Any other change in the requirements of the DB Documents shall require a Supplemental Agreement.

13.3.2 DB Team's Notice of Compensation Event and/or Relief Event

13.3.2.1 Except as otherwise expressly provided in this Agreement, if at any time DB Team determines that a change to the work has occurred or is imminent, and that change creates a Compensation Event or Relief Event, DB Team shall submit a written notice of Compensation Event and/or Relief Event to GDOT per this Article 13 stating that a Relief Event, Compensation Event, or both has occurred or will occur. The first notice shall be labeled "Compensation/Relief Event No. 1" and subsequent notices shall be numbered sequentially.

13.3.2.2 Time is of the essence in DB Team's delivery of its written notice of Compensation Event or written notice of a Relief Event. Accordingly, if for any reason DB Team fails to deliver a notice of Compensation Event and/or Relief Event in strict accordance with this Article 13.3.2:

(a) Within seven days following the date (herein the "starting date") on which DB Team first became aware (or should have been aware, using all reasonable due diligence) of the Relief Event, DB Team shall be deemed to have irrevocably and forever waived and released the right to relief for adverse effect attributable to the Relief Event accruing after such seven day deadline and until the date DB Team submits the written notice of Compensation Event and/or Relief Event for the Relief Event; and

(b) Within 90 days following the starting date, DB Team shall be deemed to have irrevocably and forever waived and released any and all right to relief (including extension of time for performance of Design Work or Construction Work) for any adverse effect attributable to such Relief Event.

13.3.2.3 Notices for Compensation Events shall include:

(a) a description of the Compensation Event and its date of occurrence in reasonable detail;

(b) the reasons why the DB Team believes additional compensation will or may be due;

(c) a detailed statement of the basis that the work is not required by the Agreement;

(d) identify particular elements of performance for which additional compensation may be sought;

(e) DB Team's current estimate of the anticipated adverse and beneficial effects of the Compensation Event on the Project and on DB Team's ability to perform any of its obligations under the DB Documents;

(f) a written analysis and calculation of DB Team's current estimate of the estimated increase or decrease in costs, (including a separate breakdown of costs that impact design and those that impact construction activities) the extent applicable to the Compensation Event: and

(g) provide an estimate of the time within which a response to the notice is required to minimize cost or delay of performance.

13.3.2.4 If, following issuance of the notice of Compensation event, DB Team receives or becomes aware of any further information relating to the Compensation Event, it shall submit such further information to GDOT not later than seven days of DB Team's receipt or knowledge, as the case may be. GDOT may request from DB Team any further information that GDOT may reasonably require, and DB Team shall supply the same within a reasonable period but not later than seven days after such GDOT request.

13.3.2.5 Notices of Relief Events shall include:

(a) a statement of the Relief Event upon which the delay or inability to perform is based, including its nature, the reasons why the DB Team believes additional time will or may be due, and the date of its occurrence and its actual or, if it has not concluded, its anticipated duration;

(b) the effect of the Relief Event on DB Team's ability to perform any of its obligations under the DB Documents, including details of the relevant obligations,

(c) an impacted delay analysis meeting the requirements of Section 2.5 of the Technical Provisions regarding a Time Impact Analysis and indicating all affected activities on any Critical Path, with activity durations, predecessor and successor activities and resources; and showing Float available pursuant to Article 3.2.5, the likely duration of that effect, and identify any potential impact to the Critical Path affecting a Completion Deadline; and

(d) an explanation of the measures that DB Team proposes to undertake to mitigate the delay and other consequences of the Relief Event.

13.3.2.6 Within seven days of the conclusion of an asserted Relief Event, DB Team shall update its notice of a Relief Event with the date of its

actual or estimated conclusion. If, following issuance of a notice of Relief Event, but prior to its conclusion, DB Team receives or becomes aware of any further information relating to the Relief Event and/or any delay in performance or failure to perform, it shall submit such further information to GDOT not later than seven days after DB Team's receipt or knowledge of the additional information. GDOT may request from DB Team any further information that GDOT may reasonably require, and DB Team shall supply the same within a reasonable period but not later than seven days after such GDOT request.

13.3.2.7 If any notice of Compensation or Relief Event concerns any hazardous condition or material described in Article 7.8, the DB Team shall be deemed to have waived the right to collect any and all costs incurred in connection therewith to the extent that GDOT is not afforded the opportunity to inspect such material or condition before it is disturbed.

13.3.3 Proposed Supplemental Agreement Procedure

13.3.3.1 The DB Team shall deliver a Proposed Supplemental Agreement under this Article 13.3.3 to GDOT within 30 days (or longer time period if acceptable to GDOT) after delivery of the notice of Compensation and/or Relief Event in a form acceptable to GDOT. GDOT may require design and construction costs to be covered by separate Supplemental Agreements. If the DB Team requests a time extension, then GDOT, in its sole discretion, may require the DB Team to provide two alternative Proposed Supplemental Agreements, one of which shall provide for a time extension and any additional costs permitted thereunder, and the other of which shall show all acceleration costs associated with meeting an original Completion Deadline, as well as any additional costs permitted hereunder. If it is not feasible to recover to the original Completion Deadline or if the DB Team believes that the costs associated with such a recovery are prohibitive, then the DB Team shall recommend a date to be shown in the alternative Supplemental Agreement form.

13.3.3.2 DB Team shall prepare a scope of work, cost estimate, Time Impact Analysis, if any, and other information as required by the DB Documents for each Proposed Supplemental Agreement. All Proposed Supplemental Agreements shall satisfy the requirements of Article 14 and shall be sufficient in detail to enable GDOT to ascertain the basis and the amount of each Proposed Supplemental Agreement. The Proposed Supplemental Agreement shall at a minimum include:

(a) A scope of work describing in detail satisfactory to the GDOT all activities associated with the asserted change event.

(b) A cost estimate that sets out the estimated costs in such a way and in sufficient detail that a fair evaluation can be made. It shall be in a form approved by GDOT and shall include as separate items: labor, materials, equipment, overhead (which includes all indirect costs) and profit, as and to the extent allowed under Article 14 and this Article13, If the work is to be performed by Subcontractors and if the work is sufficiently defined to obtain Subcontractor quotes, DB Team shall obtain quotes (with

breakdowns showing cost of labor, materials, equipment, overhead and profit) on the Subcontractor's stationery and shall include such quotes as back-up for the DB Team estimate.

(c) If the DB Team claims that a Relief Event has occurred affecting the Critical Path and a Completion Deadline, it shall provide or update a prior submitted Time Impact Analysis indicating all activities represented or affected by the asserted change in accordance with this Article 13 and Section 2.5 of the Technical Provisions. The impacted delay analysis shall only modify the Activities that have been impacted by the event that justifies the extension.

(d) The DB Team shall provide such other supporting documentation as may be required by the Department.

(e) All Proposed Supplemental Agreements shall include a narrative justification detailing all causes of the asserted change, making specific reference and cite to the applicable provisions of the Agreement and DB Documents that permit a Supplemental Agreement to be issued, and describing the data and documents that establish the necessity of such asserted change.

13.3.3.3 Each lump sum and force account Proposed Supplemental Agreement shall meet all applicable requirements of Article 14 and this Article 13. The Proposed Supplemental Agreement submitted by DB Team will address any and all costs and delays and meet all requirements of this Article 13.3.3. GDOT shall review the Proposed Supplemental Agreement, and after negotiation and upon agreement of the terms and verification that all applicable requirements of Article 14 and this Article 13 are met, the DB Team and GDOT shall execute a Supplemental Agreement.

13.3.3.4 DB Team Representation

Each Proposed Supplemental Agreement shall contain a sworn certification in form acceptable to GDOT by the DB Team (and Subcontractor(s), for any Subcontractor involved in the Work or event contemplated by the Supplemental Agreement) that the Proposed Supplemental Agreement is made is good faith and in accordance with the terms of the DB Documents, the amount of time and/or compensation requested accurately reflects the appropriate adjustments and includes all known and anticipated impacts or amounts whatsoever that may be incurred as a result of the event or matter giving rise to such proposed change and that the DB Team (and Subcontractor(s), as applicable) has no reason to believe and does not believe that the factual basis for the Supplemental Agreement is falsely represented.

13.4 Final Relief Event and Compensation Event Determinations

Any final Relief Event Determination and/or final Compensation Event Determination that has been mutually accepted by GDOT and DB Team shall be set forth in a Supplemental Agreement in accordance with Article 13.3. Such Supplemental Agreement shall provide for

modification of the Contract Time and the Project Schedule, including to the extent so established by such Relief Event Determination, the Milestone Deadlines, and modification of the Contract Sum pursuant to any such Compensation Event Determination, as the case may be. All Supplemental Agreements shall be all-inclusive, comprehensive, and complete, and shall not include any conditions with respect to pricing or schedule or any other matters. The DB Team is not entitled to any additional costs or time whether deriving from or related to a Supplemental Agreement.

13.5 Reserved

Article 14 RELIEF EVENTS; COMPENSATION EVENTS

14.1 Relief Events

14.1.1 A Relief Event is one or more of the following events, subject to any limitations, claims, submission requirements, and other conditions set forth in the Agreement, provided that no relief will be available to the extent that (i) the events are within DB Team's control or are due to any wrongful act, wrongful omission, negligence, recklessness, willful misconduct, breach of contract or Law or violation of a Governmental Approval of any of the DB Team-Related Entities; or (ii) the events (or the effects of such events) could have been avoided by the exercise of reasonable caution, due diligence, or other reasonable efforts by Design-Build Team:

(a) Force Majeure Event;

(b) Latent defects in Existing Improvements;

(c) Change in Law;

(d) Discriminatory Action;

(e) GDOT's failure to perform or observe any of the covenants or obligations of GDOT under the Agreement or other DB Documents;

(f) GDOT Change;

(g) GDOT-Caused Delay;

(h) Performance of work in the Construction Maintenance Limits or Operations and Maintenance Limits, by Separate Contractors within the ROW, carried out by or on behalf of GDOT or a Governmental Entity, excluding any Utility Adjustment Work by a Utility Owner, that directly disrupts DB Team's onsite Work, and delays the Critical Path of the Work;

(i) Discovery at, near or on the Existing Right of Way or Property of (a) any Pre-existing Hazardous Materials or Hazardous Materials not otherwise constituting a DB Team Release of Hazardous Materials, provided that where such condition was identified in the existing Phase 1 Hazardous Materials Investigation in the RIDs, in

which case DB Team shall account for same in the Project Schedule and impacts shall be limited to such conditions not identified therein (whether in type or quantity), or (b) any archeological, paleontological or cultural resources not known or which could not have reasonably been known to the DB Team prior to the Proposal Due Date;

(j) Discovery at, near or on the Existing Right of Way or Property of any Threatened or Endangered Species (regardless of whether the species is listed as threatened or endangered as of the Proposal Due Date), excluding any such presence of species known to DB Team prior to the Proposal Due Date or that would become known to DB Team by undertaking reasonable investigation prior to the Proposal Due Date;

(k) Any spill of Hazardous Material by a third party who is not acting in the capacity of a DB Team-Related Entity which (i) occurs after the Proposal Due Date, (ii) is required to be reported to a Governmental Entity and (iii) renders use of the roadway or construction area unsafe or potentially unsafe absent assessment, containment and/or remediation;

(l) Issuance of a temporary restraining order or other form of injunction by a court that prohibits prosecution of any material portion of the Work, unless the injunction is the result of an action or inaction by the Design-Build Team;

(m) Suspension, termination or interruption of an approval of Environmental Documents, except to the extent that such suspension, termination or interruption results from failure by any DB Team-Related Entity to locate or design the Project or carry out the work in accordance with the approval of Environmental Documents or other Governmental Approval (which failure may include (i) modification by or on behalf of Design-Build Team of the design concept included in the Environmental Documents approval, (ii) means or methods used by any Design-Build Team-Related Entity for carrying out the Work, or (iii) decision or action by or on behalf of Design-Build Team to use or acquire Additional Property);

(n) Any change in the design concept of the Project or any portion thereof resulting from judicial or administrative action taken with respect to a legal challenge to any approval of Environmental Documents as compared to the design concept indicated in the alternative that was the subject of the approval of Environmental Documents, except to the extent the change in design concept had already been incorporated into Design-Build Team's design schematics assumed in connection with the Contract Sum;

(o) Subject to clause (s) of this Article 14.1.1, failure to obtain, or unreasonable and unjustified delay in obtaining or otherwise

maintaining once issued, a Governmental Approval from any Governmental Entity, except to the extent that such failure or delay results from failure by any Design-Build Team-Related Entity to locate or design the Project or carry out the work in accordance with the approval of Environmental Documents or other Governmental Approval (which failure may include (i) modification by or on behalf of Design-Build Team of the design concept included in the approval of Environmental Documents, (ii) means or methods used by any Design-Build Team-Related Entity for carrying out the Work, or (iii) decision or action by or on behalf of Design-Build Team to use or acquire Additional Property);

(p) GDOT's (i) lack of good and sufficient title to any parcel in the Existing Right of Way or the Property, to the extent it interferes with or adversely affects performance of Work, (ii) inability or failure to obtain an interest (including by easement or other right of access) to real property not identified in the Proposed Right of Way and required for construction of the Project as demonstrated by Design-Build Team, exclusive of any Additional Properties, Project Specific Locations, or parcels that are solely for the convenience of Design-Build Team, to the extent it interferes with or adversely affects performance of Work, or (iii) the existence at any time following issuance of NTP 3 of any title reservation, condition, easement or encumbrance on any parcel in the Existing Right of Way or Property owned by GDOT, of record or not of record, to the extent it interferes with or adversely affects performance of Work, except any title reservations, conditions, easements or encumbrances concerning Utilities or otherwise caused, permitted or suffered by a Design-Build Team-Related Entity;

(q) Unreasonable and unjustified delay by a Utility Owner with whom Design-Build Team has been unable to enter into a Utility Agreement in connection with a Utility Adjustment, or failure or delay of any Utility in obtaining any required easement, right of way, or other property interest as may be required, provided that all of the "conditions to assistance" described in Article 7.5.4 of the Agreement have been satisfied;

(r) Failure to obtain, or unreasonable and unjustified delay in obtaining, an approval from GDOT with respect to a Permitted Design Exception, except to the extent that such failure or delay in obtaining the GDOT approval results from failure by any Design-Build Team-Related Entity to carry out the Work in accordance with the DB Documents;

(s) Failure to obtain, or unreasonable and unjustified delay in obtaining, a Governmental Approval required for a re-evaluation of an approval of Environmental Documents due to an approved ATC; provided that Design-Build Team shall only be entitled to

relief for such failure or delay after expiration of the applicable GDOT Re-evaluation Period; or

(t) Material delays as a result of any modification to the approval of Environmental Documents, as a result of the Environmental Documents, and all approved supplements and re-evaluations pertaining to the Project as of the Effective Date provided that any such modifications are not the result of an ATC, Additional Properties, or attributable to Design-Build Team's design.

14.1.2 Extensions of Time for Relief Events

14.1.2.1 If DB Team complies with the notice and information requirements in this Article 14.1, then within 60 days after receiving the Proposed Supplemental Agreement (and, if applicable, any required updates thereto) GDOT, acting reasonably, and with consideration given recommendations made by GDOT, shall issue a Relief Event Determination. GDOT shall specify in the Relief Event Determination (a) the relevant obligations for which relief is given, (b) the period of time that Milestone Deadlines or periods set forth in the Project Schedule will be extended based on the number of days of delay affecting a Critical Path, after consumption of Float available pursuant to Article 3.2.5, that is directly attributable to the Relief Event and that cannot be avoided through reasonable mitigation measures and (c) if applicable, the period of time, if any, that the Contract Time will be extended. DB Team shall be relieved from the performance of obligations to the extent specified in the Relief Event Determination.

14.1.2.2 DB Team shall not be excused from compliance with applicable Laws, Technical Provisions or Technical Documents due to the occurrence of a Relief Event, except temporary inability to comply as a direct result of a Relief Event.

14.1.2.3 If GDOT is obligated to but does not provide a Relief Event Determination within such 30-day period or if DB Team disagrees with the length of the extension of the Contract Time or other relief set forth in the Relief Event Determination, DB Team shall have the right to assert a claim against GDOT for the relevant Relief Event and have such claim determined according to the Dispute Resolution Procedures. Any Dispute regarding the occurrence of a Relief Event, the terms of the Relief Event Determination or waiver of DB Team's right to relief shall be resolved according to the Dispute Resolution Procedures.

14.1.2.4 Without limiting DB Team's rights with respect to monetary relief for Compensation Events as set forth in this Agreement, the extensions of time as provided, if any, pursuant to this Article 14.1 are DB Team's sole remedy for a Relief Event.

14.1.3 Limitations on Time Extensions

14.1.3.1 The DB Team shall be required to demonstrate to GDOT's satisfaction that the change in the Work or other event or situation which is being asserted as a Relief Event will result in or has caused an identifiable and

measurable delay of the Work which will impact or has impacted the Critical Path affecting a Completion Deadline.

14.1.3.2 Any extension of a Completion Deadline allowed hereunder shall exclude any delay to the extent that it did not impact the Critical Path affecting a Completion Deadline or was a concurrent delay with any other delay for which the DB Team is not entitled to an extension.

14.2 Compensation Events

14.2.1 A Compensation Event is any of the following events, subject to any limitations, claims submission requirements, and other conditions set forth in the Agreement, provided that no relief will be available to the extent that (i) the events are within Design-Build Team's control, or are due to any wrongful act, wrongful omission, negligence, recklessness, willful misconduct, breach of contract or Law or violation of a Governmental Approval of any of the Design-Build Team-Related Entities; (ii) the events (or the effects of such events) could have been avoided by the exercise of reasonable caution, due diligence, or other reasonable efforts by Design-Build Team:

(a) Change in Law;

(b) Discriminatory Action;

(c) Material breach by GDOT of its material obligations under the Agreement or other DB Documents, including unreasonable failure to issue a certificate of Substantial Completion or a certificate of satisfaction of conditions precedent to Final Acceptance after Design-Build Team satisfies all applicable conditions and requirements for obtaining such certificates;

(d) GDOT-Caused Delay, other than with respect to GDOT's failure to provide response to Design-Build Team Submittals as provided under clause (d) of the definition of a GDOT-Caused Delay;

(e) GDOT Change;

(f) A GDOT Release of Hazardous Material or remediation of Pre-Existing Hazardous Materials, but excluding the extent of any Design-Build Team Release of Hazardous Materials;

(g) Issuance by a court in a legal proceeding challenging any approval of Environmental Documents or a temporary restraining order or other form of temporary injunction that prohibits prosecution of any material portion of the Work, unless the injunction is the result of an action or inaction by the Design-Build Team;

(h) Any change in the design concept of the Project or any portion thereof resulting from judicial or administrative action taken with respect to a legal challenge to any approval of Environmental Documents as compared to the design concept indicated in the alternative that was the subject of the approval of Environmental

Documents, except to the extent the change in design concept had already been incorporated into Design-Build Team's design schematics as approved pursuant to this Agreement;

(i) Subject to clause (n) of this Article 14.2, failure to obtain, or unreasonable and unjustified delay in obtaining or otherwise maintaining once issued, a Governmental Approval from any Governmental Entity, except to the extent that such failure or delay results from failure by any Design-Build Team-Related Entity to locate or design the Project or carry out the work in accordance with the approval of Environmental Documents or other Governmental Approval (which failure may include (i) modification by or on behalf of Design-Build Team of the design concept included in the approval of Environmental Documents, (ii) means or methods used by any Design-Build Team-Related Entity for carrying out the Work, or (iii) decision or action by or on behalf of Design-Build Team to use or acquire Additional Property);

(j) GDOT's (i) lack of good and sufficient title to any parcel in the Existing Right of Way or the State Proposed/State Acquired Right of Way or Property owned by GDOT, to the extent it interferes with or adversely affects performance of Work, (ii) inability or failure to obtain an interest (including by easement or other right of access) to real property not identified in the State Proposed/State Acquired Right of Way and required for construction of the Project as demonstrated by Design-Build Team, exclusive of any Additional Properties, Project Specific Locations, or parcels that are solely for the convenience of Design-Build Team, to the extent it interferes with or adversely affects performance of Work, or (iii) the existence at any time following issuance of NTP 3 of any title reservation, condition, easement or encumbrance on any parcel in the Existing Right of Way or Property owned by GDOT, of record or not of record, to the extent it interferes with or adversely affects performance of Work, except any title reservations, conditions, easements or encumbrances (A) concerning Utilities or (B) caused, permitted or suffered by a Design-Build Team-Related Entity;

(k) Failure to obtain, or unreasonable and unjustified delay in obtaining, an approval from GDOT with respect to a Permitted Design Exception, except to the extent that such failure or delay in obtaining the GDOT approval results from failure by any Design-Build Team-Related Entity to carry out the Work in accordance with the DB Documents;

(l) Failure to obtain, or unreasonable and unjustified delay in obtaining, a Governmental Approval required for a re-evaluation of an approval of Environmental Documents due to an approved ATC; provided that Design-Build Team shall only be entitled to compensation for such failure or delay after expiration of the applicable GDOT Re-evaluation Period;

(m) Performance of work in the Construction Maintenance Limits or Operations and Maintenance Limits, by Separate Contractors within the ROW, carried out by or on behalf of GDOT or a Governmental Entity, excluding any Utility Adjustment Work by a Utility Owner, that directly disrupts DB Team's onsite Work; or

(n) Material delays as a result of any modification to the approval of Environmental Documents, as a result of the Environmental Documents, and all approved supplements and re-evaluations pertaining to the Project as of the Effective Date provided that any such modifications are not the result of an ATC, Additional Properties, or attributable to Design-Build Team's design.

14.2.2 Determining Compensable Amounts

The Compensation Amount, if any, for design or construction shall be determined by applying the following provisions.

14.2.2.1 Cost impacts shall:

(a) Exclude (i) third-party entertainment costs, lobbying and political activity costs, costs of alcoholic beverages, costs for first class travel in excess of prevailing economy travel costs, and costs of club memberships, in each case to the extent that such costs would not be reimbursed to an employee of GDOT in the regular course of business, and (ii) unallowable costs under the following provisions of the federal Contract Cost Principles, 48 CFR 31.205: 31.205-8 (contributions or donations), 31.205-13 (employee morale, health, welfare, food service, and dormitory costs and credits), 31.205-14 (entertainment costs), 31.205-15 (fines, penalties, and mischarging costs), 31.205-27 (organization costs), 31.205-34 (recruitment costs), 31.205-35 (relocation costs), 31.205-43 (trade, business, technical and professional activity costs), 31.205-44 (training and education costs), and 31.205-47 (costs related to legal and other proceedings);

(b) Exclude amounts paid or to be paid to Affiliates in excess of the pricing DB Team could reasonably obtain in an arms' length, competitive transaction with an unaffiliated Contractor;

(c) Exclude those costs incurred in asserting, pursuing, or enforcing any Compensation Event, Relief Event or Dispute;

(d) Be reduced by any savings in costs resulting from the Compensation Event;

(e) Be subject to DB Team's obligation to mitigate cost increases and augment cost decreases in accordance with this Article 14.2.

(f) Exclude costs caused by the breach of contract or fault or negligence, or act or failure to act of any DB Team-Related Entity.

(g) Exclude costs, which could reasonably, and in accordance with Good Industry Practice, have been avoided by the DB Team, including by resequencing, reallocating, or redeploying its forces to other portions of the Work (including any additional costs reasonably incurred in connection with such reallocation or redeployment) or to other activities unrelated to the Work.

(h) Exclude costs for any rejected Work that failed to meet the requirements of the DB Documents and any necessary remedial Work.

(i) Exclude damages or expenses barred under Section 105.13 of the latest edition of GDOT Standard Specifications: Construction of Transportation Systems.

14.2.2.2 In all cases the Compensation Amount shall be net of all insurance available to DB Team including deductibles, or deemed to be self-insured by DB Team under Article 16, with respect to cost or revenue impacts of the Compensation Event.

14.2.2.3 The Compensation Amount shall not include any amount on account of federal, State, or local income taxes. Further and notwithstanding anything to the contrary herein, the Compensation Amount shall not include, under any circumstances, costs incurred by DB Team or any Contractors on account of charges or expenses due to (a) the business organization existence or maintenance of its business of any DB Team-Related Entity or (b) labor or employment matters as a result of any Change in Law.

14.2.3 If the Compensation Event is under clause (g) of Article 14.2, then the Compensation Amount shall be limited to the incremental increase in costs of initial design and construction due to delay and disruption directly attributable to the court order.

14.2.4 DB Team shall share with GDOT all data, documents, and information pertaining to bids for any work that is the subject of a Compensation Amount, and all of the aforementioned shall be on an Open Book Basis.

14.2.5 Any Dispute between GDOT and the DB Team regarding occurrence of a Compensation Event, determination of the Compensation Amount or waiver of DB Team's right to compensation shall be resolved according to the Dispute Resolution Procedures. The dispute resolution body(ies) shall apply the provisions of this Article 14.2 in determining the Compensation Amount.

14.2.6 Following a determination of the Compensation Amount by mutual agreement or the Dispute Resolution Procedures, GDOT shall pay such Compensation Amount (a) through periodic payments of the Compensation Amount in accordance with the scheduling and payment provisions in Section 2 of the Technical Provisions, (b) in a lump sum, payable as determined by mutual agreement or through the Dispute Resolution Procedures, or (c) in such other manner as agreed upon by the Parties. GDOT, in its sole discretion, shall be entitled to select one or any combination of the foregoing methods of compensation.

14.2.7 Without limiting DB Team's rights with respect to non-monetary relief for Relief Events as set forth in this Agreement, the Compensation Amount shall represent the sole right to compensation and damages for the adverse financial effects of a Compensation Event. As a condition precedent to GDOT's obligation to pay any portion of the Compensation Amount, DB Team shall execute a full, unconditional, irrevocable release, in form reasonably acceptable to GDOT, of any claims, Losses or other rights to compensation or other monetary relief associated with such Compensation Event, except for the right to the subject Compensation Amount, DB Team's right to non-monetary relief for a Relief Event, and the right to terminate this Agreement in accordance with Article 19.4 and to receive any applicable Termination Compensation.

14.2.8 Limitations on Acceleration Costs

Acceleration costs shall be compensable hereunder only with respect to Supplemental Agreements issued by GDOT.

Acceleration costs are those fully documented increased costs reasonably incurred by the DB Team (i.e., costs over and above what the DB Team would otherwise have incurred) which are directly attributable to increasing the performance level of the Work in an attempt to complete necessary activities of the Work earlier than otherwise anticipated, such as for additional equipment, additional crews, overtime and shift premiums, increased supervision, and any unexpected movement of materials, equipment, or crews necessary for resequencing in connection with acceleration efforts. Acceleration costs do not include any costs for disruption damages as described below in Article 14.2.9.

14.2.9 No Disruption Damages

Disruption damages, whether from a single event or continual, multiple or repetitive events, are not allowed or recoverable under the Agreement. Disruption damages include costs of (i) rearranging the DB Team's Work plan not associated with an extension of a Completion Deadline, and (ii) loss of efficiency, momentum or productivity.

14.2.10 Limitations on Delay Damages

14.2.10.1 Delay damages are compensable and are limited to the provisions of GDOT Standard Specifications 105.13.B.

14.2.10.2 Before the DB Team may obtain any increase in the Contract Sum to compensate for any delay damages or acceleration costs, the DB Team shall have demonstrated to GDOT's satisfaction that:

(a) The Project Schedule in fact sets forth a reasonable method for completion of the Work;

(b) The change in the Work or other event or situation that is the subject of the requested Supplemental Agreement has caused or will result in an identifiable and measurable delay of the Work and impact the Critical Path affecting milestones listed in Exhibit 9;

(c) The delay damage was not due to any breach of contract or fault or negligence, or act or failure to act of any DB Team-Related Entity, and could not reasonably have been avoided by the DB Team, including by resequencing, reallocating or redeploying its forces to other portions of the Work (subject to reimbursement for additional costs reasonably incurred in connection with such reallocation or redeployment) or other activities unrelated to the Work;

(d) The delay for which compensation is sought is not concurrent with any other delay for which the DB Team is not entitled to delay damages; and

(e) The DB Team has suffered or will suffer actual costs due to such delay, each of which costs shall be justified and documented in a manner satisfactory to GDOT.

14.2.10.3 Delay damages shall only be available for delays to the Completion Deadline for Substantial Completion. For delays to any other Completion Deadline the only relief available is suspension of Liquidated Damages for the duration of the proven delay.

14.3 Lump Sum Compensation

The preferred approach by both parties is that Supplemental Agreements will be paid on a lump sum basis, if the parties can agree on a lump sum amount. Lump sum prices shall be based on the original allocations of the Contract Sum to comparable activities. If reference to price allocations is inappropriate, or when requested by GDOT or the DB Team, negotiation for lump sum Supplemental Agreements shall be on an Open Book Basis and may be based on the pricing contained in the escrowed bid documents as well as Subcontractors' bid prices.

If the parties cannot agree on a lump sum amount for Supplemental Agreements, the Supplemental Agreements will be paid as Force Account Supplemental Agreements described in Article 14.4.

14.4 Force Account Compensation

14.4.1 GDOT may at its discretion issue a Directive Letter or Force Account Supplemental Agreement whenever the Parties cannot agree to a lump sum Supplemental Agreement or GDOT determines that a Force Account Supplemental Agreement is advisable.

14.4.2 The Force Account shall instruct the DB Team to perform the Work, indicating expressly the intention to treat the items as changes in the Work, and setting forth the kind, character, and limits of the Work as far as they can be ascertained, the terms under which changes to the Contract Sum will be determined, and the estimated total change in the Contract Sum anticipated thereunder.

14.4.3 Force Account work is subject to the provisions of 109.05.B of the latest edition of GDOT Standard Specifications: Construction of Transportation Systems. No other direct or indirect compensation will be allowed, including for other miscellaneous costs for which no specific allowance is provided.

14.4.4 Upon final determination of the allowable costs, GDOT shall issue a modified Supplemental Agreement setting forth the final adjustment to the Contract Sum.

14.4.5 Force Account Records

14.4.5.1 Unless and until a lump sum Supplemental Agreement is issued, or in the case that a Directive Letter or Supplemental Agreement is issued directing work be performed under Force Account provisions, the DB Team shall maintain its records in such a manner as to provide a clear distinction between: (i) the direct cost of Work for which it is entitled (or for which it believes it is entitled) to an increase in the Contract Sum; and (ii) the costs of all other operations.

14.4.5.2 The DB Team shall contemporaneously collect, record in writing, segregate, and preserve: (a) all data necessary to determine the costs described in this Article 14.4 with respect to all Work which is the subject of a requested Supplemental Agreement, specifically including costs associated with Design Work (for which a negotiated Supplemental Agreement has not been issued); and (b) all data necessary to show the actual impact (if any) of any change on the Critical Path affecting a Completion Deadline with respect to all Work which is the subject of a Supplemental Agreement or a Proposed Supplemental Agreement, if the impact on the Critical Path affecting a Completion Deadline is in dispute.

14.4.5.3 Such data shall be provided on forms approved by GDOT. The cost of furnishing such reports is included in the DB Team's predetermined overhead and profit.

14.4.5.4 The DB Team shall furnish daily, on forms approved by GDOT, reports of all Force Account Work. The cost of furnishing such reports shall be included in the DB Team's overhead and profit percentages. The reports shall include:

(a) Name, classification, date, daily hours, total hours, rate, and extension for each laborer, equipment operator, and supervisor, excluding superintendents.

(b) Designation, dates, daily hours, total hours, rental rate, and extension for each unit of machinery and equipment.

(c) Quantities of materials, prices and extensions.

(d) Transportation costs of materials, machinery, and equipment.

(e) Invoices for materials used and for transportation charges.

(f) Cost of property damage, liability, and worker's compensation insurance premiums, unemployment insurance contributions, and Social Security tax.

The reports shall also state the total costs to date for the Force Account Work.

14.4.5.5 Labor costs for Project management and administration, and construction field management above but not including the Superintendent, according to the DB Team's organization and standard work practices, are included in the markup as provided in Standard Specification 109.05.B.1.

14.4.5.6 The cost of labor for non-construction-related Work, whether provided by the DB Team or a Subcontractor, will equal the sum of the following: (i) actual wages (i.e. the base wage paid to the employee exclusive of any fringe benefits); plus (ii) an overhead based on the audited Federal Acquisition Regulations (FAR) field rates. The DB Team will also be paid for profit on non-construction labor of five percent of labor costs plus overhead.

14.4.5.7 If materials used on the Force Account Supplemental Agreement Work are not specifically purchased for the Work but are taken from the DB Team's stock, the DB Team shall furnish an affidavit certifying that such materials were taken from the DB Team's stock, that the quantity claimed was actually used, and that the price and transportation costs claimed represent actual costs to the DB Team.

14.4.5.8 All Force Account Supplemental Agreement reports shall be signed by the Project Manager. GDOT will compare its records with the DB Team's reports, make the necessary adjustments, and compile the costs of Force Account Supplemental Agreement Work. When such reports are agreed upon and signed by both parties, they will become the basis of payment and may be billed in the next Payment Request, but shall not preclude subsequent adjustment based on a later audit.

Article 15 REPRESENTATIONS AND COVENANTS

15.1 DB Team Representations and Covenants

DB Team hereby represents to and covenants with GDOT as follows:

15.1.1 During all periods necessary for the performance of the Work, DB Team and its Contractor(s) will maintain all required authority, license status, professional ability, skills and capacity to perform the Work.

15.1.2 As of the Effective Date, DB Team has evaluated the constraints affecting design and construction of the Project, including the Property, the Existing Right of Way and Required Right of Way limits as well as the conditions of the Environmental Documents, and has reasonable grounds for believing and does believe that the Project can be designed and built within such constraints.

15.1.3 Except as to parcels that GDOT lacked title or access to prior to the Effective Date, DB Team, in accordance with Good Industry Practice and the requirements of the DB Documents, shall have examined the Site and surrounding locations, performed appropriate field studies and geotechnical investigations of the Site, investigated and reviewed available public and private records, and undertook other activities sufficient to familiarize itself with surface conditions and subsurface conditions, including the presence of Utilities, Hazardous Materials, contaminated groundwater, archeological, paleontological and cultural resources, and Threatened or Endangered

Species, affecting the Site or surrounding locations; and as a result of such review, inspection, examination and other activities DB Team is familiar with and accepts the physical requirements of the Work, subject to GDOT's obligations regarding Hazardous Materials under Article 7.8 and Exhibit 11 and DB Team's rights to seek relief under Article 14 .

15.1.4 DB Team has familiarized itself with the requirements of any and all applicable Laws, including with limitation O.C.G.A. §48-13-30, et. seq., and the conditions of any required Governmental Approvals prior to entering into this Agreement. Except as specifically permitted under Article 13 or Article 14, DB Team shall be responsible for complying with the foregoing at its sole cost and without any additional compensation or time extension on account of such compliance, regardless of whether such compliance would require additional time for performance or additional labor, equipment and/or materials not expressly provided for in the DB Documents. As of the Effective Date, DB Team has no reason to believe that any Governmental Approval required to be obtained by DB Team will not be granted in due course and thereafter remain in effect so as to enable the Work to proceed in accordance with the DB Documents.

15.1.5 All Work furnished by DB Team will be performed by or under the supervision of Persons who hold all necessary, valid licenses to practice in the State, by personnel who are skilled, experienced and competent in their respective trades or professions, who are professionally qualified to perform the Work in accordance with the DB Documents and who shall assume professional responsibility for the accuracy and completeness of the Design Documents, Construction Documents and other documents prepared or checked by them.

15.1.6 As of the Effective Date, DB Team is a [corporation] duly organized and validly existing under the laws of [Insert name of state], has the requisite power and all required licenses to carry on its present and proposed activities, and has full power, right and authority to execute and deliver the DB Documents, Principal Project Documents as and to the extent applicable, and to perform each and all of the obligations of DB Team provided for herein and therein. DB Team is duly qualified to do business, and is in good standing, in the State as of the Effective Date, and will remain duly qualified and in good standing throughout the term of this Agreement and for as long thereafter as any obligations remain outstanding under the DB Documents.

15.1.7 The execution, delivery and performance of the DB Documents, and all other Principal Project Documents to which DB Team is (or will be) a party have been (or will be) duly authorized by all necessary corporate action of DB Team; each Person executing the DB Documents and all other such Project related documents, on behalf of DB Team has been (or at the time of execution will be) duly authorized to execute and deliver each such document on behalf of DB Team; and the DB Documents, and all such other Project related documents have been (or will be) duly executed and delivered by DB Team.

15.1.8 Neither the execution and delivery by DB Team of the DB Documents and the Principal Project Documents to which DB Team is (or will be) a party, nor the consummation of the transactions contemplated hereby or thereby, is (or at the time of execution will be) in conflict with or has resulted or will result in a default under or a violation of the governing instruments of DB Team.

15.1.9 As of the Effective Date, each of the DB Documents, the Principal Project Documents to which DB Team is (or will be) a party constitutes (or at the time of execution and delivery will constitute) the legal, valid and binding obligation of DB Team, enforceable against DB Team and, if applicable, each member of DB Team, in accordance with its terms, subject only to applicable bankruptcy, insolvency and similar laws affecting the enforceability of the rights of creditors generally and the general principles of equity.

15.1.10 As of the Effective Date, there is no action, suit, proceeding, investigation or litigation pending and served on DB Team which challenges DB Team's authority to execute, deliver or perform, or the validity or enforceability of, the DB Documents, and all other Project related documents to which DB Team is a party, or which challenges the authority of DB Team official executing the DB Documents, or the Principal Project Documents. DB Team has disclosed to GDOT prior to the Effective Date any pending and un-served or threatened action, suit, proceeding, investigation or litigation with respect to such matters of which DB Team is aware.

15.1.11 As of the Proposal Due Date, DB Team disclosed to GDOT in writing all organizational conflicts of interest of DB Team and its Contractors of which DB Team was actually aware; and between the Proposal Due Date and the Effective Date, DB Team has not obtained knowledge of any additional organizational conflict of interest, and there have been no organizational changes to DB Team or its Contractors identified in its Proposal, which have not been accepted in writing by GDOT. For this purpose, organizational conflict of interest has the meaning set forth in Section 1.6 of the RFP (Instructions to Proposers).

15.1.12 To the extent the Design-Build Contractor is not the DB Team, DB Team represents and warrants, as of the effective date of the Design-Build Contract, as follows: (a) the Design-Build Contractor is duly organized, validly existing and in good standing under the laws of the state of its organization; (b) with respect to Persons that individually hold more than ten percent (10%) of the capital stock of the Design-Build Contractor (including options, warrants and other rights to acquire capital stock), such stock is owned by the Persons whom DB Team has set forth in a written certification delivered to GDOT prior to the Effective Date; (c) the Design-Build Contractor has the power and authority to do all acts and things and execute and deliver all other documents as are required to be done, observed or performed by it in connection with its engagement by DB Team; (d) the Design-Build Contractor has all necessary expertise, qualifications, experience, competence, skills and know-how to perform the design and construction of the Project in accordance with the DB Documents; and (e) the Design-Build Contractor is not in breach of any applicable Law that would have a material adverse effect on the design and construction of the Project.

15.1.13 The execution and delivery by DB Team of this Agreement and all other Project related documents to which DB Team is a party will not result, at the time of execution, in a default under any other agreement or instrument to which it is a party or by which it is bound.

15.1.14 The execution and delivery by DB Team of the DB Documents and performance by DB Team of its obligations thereunder will not conflict with any Laws applicable to DB Team that are valid and in effect on the Effective Date.

15.1.15 The Design-Build Contractor shall comply in full with the provisions of Code Sections 50-24-1 through 50-24-6 of the Official Code of Georgia Annotated, relating to the "Drug-free Workplace Act".

15.1.16 No event which, with the passage of time or the giving of notice, would constitute a DB Team Default has occurred and has not yet been cured.

15.1.17 Reserved

15.1.18 DB Team certifies, by entering into this Agreement, that neither it nor its principals are presently debarred, suspended, proposed for debarment, declared ineligible, or voluntarily excluded from entering into this Agreement by any federal agency or by any department, agency or political subdivision of the State, including GDOT. For purposes of this Article 15.1.18, the term "principal" means an officer, director, owner, partner, Key Personnel, employee, or other person with primary management or supervisory responsibilities, or a person who has a critical influence on or substantive control over the operations of DB Team.

15.1.19 DB Team represents, warrants and certifies by entering into this Agreement, that neither it nor its Affiliates is presently in arrears in payment of Taxes, permit fees or other statutory, regulatory or judicially required payments to GDOT or the State.

15.1.20 DB Team acknowledges and agrees, that as a requirement to enter into the DB Documents, the Proposal documents delivered pursuant to the RFP constitute all the information used in the preparation of the Proposal, and that no other Proposal preparation information will be considered in the resolution of Disputes. The DB Team also agrees that nothing in the Proposal documents delivered pursuant to the RFP shall change or modify the terms or conditions of the DB Documents.

15.2 GDOT Representations and Covenants

GDOT hereby represents to and covenants with DB Team as follows:

15.2.1 As of the Effective Date, GDOT has full power, right and authority to execute, deliver and perform the DB Documents and the Principal Project Documents to which GDOT is a party and to perform each and all of the obligations of GDOT provided for herein and therein.

15.2.2 As of the Effective Date, each of the DB Documents and the Principal Project Documents to which GDOT is (or will be) a party constitutes (or at the time of execution and delivery will constitute) the legal, valid and binding obligation of GDOT, enforceable against GDOT in accordance with its terms, subject only to applicable bankruptcy, insolvency and similar laws affecting the enforceability of the rights of creditors generally and the general principles of equity.

15.2.3 The execution and delivery by GDOT of this Agreement and the Principal Project Documents to which GDOT is a party will not result, at the time of execution, in a default under any other agreement or instrument to which it is a party or by which it is bound.

15.2.4 The execution and delivery by GDOT of the DB Documents and performance by GDOT of its obligations thereunder will not conflict with any Laws applicable to GDOT that are valid and in effect on the Effective Date.

15.2.5 Reserved

15.2.6 As of the Effective Date, there is no action, suit, proceeding, investigation or litigation pending and properly served on GDOT, or, to GDOT's knowledge, without obligation to investigate, threatened, which challenges GDOT's authority to execute, deliver or perform, or the validity or enforceability of, the DB Documents, and all other Project related documents to which GDOT is a party.

15.3 Survival of Representations and Covenants

The representations and covenants of DB Team and GDOT contained herein shall survive expiration or earlier termination of this Agreement.

15.4 Special Remedies for Mutual Breach of Representations and Covenants

Notwithstanding any other provision of this Agreement, if there exists or occurs any circumstance or event that constitutes or results in a concurrent breach of any of the representations or covenants set forth in this Article 15 by both DB Team and GDOT but does not also constitute or result in any other breach or default by either Party, then such breaches shall not form the basis for a Compensation Event by the DB Team or damage claim by GDOT against DB Team. Instead, the only remedies shall be for the Parties to take action to rectify or mitigate the effects of such circumstance or event, to pursue severance and reformation of the DB Documents and Principal Project Documents as set forth in Article 24.13, or Termination by Court Ruling as set forth in Article 19.11 and Exhibit 20.

Article 16 INSURANCE; PERFORMANCE SECURITY; INDEMNITY

16.1 Insurance Policies and Coverage

16.1.1 Insurance Certificates and Additional Insured Endorsements Requirements

16.1.1.1 Certificates of Insurance. The DB Team shall procure the insurance coverages identified below at the DB Team's expense and shall furnish GDOT an insurance certificate listing GDOT as the certificate holder, and as an additional insured where required. Certificates of insurance shall be on a form approved for use in the State of Georgia by the Commissioner of Insurance that provides the following:

(a) Name and address of authorized insurance agent

(b) Name and address of insured

(c) Name of insurance company(ies)

(d) Description of policies

(e) Policy number(s)

(f) Policy Period(s)

(g) Limits of liability

(h) Name and address of GDOT as certificate holder

(i) Project Name and Number

(j) Signature of authorized insurance agent

(k) Telephone number and email address of authorized insurance agent

(l) Mandatory 30-Day notice of cancellation or non-renewal (except 10 Days for non-payment).

16.1.2 Insurer Qualifications, Insurance Requirements. Each of the insurance coverages required below (i) shall be issued by a company licensed or authorized by the Insurance Commissioner to transact the business of insurance in the State of Georgia for the applicable line of insurance, and (ii) shall be an insurer (or, for qualified self-insureds or group self-insureds that hold a certificate of self-insurance with the appropriate agencies within the State of Georgia, a specific excess insurer providing statutory limits) with a Best Policyholders Rating of "A-" or better and with a financial size rating of Class V or larger. Each such policy shall contain the following provisions:

16.1.2.1 The insurance company agrees that the policy shall not be canceled, reduced, or allowed to expire until 30 days, except 10 days for non-payment of premium, after GDOT has received written notice thereof, as evidenced by return receipt of certified mail or statutory mail, or until such time as other insurance coverage providing protection equal to protection called for in this Contract shall have been received, accepted and acknowledged by GDOT. Such notice shall be valid only as to the Project as shall have been designated by Project Number and Name in said notice.

16.1.2.2 The policy shall not be subject to invalidation as to any insured by reason of any act or omission of another insured or any of its officers, employees, agents or other representatives ("Separation of Insureds"), except Professional Liability (Errors and Omissions).

16.1.2.3 Each Insurer is hereby notified that the statutory requirement that the Attorney General shall represent and defend the Indemnified Parties remains in full force and effect and is not waived by issuance of any policy of insurance. In the event of litigation, any settlement on behalf of the Indemnified Parties must be expressly approved by the Attorney General. The DB Team and its insurance carrier may retain, but are not obligated to retain, counsel to assist with the defense of the Indemnified Parties, in which case there will be mutual cooperation between the Attorney General and such counsel. See O.C.G.A. §45-15-12.

16.1.2.4 All deductibles shall be paid for by the DB Team.

16.1.2.5 The maximum deductible, except for Worker's Compensation qualified self-insurers or group self-insurers, in any policy shall not exceed $250,000.00 per claim, provided, however, that the maximum deductible requirement shall not apply to self-insurers or group self-insurers that hold a certificate of self-insurance with the appropriate agencies within the State of Georgia.

16.1.3 Required Insurance Coverages. The DB Team also agrees to purchase insurance and have the authorized agent state on the insurance certificate that the DB Team has purchased the following types of insurance coverages, consistent with the policies and requirements of O.C.G.A. §50-21-37. The minimum required coverages and liability limits are as follows:

16.1.3.1 Workers' Compensation Insurance. The DB Team agrees to provide at a minimum Workers' Compensation coverage in accordance with the statutory limits as established by the General Assembly of the State of Georgia. A group insurer must submit a certificate of authority from the Insurance Commissioner approving the group insurance plan. A self-insurer must submit a certificate from the Georgia Board of Workers' Compensation stating the DB Team qualifies to pay its own workers' compensation claims. The DB Team shall require all Subcontractors performing work under this Agreement to obtain an insurance certificate showing proof of Workers' Compensation Coverage and shall submit a certificate on the letterhead of the DB Team in the following language:

This is to certify that all subcontractors performing work on this Project are covered by their own workers' compensation insurance or are covered by the DB Team's workers' compensation insurance. DB Team further certifies that additional subcontractors performing work on the Project will be covered by their own workers' compensation insurance or will be covered by the DB Team's workers' compensation insurance.

16.1.3.2 Employers' Liability Insurance. The DB Team shall also maintain Employer's Liability Insurance Coverage with limits of at least:

(a) Bodily Injury by Accident - $1,000,000 each accident; and

(b) Bodily Injury by Disease - $1,000,000 each employee.

The DB Team shall require all Subcontractors performing work under this Contract to obtain an insurance certificate showing proof of Employers Liability Insurance Coverage and shall submit a certificate on the letterhead of the DB Team in the following language:

This is to certify that all subcontractors performing work on this Project are covered by their own Employers Liability Insurance Coverage or are covered by the DB Team's Employers Liability Insurance Coverage. DB Team further certifies that additional subcontractors performing work on this Project will be covered by their own Employers Liability Insurance

Coverage or will be covered by the DB Team's Employers Liability Insurance Coverage.

16.1.3.3 Commercial General Liability (CGL) Insurance. The DB Team shall provide Commercial General Liability Insurance (2004 ISO Occurrence Form or equivalent) that shall include, but need not be limited to, coverage for bodily injury and property damage arising from premises and operations liability, products and completed operations liability, blasting and explosion, collapse of structures, underground damage, personal injury liability and contractual liability. The CGL policy must include separate aggregate limits per Project and shall provide at a minimum the following limits:

Coverage	**Limit**
1. Premises and Operations	$ 1,000,000.00 per Occurrence
2. Products and Completed Operations	$ 1,000,000.00 per Occurrence
3. Personal Injury	$ 1,000,000.00 per Occurrence
4. Contractual	$ 1,000,000.00 per Occurrence
5. General Aggregate	$ 2,000,000.00 per Project

16.1.3.4 Commercial Business Automobile Liability Insurance. The DB Team shall provide Commercial Business Automobile Liability Insurance that shall include coverage for bodily injury and property damage arising from the operation of any owned, non-owned, or hired automobile. The Commercial Business Automobile Liability Insurance Policy shall provide not less than $1,000,000 Combined Single Limits for each occurrence.

16.1.3.5 Commercial Umbrella Liability Insurance. The DB Team shall provide a Commercial Umbrella Liability Insurance to provide excess coverage above the Commercial General Liability and Commercial Business Automobile Liability to satisfy the minimum limits set forth herein. The umbrella coverage shall follow form with the Umbrella limits required as follows:

Contract Amount	**Per Occurrence**	**Aggregate**
Less Than $5,000,000	$ 2,000,000	$ 4,000,000
Equal to or Greater than $5,000,000 and Less than $30,000,000	$ 2,000,000	$ 10,000,000
Greater than $30,000,000	$ 4,000,000	$ 20,000,000

16.1.3.6 Additional Requirements for Commercial Policies in Articles 16.1.3.3 through 16.1.3.5

(a) The DB Team shall cause its insurer to issue an Additional Insured Endorsement naming the officers, members, and employees of GDOT as additional Insureds.

(b) Each policy must be written on an "occurrence" basis.

16.1.3.7 Professional Liability (Errors and Omissions) Insurance. Limits shall not be less than the following:

(a) Reserved

(b) Professional Liability (Errors and Omissions): Insurance in an amount not less than one million dollars ($1,000,000.00) per claim and annual aggregate must be maintained or caused to be maintained during the agreement term with a retroactive date no later than the date that design services commenced, and must be maintained for a period of at least five years following Substantial Completion. Such policy or policies shall cover all the DB Team's professional liabilities, whether occasioned by the DB Team, its employees, subconsultants, subcontractors or other agents arising out of design and engineering services performed under or in accordance with this Agreement.

16.1.3.8 Reserved.

16.1.3.9 Disposition of Insurance Documents. Original certificate(s) of insurance with all required endorsements must be provided to GDOT evidencing the minimum insurance required. Renewal certificates for all required insurance must be provided to GDOT 30 days prior to the expiration/renewal date. If requested, copies of required insurance policies must be provided to GDOT within 10 Business Days of such request.

16.1.4 Termination of Obligation to Insure. Unless otherwise expressly provided to the contrary, the obligation to insure as provided herein shall not terminate until GDOT shall have executed the certificate of Final Acceptance.

16.1.5 Failure of Insurers. The DB Team is responsible for any delay resulting from the failure of its insurance carriers to furnish proof of proper coverage in the prescribed form.

16.1.6 Inadequacy of Required Coverages. GDOT makes no representation that the scope of coverage and limits of liability specified for any Insurance Policy to be carried pursuant to this Agreement or approved variances therefrom are adequate to protect the DB Team or its Contractors against its undertakings under this Agreement to GDOT, or its liabilities to any third party. It is the responsibility of the DB Team and each Contractor to determine if any changes or additional coverages are required to adequately protect their interests. No such limits of liability or approved variances therefrom shall preclude GDOT from taking any actions as are available to it under the DB Documents, or otherwise at Law.

16.2 Performance and Payment Security

DB Team shall furnish Performance & Payment Bonds ("P&P Bonds") meeting the requirements of this Article 16.2 as performance and payment security for the Work.

16.2.1 P&P Bonds

16.2.1.1 The DB Team shall furnish, or cause the furnishing of, P&P Bonds. DB Team shall obtain and deliver P&P Bonds in such amount as required pursuant to the terms set forth in the Standard Specification Section 103.05, identifying DB Team as the P&P Obligor, securing DB Team's obligations to

perform the Work and to ensure that payments owing to Claimants are made with respect to such Work.

16.2.1.2 The P&P Bonds shall be issued by a properly licensed and U.S. Treasury listed surety(ies) that have not less than "A" or better and Class VIII by A.M. Best and Company's Insurance Reports Key Rating Guide, and listed on Treasury Department Circular 570, and be on the list of companies approved by the State for at least three of the last five years from the date of the proposed bond issuance. If P&P Bonds are issued by more than one surety, such P&P Bonds shall be executed on a joint and several basis.

16.3 Prosecution of Claims

16.3.1 Unless otherwise directed by GDOT in writing with respect to GDOT's insurance claims and subject to the requirements of Articles 16.5 and 16.6 below, DB Team shall be responsible for reporting and processing all potential claims by GDOT or DB Team against the Insurance Policies required hereunder. DB Team agrees to report timely to the insurer(s) under such Insurance Policies any and all matters which may give rise to an insurance claim by DB Team or GDOT or another Indemnified Party and to promptly and diligently pursue such insurance claims in accordance with the claims procedures specified in such Insurance Policies, whether for defense or indemnity or both. DB Team shall enforce all legal rights against the insurer under the applicable Insurance Policies and applicable Laws in order to collect thereon, including pursuing necessary litigation and enforcement of judgments, provided that DB Team shall be deemed to have satisfied this obligation if a judgment is not collectible through the exercise of lawful and diligent means.

16.3.2 GDOT agrees to promptly notify DB Team of GDOT's incidents, potential claims against GDOT, and matters which may give rise to an insurance claim against GDOT, to tender to the insurer GDOT's defense of the claim under such Insurance Policies, and to cooperate with DB Team as necessary for DB Team to fulfill its duties hereunder.

16.3.3 If in any instance DB Team has not performed its obligations respecting insurance coverage set forth in the DB Documents or is unable to enforce and collect any such insurance for failure to assert claims in accordance with the terms of the Insurance Policies or to prosecute claims diligently, then for purposes of determining DB Team's liability and the limits thereon or determining reductions in compensation due from GDOT to DB Team on account of available insurance, DB Team shall be treated as if it has elected to self-insure up to the full amount of insurance coverage which would have been available had DB Team performed such obligations and not committed such failure. Nothing in this Article 16.3.3 or elsewhere in this Article 16.3 shall be construed to treat DB Team as electing to self-insure where DB Team is unable to collect due to the bankruptcy or insolvency of any insurer which at the time the Insurance Policy is written meets the rating qualifications set forth in this Article 16.3.

16.3.4 DB Team shall not settle or accept any settlement of any insurance claim which is in excess of $100,000 or which involves any claim that has been asserted against GDOT, the State, or any agency or department thereof, without prior written approval of GDOT, provided that DB Team shall not be required to obtain GDOT approval for workers compensation claims.

16.3.5 If in any instance DB Team has not promptly performed its obligation to report to applicable insurers and process any potential insurance claim tendered by GDOT or another Indemnified Party, then GDOT or the other Indemnified Party may, but is not obligated to, (a) notify DB Team in writing of GDOT's intent to report the claim directly with the insurer and thereafter process the claim, and (b) proceed with reporting and processing the claim if GDOT or the other Indemnified Party does not receive from DB Team, within 10 days after so notifying DB Team, written proof that DB Team has reported the claim directly to the insurer. GDOT or the other Indemnified Party may dispense with such notice to DB Team if GDOT or the other Indemnified Party has a good faith belief that more rapid reporting is needed to preserve the claim.

16.4 Reserved

16.5 Indemnity by DB Team

16.5.1 Subject to Article 16.5.2, DB Team shall release, protect, defend, indemnify and hold harmless the Indemnified Parties from and against any and all Third-Party Claims and Third-Party Losses arising out of, relating to or resulting from:

16.5.1.1 The breach or alleged breach of the DB Documents by DB Team;

16.5.1.2 The failure or alleged failure by any DB Team-Related Entity to comply with the Governmental Approvals, any applicable Environmental Laws or other Laws (including Laws regarding Hazardous Materials Management);

16.5.1.3 Any alleged patent or copyright infringement or other allegedly improper appropriation or use by any DB Team-Related Entity of trade secrets, patents, proprietary information, know-how, copyright rights or inventions in performance of the Work, or arising out of any use in connection with the Project of methods, processes, designs, information, or other items furnished or communicated to GDOT or another Indemnified Party pursuant to the DB Documents; provided that this indemnity shall not apply to any infringement resulting from GDOT's failure to comply with specific written instructions regarding use provided to GDOT by DB Team;

16.5.1.4 The actual or alleged culpable act or omission, culpable error or misconduct of any DB Team-Related Entity in or associated with performance of the Work;

16.5.1.5 Any and all claims by any governmental or taxing authority claiming taxes based on gross receipts, purchases or sales, the use of any property or income of any DB Team-Related Entity with respect to any payment for the Work made to or earned by any DB Team-Related Entity;

16.5.1.6 Any and all stop notices, liens and claims filed in connection with the Work, including all expenses and attorneys', accountants' and expert witness fees and costs incurred in discharging any stop notice, lien or claim, and any other liability to Contractors, laborers and Suppliers for failure to pay sums due for their work, services, materials, goods, equipment or supplies, including

interest and attorney's fees, provided that GDOT is not in default in payments owing (if any) to DB Team with respect to such Work;

16.5.1.7 Any actual or threatened DB Team Release of Hazardous Materials;

16.5.1.8 The claim or assertion by any other developer or contractor that any DB Team-Related Entity interfered with or hindered the progress or completion of work being performed by the other contractor or developer, or failed to cooperate reasonably with the other developer or contractor, so as to cause inconvenience, disruption, delay or loss, except where the DB Team-Related Entity was not in any manner engaged in the management, prosecution, protection or performance of the Work;

16.5.1.9 Any dispute or claim by a Utility Owner related to any DB Team-Related Entity's performance of, or failure to perform, the obligations under any Standard Utility Agreement;

16.5.1.10 (a) Any DB Team breach of or failure to perform an obligation that GDOT owes to a third Person, including, but not limited to, Governmental Entities, under Law or under any agreement between GDOT and a third Person, where GDOT has delegated performance of the obligation to DB Team pursuant to the terms of the DB Documents, or (b) the negligent or willful acts or omissions of any DB Team-Related Entities which render GDOT unable to perform or abide by an obligation that GDOT owes to a third Person, including, but not limited to, Governmental Entities, under any agreement between GDOT and a third Person, where the agreement is previously disclosed or known to DB Team;

16.5.1.11 The fraud, bad faith, arbitrary or capricious acts, willful misconduct, negligence or violation of Law or contract by DB Team or Design-Build Contractor or any Affiliate of either in connection with DB Team's performance of real property acquisition services under the DB Documents;

16.5.1.12 Inverse condemnation, trespass, nuisance, interference with use and enjoyment of property or similar taking of or harm to real property by reason of (a) the failure of any DB Team-Related Entity to comply with Good Industry Practice, requirements of the DB Documents, Management Plans or Governmental Approvals, (b) the intentional misconduct or negligence of any DB Team-Related Entity, or (c) the entry onto or encroachment upon another's property by any DB Team-Related Entity;

16.5.1.13 If applicable, any violation of any federal or state securities or similar law by any DB Team-Related Entity;

16.5.1.14 Errors, inconsistencies or other defects in the design or construction of the Project and/or of Utility Adjustments, or the Work, included in the Design Work and/or Construction Work; or

16.5.1.15 Any claim asserted or alleged against GDOT in contradiction of Article 4.8.1.

16.5.2 Subject to the releases and disclaimers herein, including all the provisions set forth in Article 4.4, DB Team's indemnity obligation shall not extend to any Third-Party Claims and Third-Party Losses to the extent caused or contributed to by:

16.5.2.1 The sole negligence, recklessness or willful misconduct, bad faith or fraud of the Indemnified Party;

16.5.2.2 GDOT's breach of any of obligations under the DB Documents; or

16.5.2.3 An Indemnified Party's violation of any Laws or Governmental Approvals;

16.5.2.4 Any material defect inherent in a prescriptive design, or construction specification included in the DB Documents that was not drafted or provided by DB Team under this Agreement, but only where prior to occurrence of the Third-Party Loss DB Team complied with such specification and did not actually know, or would not reasonably have known, while exercising reasonable diligence, that it was deficient or, if DB Team actually knew of the deficiency, unsuccessfully sought GDOT's waiver or acceptance of a Change Request from such specification; or

16.5.2.5 Any Compensation Event or Relief Event.

16.5.3 In claims by an employee of DB Team, a Contractor, anyone directly or indirectly employed by them or anyone for whose acts they may be liable, the indemnification obligation under this Article 16.5 shall not be limited by a limitation on the amount or type of damages, compensation or benefits payable by or for DB Team or a Contractor under workers' compensation, disability benefit or other employee benefits laws.

16.5.4 For purposes of this Article 16.5, "Third-Party Claim" includes a claim, dispute, disagreement, cause of action, demand, suit, action, judgment, investigation, or legal or administrative proceeding which (a) is asserted, initiated or brought by any Indemnified Party's employee, agent or contractor against an Indemnified Party, (b) is within the scope of the indemnities and (c) is not covered by the Indemnified Party's worker's compensation program. For purposes of this Article 16.5, "Third-Party Loss" includes any actual or alleged Loss sustained or incurred by such employee, agent or contractor.

16.6 Defense and Indemnification Procedures

16.6.1 If any of the Indemnified Parties receives notice of a claim that it believes is within the scope of the indemnities under Article 16.5, GDOT shall by writing as soon as practicable after receipt of the claim, (a) inform DB Team of the claim, (b) send to DB Team a copy of all written materials GDOT has received asserting such claim and (c) notify DB Team that should no insurer accept defense of the claim, the Indemnified Party will conduct its own defense unless DB Team accepts the tender of the claim in accordance with Article 16.6.3. As soon as practicable after DB Team receives notice of a claim or otherwise has actual knowledge of a claim, it shall tender the claim in writing to the insurers under all potentially applicable Insurance Policies and

comply with all notice requirements contained in such Insurance Policies. GDOT and other Indemnified Parties also shall have the right to tender such claims to such insurers.

16.6.2 Subject to Article 16.6.4, if the insurer under any applicable Insurance Policy accepts the tender of defense, GDOT and DB Team shall cooperate in the defense as required by the Insurance Policy. If no insurer under potentially applicable Insurance Policies provides defense, then Article 16.6.3 shall apply.

16.6.3 If the defense is tendered to DB Team, then within 30 days after receipt of the tender it shall notify the Indemnified Party whether it has tendered the matter to an insurer and (if not tendered to an insurer or if the insurer has rejected the tender) shall deliver a written notice stating that DB Team:

16.6.3.1 Accepts the tender of defense and confirms that the claim is subject to full indemnification hereunder without any "reservation of rights" to deny or disclaim full indemnification thereafter;

16.6.3.2 Accepts the tender of defense but with a "reservation of rights" in whole or in part, with a detailed statement as to the reasons for the "reservation of rights"; or

16.6.3.3 Rejects the tender of defense based on a determination that it is not required to indemnify against the claim under the terms of this Agreement, with a detailed statement as to the reasons for the denial.

16.6.4 If DB Team accepts the tender of defense under Article 16.6.3.1, DB Team acknowledges and agrees (and has caused the insurer to be so notified of the statutory requirements) that the Attorney General shall represent and defend the State, GDOT, and any officer, director, commissioner or employee of such Indemnified Parties; but GDOT will request that the Attorney General, without limiting the authority of the Attorney General, consider attorneys recommended by DB Team for appointment as Special Assistant Attorney General to represent and defend the referenced Indemnified Parties. DB Team may, at the option of the Attorney General, have the right to participate in the defense of the Indemnified Parties. In the event of litigation, any settlement on behalf of the Indemnified Parties must be expressly approved by the Attorney General. The foregoing shall not relieve DB Team's obligation to bear the fees and costs of defending and settling such claim. During such defense:

16.6.4.1 DB Team shall fully and regularly inform the Indemnified Party and the Attorney General of the progress of the defense and of any settlement discussions; and

16.6.4.2 Each Indemnified Party shall fully cooperate in said defense, provide to DB Team all materials and access to personnel it requests as necessary for defense, preparation and trial and which or who are under the control of or reasonably available to the Indemnified Party, and maintain the confidentiality of all communications between it and DB Team concerning such defense.

16.6.5 If DB Team responds to the tender of defense as specified in Article 16.6.3.2 or Article 16.6.3.3, such Indemnified Parties shall also be represented by

the Attorney General who shall otherwise control the defense of such claim, including settlement. The foregoing shall not relieve DB Team from its obligations to bear the fees and costs of defending and settling such claim.

16.6.6 Even if the Attorney General has appointed counsel selected by DB Team to represent any of the Indemnified Parties, the Attorney General may assume the defense of the applicable Indemnified Parties by delivering to DB Team written notice of such election and the reasons therefor, if the Indemnified Parties, at the time it gives notice of the claim or at any time thereafter, reasonably determines that:

16.6.6.1 A conflict exists between it and DB Team which prevents or potentially prevents DB Team from presenting a full and effective defense;

16.6.6.2 DB Team is otherwise not providing an effective defense in connection with the claim; or

16.6.6.3 DB Team lacks the financial capacity to satisfy potential liability or to provide an effective defense.

16.6.7 If any of the Indemnified Parties is entitled and elects to conduct its own defense pursuant hereto of a claim for which it is entitled to indemnification, DB Team shall reimburse on a current basis all reasonable costs and expenses any such Indemnified Parties incurs in investigating and defending, including, but not limited to, attorney's fees. In the event the Indemnified Parties are entitled to and elect to conduct their own defense, then:

16.6.7.1 In the case of a defense conducted under Article 16.6.3.1, it shall have the right to settle or compromise the claim with DB Team's prior written consent, which shall not be unreasonably withheld or delayed;

16.6.7.2 In the case of a defense conducted under Article 16.6.3.2, it shall have the right to settle or compromise the claim with DB Team's prior written consent, which shall not be unreasonably withheld or delayed, or with approval of the court following reasonable notice to DB Team and opportunity to be heard and without prejudice to the Indemnified Party's rights to be indemnified by DB Team; and

16.6.7.3 In the case of a defense conducted under Article 16.6.3.3, it shall have the right to settle or compromise the claim without DB Team's prior written consent and without prejudice to its rights to be indemnified by DB Team.

16.6.8 A refusal of, or failure to accept, a tender of defense, as well as any Dispute over whether an Indemnified Party which has assumed control of defense is entitled to do so under Article 16.6.6, shall be submitted in accordance with the Dispute Resolution Procedures. DB Team shall be entitled to contest an indemnification claim and pursue, through the Dispute Resolution Procedures, recovery of defense and indemnity payments it has made to or on behalf of the Indemnified Party.

16.6.9 In determining responsibilities and obligations for defending suits pursuant to this Article 16.6, specific consideration shall be given by the Parties to the following factors: (a) the party performing the activity in question; (b) the location of the

activity and Incident; (c) contractual arrangements then governing the performance of the activity; and (d) allegations of respective fault contained in the claim.

16.6.10 Notwithstanding anything to the contrary set forth in Article 16.5 or this Article 16.6, the Attorney General is the only counsel authorized to represent GDOT or any State affiliated agencies or departments. In the event that there is any potential conflict of interest that could reasonably arise in the representation of any Indemnified Party and DB Team in the defense of any action, suit or proceeding pursuant to Article 16.5 above or in the event that state or local law requires the use of specific counsel, (i) such Indemnified Party may elect in its sole and absolute discretion whether to waive such conflict of interest, and (ii) unless such Indemnified Party elects to waive such conflict of interest, or in any event if required by state or local law, then the counsel designated by the Indemnified Party shall solely represent such Indemnified Party and, if applicable, DB Team shall retain its own separate counsel, each at DB Team's sole cost and expense. The Attorney General will consider counsel recommended by DB Team for appointment as a Special Assistant Attorney General.

16.6.11 If a suit or proceeding based on a claimed infringement of a patent or copyright is brought against any of the Indemnified Parties, DB Team shall, at its own expense, defend or settle any such suit or proceeding if authorized to do so in writing by the Attorney General subject to the obligations of indemnification as set forth in Article 16.5.

16.6.12 DB Team, subject to this Article 16.6, may settle the claim without the consent or agreement of the Indemnified Parties, unless the settlement (i) would result in injunctive relief or other equitable remedies or otherwise require the Indemnified Parties to comply with restrictions or limitations that adversely affect or materially impair the reputation and standing of the Indemnified Parties, (ii) would require the Indemnified Parties to pay amounts that DB Team or its insurer does not fund in full, (iii) would not result in the Indemnified Parties full and complete release from all liability to the plaintiffs or Claimants who are parties to or otherwise bound by the settlement, or (iv) directly involves any such Indemnified Parties (in which case the Attorney General shall be the only counsel authorized to represent such parties with respect to any such settlement).

Article 17 DEFAULT; REMEDIES; CLAIM FOR ADJUSTMENTS AND DISPUTES

17.1 Default by DB Team; Cure Periods

17.1.1 DB Team Default

Subject to relief from its performance obligations pursuant to Article 14.1.2.1 and Article 13.3.2.4, DB Team shall be in breach under this Agreement upon the occurrence of any one or more of the following events or conditions (each a "DB Team Default"):

17.1.1.1 DB Team (a) fails to begin the applicable Work within 30 days following issuance of NTP 1; (b) fails to satisfy all conditions to issuance of NTP 3 under Article 3.3.1 by the NTP 3 Conditions Deadline; or (c) fails to satisfy all conditions to commencement of the applicable Construction Work, and fails to commence such Construction Work with diligence and continuity, as the same may be extended pursuant to this Agreement;

17.1.1.2 An Abandonment;

17.1.1.3 DB Team fails to achieve Substantial Completion by the Substantial Completion Deadline, as the same may be extended pursuant to this Agreement;

17.1.1.4 DB Team fails to achieve Final Acceptance by the Final Acceptance Deadline, or fails to achieve such required Elements of the Work by any applicable Milestone Deadline, as any such dates may be extended pursuant to this Agreement;

17.1.1.5 Any representation or covenant in the DB Documents made by DB Team, or any certificate, schedule, report, instrument or other document delivered by or on behalf of DB Team to GDOT pursuant to the DB Documents is materially false, materially misleading or materially inaccurate when made or omits material information when made;

17.1.1.6 DB Team fails to obtain, provide and maintain any insurance, bonds, or other performance security as and when required under this Agreement for the benefit of relevant parties, or fails to comply with any requirement of this Agreement pertaining to the amount, terms or coverage of the same;

17.1.1.7 DB Team makes or attempts to make or suffers a voluntary or involuntary assignment or transfer of all or any portion of this Agreement, the Project or DB Team's Interest, or there occurs a Change of Control, in violation of Article 21;

17.1.1.8 DB Team materially fails to timely observe or perform or cause to be observed or performed any other material covenant, agreement, obligation, term or condition required to be observed or performed by DB Team under the DB Documents (including material failure to perform the Design Work, Construction Work, or any material portion thereof in accordance with the DB Documents); provided that this Article 17.1.1.8 shall not apply to DB Team Defaults specifically addressed by other provisions of Article 17.1.1;

17.1.1.9 After exhaustion of all rights of appeal, there occurs any suspension or debarment (distinguished from ineligibility due to lack of financial qualifications), or there goes into effect an agreement for voluntary exclusion, from bidding, proposing or contracting with any federal or State department or agency of (a) DB Team, (b) any member of DB Team with a material financial obligation owing to DB Team for equity or shareholder loan contributions, (c) any Affiliate of DB Team for whom transfer of ownership would constitute a Change of Control, or (d) any Key Contractor whose work is not completed;

17.1.1.10 DB Team fails to (a) deliver to GDOT any remedial plan as may be required pursuant to Article 17.3.5 or (b) otherwise fails to fully comply with the schedule or specific elements of, or actions required under, any such accepted remedial plan;

17.1.1.11 DB Team (a) commences a voluntary case seeking liquidation, reorganization or other relief with respect to itself or its debts under any U.S. or foreign bankruptcy, insolvency or other similar Law now or hereafter in effect, (b) seeks the appointment of a trustee, receiver, liquidator, custodian or other similar official of it or any substantial part of its assets; (c) becomes insolvent, or generally does not pay its debts as they become due; (d) admits in writing its inability to pay its debts; (e) makes an assignment for the benefit of creditors; or (f) takes any action to authorize any of the foregoing; or

17.1.1.12 An involuntary case is commenced against DB Team (a) seeking liquidation, reorganization, dissolution, winding up, a composition or arrangement with creditors, a readjustment of debts or other relief with respect to DB Team or DB Team's debts under any U.S. or foreign bankruptcy, insolvency or other similar Law now or hereafter in effect; (b) seeking the appointment of a trustee, receiver, liquidator, custodian or other similar official of DB Team or any substantial part of DB Team's assets; (c) seeking the issuance of a writ of attachment, execution, or similar process; or (d) seeking like relief; and such involuntary case shall not be contested by DB Team in good faith or shall remain undismissed and unstayed for a period of 60 days.

17.1.2 Forbearance and Cure Periods

For the purpose of GDOT's exercise of other remedies, subject to Article 17.2.2 and subject to remedies that this Article 17 expressly states may be exercised before lapse of a cure period, DB Team shall have the following cure periods with respect to the following DB Team Defaults:

17.1.2.1 Respecting a DB Team Default under Article 17.1.1.10, a period of five days after GDOT delivers to DB Team written notice of the DB Team Default;

17.1.2.2 Respecting a DB Team Default under Article 17.1.1.6 or Article 17.1.1.7, a period of 15 days after GDOT delivers to DB Team written notice of the DB Team Default; provided that GDOT shall have the right, but not the obligation, to effect cure, at DB Team's expense, if a DB Team Default under Article 17.1.1.6 continues beyond five days after such notice is delivered;

17.1.2.3 Respecting a DB Team Default under Article 17.1.1.1 or Article 17.1.1.2, a period of 30 days after GDOT delivers to DB Team written notice of the DB Team Default; provided that as to a DB Team Default under Article 17.1.1.1, such cure period shall not preclude or delay GDOT's immediate exercise, without notice or demand, of its right, but not the obligation, to effect cure, at DB Team's expense;

17.1.2.4 Respecting a DB Team Default under Article 17.1.1.5, Article 17.1.1.8 or Article 17.1.1.9, a period of 30 days after GDOT delivers to DB Team written notice of the DB Team Default; provided that (a) if the DB Team Default is of such a nature that the cure cannot with diligence be completed within such time period and DB Team has commenced meaningful steps to cure immediately after receiving the default notice, DB Team shall have such additional period of time, up to a maximum cure period of 180 days, as is reasonably necessary to

diligently effect cure, (b) as to Article 17.1.1.5, cure will be regarded as complete when the adverse effects of the breach are cured, and (c) as to Article 17.1.1.9, if the debarred or suspended Person is a managing member, general partner or controlling investor of DB Team, cure will be regarded as complete when DB Team proves it has removed such Person from any position or ability to manage, direct or control the decisions of DB Team or to perform Work;

17.1.2.5 Respecting a DB Team Default under Article 17.1.1.11 or Article 17.1.1.12, no cure period, and there shall be no right to notice of a DB Team Default under Article 17.1.1.11 or Article 17.1.1.12; and

17.1.2.6 Respecting a DB Team Default arising from DB Team's failure to achieve any Milestone Deadline other than the Substantial Completion Deadline or Final Acceptance Deadline, a forbearance period of 30 days from the date of such DB Team Default shall apply, provided that DB Team shall, as a condition to such forbearance period, be required to (a) deliver to GDOT a remedial action plan within 10 days after written notice of such DB Team Default, pursuant to Article 17.3.5 (without further demand or notice by GDOT), and (b) with the delivery of such remedial action plan, acknowledge any associated Liquidated Damages that are accruing. Where such remedial action plan has been accepted by GDOT in writing, then such forbearance period as provided herein shall be extended or abbreviated as required by such remedial action plan, subject to DB Team's diligent prosecution of the Work in accordance therewith. Any such DB Team Default shall be deemed cured upon satisfaction of the conditions set forth in such accepted remedial action plan and any Liquidated Damages shall cease to accrue upon the date of such satisfaction. Notwithstanding anything to the contrary herein, Liquidated Damages accruing during such forbearance period, as may be extended, shall not be waived by this Article 17.1.2.6 and shall be payable pursuant to the terms of this Agreement.

17.1.3 Certain Curative Actions; Status Report

17.1.3.1 If the DB Team Default consists of failure to give GDOT a required prior notice and opportunity to complete an applicable review and comment or acceptance procedure under Article 6.3 before action is taken by DB Team, such DB Team Default shall be curable only by reversing or suspending the action until the notice and review and comment or acceptance procedures are followed and completed, unless DB Team finished the action before receiving the notice of DB Team Default or unless waived by GDOT.

17.1.3.2 If the DB Team Default consists of any DB Team activity or failure to act which constitutes a change from DB Team's activities immediately prior to the DB Team Default, such DB Team Default shall be curable only by reinstating the activity as it was being performed immediately prior to the DB Team Default.

17.1.3.3 For any DB Team Default for which a Warning Notice has been delivered by GDOT to DB Team, DB Team may request from GDOT a status report as to DB Team's progress in effecting a cure, by delivering to GDOT a written request accompanied by DB Team's own report as to its progress in effecting a cure. GDOT shall provide its response within 10 Business

Days after receipt of DB Team's written request and report. The response shall be provided solely for purposes of informing DB Team as to GDOT's view of the progress in effecting a cure for the DB Team Default, shall not constitute an admission of any fact, shall not be admissible in evidence for any purpose, shall not form the basis for any Dispute, and shall not limit in any way GDOT's right to terminate this Agreement in accordance with Article 19.3 should cure not be effected within the relevant period.

17.2 Warning Notices

17.2.1 Warning Notice Events

Without prejudice to any other right or remedy available to GDOT, GDOT may, but in no case shall be required to, deliver a written notice (a "Warning Notice") to DB Team, stating explicitly that it is a "Warning Notice" and stating in reasonable detail the matter or matters giving rise to the notice and, if applicable, amounts due from DB Team, and reminding DB Team of the implications of such notice, whenever there occurs any of the following:

17.2.1.1 Any DB Team Default under Article 17.1.1.1, 17.1.1.2, 17.1.1.7, 17.1.1.8, or 17.1.1.10;

17.2.1.2 Delay or failure to achieve any Milestone Deadline; or

17.2.1.3 Any other material DB Team Default.

17.2.2 Effect of Warning Notice on DB Team Cure Period

17.2.2.1 Any notice of a DB Team Default issued under Article 17.1 may, if it concerns a matter under Article 17.2.1, also be issued as a Warning Notice. In such case, the cure period available to DB Team, if any, shall be as set forth in Article 17.1.2.

17.2.2.2 If GDOT issues a Warning Notice under Article 17.2.1 for any DB Team Default after it issues a notice of such DB Team Default, then the cure period available to DB Team, if any, for such DB Team Default before GDOT may seek to appoint a receiver for DB Team, remove DB Team or terminate this Agreement on account of such DB Team Default shall be extended by the time period between the date the notice of such DB Team Default was issued and the date the Warning Notice is issued. No later issuance of a Warning Notice shall extend the time when GDOT may exercise any other remedy respecting such DB Team Default.

17.2.3 Other Effects of Warning Notice

17.2.3.1 The issuance of a Warning Notice shall entitle GDOT to increase the level of oversight as provided in Article 17.3.8.

17.2.3.2 The issuance of a Warning Notice may trigger a Default Termination Event as provided in Article 19.3.

17.3 Remedies for DB Team Default

17.3.1 Termination

In the event of any DB Team Default that is or becomes a Default Termination Event set forth in Article 19.3.1, GDOT may terminate this Agreement and GDOT thereupon may take control of the Work, which termination shall, among other things, automatically terminate all of DB Team's rights under Article 2, whereupon DB Team shall take all action required to be taken by DB Team under Article 19.5.

17.3.2 Remedies for Failure to Meet Safety Standards or Perform Safety Compliance

17.3.2.1 Subject to Article 17.3.2.4, if at any time DB Team fails to meet any Safety Standard or timely perform Safety Compliance or GDOT and DB Team cannot reach an agreement regarding the interpretation or application of a Safety Standard or the valid issuance of a Safety Compliance Order within a period of time acceptable to GDOT, acting reasonably, GDOT shall have the absolute right and entitlement to undertake or direct DB Team to undertake any work required to ensure implementation of and compliance with Safety Standards as interpreted or applied by GDOT or with the Safety Compliance Order.

17.3.2.2 To the extent that any work done pursuant to Article 17.3.2.1 is undertaken by GDOT and is reasonably necessary to comply with Safety Standards or perform validly issued Safety Compliance Orders, DB Team shall pay to GDOT on demand GDOT Recoverable Costs in connection with such work, and GDOT (whether it undertakes the work or has directed DB Team to undertake the work) shall have no obligation or liability to compensate DB Team for any Losses DB Team suffers or incurs as a result thereof.

17.3.2.3 To the extent that any work done pursuant to Article 17.3.2.1 is undertaken by GDOT and is not reasonably necessary to comply with Safety Standards or perform validly issued Safety Compliance Orders, GDOT shall compensate DB Team only for Losses DB Team suffers or incurs as a direct result thereof.

17.3.2.4 To the extent that any Safety Compliance Order work pursuant to Article 17.3.2.1 is undertaken by DB Team under written protest delivered prior to starting the work and it is finally determined that the Safety Compliance work was not necessary, the unnecessary work under the Safety Compliance Order shall be treated as a GDOT Change.

17.3.2.5 Notwithstanding anything to the contrary contained in the DB Documents, if in the good faith judgment of GDOT, DB Team has failed to meet any Safety Standards or perform Safety Compliance and the failure results in an Emergency or danger to persons or property, and if DB Team is not then diligently taking all necessary steps to rectify or deal with such Emergency or danger, GDOT may, without notice and without awaiting lapse of the period to cure any breach, and in addition and without prejudice to its other remedies, (but is not obligated to) (a) immediately take such action as may be reasonably necessary to rectify the Emergency or danger, in which event DB Team shall pay

to GDOT on demand the cost of such action, including GDOT Recoverable Costs, or (b) suspend Construction Work and/or close or cause to be closed any and all portions of the Project affected by the Emergency or danger. So long as GDOT undertakes such action in good faith, even if under a mistaken belief in the occurrence of such failure or existence of an Emergency or danger as a result thereof, such action shall not be deemed unlawful or a breach of this Agreement, shall not expose GDOT to any liability to DB Team and shall not entitle DB Team to any other remedy, it being acknowledged that GDOT has a high priority, paramount public interest in protecting public and worker safety at the Project and adjacent and connecting areas. GDOT's good faith determination of the existence of such a failure, Emergency or danger shall be deemed conclusive in the absence of clear and convincing evidence to the contrary. Immediately following rectification of such Emergency or danger, as determined by GDOT, acting reasonably, GDOT shall allow the Construction Work to continue or such portions of the Project to reopen, as the case may be. The foregoing shall not, however, protect GDOT from DB Team's lawful claims to indemnity or contribution for third-party bodily injury or property damage arising out of any such GDOT action, if and to the extent (i) GDOT was mistaken in believing such a DB Team Default occurred, (ii) the third-party liability is not insured and not required to be insured under the DB Documents, and (iii) such injury or property damage was caused by GDOT's negligence, recklessness or intentional misconduct.

17.3.3 Step-in Rights

Upon the occurrence of a DB Team Default and expiration, without full and complete cure, of the cure period, if any, available to DB Team, without necessity for a Warning Notice, and without waiving or releasing DB Team from any obligations, GDOT shall have the right, but not the obligation, for so long as such DB Team Default remains uncured by GDOT or DB Team, to pay and perform all or any portion of DB Team's obligations and the Work that are the subject of such DB Team Defaults, as well as any other then-existing breaches or failures to perform for which DB Team received prior written notice from GDOT but has not commenced diligent efforts to cure provided, that (i) except with respect to DB Team's lawful claims for third-party bodily injury or property damage arising out of such GDOT action, GDOT will not incur any liability to DB Team for any act or omission of GDOT or any other Person in the course of remedying or attempting to remedy any DB Team Default and (ii) GDOT's cure of any DB Team Default will not waive or affect GDOT's rights against DB Team by reason of the DB Team Default.

17.3.3.1 In connection with such action, GDOT may, to the extent and only to the extent reasonably required for or incident to curing the DB Team Default or such other breaches or failures to perform for which DB Team received prior written notice from GDOT but has not commenced and continued diligent efforts to cure:

(a) Employ security guards and other safeguards to protect the Project;

(b) Spend such sums as are reasonably necessary to employ and pay such architects, engineers, consultants and contractors and obtain materials and equipment as may be required, without obligation or

liability to DB Team or any Contractors for loss of opportunity to perform the same Work or supply the same materials and equipment;

(c) Draw on and use proceeds from payment and performance bonds and other performance security to the extent available under the terms thereof to pay such sums;

(d) Execute all applications, certificates and other documents as may be required;

(e) Make decisions respecting, assume control over and continue Work as may be reasonably required;

(f) Meet with, coordinate with, direct and instruct contractors and suppliers, process invoices and applications for payment from contractors and suppliers, pay contractors and suppliers, and resolve claims of contractors, subcontractors and suppliers, and for this purpose DB Team irrevocably appoints GDOT as its attorney-in-fact with full power and authority to act for and bind DB Team in its place and stead;

(g) Take any and all other actions as may be reasonably required or incident to curing; and

(h) Prosecute and defend any action or proceeding incident to the Work undertaken.

17.3.3.2 DB Team shall reimburse GDOT on demand, GDOT Recoverable Costs in connection with the performance of any act or Work authorized by this Article 17.3.3.

17.3.3.3 GDOT and any of their Authorized Representatives, contractors, subcontractors, vendors and employees shall not be liable to DB Team in any manner for any inconvenience or disturbance arising out of its entry onto the Project or Project Specific Locations in order to perform under this Article 17.3.3, unless caused by the gross negligence, recklessness, willful misconduct or bad faith of such Person. If any Person exercises any right to pay or perform under this Article 17.3.3, it nevertheless shall have no liability to DB Team for the sufficiency or adequacy of any such payment or performance, or for the manner or quality of design, or construction unless caused by the gross negligence, recklessness, willful misconduct or bad faith of such Person.

17.3.3.4 The rights under this Article 17.3.3 are subject to the right of any Surety under payment and performance bonds to assume performance and completion of all bonded work.

17.3.3.5 In the event GDOT takes action described in this Article 17.3.3 and it is later finally determined that GDOT lacked the right to do so because there did not occur a DB Team Default and expiration, without full and complete

cure, of the cure period, if any, available to DB Team, then GDOT's action shall be treated as a Directive Letter for a GDOT Change.

17.3.4 Damages; Offset

17.3.4.1 Subject to Article 17.3.10 and Article 17.3.11 and the provisions on Liquidated Damages set forth in Article 17.4, GDOT shall be entitled to recover any and all damages available at Law (subject to the duty at Law to mitigate damages and without duplicate recovery) on account of the occurrence of a DB Team Default, including, to the extent available at Law, (a) loss of any compensation due GDOT under the DB Documents proximately caused by the DB Team Default, (b) actual and projected costs to remedy any defective part of the Work, (c) actual and projected costs to rectify any breach or failure to perform by DB Team and/or to bring the condition of the Project to the standard it would have been in if DB Team had complied with its obligations to carry out and complete the Work in accordance with the DB Documents, (d) actual and projected costs to GDOT to terminate, take over the Project, re-procure and replace DB Team, and (e) actual and projected increases in costs to GDOT to complete the Project if not completed, together with interest thereon at the Default Interest Rate commencing from the date any amount becomes due to GDOT until paid. DB Team shall owe any such damages that accrue after the occurrence of the DB Team Default and the delivery of notice thereof, if any, required by this Agreement regardless of whether the DB Team Default is subsequently cured.

17.3.4.2 GDOT may deduct and offset any claim amount owing to it, provided such claim amount has been liquidated through Dispute Resolution Procedures or otherwise, from and against any amounts GDOT may owe to DB Team or any Affiliate pursuant to this Agreement; provided that GDOT shall first draw on all amounts held in respect of the claim in the GDOT Claims Account.

17.3.4.3 If the claim amount is not liquidated, GDOT may elect to exercise its right to direct a payment from DB Team up to the disputed portion of the claim which payment shall be deposited into the GDOT Claims Account. Upon liquidation, the disputed portion of the claim shall be satisfied first from the amounts held in the GDOT Claims Account, and then through GDOT's right of offset with respect to the liquidated claim amounts.

17.3.5 Remedial Action Plan Delivery and Implementation

17.3.5.1 Upon the occurrence of a DB Team Default, GDOT shall have the right, but is not obligated, to demand that DB Team shall, within 10 days after written notice of such DB Team Default, be required to prepare and submit a remedial action plan for GDOT approval.

17.3.5.2 The remedial action plan shall set forth a schedule and specific actions to be taken by DB Team to improve its performance and cure the DB Team Default. Such actions may include improvements to DB Team's quality management practices, plans and procedures, revising and restating components of the Management Plans, changes in organizational and management structure, increased monitoring and inspections, changes in Key

Personnel and other important personnel, replacement of Contractors, corrective measures necessary to expedite the progress of construction and to demonstrate ability to achieve any Milestone Deadline including, without limitation, (i) working additional shifts or overtime and/or (ii) supplying additional manpower, equipment and facilities, and delivery of security to GDOT.

17.3.5.3 DB Team's failure to diligently prosecute the Work in accordance with any such approved remedial action plan shall be deemed a further DB Team Default.

17.3.6 Performance Security

17.3.6.1 Upon the occurrence of a DB Team Default and expiration, without full and complete cure, of the applicable cure period, if any, under Article 17.1.2, without necessity for a Warning Notice, and without waiving or releasing DB Team from any obligations, and subject to Article 16 as applicable, GDOT shall be entitled to make demand upon and enforce any bond, and make demand upon, draw on and enforce and collect any guaranty or other payment or performance security available to GDOT under this Agreement with respect to the DB Team Default in question in any order in GDOT's sole discretion. Where access to a bond or other payment or performance security is to satisfy damages owing, GDOT shall be entitled to make demand, draw, enforce and collect regardless of whether the DB Team Default is cured subsequent to such draw. GDOT will apply the proceeds of any such action to the satisfaction of DB Team's obligations under the DB Documents, including payment of amounts due GDOT. The foregoing does not limit or affect any other right of GDOT to make demand upon and enforce any bond, and make demand upon, draw on and enforce and collect any guaranty or other payment or performance security, immediately after GDOT are entitled to do so under the bond, guaranty or other payment or performance security.

17.3.7 Suspension of Work

17.3.7.1 Upon GDOT's delivery of notice of DB Team Default for any of the following breaches or failures to perform and DB Team's failure to fully cure and correct, within the applicable cure period, if any, available to DB Team under Article 17.1.2, GDOT shall have the right and authority to suspend any affected portion of the Work by written order to DB Team:

(a) Performance of Nonconforming Work;

(b) Failure to comply with any Law or Governmental Approval (including failure to handle, preserve and protect archeological, paleontological or historic resources, or failure to handle Hazardous Materials, in accordance with applicable Laws and Governmental Approvals);

(c) Certain failures to remove and replace personnel as set forth in Article 10.6.3;

(d) Failure to provide proof of required insurance coverage as set forth in Article 16.1.1.1;

(e) Failure to carry out and comply with Directive Letters;

(f) Failure to satisfy any condition to commencement of construction set forth in Article 7.6; and

(g) Failure to maintain, extend or replace performance and payment security required under the Agreement, including any P&P Bonds, unless a drawing has been made under same in the amount of the required coverage provided for in Article 16.2 and the proceeds of such drawing are held by GDOT.

GDOT will lift the suspension order promptly after DB Team fully cures and corrects the applicable breach or failure to perform.

17.3.7.2 In addition, GDOT shall have the right and authority to suspend any affected portion of the Work by written notice to DB Team for the following reasons:

(a) To comply with any court order or judgment (although it may qualify as a Compensation Event under Article 14.2.1(g) or a Relief Event under Article 14.1.1(l));

(b) GDOT's performance of data recovery respecting archeological, paleontological or cultural resources (although it may qualify as a Relief Event under Article 14.1.1(i));

(c) The existence of conditions unsafe for workers, other Project personnel or the general public, including certain failures to comply with Safety Standards or perform Safety Compliance as set forth in Article 17.3.2.5; or

(d) DB Team has failed to (i) pay in full when due sums owing any Contractor for services, materials or equipment, except only for amounts in dispute, or (ii) deliver any certificate, release, certified payroll or affidavit of wages paid required with any Payment Request or required under this Agreement.

17.3.7.3 DB Team shall promptly comply with any such written suspension order, even if DB Team disputes the grounds for suspension. DB Team shall promptly recommence the Work upon receipt of written notice from GDOT directing DB Team to resume Work.

17.3.7.4 In addition to the protections from liability under Article 17.3.2.5, neither GDOT shall not have any liability to DB Team, and DB Team shall have no right to a Relief Event or Compensation Event, in connection with any suspension properly founded on any of the other grounds set forth in this Article 17.3.7 (except potential Relief Events or Compensation Events in the case of suspensions under Articles 17.3.7.2(a) and 17.3.7.2(b)). If GDOT orders

suspension of Work on one of the foregoing grounds but it is finally determined under the process set forth under Dispute Resolution Procedures that such grounds did not exist, or if GDOT orders suspension of Work for any other reason, it shall be treated as a Directive Letter for a GDOT Change, except as provided in Article 17.3.2.5.

17.3.8 Increased Oversight, Testing, and Inspection

17.3.8.1 Upon GDOT's delivery of notice of DB Team Default for any of the following breaches or failures to perform and DB Team's failure to fully cure and correct, within the applicable cure period, if any, available to DB Team under Article 17.1.2, GDOT shall have the right and authority to suspend any affected portion of the Work by written order to DB Team.

17.3.8.2 If GDOT cannot confirm that a portion of the Design Work or the Construction Work is in accordance with the requirements of the DB Documents, GDOT shall have the right but not the obligation to provide increased monitoring, inspection, sampling, measuring, testing and oversight. If the increased monitoring, inspection, sampling, measuring, testing and oversight reveal: (i) a failure to perform such Work in accordance with the Quality Management Plan, (ii) that the Quality Management Plan does not comply with the DB Documents, or (iii) that such Work is not in accordance with the DB Documents, DB Team shall be responsible for the costs of such increased monitoring, inspection, sampling, measuring, testing and oversight as described in this Article 17.3.8. DB Team shall correct such deficiencies and the increased monitoring, inspection, sampling, measuring, testing and oversight will continue until those deficiencies have been corrected. If such Work was performed in accordance with the DB Documents, the costs of the increased monitoring, inspection, sampling, measuring, testing and oversight shall be borne by GDOT.

17.3.8.3 If GDOT increases the level of monitoring, inspection, sampling, measuring, testing, auditing and oversight under Article 17.3.8.2 and Liquidated Damages are not provided for under this Agreement in connection with such action, then DB Team shall pay and reimburse GDOT within 30 days after receipt of written demand and reasonable supporting documentation for all increased costs and fees GDOT incurs in connection with such action, including GDOT Recoverable Costs.

17.3.8.4 The foregoing does not preclude GDOT, at its sole discretion and expense, from increasing its level of monitoring, inspection, sampling, measuring, testing, auditing and oversight at other times.

17.3.9 Other Rights and Remedies

Subject to Article 17.3.11, Article 17.4.5.2 and Article 19.9, GDOT shall also be entitled to exercise any other rights and remedies available under this Agreement or any other DB Documents, or available at law or in equity.

17.3.10 Cumulative, Non-Exclusive Remedies

Subject to Articles 17.3.11, 17.4.5.2 and 19.9, each right and remedy of GDOT hereunder shall be cumulative and shall be in addition to every other right or remedy provided herein or now or hereafter existing at Law or in equity or by statute or otherwise, and the exercise or beginning of the exercise by GDOT of any one or more of any of such rights or remedies shall not preclude the simultaneous or later exercise by GDOT of any or all other such rights or remedies.

17.3.11 Limitation on Consequential Damages

17.3.11.1 Notwithstanding any other provision of the DB Documents and except as set forth in Article 17.3.11.2, to the extent permitted by applicable Law, DB Team shall not be liable for punitive damages or special, indirect or incidental, or consequential damages, whether arising out of breach of this Agreement, tort (including negligence) or any other theory of liability, and GDOT releases DB Team from any such liability, other than for Liquidated Damages for delay, as provided pursuant to this Agreement or otherwise to the extent recoverable from insurance.

17.3.11.2 The foregoing limitation on DB Team's liability for consequential damages shall not apply to or limit any right of recovery GDOT may have respecting the following:

(a) Losses (including defense costs) to the extent (i) covered by the proceeds of insurance required to be carried pursuant to Article 16.1, (ii) covered by the proceeds of insurance actually carried by or insuring DB Team under policies solely with respect to the Project and the Work, regardless of whether required to be carried pursuant to Article 16.1, or (iii) DB Team is deemed to have self-insured the Loss pursuant to Article 16.3.3;

(b) Losses arising out of fraud, criminal conduct, intentional misconduct (which does not include any intentional DB Team Default), recklessness, bad faith or gross negligence on the part of DB Team or Contractor or any Affiliate of either;

(c) DB Team's obligation to pay Liquidated Damages in accordance with Article 17.4 or any other provision of the DB Documents;

(d) Losses arising out of DB Team Releases of Hazardous Materials;

(e) Reserved;

(f) Amounts DB Team may be obligated to reimburse to GDOT or that are otherwise due from DB Team to GDOT under the express provisions of the DB Documents, including GDOT Recoverable Costs;

(g) Interest, late charges, fees, transaction fees and charges, penalties and similar charges that the DB Documents expressly state are due from DB Team to GDOT; and

(h) Any credits, deductions or offsets that the DB Documents expressly provide to GDOT against amounts owing DB Team.

17.4 Liquidated Damages and Nonrefundable Deductions

17.4.1 Liquidated Damages for Delayed Interim Completion Deadline(s), Substantial Completion Deadline, or Final Acceptance; Incident Based Liquidated Damages

17.4.1.1 DB Team shall be liable for and pay to GDOT Liquidated Damages with respect to any failure to achieve an Interim Completion(s) by the Interim Completion Deadline(s), Substantial Completion by the Substantial Completion Deadline, or any failure to achieve Final Acceptance by the Final Acceptance Deadline, as the same may be extended pursuant to this Agreement, or for any other breach of the requirements of the DB Documents as set forth pursuant to Section 1.1 of Exhibit 18. Such liability shall apply even though (a) a cure period remains available to DB Team under Article 17.1.2 or (b) cure occurs. The amounts of such Liquidated Damages are set forth in Exhibit 18. Such Liquidated Damages shall commence on the Substantial Completion Deadline or the Final Acceptance Deadline, as applicable, or upon the date of breach for each such incident based default pursuant to Section 1.2 of Exhibit 18, as the same may be extended pursuant to this Agreement, and shall continue to accrue until the date of Substantial Completion, the date of Final Acceptance, the cure of any such incident based breach, all as applicable, or until termination of this Agreement.

17.4.1.2 Reserved

17.4.2 Incident Based Nonrefundable Deductions

17.4.2.1 DB Team shall be liable for and pay to GDOT Nonrefundable Deductions with respect to the occurrence of the incidents listed or other breach of the requirements of the DB Documents as set forth pursuant to Section 1.3 of Exhibit 18. Unless otherwise stated in Article 17.4 nonrefundable deductions shall be applied at the time of the incident. The amounts of such Incident Based Nonrefundable Deductions are set forth in Exhibit 18.

17.4.2.2 Within 10 Business Days prior to GDOT issuing any nonrefundable deductions as set forth pursuant to Section 1.3 and excluding Section 1.3.1 of Exhibit 18, GDOT shall execute the following:

(a) Issuance of a warning via email to the DB Team to correct the incident within seven days of receipt of the email; and

(b) Issuance of a formal written warning to the DB Team to correct the incident within three days. If the DB Team has failed to comply with subsection (a) to

correct the incident at the end of the third day then DB Team shall be liable for and shall pay GDOT the Nonrefundable Deduction.

17.4.3 Acknowledgements Regarding Liquidated Damages

DB Team further agrees and acknowledges that:

17.4.3.1 In the event that DB Team fails to achieve Substantial Completion by the Substantial Completion Deadline or Final Acceptance by the Final Acceptance Deadline, GDOT will incur substantial damages;

17.4.3.2 In the event that DB Team causes occurrence of the incidents listed pursuant to Sections 1.2 and 1.3 of Exhibit 18, GDOT will incur substantial damages;

17.4.3.3 Such damages are incapable of accurate measurement and difficult to prove for the reasons stated in this Article 17.4;

17.4.3.4 As of the Effective Date, the amounts of Liquidated Damages under this Article 17.4 represent good faith estimates and evaluations by the Parties as to the actual potential damages that GDOT would incur as a result of late Substantial Completion or late Final Acceptance or should the incidents listed occur, and do not constitute a penalty or to otherwise operate as a deterrent for the breach of any obligations of DB Team under this Agreement;

17.4.3.5 The Parties have agreed to such Liquidated Damages in order to fix and limit DB Team's costs and to avoid later Disputes over what amounts of damages are properly chargeable to DB Team;

17.4.3.6 Such sums are reasonable in light of the anticipated or actual harm caused by delayed Substantial Completion or delayed Final Acceptance or should the incidents listed occur, the difficulties of the proof of loss, and the inconvenience or infeasibility of otherwise obtaining an adequate remedy;

17.4.3.7 DB Team acknowledges that such Liquidated Damages are reasonable, as determined as of the Effective Date, in light of the respective injuries and damages that may be caused by DB Team's breach and given that such injuries and damages, which include but shall not be limited to, public inconvenience, increased administration and oversight by GDOT (and any other related agencies), and other damages to the general public, GDOT (and other related agencies); and

17.4.3.8 Such Liquidated Damages are not intended to, and do not, liquidate DB Team's liability under the indemnification provisions of Article 16.5, even though Third-Party Claims against Indemnified Parties may arise out of the same event, breach or failure that gives rise to such Liquidated Damages.

17.4.4 Payment; Satisfaction; Waiver

17.4.4.1 GDOT shall withhold Liquidated Damages owing under this Article 17.4 from the subsequent DB Team pay application. Liquidated damages

shall be withheld by GDOT without right of offset, deduction, reduction or other charge, except as provided in Article 17.6.3.

17.4.4.2 GDOT shall have the right to deduct and offset Liquidated Damages from any amounts owing DB Team to the extent provided in Article 17.3.4. GDOT also shall have the right to draw on any bond, certificate of deposit, or other security provided by DB Team pursuant to this Agreement, to satisfy Liquidated Damages not paid when due.

17.4.4.3 Permitting or requiring DB Team to continue and finish the Work or any part thereof after the Substantial Completion Deadline or Final Acceptance Deadline shall not act as a waiver of GDOT's right to receive Liquidated Damages hereunder or any rights or remedies otherwise available to GDOT.

17.4.5 Non-Exclusive Remedy

17.4.5.1 Each item of Liquidated Damages provided under this Article 17.4 is in addition to, and not in substitution for, any other item of Liquidated Damages assessed under this Article 17.4.

17.4.5.2 GDOT's right to, and imposition of, Liquidated Damages are in addition, and without prejudice, to any other rights and remedies available to GDOT under the DB Documents, at law or in equity respecting the breach, failure to perform or DB Team Default that is the basis for the Liquidated Damages or any other breach, failure to perform or DB Team Default, except for recovery of the monetary damage for delay that the Liquidated Damages are intended to compensate and for which Liquidated Damaged shall be the only amount recoverable on account of delay damages.

17.5 Default by GDOT; Cure Periods

17.5.1 GDOT Default

GDOT shall, subject to any applicable cure period as set forth in Article 17.5.2 below, be in breach under this Agreement upon the occurrence of any one or more of the following events or conditions (each a "GDOT Default"):

17.5.1.1 GDOT fails to make any payment due DB Team under this Agreement within 30 days of the date that any such payment shall be due;

17.5.1.2 Any representation or covenant made by GDOT in this Agreement is false or materially misleading or materially inaccurate when made or omits material information when made;

17.5.1.3 GDOT fails to observe or perform any covenant, agreement, term or condition required to be observed or performed by GDOT under the DB Documents;

17.5.1.4 GDOT makes an assignment other than as permitted pursuant to Article 21.3; or

17.5.1.5 GDOT or other State Governmental Entity confiscates or appropriates the Project or any other material part of DB Team's Interest, excluding a Termination for Convenience or any other exercise of a right of termination set forth in this Agreement.

17.5.2 Cure Periods

GDOT shall have the following cure periods with respect to the any of the conditions set forth in Article 17.5.1 above:

17.5.2.1 Respecting a GDOT Default under Article 17.5.1.1, a period of 30 days after DB Team delivers to GDOT written notice of the GDOT Default;

17.5.2.2 Respecting a GDOT Default under Article 17.5.1.2 or Article 17.5.1.3, a period of 60 days after DB Team delivers to GDOT written notice of the GDOT Default; provided that (a) if the GDOT Default is of such a nature that the cure cannot with diligence be completed within such time period and GDOT has commenced meaningful steps to cure immediately after receiving the default notice, GDOT shall have such additional period of time, up to a maximum cure period of 180 days, as is reasonably necessary to diligently effect cure, and (b) as to Article 17.5.1.2, cure will be regarded as complete when the adverse effects of the breach are cured;

17.5.2.3 Respecting a GDOT Default under Article 17.5.1.4, a period of 45 days after DB Team delivers to GDOT written notice of the GDOT Default; and

17.5.2.4 Respecting a GDOT Default under Article 17.5.1.5, a period of 30 days after DB Team delivers to GDOT written notice of the GDOT Default; provided that if the GDOT Default is of such a nature that the cure cannot with diligence be completed within such time period and GDOT has commenced meaningful steps to cure immediately after receiving the default notice, GDOT shall have such additional period of time, up to a maximum cure period of 120 days, as is reasonably necessary to diligently effect cure.

17.6 DB Team Remedies for GDOT Default

17.6.1 Termination and Suspension

17.6.1.1 Subject to Article 19.9, DB Team will have the right to suspend performance of the Work on account of a GDOT Default subject to any applicable notice and cure periods as set forth in Article 17.5.2.

17.6.1.2 Further, DB Team may upon written notice of not less than 15 days to GDOT following expiration of such applicable cure period, where such GDOT Default is continuing, exercise the right to terminate this Agreement and recover termination damages as more particularly set forth in, and subject to the terms and conditions of, Article 19.4.

17.6.2 Damages and Other Remedies

DB Team shall have and may exercise the following remedies upon the occurrence of a GDOT Default and expiration, without cure, of the applicable cure period:

17.6.2.1 If DB Team does not terminate this Agreement, then, subject to Article 17.6.4, DB Team may treat the GDOT Default as a Compensation Event on the terms and conditions set forth in Article 14.2 and GDOT shall pay the full Compensation Amount and interest in accordance with Articles 14.2.7 and 14.2.8;

17.6.2.2 If the GDOT Default is a failure to pay when due any undisputed portion of a progress payment owing under a Supplemental Agreement and GDOT fails to cure such GDOT Default within 30 days after receiving from DB Team written notice thereof, DB Team shall be entitled to suspend the Work under the Supplemental Agreement until the default is cured; and

17.6.2.3 Subject to Articles 17.6.4 and 19.9, DB Team also shall be entitled to exercise any other remedies available under this Agreement or at Law or in equity, including offset rights to the extent and only to the extent available under Article 17.6.3. Subject to Articles 17.6.4 and 19.9, each right and remedy of DB Team hereunder shall be cumulative and shall be in addition to every other right or remedy provided herein or now or hereafter existing at Law or in equity or by statute or otherwise, and the exercise or beginning of the exercise by DB Team of any one or more of any of such rights or remedies shall not preclude the simultaneous or later exercise by DB Team of any or all other such rights or remedies.

17.6.3 Offset Rights

DB Team may deduct and offset any claim amount owing to it, provided such claim amount has been liquidated through the Dispute Resolution Procedures, as provided in Article 17.7 or otherwise, from and against any amounts DB Team may owe to GDOT pursuant hereto.

17.6.4 Limitations on Remedies

17.6.4.1 Notwithstanding any other provision of the DB Documents and except as forth in Article 17.6.4.2, to the extent permitted by applicable Law, GDOT shall not be liable for punitive damages or any indirect, incidental or consequential damages, whether arising out of breach of this Agreement or any DB Documents, tort (including negligence) or any other theory of liability, and DB Team releases GDOT from any such liability.

17.6.4.2 The foregoing limitation on GDOT's liability for consequential damages shall not apply to or limit any right of recovery DB Team may have respecting the following:

(a) Losses arising out of fraud, criminal conduct, intentional misconduct (which does not include any intentional GDOT

Default), recklessness, bad faith or gross negligence on the part of GDOT;

(b) Losses arising out of GDOT Release(s) of Hazardous Materials or Pre-Existing Hazardous Materials;

(c) Any amounts GDOT may owe or be obligated to reimburse under the express provisions of this Agreement for Compensation Events or events of termination;

(d) Any other specified amounts GDOT may owe or be obligated to reimburse to DB Team under the express provisions of the DB Documents;

(e) Interest and charges that the DB Documents expressly state are due from GDOT to DB Team; and

(f) Any credits, deductions or offsets that the DB Documents expressly provide to DB Team against amounts owing GDOT.

17.6.4.3 The measure of compensation available to DB Team as set forth in this Agreement for a Compensation Event or an event of termination shall constitute the sole and exclusive monetary relief and damages available to DB Team from the State or GDOT arising out of or relating to such event; and DB Team irrevocably waives and releases any right to any other or additional damages or compensation from the State or GDOT. No award of compensation or damages shall be duplicative.

17.6.4.4 Without limiting the effect of Article 17.6.4.3, in the event GDOT wrongfully withholds an acceptance or consent required under this Agreement, or wrongfully issues an objection to or disapproval of a Submittal or other matter under this Agreement, DB Team's sole remedies against GDOT shall be extensions of time to the extent provided in Article 14.1 for a Relief Event and damages to the extent provided in Article 14.2 for a Compensation Event.

17.6.5 Procedure for Payment of Judgments

Promptly after any final, non-appealable order or judgment awarding compensation or damages to DB Team, GDOT shall institute payment procedures as set forth in applicable Law.

17.7 Dispute Resolution Procedures

17.7.1 The Parties shall endeavor to resolve any Dispute that may arise between them through good faith negotiations and/or partnering in accordance with Section 2.1.3 of the Technical Provisions. If the Dispute is not resolved to the mutual satisfaction of all Parties within 30 days after written notification of such Dispute, or such longer time as is mutually agreed, the dispute shall next be submitted in accordance with Article 17.7.2.

17.7.2 If, despite good faith negotiations between the Parties, any Disputes are not resolved within 30 days after written notification of such Dispute, then the Dispute shall be submitted administratively to mediation as set forth below.

17.7.2.1 The Parties shall mutually select a private mediator to formally mediate the Disputes. If the Parties cannot mutually select a private mediator, GDOT shall select a mediator. Mediation shall normally be scheduled within 45 Calendar Days of notification of the decision by either party to submit the Dispute to mediation. GDOT and DB Team shall each pay one-half of the fees and administrative costs charged by the selected mediator.

17.7.2.2 The Parties, to provide economies of scale, may mutually agree in writing to submit one or more Disputes, whether or not factually related, to a single mediation. In such event, time periods may be extended by mutual written agreement to facilitate preparation for the mediation.

17.7.2.3 If the Dispute has not been settled within 45 Calendar Days following written notification of the Dispute to mediation or within such other period that the Parties may agree in writing, such Dispute may be submitted to litigation by either party in accordance with Article 17.7.4.

17.7.3 No litigation may be filed by either Party concerning any Dispute prior to using the procedure described in Article 17.7.2. This procedure is a condition precedent for any Party to commence a civil action for resolution of a Dispute.

17.7.4 All litigation between the Parties arising out of or pertaining to this Agreement or its breach shall be filed, heard and decided in the Superior Court of Fulton County, Georgia, which shall have exclusive jurisdiction and venue pursuant to O.C.G.A. § 50-21-1. Each Party shall bear its own attorney's fees and costs in any dispute or litigation arising out of or pertaining to this Agreement, and no Party shall seek or accept an award of attorney's fees or costs.

Article 18 RESERVED

Article 19 TERMINATION

19.1 Termination for Convenience

19.1.1 GDOT may terminate this Agreement, if GDOT determines, in its sole discretion, that a termination is in GDOT's best interest (a "Termination for Convenience"). Termination of this Agreement shall not relieve GDOT, DB Team or any Guarantor or Surety of its obligation for any claims arising prior to termination.

19.1.2 GDOT may exercise Termination for Convenience by delivering to DB Team a written notice of termination for Convenience specifying the election to terminate. Termination for Convenience shall be effective as and when provided in Exhibit 20.

19.1.3 In the event of a Termination for Convenience, DB Team will be entitled to compensation determined in accordance with Exhibit 20. Payment will be due and payable as and when provided in Exhibit 20.

19.1.4 If GDOT terminates this Agreement on grounds or in circumstances beyond GDOT's termination rights specifically set forth in this Agreement, such termination shall be deemed a Termination for Convenience for the purpose of determining the Termination Compensation due.

19.2 Reserved

19.3 Termination for DB Team Default

19.3.1 DB Team Defaults Triggering GDOT Termination Rights

The following DB Team Defaults (each a "Default Termination Event"), and no other DB Team Defaults, shall entitle GDOT, at its sole election, to terminate this Agreement, effective immediately upon delivery of written notice of termination to DB Team. DB Team agrees and acknowledges and stipulates that any of the following DB Team Defaults would result in material and substantial harm to GDOT's rights and interests under this Agreement and therefore constitute a material DB Team Default justifying termination if not cured within the applicable cure period, if any.

19.3.1.1 The DB Team fails to achieve Substantial Completion by the Substantial Completion Deadline, as the same may be extended pursuant to this Agreement;

19.3.1.2 There occurs any other DB Team Default for which GDOT issues a Warning Notice under Article 17.2 or 17.3, and such DB Team Default is not fully and completely cured within the applicable cure period, if any, set forth in Article 17.2.2.1 or 17.3;

19.3.1.3 There occurs any DB Team Default under Article 17.1.1.11 or 17.1.1.12; or

19.3.1.4 The DB Team fails to diligently prosecute and adhere to the requirements of any remedial action plan as provided and accepted by GDOT pursuant to Article 17.3.5.

19.3.2 Compensation to DB Team

If GDOT issues notice of termination of this Agreement due to a Default Termination Event, or if DB Team terminates this Agreement on grounds or in circumstances beyond DB Team's termination rights specifically set forth in this Agreement, DB Team will be entitled to compensation to the extent, and only to the extent, provided in Exhibit 20. Payment shall be due and payable as and when provided in Exhibit 20.

19.3.3 Finality

If GDOT issues notice of termination of this Agreement due to a Default Termination Event, termination shall be effective and final immediately upon delivery of written notice

as provided in Article 19.3.1 regardless of whether GDOT is correct in determining that GDOT has the right to terminate for DB Team Default. In the event it is determined that GDOT lacked such right, then such termination shall be treated as a Termination for Convenience as provided in Article 19.1.4 for the purpose of determining the Termination Compensation due.

19.4 Termination for GDOT Default, Suspension of Work, Force Majeure Event, or Materially Delayed Notice to Proceed

19.4.1 In the event of a material GDOT Default under Article 17.5.1.1 (failure to pay money due) that remains uncured following notice and expiration of the applicable cure period under Article 17.5.2, DB Team may deliver to GDOT a further written notice setting forth such GDOT Default and warning GDOT that DB Team may elect to terminate this Agreement and if GDOT does not cure such GDOT Default within 60 days after the delivery of such notice with respect to a GDOT Default under Article 17.5.1.1. GDOT may avoid termination by effecting cure within such 60-day period. Failing such cure, DB Team shall have the right to terminate this Agreement, effective immediately upon delivery of written notice of termination to GDOT. In the event of such termination, DB Team will be entitled to compensation determined in accordance with Exhibit 20. Payment shall be due and payable as and when provided in Exhibit 20. Any Dispute arising out of the determination of such compensation shall be resolved according to the Dispute Resolution Procedures.

19.4.2 In the event (i) GDOT orders DB Team to suspend Work on all or any material portion of the Project for a reason other than those set forth in Article 17.3.7.1, or (ii) as a result of a Force Majeure Event, and such suspension of Work continues for a period of 180 consecutive days or more, DB Team shall have the right to terminate this Agreement, effective immediately upon delivery of written notice of termination to GDOT. In the event of such termination, DB Team will be entitled to compensation determined in accordance with Exhibit 20. Payment shall be due and payable as and when provided in Exhibit 20. Any Dispute arising out of the determination of such compensation shall be resolved according to the Dispute Resolution Procedures.

19.4.3 In the event GDOT, due to no fault of a DB Team-Related Entity or other than because the NEPA Finality Date has not occurred, does not issue NTP 1, NTP 2, or NTP 3 within 365 days after the anticipated issuance date set forth in Article 3.3, DB Team shall have the right to terminate this Agreement, effective immediately upon delivery of written notice of termination to GDOT. In the event of such termination, DB Team will be entitled to compensation determined in accordance with Exhibit 20. Payment shall be due and payable as and when provided in Exhibit 20. Any Dispute arising out of the determination of such compensation shall be resolved according to the Dispute Resolution Procedures.

19.4.4 If DB Team issues notice of termination of this Agreement due to a material GDOT Default under Article 17.5.1.1, termination shall be effective and final immediately upon delivery as provided in Article 19.4.1 regardless of whether DB Team is correct in determining that it has the right to terminate for such GDOT Default. In the event it is determined that DB Team lacked such right, then such termination shall be treated as a termination due to material DB Team Default and Article 19.3.2 shall govern the measure of the Termination Compensation.

19.5 Termination Procedures and Duties

19.5.1 Upon expiration of the Term or any earlier termination of this Agreement for any reason, including due to GDOT Default, the provisions of this Article 19.5 shall apply. DB Team shall timely comply with such provisions independently of, and without regard to, the timing for determining, adjusting, settling and paying any amounts due DB Team or GDOT on account of termination.

19.5.2 In any case where notice of termination precedes the effective Early Termination Date:

19.5.2.1 DB Team shall continue performing the Work in accordance with, and without excuse from, all the standards, requirements and provisions of the DB Documents, and without curtailment of services, quality and performance;

19.5.2.2 Reserved

19.5.2.3 At GDOT's option, GDOT may increase the level of its monitoring, inspection, sampling, measuring, testing, auditing and oversight of the Project and DB Team's compliance with the obligations under the DB Documents, to such level as GDOT reasonably sees fit to protect against curtailment of services, quality and performance; and

19.5.2.4 Within three days after receipt of a notice of termination, DB Team shall meet and confer with GDOT for the purpose of developing an interim transition plan for the orderly transition of Work, demobilization and transfer of the Project control to GDOT. The Parties shall use diligent efforts to complete preparation of the interim transition plan within 15 days after the date DB Team receives the notice of termination. The Parties shall use diligent efforts to complete a final transition plan within 30 days after such date. The transition plan shall be in form and substance acceptable to GDOT in its good faith discretion and shall include and be consistent with the other provisions and procedures set forth in this Article 19.5, all of which procedures DB Team shall immediately follow, regardless of any delay in preparation or acceptance of the transition plan.

19.5.3 On the Termination Date, or as soon thereafter as is possible, DB Team shall relinquish and surrender full control and possession of the Project to GDOT, and shall cause all persons and entities claiming under or through DB Team to do likewise, in at least the condition required by the Termination turnover requirements.

19.5.4 On the later of the Termination Date or the date DB Team relinquishes full control and possession, GDOT shall assume responsibility, at its expense, for the Project, subject to any rights to damages that GDOT has against DB Team where the termination is due to a Default Termination Event.

19.5.5 Reserved

19.5.6 Reserved

19.5.7 Within 30 days after notice of termination is delivered, DB Team shall provide GDOT with a true and complete list of all materials, goods, machinery, equipment, parts, supplies and other property in inventory or storage (whether held by DB Team or any Person or entity on behalf of or for the account of DB Team) for use in or respecting the Work or the Project, or on order or previously completed but not yet delivered from Suppliers for use in or respecting the Work or the Project. In addition, on or about the Termination Date, DB Team shall transfer title and deliver to GDOT or GDOT's Authorized Representative, through bills of sale or other documents of title, as directed by GDOT, all such materials, goods, machinery, equipment, parts, supplies and other property.

19.5.8 DB Team shall take all action that may be necessary, or that GDOT may direct, for the protection and preservation of the Project, the Work and such materials, goods, machinery, equipment, parts, supplies and other property.

19.5.9 On or about the Termination Date, DB Team shall execute and deliver to GDOT the following, together with an executed bill of sale or other written instrument, in form and substance acceptable to GDOT, acting reasonably, assigning and transferring to GDOT all of DB Team's right, title and interest in and to the following:

19.5.9.1 All completed or partially completed drawings (including plans, elevations, sections, details and diagrams), specifications, designs, Design Documents, as-built and Record Drawings, plans, surveys, and other documents and information pertaining to the design or construction of the Project or the Utility Adjustments;

19.5.9.2 All samples, borings, boring logs, geotechnical data and similar data and information relating to the Project;

19.5.9.3 All books, records, reports, test reports, studies and other documents of a similar nature relating to the Work, the Project;

19.5.9.4 All data and information relating to the use of the Project, including all studies, reports, and other information provided that the transfer of any Intellectual Property shall be subject to Article 22.4; and

19.5.9.5 All other work product and Intellectual Property used or owned by DB Team or any Affiliate relating to the Work, the Project, provided that the transfer of any Intellectual Property shall be subject to Article 22.4.

19.5.10 Reserved

19.5.11 On or about the Termination Date, DB Team shall execute and deliver to GDOT a written assignment, in form and substance acceptable to GDOT, acting reasonably, of all DB Team's right, title and interest in and to all warranties, claims and causes of action held by DB Team against third parties in connection with the Project or the Work.

19.5.12 DB Team shall otherwise assist GDOT in such manner as GDOT may require prior to and for a reasonable period following the Termination Date to ensure the orderly transition of the Project and its management to GDOT.

19.6 Reserved

19.7 Contracts and Agreements

19.7.1 Regardless of GDOT's prior actual or constructive knowledge thereof, no contract or agreement to which DB Team is a party (unless GDOT is also a party thereto) as of the Termination Date shall bind GDOT, unless GDOT elects to assume such contract or agreement in writing. Except in the case of GDOT's express written assumption, no such contract or agreement shall entitle the contracting party to continue performance of work or services respecting the Project following DB Team's relinquishment to GDOT of possession and control of the Project, or to any claim, legal or equitable, against GDOT.

19.8 Liability After Termination; Final Release

19.8.1 No termination of this Agreement shall excuse either Party from any liability arising out of any default as provided in this Agreement that occurred prior to termination. Notwithstanding the foregoing, any termination of this Agreement shall automatically extinguish any claim of DB Team to payment of Compensation Amounts for adverse cost and revenue impacts accruing after the Early Termination Date from Compensation Events that occurred prior to termination.

19.8.2 If this Agreement is terminated under Article 19.1, 19.3.1, 19.4, or 19.11, then GDOT's payment to DB Team of the amounts required thereunder (if any) shall constitute full and final satisfaction of, and upon payment GDOT shall be forever released and discharged from, any and all claims, causes of action, suits, demands and Losses, known or unknown, suspected or unsuspected, that DB Team may have against GDOT arising out of or relating to this Agreement or termination thereof, or the Project, are unresolved at the time of such payment and are not related to termination or Termination Compensation. Upon such payment, DB Team shall execute and deliver to GDOT all such releases and discharges as GDOT may reasonably require to confirm the foregoing, but no such written release and discharge shall be necessary to give effect to the foregoing satisfaction and release.

19.9 Exclusive Termination Rights

This Article 19, together with the express provisions on termination set forth in Articles 17.3.1 and 17.6.1, contain the entire and exclusive provisions and rights of GDOT and DB Team regarding termination of this Agreement, and any and all other rights to terminate at law or in equity are hereby waived to the maximum extent permitted by Law.

19.10 Access to Information

DB Team shall conduct all discussions and negotiations to determine any Termination Compensation, and shall share with GDOT all data, documents and information pertaining thereto, on an Open Book Basis.

19.11 Termination by Court Ruling

19.11.1 Except in the circumstances described in Exhibit 20, Termination by Court Ruling means, and becomes effective upon, (a) issuance of a final order by a court

of competent jurisdiction to the effect that this Agreement is void and/or unenforceable or impossible to perform in its entirety, (b) issuance of a final order by a court of competent jurisdiction upholding the binding effect on DB Team or GDOT of a Change in Law that causes impossibility of performance of a fundamental obligation by DB Team or GDOT under the DB Documents or impossibility of exercising a fundamental right of DB Team or GDOT under the DB Documents, (c) occurrence of the circumstances described in Article 24.13.2, or (d) issuance of a final order by a court of competent jurisdiction to the effect that a material provision under the DB Documents is void and/or unenforceable so as to deprive DB Team of its ability to exercise a fundamental right granted to DB Team under the DB Documents and such inability resulting from such order cannot be otherwise remedied through a Compensation Event, Relief Event or other contractual remedy. The final court order shall be treated as the notice of termination.

19.11.2 Once Termination by Court Ruling becomes effective, GDOT and DB Team shall cooperate to implement Articles 19.5, 19.8, and 19.10.

19.11.3 Notwithstanding Article 19.11.2, if a Termination by Court Ruling occurs, DB Team shall be entitled to compensation to the extent, and only to the extent, provided in Exhibit 20. Payment shall be due and payable as and when provided in Exhibit 20. Any Dispute arising out of the determination of such compensation shall be resolved according to the Dispute Resolution Procedures.

Article 20 RESERVED

Article 21 ASSIGNMENT AND TRANSFER

21.1 Restrictions on Assignment, Subletting and Other Transfers

21.1.1 DB Team shall not voluntarily or involuntarily sell, assign, convey transfer, pledge, mortgage or otherwise encumber the DB Team's Interest or any portion thereof without GDOT's prior written acceptance (including under any Direct Agreement), except:

21.1.1.1 To any entity that is under the same ultimate management control as DB Team.

21.1.2 DB Team shall not grant any other special occupancy or use of the Project to any other Person that is not in the ordinary course of DB Team performing the Work, without GDOT's prior written acceptance.

21.1.3 Any sale, assignment, conveyance, transfer, pledge, mortgage, encumbrance, or grant of other special occupancy or use in violation of this provision shall be null and void *ab initio* and GDOT may, by Warning Notice, declare any such attempted action to be a material DB Team Default.

21.2 Standards and Procedures for GDOT Acceptance

21.2.1 Where GDOT's prior acceptance is required for a proposed sale, assignment, conveyance, transfer, pledge, mortgage, encumbrance, sublease or grant of other special occupancy or use, or for any proposed Change of Control, GDOT may

withhold or condition its acceptance in its sole discretion. Any such decision of GDOT to withhold consent shall be final, binding and not subject to the Dispute Resolution Procedures.

21.2.2 Thereafter, GDOT shall not unreasonably withhold its acceptance thereto. Among other reasonable factors and considerations, it shall be reasonable for GDOT to withhold its acceptance if:

21.2.2.1 DB Team fails to demonstrate to GDOT's reasonable satisfaction that the proposed assignee, sublessee, grantee or transferee, or the proposed transferee of rights and/or equity interests that would amount to a Change of Control (for purposes of these Articles 21.2 through 21.5, collectively the "Transferee"), and its proposed contractors (a) have the financial resources, qualifications and experience to timely perform DB Team's obligations under the DB Documents and Principal Project Documents and (b) are in compliance with GDOT's rules, regulations and adopted written policies regarding organizational conflicts of interest;

21.2.2.2 Less than all of DB Team's Interest is proposed to be assigned, conveyed, transferred, pledged, mortgaged, encumbered, or granted; or

21.2.2.3 At the time of the proposed sale, assignment, conveyance, transfer, pledge, mortgage, encumbrance, sublease or grant of other special occupancy or use requiring GDOT's prior acceptance, or of any proposed Change of Control, there exists any uncured DB Team Default or any event or circumstance that with the lapse of time, the giving of notice or both would constitute a DB Team Default, unless GDOT receives from the proposed Transferee assurances of cure and performance acceptable to GDOT in its good faith discretion.

21.2.3 GDOT will accept or disapprove within 30 days after it receives from DB Team a Submittal consisting of a request for acceptance together with (a) a reasonably detailed description of the proposed transaction, (b) such information, evidence and supporting documentation as GDOT may request concerning the identity, financial resources, qualifications, experience and potential conflicts of interest of the proposed Transferee and its proposed contractors and (c) such evidence of organization and authority, and such incumbency certificates, certificates regarding debarment or suspension, and other certificates, representations and warranties as GDOT may reasonably request. GDOT will evaluate the identity, financial resources, qualifications, experience and potential conflicts of interest using the same standards and criteria that it is then currently applying, or if there is no current application, then the same standards and criteria it most recently applied, to the evaluation of Persons responding to GDOT requests for qualifications for concession or similar agreements for comparable projects and facilities.

21.2.4 If for any reason GDOT does not act within such 30-day period, or any extension thereof by mutual agreement of the Parties, then the provisions of Article 6.3.4.2 shall apply.

21.3 Assignment by GDOT

GDOT may assign all or any portion of its rights, title and interests in and to the DB Documents, payment and performance bond(s), guarantees, and other security for payment or performance, (a) without DB Team's consent, to any other Person that succeeds to the governmental powers and authority of GDOT, and (b) to others with the prior written consent of DB Team.

21.4 Notice and Assumption

21.4.1 Assignments and transfers of the DB Team's Interest permitted under this Article 21 (other than pursuant to Article 21.1.1.1) or otherwise accepted in writing by GDOT shall be effective only upon GDOT's receipt of written notice of the assignment or transfer and a written recordable instrument executed by the Transferee, in form and substance acceptable to GDOT, in which the Transferee, without condition or reservation, assumes all of DB Team's obligations, duties and liabilities under the DB Documents and agrees to perform and observe all provisions thereof applicable to DB Team.

21.4.2 Each Transferee, including any Person who acquires the DB Team's Interest pursuant to foreclosure, transfer in lieu of foreclosure or similar proceeding, shall take the DB Team's Interest subject to, and shall be bound by, the Management Plans, the Key Contracts, the Standard Utility Agreements, all agreements between the transferor and railroads, the Governmental Approvals, and all agreements between the transferor and Governmental Entities with jurisdiction over the Project or the Work, except to the extent otherwise accepted by GDOT in writing in its good faith discretion.

21.4.3 Except with respect to assignments and transfers pursuant to foreclosure, transfer in lieu of foreclosure or similar proceeding, the transferor and Transferee shall give GDOT written notice of the assignment not less than 30 days prior to the effective date thereof.

21.5 Change of Organization or Name

21.5.1 DB Team shall not change the legal form of its organization in a manner that adversely affects GDOT's rights, protections and remedies under the DB Documents without the prior written acceptance of GDOT, which consent may be granted or withheld in GDOT's sole discretion.

21.5.2 In the event either Party changes its name, such Party agrees to promptly furnish the other Party with written notice of change of name and appropriate supporting documentation.

Article 22 RECORDS AND AUDITS; INTELLECTUAL PROPERTY

22.1 Maintenance and Inspection of Records

22.1.1 DB Team shall keep and maintain at a single location as approved by GDOT all books, records and documents relating to the Project, Utility Adjustments or Work, including copies of all original documents delivered to GDOT, as set forth in Exhibit 24. DB Team shall keep and maintain such books, records and documents in accordance with applicable provisions of the DB Documents, Section 2 of the Technical

Provisions, and of the Management Plans, and in accordance with Good Industry Practice. DB Team shall notify GDOT where such records and documents are kept.

22.1.2 DB Team shall make all its books, records and documents available for inspection by GDOT, its representatives and legal counsel at DB Team's principal offices in Georgia, at all times during normal business hours, without charge. GDOT may conduct any such inspection upon 48 hours' prior written notice, or unannounced and without prior notice where there is good faith suspicion of fraud. The right of inspection includes the right to make extracts and take notes. The provisions of this Article 22.1.2 are subject to the following:

22.1.2.1 DB Team reserves the right to assert exemptions from disclosure for information that would be exempt under applicable State Law from discovery or introduction into evidence in legal actions; and

22.1.2.2 Unless otherwise lawfully required by the FHWA, federal Law or the Open Government Laws, DB Team may make available copies of books, records and documents containing trade secrets and confidential proprietary information with such information redacted. Unless otherwise lawfully required by the FHWA, federal Law or the Open Government Laws, GDOT shall have no right to make extracts of such trade secrets and confidential proprietary information except in connection with resolution of Disputes.

22.1.2.3 DB Team shall retain records and documents for a minimum of five years after the date the record or document is generated; provided that if the DB Documents or applicable Law specify any longer time period for retention of particular records, such time period shall control. With respect to records and documents generated prior to Final Acceptance, the time period for retention shall commence upon Final Acceptance. Notwithstanding the foregoing, all records which relate to any actions brought forth under the Dispute Resolution Procedures shall be retained and made available until any later date that such actions are finally resolved. Refer to Attachment 1 to Exhibit 8 regarding applicable Federal Requirements.

22.2 Audits

22.2.1 GDOT shall have such rights to review and audit DB Team, its Contractors and their respective books and records as and when GDOT deems necessary for purposes of verifying compliance with the DB Documents and applicable Law. Without limiting the foregoing, GDOT shall have the right to audit DB Team's Management Plans and compliance therewith, including the right to inspect Work and/or activities and to verify the accuracy and adequacy of the Management Plans and its component parts, plans and other documentation. GDOT may conduct any such audit of books and records upon 48 hours' prior written notice, or unannounced and without prior notice where there is good faith suspicion of fraud.

22.2.2 All claims filed against GDOT shall be subject to audit at any time following the filing of the claim. The audit may be performed by employees of GDOT or by an auditor under contract with GDOT. Notice shall not be required before commencing any audit prior to 60 days after the expiration of the term of this Agreement. Thereafter, GDOT shall provide 20 days' notice to DB Team, any Contractors or their

respective agents before commencing an audit. DB Team, Contractors or their agents shall provide adequate facilities, acceptable to GDOT, for the audit during normal business hours. DB Team, Contractors or their agents shall cooperate with the auditors. Failure of DB Team, Contractors or their agents to maintain and retain sufficient books and records to allow the auditors to verify all or a portion of the claim or to permit the auditor access to such books and records shall constitute a waiver of the claim and shall bar any recovery thereunder. At a minimum, the auditors shall have available to them the following documents relating to the claim:

(a) Daily time sheets and supervisor's daily reports;

(b) Union agreements;

(c) Insurance, welfare, and benefits records;

(d) Payroll registers;

(e) Earnings records;

(f) Payroll tax forms;

(g) Material invoices and requisitions;

(h) Material cost distribution work sheet;

(i) Equipment records (list of company equipment, rates, etc.);

(j) Contractors' (including Suppliers') invoices;

(k) Contractors' and agents' payment certificates;

(l) Canceled checks (payroll and Suppliers);

(m) Job cost report;

(n) Job payroll ledger;

(o) General ledger;

(p) Cash disbursements journal;

(q) All documents that relate to each and every claim together with all documents that support the amount of damages as to each claim; and

(r) Work sheets used to prepare the claim establishing (a) the cost components of the claim, including labor, benefits and insurance, materials, equipment, Contractors, all documents that establish the time periods, individuals involved, the hours for the individuals, and the rates for the individuals, and (b) the lost revenue components of the claim.

22.2.3 Full compliance by DB Team with the provisions of this Article 22.2 is a contractual condition precedent to DB Team's right to seek relief on a Dispute under Article 17.7.

22.2.4 Any rights of the FHWA to review and audit DB Team, its Contractors and their respective books and records are set forth in Attachment 1 to Exhibit 8.

22.2.5 GDOT's right of audit include the right to observe the business operations of DB Team and its Contractors to confirm the accuracy of books and records.

22.2.6 DB Team represents and warrants the completeness and accuracy in all material respects of all information it or its agents provides in connection with GDOT audits, and shall cause all Contractors other than Governmental Entities acting as Contractors to warrant the completeness and accuracy in all material respects of all information such Contractors provide in connection with GDOT audits.

22.2.7 Nothing in the DB Documents shall in any way limit the constitutional and statutory powers, duties and rights of elected State officials, including the independent rights of the State Auditor, in carrying out his or her legal authority. DB Team understands and acknowledges that (a) the State auditor may conduct an audit or investigation of any entity receiving funds from the State directly under this Agreement or indirectly through a Contract, (b) acceptance of funds directly under this Agreement or indirectly through a Contract acts as acceptance of the authority of the State auditor to conduct an audit or investigation in connection with those funds, and (c) an entity that is the subject of an audit or investigation must provide the State auditor with access to any information the State auditor considers relevant to the investigation or audit.

22.3 Open Government Laws and Freedom of Information Act

22.3.1 DB Team acknowledges and agrees that all Submittals, records, documents, drawings, Plans, specifications and other materials in GDOT's possession, including materials submitted by DB Team to GDOT (whether directly or indirectly), are subject to the provisions of the Open Government Laws, subject only to certain exceptions and exemptions contained therein. DB Team also acknowledges that, pursuant to O.C.G.A. § 50-18-70(a), "records received or maintained by a private person, firm, corporation, or other private entity in the performance of a service or function for or on behalf of an agency, a public agency, or a public office shall be subject to disclosure to the same extent that such records would be subject to disclosure if received or maintained by such agency, public agency, or public office." If DB Team believes information or materials submitted or otherwise made available to GDOT constitute trade secrets, proprietary information or other information that is not subject to the Open Government Laws or is excepted from disclosure under the Open Government Laws, DB Team shall be solely responsible for specifically and conspicuously designating that information by placing "CONFIDENTIAL" in the center header of each such document or page affected, as it determines to be appropriate. Any specific proprietary information, trade secrets or confidential commercial and financial information shall be clearly identified as such, and shall be accompanied by a concise statement of reasons supporting the claim. Nothing contained in this Article 22.3.1 shall modify or amend requirements and obligations imposed on GDOT by the Open Government Laws or other applicable Law, and the provisions of the Open Government

Laws or other Laws shall control in the event of a conflict between the procedures described above and the applicable Law. DB Team is advised to contact legal counsel concerning such Law and its application to DB Team.

22.3.2 If GDOT receives a request for public disclosure of materials marked "CONFIDENTIAL," GDOT (as the case may be) will endeavor to notify DB Team of the request. DB Team may seek a protective order or other appropriate remedy. If GDOT determines in good faith that the materials identified as "CONFIDENTIAL" are not exempt from the Open Government Laws, GDOT will release the requested information within the applicable statutory time period, unless otherwise directed by an order of a court of competent jurisdiction. GDOT shall make the final determination regarding whether the requested information is to be disclosed or withheld.

22.3.3 In the event of any proceeding or litigation concerning the disclosure of any material submitted by DB Team to GDOT, DB Team shall be fully responsible for otherwise prosecuting or defending any action concerning the materials at its sole cost and risk; provided, however, that the Attorney General shall represent GDOT, which will participate in the litigation in such manner as they each may deem necessary or desirable. Except in the case of GDOT's voluntary intervention in litigation, DB Team shall pay and reimburse GDOT (as the case may be) within 30 days after receipt of written demand and reasonable supporting documentation for all costs and fees, including attorneys' fees and costs, GDOT incurs in connection with any litigation, proceeding or request for disclosure.

22.3.4 DB Team further acknowledges and agrees that all Submittals, records, documents, drawings, Plans, specifications and other materials in FHWA's possession may also be subject to disclosure under federal Law, including the Freedom of Information Act. DB Team's rights and obligations with respect to such disclosure shall be in accordance with such federal Law.

22.4 Intellectual Property

22.4.1 All Proprietary Intellectual Property, including with respect to Technology Enhancements, Source Code and Source Code Documentation, shall remain exclusively the property of DB Team or its Affiliates or Contractors that supply the same, notwithstanding any delivery of copies thereof to GDOT.

22.4.2 GDOT shall have and is hereby granted a nonexclusive, transferable, irrevocable, fully paid up right and license to use, reproduce, modify, adapt and disclose, and sublicense others to use, reproduce, modify, adapt and disclose, the Proprietary Intellectual Property of DB Team, including with respect to Technology Enhancements, Source Code and Source Code Documentation, solely in connection with the Project and any Highway, tolled or not tolled, owned and operated by GDOT or a State or regional Governmental Entity.

22.4.3 Subject to the license and rights granted to GDOT pursuant to Article 22.4.2, GDOT shall not at any time sell any Proprietary Intellectual Property of DB Team or use, reproduce, modify, adapt and disclose, or allow any party to use, reproduce, modify, adapt and disclose, any such Proprietary Intellectual Property for any other purpose not consistent with Article 22.4.2 above.

22.4.4 The right to transfer the license is limited to any Governmental Entity that succeeds to the power and authority of GDOT generally or with respect to the Project.

22.4.5 The right to sublicense is limited to State or regional Governmental Entities that own or operate a Highway or other road, tolled or not tolled, and to the concessionaires, contractors, subcontractors, employees, attorneys, consultants and agents that are retained by or on behalf of GDOT or any such State or regional Governmental Entity in connection with the Project or another Highway or other road, tolled or untolled. All such sublicenses shall be subject to Article 22.4.6.

22.4.6 Subject to Article 22.3, GDOT shall:

22.4.6.1 Not disclose any Proprietary Intellectual Property of DB Team to any Person other than authorized transferees and sublicensees who agree to be bound by any confidentiality obligations of GDOT relating thereto;

22.4.6.2 Enter into a commercially reasonable confidentiality agreement if requested by DB Team with respect to the licensed Proprietary Intellectual Property; and

22.4.6.3 Include, or where applicable require such State or regional Governmental Entity to include, in the contract with the sublicensee its covenant to employ sound business practices no less diligent than those used for its own confidential information, and no less diligent than required by commercially reasonable standards of confidentiality, to protect all Proprietary Intellectual Property of DB Team and other materials provided under the sublicense against disclosure to third parties not in receipt of a sublicense, and to use the sublicense only for the permitted purposes.

22.4.7 Notwithstanding any contrary provision of the DB Documents, in no event shall GDOT or any of their respective directors, officers, employees, consultants or agents be liable to DB Team, any Affiliate or any Contractor for any damages, including loss of profit, arising out of breach of the duty of confidentiality set forth in Article 22.4.6 if such breach is not the result of gross negligence or intentional misconduct or is required under the provisions of the Open Government Laws or a court order or other legal requirement.

22.4.8 DB Team shall continue to have a full and complete right to use any and all duplicates or other originals of its Proprietary Intellectual Property in any manner it chooses.

22.4.9 With respect to any Proprietary Intellectual Property, including with respect to Technology Enhancements, Source Code and Source Code Documentation, owned by a Person other than DB Team, including any Affiliate, and other than GDOT or a Governmental Entity acting as a Contractor, DB Team shall obtain from such owner, concurrently with execution of any contract, subcontract or purchase order with such owner or with the first use or adaptation of the Proprietary Intellectual Property in connection with the Project, for DB Team and GDOT, nonexclusive, transferable, irrevocable, fully paid up licenses to use, reproduce, modify, adapt and disclose such Proprietary Intellectual Property solely in connection with the Project and any Highway,

tolled or not tolled, owned and operated by GDOT or a State or regional Governmental Entity, of at least identical scope, purpose, duration and applicability as the license granted under Article 22.4.1. The foregoing requirement shall not apply, however, to mass-marketed software products (sometimes referred to as "shrink wrap software") owned by such a Person where such a license cannot be extended to GDOT using commercially reasonable efforts. The limitations on sale, transfer, sublicensing and disclosure by GDOT set forth in Articles 22.4.3 through 22.4.6 shall also apply to GDOT's licenses in such Proprietary Intellectual Property.

22.5 Reserved

Article 23 FEDERAL REQUIREMENTS

23.1 Compliance with Federal Requirements

DB Team shall comply and require its Contractors to comply with all Federal Requirements applicable to transportation projects that receive federal credit or funds, including those set forth in Exhibit 8. In the event of any conflict between any applicable Federal Requirements and the other requirements of the DB Documents, the Federal Requirements shall prevail, take precedence and be in force over and against any such conflicting provisions.

23.2 Role of and Cooperation with FHWA

DB Team acknowledges and agrees that FHWA will have certain approval rights with respect to the Project, including the right to provide certain oversight and technical services with respect to the Work. DB Team shall cooperate with FHWA in the reasonable exercise of FHWA's duties and responsibilities in connection with the Project and shall provide such assistance and information as may be required by GDOT to comply with FHWA reporting requirements.

Article 24 MISCELLANEOUS

24.1 Taxes

DB Team shall pay, prior to delinquency, all applicable Taxes. DB Team shall have no right to a Compensation Event or a Relief Event due to its misinterpretation of Laws respecting Taxes or incorrect assumptions regarding applicability of Taxes.

24.2 Amendments

The DB Documents may be amended only by a written instrument duly executed by the Parties or their respective successors or assigns, except to the extent expressly provided otherwise in this Agreement.

24.3 Waiver

24.3.1 No waiver of any term, covenant or condition of this Agreement or the other DB Documents shall be valid unless in writing and signed by the obligee Party.

24.3.2 The exercise by a Party of any right or remedy provided under this Agreement or the other DB Documents shall not waive or preclude any other or further

exercise thereof or the exercise of any other right or remedy. No waiver by any Party of any right or remedy under this Agreement or the other DB Documents shall be deemed to be a waiver of any other or subsequent right or remedy under this Agreement or the other DB Documents. The consent by one Party to any act by the other Party requiring such consent shall not be deemed to render unnecessary the obtaining of consent to any subsequent act for which consent is required, regardless of whether similar to the act for which consent is given.

24.3.3 Except as provided otherwise in the DB Documents, no act, delay or omission done, suffered or permitted by one Party or its agents shall be deemed to waive, exhaust or impair any right, remedy or power of such Party hereunder, or to relieve the other Party from the full performance of its obligations under this Agreement or the other DB Documents.

24.3.4 Either Party's waiver of any breach or failure to enforce any of the terms, covenants, conditions or other provisions of the DB Documents at any time shall not in any way limit or waive that Party's right thereafter to enforce or compel strict compliance with every term, covenant, condition or other provision, any course of dealing or custom of the trade notwithstanding. Furthermore, if the Parties make and implement any interpretation of the DB Documents without documenting such interpretation by an instrument in writing signed by both Parties, such interpretation and implementation thereof will not be binding in the event of any future Disputes.

24.3.5 Subject to Article 14.2.7, the acceptance of any payment or reimbursement by a Party shall not waive any preceding or then-existing breach or default by the other Party of any term, covenant or condition of this Agreement or the other DB Documents, other than the other Party's prior failure to pay the particular amount or part thereof so accepted, regardless of the paid party's knowledge of such preceding or then-existing breach or default at the time of acceptance of such payment or reimbursement. Nor shall such acceptance continue, extend or affect: (a) the service of any notice, any Disputes or final judgment; (b) any time within which the other Party is required to perform any obligation; or (c) any other notice or demand.

24.4 Independent Contractor

24.4.1 DB Team is an independent contractor, and nothing contained in the DB Documents shall be construed as constituting any relationship with GDOT other than that of an independent contractor under this Agreement.

24.4.2 Nothing in the DB Documents is intended or shall be construed to create any partnership, joint venture or similar relationship between GDOT and DB Team; and in no event shall either Party take a position in any tax return or other writing of any kind that a partnership, joint venture or similar relationship exists. While the term "public-private partnership" may be used on occasion to refer to contractual relationships of the type hereby created, the Parties do not thereby express any intention to form or hold themselves out as a *de jure* or *de facto* partnership, joint venture or similar relationship, to share net profits or net losses, or to give GDOT control or joint control over DB Team's financial decisions or discretionary actions concerning the Project and Work.

24.4.3 In no event shall the relationship between GDOT and DB Team be construed as creating any relationship whatsoever between GDOT and DB Team's employees. Neither DB Team nor any of its employees is or shall be deemed to be an employee of GDOT. Except as otherwise specified in the DB Documents, DB Team has sole authority and responsibility to employ, discharge and otherwise control its employees and has complete and sole responsibility as a principal for its agents, for all Contractors and for all other Persons that DB Team or any Contractor hires to perform or assist in performing the Work.

24.5 Successors and Assigns

The DB Documents shall be binding upon and inure to the benefit of GDOT and DB Team and their permitted successors, assigns and legal representatives.

24.6 Designation of Representatives; Cooperation with Representatives

24.6.1 GDOT and DB Team shall each designate an individual or individuals who shall be authorized to make decisions and bind the Parties on matters relating to the DB Documents ("Authorized Representative"). In addition, for purposes of Project administration and oversight to be performed by GDOT as provided in this Agreement, GDOT shall designate an individual or individuals who shall be authorized to make decisions and bind GDOT and upon such person(s) direction DB Team may rely. Exhibit 22 provides the initial Authorized Representative designations. A Party may change such designations by a subsequent writing delivered to the other Party in accordance with Article 24.11. For purposes of this Agreement, the Parties, except where expressly stated to the contrary, all communications and deliveries, including submittals, shall be through the respective Authorized Representative for each party.

24.6.2 DB Team shall cooperate with GDOT and all representatives of GDOT designated as described above.

24.7 Survival

DB Team's and GDOT's representations, covenants, warranties, the dispute resolution provisions contained in Article 17.7, the express obligations of the Parties following termination, and all other provisions which by their inherent character should survive expiration or earlier termination of this Agreement and/or completion of the Work shall survive the expiration or earlier termination of this Agreement and/or the completion of the Work. The provisions of Article 17.7 shall continue to apply after expiration or earlier termination of this Agreement to all Disputes between the parties arising out of the DB Documents.

24.8 Limitation on Third-Party Beneficiaries

24.8.1 It is not intended by any of the provisions of the DB Documents to create any third-party beneficiary hereunder or to authorize anyone not a Party hereto to maintain a suit for personal injury or property damage pursuant to the terms or provisions hereof, except to the extent provided in Article 24.9.2 and other specific provisions (such as the warranty and indemnity provisions) that identify third parties and state that they are entitled to benefits hereunder. Except as otherwise provided in this Article 24.8, the duties, obligations and responsibilities of the Parties to the DB Documents with respect to third parties shall remain as imposed by Law. The DB

Documents shall not be construed to create a contractual relationship of any kind between GDOT and a Contractor or any Person other than DB Team.

24.8.2 GDOT shall be a third-party beneficiary, and entitled to the benefits, with respect to the rights under the DB Documents related to the following:

24.8.2.1 Oversight, review, inspection, testing, monitoring, acceptance, and enforcement of DB Team's obligations to perform the design and construction of the Project in accordance with the DB Documents and applicable Law.

24.8.2.2 Review, audit, inspection and copying of data, information, documents, books and records of DB Team and any other DB Team-Related Entity.

24.8.2.3 Step in rights upon the occurrence of a DB Team Default.

24.9 No Personal Liability of GDOT Employees; No Tort Liability

24.9.1 GDOT's officers, employees, representatives are acting solely as agents and representatives of such respective entities, as applicable, when carrying out the provisions of or exercising the power or authority granted to them under this Agreement and the DB Documents. They shall not be liable either personally or as employees of GDOT for actions in their ordinary course of employment.

24.9.2 The Parties agree to provide to each other with written notice of any claim which such Party may receive from any third party relating in any way to the matters addressed in this Agreement, and shall otherwise provide notice in such form and within such period as is required by Law.

24.10 Governing Law

The DB Documents shall be governed by and construed in accordance with the laws of the State of Georgia.

24.11 Notices and Communications

24.11.1 Notices under the DB Documents shall be in writing and: (a) delivered personally; (b) sent by certified mail, return receipt requested; (c) sent by a recognized overnight mail or courier service, with delivery receipt requested, or (d) sent by facsimile or email communication followed by a hard copy and with receipt confirmed by telephone, to the following addresses (or to such other address as may from time to time be specified in writing by such Person):

24.11.2 All notices, correspondence and other communications to DB Team shall be delivered to the following address or as otherwise directed by DB Team's Authorized Representative:

_____
_____
_____

Telephone: _____
Facsimile: _____
E-mail: _____

24.11.3 All notices, correspondence, submittals, transmittals and any other communications shall be directed to GDOT's Authorized Representative. All notices, correspondence, submittals, transmittals, and other communications to GDOT shall be marked as regarding the "SR 53 Westbound at Chattahoochee River Bridge Replacement Project" and shall be delivered to the following addresses or as otherwise directed by GDOT's Authorized Representative:

Darryl D. VanMeter, P.E.
Georgia Department of Transportation
Office of Innovative Delivery
600 West Peachtree Street, Floor 19
Atlanta, Georgia 30308
E-mail: dvanmeter@dot.ga.gov

In addition, copies of all notices regarding Disputes, and termination and default notices shall be delivered to the following person:

Georgia Department of Transportation
Office of General Counsel
600 West Peachtree Street, Suite 2300
Atlanta, Georgia 30308
E-mail: mcline@dot.ga.gov

24.11.4 Notices shall be deemed received when actually received in the office of the addressee (or by the addressee if personally delivered) or when delivery is refused, as shown on the receipt of the U.S. Postal Service, private carrier or other Person making the delivery. Notwithstanding the foregoing, notices sent by facsimile after 12:00 p.m. Eastern Standard or Daylight Time (as applicable) and all other notices received after 12:00 p.m. shall be deemed received on the first Business Day following delivery (that is, in order for a fax to be deemed received on the same day, at least the first page of the fax must have been received before 12:00 p.m.). Any technical or other communications pertaining to the Work shall be conducted by DB Team's Authorized Representative and technical representatives designated by GDOT.

24.12 Integration of DB Documents

GDOT and DB Team agree and expressly intend that, subject to Article 24.13, this Agreement, and other DB Documents constitute a single, non-severable, integrated agreement whose terms are interdependent and non-divisible.

24.13 Severability

24.13.1 If any clause, provision, section or part of this Agreement or the other DB Documents or any other Principal Project Document is ruled invalid (including invalid due to Change in Law) by a court having proper jurisdiction, then the Parties shall: (a) promptly meet and negotiate a substitute for such clause, provision, section, or part, which shall, to the greatest extent legally permissible, effect the original intent of the

Parties; and (b) if necessary or desirable, apply to the court or other decision maker (as applicable) which declared such invalidity for an interpretation of the invalidated portion to guide the negotiations. The invalidity or unenforceability of any such clause, provision, section, or part shall not affect the validity or enforceability of the balance of the DB Documents or such other Principal Project Documents, which shall be construed and enforced as if the DB Documents or such other Principal Project Documents did not contain such invalid or unenforceable clause, provision, section, or part.

24.13.2 If after the efforts required by Article 24.13.1, the Parties mutually agree that without the section or part of the DB Documents or such other Principal Project Documents that the court ruled to be invalid, there is no interpretation or reformation of the DB Documents or such other Principal Project Documents that can reasonably be adopted which will return the Parties to the benefits of their original bargain, the Parties can mutually agree to treat the court order as a Termination by Court Ruling pursuant to Article 19.11.

24.14 Usury Savings

The DB Documents are subject to the express condition that at no time shall either Party be obligated or required to pay interest on any amount due the other Party at a rate which could subject the other Party to either civil or criminal liability as a result of being in excess of the maximum non-usurious interest rate permitted by Georgia Law (the "maximum legal rate"), if any. If, by the terms of the DB Documents either Party at any time is obligated to pay interest on any amount due in excess of the maximum legal rate, then such interest shall be deemed to be immediately reduced to the maximum legal rate and all previous payments in excess of the maximum legal rate shall be deemed to have been payments in reduction of the principal amount due and not on account of the interest due. All sums paid or agreed to be paid to a Party for the use, forbearance, or detention of the sums due that Party under the DB Documents shall, to the extent permitted by applicable Georgia Law, be amortized, prorated, allocated, and spread throughout the full period over which the interest accrues until payment in full so that the rate or amount of interest on account of the amount due does not exceed the maximum legal rate in effect from time to time during such period. If after the foregoing adjustments a Party still holds interest payments in excess of the maximum legal rate, it shall promptly refund the excess to the other Party.

24.15 Boycott of Israel

Pursuant to O.C.G.A. Sec. 50-5-85, DB Team certifies that it is not currently engaged in, and agrees that for the duration of the Project, it will not engage in a boycott of Israel.

24.16 Entire Agreement

This Agreement and the other DB Documents contain the entire understanding of the Parties with respect to the subject matter thereof and supersede all prior agreements, understandings, statements, representations and negotiations between the Parties with respect to their subject matter.

24.17 Counterparts

This instrument may be executed in two or more counterparts, each of which shall be deemed an original, but all of which together shall constitute one and the same instrument.

CONTRACT IDENTIFICATION NUMBER [XXXX]	DATE CONTRACT EXECUTED Date
PROJECT NUMBER(S) 0010212	COUNTY(IES) Hall County
CONTRACTOR [DB Team Name]	
DESCRIPTION OF IMPROVEMENTS AND FACILITY SR 53 Westbound at Chattahoochee River Bridge Replacement Project	
CONTRACT SUM $	

[Signature Page Immediately Follows]

IN WITNESS WHEREOF, the Parties intending to be legally bound, have set their hands and affixed their seals, and have executed this Agreement, including the requirements of the DB Documents, as of the date first above written.

[DB TEAM]	GEORGIA DEPARTMENT OF TRANSPORTATION
By:_____	By:_____
Name: _____	Name: Russell R. McMurry, PE
Title: _____	Title: Commissioner
By:_____	Attested By:_____
Name: _____	Name: Angela O. Whitworth
Title: _____	Title: Treasurer

EXHIBIT 1

ACRONYMS AND DEFINITIONS

Unless otherwise specified, wherever the following abbreviations or terms are used in this Agreement and the Technical Provisions, they have the meanings set forth below:

AASHTO	American Association of State Highway and Transportation Officials
ADA	Americans with Disabilities Act
AGC	Associated General Contractors of America
AMRL	AASHTO Materials Reference Laboratory
ANSI	American National Standards Institute
APE	Area of Potential Effects
ARC	Atlanta Regional Commission
AREMA	American Railway Engineering and Maintenance of Way Association
ASTM	American Society of Testing and Materials
ATC	Alternative Technical Concept
BFI	Bridge Foundation Investigation
AWS	American Welders Society
BMP	Best Management Practice
CAD	Computer Aided Design
CAPWAP	Case Pile Wave Analysis program
CCTV	Closed Circuit Television
CE	Categorical Exclusion
CEI	Construction Engineering and Inspection
CEPP	Comprehensive Environmental Protection Plan
CFR	Code of Federal Regulations
CIA	Contract Item Agreement
CMS	Changeable Message Sign
CPI	Consumer Price Index
CQAM	Construction Quality Assurance Manager
CQMP	Construction Quality Management Plan
CSJ	Control Section Job
CWA	Clean Water Act
DB	Design-Build
DBA	Design-Build Agreement
DBE	Disadvantaged Business Enterprise, as set forth in 49 CFR Part 26
DEIS	Draft Environmental Impact Statement
DMS	Dynamic Message Signs
DNR	Georgia Department of Natural Resources
DQAM	Design Quality Assurance Manager
DQMP	Design Quality Management Plan

DSS	Decent, Safe and Sanitary
EA	Environmental Assessment
ECM	Environmental Compliance Manager
EDG	GDOT Electronic Data Guidelines
EP	Extraction Procedure (toxicity)
EPA	Environmental Protection Agency
EPD	Georgia Department of Natural Resources, Environmental Protection Division
EPIC	Environmental Permits Issues and Commitments
ESA	Endangered Species Act of 1973, 16 U.S.C. §§ 1531 *et seq.*, as amended from time to time
EUC	Emergency Utility Coordinator
FAA	Federal Aviation Administration
FAPG	Federal-Aid Policy Guide
FEMA	Federal Emergency Management Agency
FHWA	U.S. Federal Highway Administration
FEIS	Final Environmental Impact Statement
FONSI	Finding of No Significant Impact
FTP	File Transfer Protocol
FWCA	Fish and Wildlife Coordination Act, 16 U.S.C. §§661 *et seq*., as amended from time to time
GDOT	Georgia Department of Transportation
GEPA	Georgia Environmental Policy Act, Section 12-16-1, et seq. of the Official Code of Georgia Annotated
GIS	Geographical Information System
HEC-FFA	Hydraulic Engineering Circular – Flood Frequency Analysis
HCR	Highway Conditions Report
ICD	Interface Control Document
ID	Form of Identification
IH	Interstate Highway
IRI	International Roughness Index
ISO	International Organization for Standardization
ITS	Intelligent Transportation System
IVHS	Intelligent Vehicle Highway System
IWP	Investigative Work Plan
MDS	Microwave Detection System
MOA	Memorandum of Agreement
MOT	Maintenance of Traffic
MOU	Memorandum of Understanding
MPH	Miles Per Hour
MPO	Metropolitan Planning Organization
MS4	Municipal Separate Storm Sewer System

MSDS	Materials Safety Data Sheets
MSE	Mechanically Stabilized Earth
MUTCD	Manual of Traffic Control Devices
NAVD	North American Vertical Datum
NBIS	National Bridge Inspection Standards
NCHRP	National Cooperative Highway Research Program
NCR	Nonconformance Report
NEPA	National Environmental Policy Act, 42 U.S.C. § 4321 *et seq*., as amended from time to time
NFIP	National Flood Insurance Program
NMFS	National Marine Fisheries Service
NOI	Notice of Intent
NOAA	National Oceanic and Atmospheric Administration
NOT	Notice of Termination
NPDES	National Pollutant Discharge Elimination System
NRCS	Natural Resource Conservation Service
NRHP	National Register of Historic Places
NTP	Notice to Proceed
NTAS	National Terrorism Advisory System
OCGA	Official Code of Georgia Annotated
OCR	Optical Character Recognition
OSAH	Georgia Office of State Administrative Hearings
OSHA	Occupational Safety and Health Administration
OVF	Owner Verification Firm
PA	Programmatic Agreement
PACES	Pavement Condition Evaluation System
PDP	GDOT Plan Development Process
PIC	Public Information Coordinator or Public Information Contact, depending on context
PICP	Public Information and Communications Plan
PLS (or RPLS)	Professional Land Surveyor
PMC	Program Management Consultant
PMCS	Project Management Controls System
PMP	Project Management Plan
PPE	Personal Protection Equipment
PQMP	Project Quality Management Plan
PUA	Possession and Use Agreement
QA	Quality Assurance
QC	Quality Control
QMP	Quality Management Plan
RCP	Reinforced Concrete Pipe

RFC	Release for Construction
RFI	Request for Information
RFQ	Request for Qualifications
RFP	Request for Proposals
RLM	Residual Life Methodology
ROD	Record of Decision
ROW	Right of Way
ROW AM	Right of Way Acquisition Manager
ROWIS	Right of Way Information System
RTF	Related Transportation Facilities
SDPP	Special Deposit and Possession Procedure
SDEIS	Supplemental Draft Environmental Impact Statement
SH	State Highway
SHPO	State Historic Preservation Officer
SME	Subject Matter Expert
SOQ	Statement of Qualifications
SOV	Schedule of Values
SSTR	Single Slope Traffic Railing
STA	State Transportation Agency
SUA	Standard Utility Agreement
SUE	Subsurface Utility Engineering
TCLP	Toxicity Characteristic Leaching Procedure
TIR	Traffic Interruption Request
TMC	Traffic Management Center
TMP	Transportation Management Plan
UAM	Utility Accommodation Manual
UAT	Utility Adjustment Team
UCS	User Classification Subsystem
UDC	Utility Design Coordinator
UJUA	Utility Joint Use Acknowledgment or Utility Joint Use Agreement
UM	Utility Manager
US	United States
USACE	United States Army Corps of Engineers
U.S. DOT	United States Department of Transportation
USFWS	United States Fish and Wildlife Service
U.S. GAAP	U.S. Generally Accepted Accounting Principles
USPAP	Uniform Standard of Professional Appraisal Practices
UST	Underground Storage Tank
UTM	Universal Transverse Mercator
VDS	Video Detection System
VES	Video Exception Sub-system

WBS	Work Breakdown Structure
WFI	Wall Foundation Investigation
WECS	Worksite Erosion Control Supervisor
WTCS	Worksite Traffic Control Supervisor
WUCS	Worksite Utility Coordination Supervisor

Abandonment means that Design-Build Team abandons all or a material part of the Project, which abandonment shall have occurred if (a) Design-Build Team demonstrates through acts or omissions an intent not to continue, for any reason other than a Relief Event that materially interferes with ability to continue, to construct or operate all or a material part of the Project and (b) no significant Work (taking into account the Project Schedule, if applicable, and any Relief Event) on the Project or a material part thereof is performed for a continuous period of more than 45 days.

Addenda/Addendum/Amendment means supplemental additions, deletions, and modifications to the provisions of the RFP after the release of the draft RFP.

Adjust means to perform a Utility Adjustment.

Adjustment means a Utility Adjustment.

Adjustment Standards means the standard specifications, standards of practice, and construction methods that a Utility Owner customarily applies to facilities (comparable to those being Adjusted on account of the Project) constructed by the Utility Owner (or for the Utility Owner by its contractors), at its own expense. Unless the context requires otherwise, references in the DB Documents to a Utility Owner's "applicable Adjustment Standards" refer to those that are applicable pursuant to Article 7.5.3 of the Agreement.

Administrative Information Submittals means those submittals Proposers are required to submit with their respective Proposal.

Affidavit of Property Interest means the form of documentation of Existing Utility Property Interests described in Section 6.2.2 of the Technical Provisions.

Affiliate means:

(a) any shareholder, member, partner or joint venture member of Design-Build Team,

(b) any Person which directly or indirectly through one or more intermediaries' controls, or is controlled by, or is under common control with, Design-Build Team or any of its shareholders, members, partners or joint venture members; and

(c) any Person for which ten percent (10%) or more of the equity interest in such Person is held directly or indirectly, beneficially or of record by (i) Design-Build Team, (ii) any of Design-Build Team's shareholders, members, partners or joint venture members or (iii) any Affiliate of Design-Build Team under clause (b) of this definition.

For purposes of this definition the term "control" means the possession, directly or indirectly, of the power to cause the direction of the management of a Person, whether through voting securities, by contract, family relationship or otherwise.

Age means the elapsed time since an Element was first constructed or installed or, if applicable, last reconstructed, rehabilitated, restored, renewed or replaced.

Agreement, **DBA**, **Design-Build Agreement**, or **DB Agreement** means this certain Design-Build Agreement executed by GDOT and Design-Build Team, including any and all exhibits, attachments, riders, and amendments thereto.

Allowable Design Exceptions means design exceptions identified in Section 11.3.2 of the Technical Provisions that are allowed to be implemented on the Project.

Alternative Technical Concept (ATC) means an alternative technical concept proposed by Design-Build Team pursuant to the terms set forth in the RFP.

Apparent Successful Proposer means the Proposer with the apparent Successful Proposal, taking into consideration the evaluation criteria and procedures.

Area of Potential Effects (APE) means the geographic area or areas within which an undertaking may directly or indirectly cause alterations in the character or use of Historic Properties, if such properties exist.

Attorney General means the Attorney General of the State of Georgia.

Authorized Representative has the meaning set forth in Article 24.6.1 of the Agreement, and shall be applicable person(s) and/or party(ies) authorized to act on behalf of GDOT and the Design-Build Team respectively, as initially set forth pursuant to Exhibit 22 of the Agreement. All notices, deliveries, responses, approvals, and other communications among GDOT and/or the Design-Build Team shall be directed to the respective Authorized Representative for each of the aforementioned, unless expressly provided to the contrary in this Agreement.

Baseline Project Schedule shall have the meaning set forth in Section 2.5 of the Technical Provisions.

Best Management Practices (BMP) has the meaning set forth in *Storm Water Management for Construction Activities: Developing Pollution Prevention Plans and Best Management Practices* (EPA Document 832 R 92-005).

Best Value Proposal means the Proposal meeting the standards set by the RFP that GDOT determines, through the evaluation process and evaluation criteria described in this ITP, to present the best value and to be in the best interest of GDOT and the State.

Betterment has, with respect to a given Utility being Adjusted, the meaning (if any) set forth in the Utility Agreement(s) applicable to the Utility; in all other cases, "Betterment" means any upgrading of the Utility in the course of such Utility Adjustment that is not attributable to the construction of the Project and is made solely for the benefit of and at the election of the Utility Owner, including an increase in the capacity, capability, efficiency or function of an Adjusted Utility over that which was provided by the existing Utility. Notwithstanding the foregoing, the following are not considered Betterments unless otherwise provided in the applicable Utility Agreement(s):

(a) any upgrading which is required for accommodation of the Project;

(b) replacement devices or materials that are of equivalent standards although not identical;

(c) replacement of devices or materials no longer regularly manufactured with an equivalent or next higher grade or size;

(d) any upgrading required by applicable Law;

(e) replacement devices or materials that are used for reasons of economy (e.g., non-stocked items may be uneconomical to purchase); and

(f) any upgrading required by the Utility Owner's applicable Adjustment Standards.

With respect to any Replacement Utility Property Interest, "**Betterment**" has the meaning (if any) set forth in the applicable Utility Agreement(s). In all other cases, a Replacement Utility Property Interest shall be considered a Betterment, except to the extent that reinstallation of a Utility in the Replacement Utility Property Interest (i) is necessary in order to meet the requirements of the DB Documents, or (ii) is called for by Design-Build Team in the interest of overall economy for the Project.

Business Day, work day, or working day means any Calendar Day less Saturday, Sunday and State of Georgia holidays.

Calendar Day means any day shown on the calendar, beginning and ending at midnight.

Change in Law means (a) the adoption of any Law after the date that is 90 days prior to the Proposal Due Date, or (b) any change, amendment to, repeal or revocation of any Law or in the interpretation or application thereof by any Governmental Entity after the date that is 90 days prior to the Proposal Due Date, in each case that is materially inconsistent with Laws in effect 90 days prior to the Proposal Due Date; excluding, however, any such Change in or new Law that also constitutes or causes a change in or new Adjustment Standards, as well as any change in or new Law passed or adopted but not yet effective as of the date that is 90 days prior to the Proposal Due Date.

Change of Control means any assignment, sale, financing, grant of security interest, transfer of interest or other transaction of any type or description, including by or through voting securities, asset transfer, contract, merger, acquisition, succession, dissolution, liquidation or otherwise, that results, directly or indirectly, in a change in possession of the power to direct or control or cause the direction or control of the management of Design-Build Team or a material aspect of its business. A change in the power to direct or control or cause the direction or control of the management of a shareholder, member, partner or joint venture member of Design-Build Team may constitute a Change of Control of Design-Build Team if such shareholder, member, partner or joint venture member possesses the power to direct or control or cause the direction or control of the management of Design-Build Team. Notwithstanding the foregoing, the following shall not constitute a Change of Control:

(a) A change in possession of the power to direct or control the management of Design-Build Team or a material aspect of its business due solely to a bona fide open market transaction(s) in securities effected on a recognized public stock exchange, including such transactions involving an initial public offering;

(b) A change in possession of the power to direct or control the management of Design-Build Team or a material aspect of its business due solely to a bona fide transaction

involving beneficial interests in the ultimate parent organization of a shareholder, member, partner or joint venture member of Design-Build Team, (but not if the shareholder, member, partner or joint venture member is the ultimate parent organization), unless the transferee in such transaction is at the time of the transaction suspended or debarred or subject to a proceeding to suspend or debar from bidding, proposing or contracting with any federal or State department or agency;

(c) An upstream reorganization or transfer of direct or indirect interests in Design-Build Team so long as there occurs no change in the entity with ultimate power to direct or control or cause the direction or control of the management of Design-Build Team;

(d) A transfer of interests between managed funds that are under common ownership or control other than a change in the management or control of a fund that manages or controls Design-Build Team;

(e) The exercise of minority veto or voting rights (whether provided by applicable Law, by Design-Build Team's organizational documents or by related member or shareholder agreements or similar agreements) over major business decisions of Design-Build Team, provided that if such minority veto or voting rights are provided by shareholder or similar agreements, GDOT has received copies of such agreements; or

Change Order means a written approval by GDOT, counter-signed by Design-Build Team, with respect to a GDOT Change or Change Request, which shall set forth any adjustments to the Contract Sum and/or the Contract Time, including on account of a Relief Event or Compensation Event, as provided in the Agreement.

Change Request means a written request from Design-Build Team seeking to change the character, quantity, quality, description, scope or location of any part of the Work, to modify the DB Documents.

Chief Executive Officer of the Design-Build Team means the chief executive officer, president or other senior officer of the Design-Build Team, or the governing body of Design-Build Team, in each case having authority to negotiate and resolve a Dispute with the Commissioner and bind Design-Build Team by his or her decision in regard to such Dispute.

Claimant means any Person that would be entitled to protection of payment bond under Code Section 13-10-63, including any P&P Bonds.

Code means the Official Code of Georgia Annotated.

Commissioner means the Commissioner of GDOT appointed by the State Transportation Board and any successor thereto having substantially similar powers and authority.

Communications Support Plan has the meaning set forth in Section 2.2.3 of the Technical Provisions.

Compensation Amount means the amount of compensation to be paid to Design-Build Team for a Compensation Event as set forth and subject to the limitations of the Agreement, including Article 14.2 therein.

Compensation Event means the written notice submitted by Design-Build Team in accordance with Article 14.2 of the Agreement.

Compensation Event Notice means the written notice submitted by Design-Build Team in accordance with Article 13.3.2 of the Agreement.

Completion Date means the date the Design-Build Team has satisfied all conditions and requirements of and for a Completion Deadline, including Interim Completion Deadlines, the Substantial Completion Deadline, and Final Acceptance, as may be adjusted pursuant to any Supplemental Agreement, including on account of any Relief Events.

Completion Deadline means the critical milestones for commencement or completion of the Work as set forth in Exhibit 9 to the Agreement, including without limitation Interim Completion Deadlines, the Substantial Completion Deadline, and Final Acceptance Deadline, as may be adjusted upon approval of the Baseline Project Schedule as set forth in Article 3.2 of the Agreement, and as further adjusted pursuant to any Supplemental Agreement, including on account of any Relief Events.

Conceptual Layout Plan means the schematic layout which provides alignment and lane configuration information necessary to verify lane continuity and general scope compliance for the entire Project.

Construction Commencement Date means for the date on which Design-Build Team first commences construction of the Project or such relative phase thereof.

Construction Documents means all shop drawings, working drawings, fabrication plans, material and hardware descriptions, specifications, construction quality control reports, construction quality assurance reports and samples necessary or desirable for construction of the Project and/or the Utility Adjustments included in the Construction Work, in accordance with the DB Documents.

Construction Maintenance Limits Plan means the deliverable to identify the physical boundaries of Design-Build Team's maintenance responsibilities for the Construction Work.

Construction Phase has the meaning set forth in Section 2.2.4 of the Technical Provisions.

Construction Phasing and Staging Plan has the meaning set forth in Section 2.2.4 of the Technical Provisions.

Construction Work means all portions of the Work necessary to build or construct, make, form, manufacture, furnish, install, supply, deliver or equip the Project and/or the Utility Adjustments. Construction Work includes landscaping.

Contract means any agreement, and any supplement or amendment thereto, by either (a) Design-Build Team with any other Person or Contractor, or (b) any Contractor with any Person or Subcontractor, to perform any part of the Work or provide any materials, equipment or supplies for any part of the Work, or any such agreement, supplement or amendment at a lower tier, between a Subcontractor and its lower tier sub-subcontractor or supplier. The term "Contract" excludes Utility Agreements and any agreement with GDOT.

Contract Item Agreement (CIA) means an Agreement used for including Utility work in the Department's project and performed by the Department's Contractor awarded by competitive bid.

Contract Sum means the total contract sum to be paid to Design-Build Team on account of the fully and properly performed Work as set forth in the Agreement (preceding signatures under Article 24), as adjusted pursuant to Supplemental Agreements (including to reflect adjustments for Compensation Events or Change Orders as provided in the Agreement), including without limitation all of Design-Build Team's profit, fees, financing costs and interest expense for Design-Build Team Debt, all costs of work and services, materials, equipment, supplies, general conditions costs, overhead and administrative expenses, professional fees and subconsultant costs, acquisition and other costs associated with acquisition of any Approved Properties, insurance and bond premiums, sales taxes, assessments, tariffs, permit, license and registration fees, and all other related costs and expenses.

Contract Time means the time period provided for Design-Build Team's completion of the Work as provided in Article 3.3.1 of the Agreement.

Contractor means any Person, including any Subcontractor with whom Design-Build Team has entered into any Contract to perform any part of the Work or provide any materials, equipment or supplies for the Project and/or the Utility Adjustments included in the Construction Work, on behalf of Design-Build Team. The term "Contractor" excludes GDOT.

Cost to Cure means an appraisal method applied to estimate a proper adjustment for damages to a property that can be physically and economically corrected, as described in further detail in the GDOT ROW Manual.

Critical Path means the sequence of activities that must be completed on schedule for the entire Project to be completed in accordance with the Milestone Deadlines. This is the longest duration path through the work plan, in terms of time, of logically connected activities on the Baseline Project Schedule ending with the relative Milestone Deadline in respect thereof.

Customer Groups means groups, Persons and entities having a perceived stake or interest in the Project, including: the media, elected officials, Governmental Entities, general public residing or working within the general vicinity of the Project or traveling within or across the limits of the Project, business owners within or adjacent to the Project corridor, Utility Owners, railroads, transportation authorities and providers, community groups, local groups (neighborhood associations, business groups, chambers of commerce, convention and visitors bureaus, contractors, etc.) and other Persons or entities affected by the Project.

Day or **day** means calendar day unless otherwise expressly specified.

DBE Commitments List means Design-Build Team's commitment for meeting the Disadvantaged Business Enterprises (DBE) participation goals set forth in Article 10.9.2 of the Agreement and Exhibit 14 to the Agreement.

Decent, Safe and Sanitary (DSS) means the condition of a dwelling such that it meets applicable housing and occupancy codes.

Default Interest Rate means the statutory interest rate applicable to GDOT for contract payment defaults.

Default Termination Event means each of the Design-Build Team Defaults listed in Article 19.3.1 of the Agreement.

Defect means any Work that does not otherwise conform with the DB Documents, or otherwise is a defect, whether by design, construction, installation, affecting the condition, use, functionality or operation of any portion of the Work which, ordinary wear and tear excepted, would cause or have the potential to cause one or more of the following:

(a) a hazard, nuisance or other risk to public or worker health or safety, including the health and safety of Users;

(b) a structural deterioration of the affected Element or any other part of the Project;

(c) damage to a third party's property or equipment;

(d) damage to the Environment;

(e) failure of the affected Element or any other part of the Project to meet a Performance Requirement; or

(f) failure of an Element to meet the Target for a measurement record as set forth in the columns headed "Target" and "Measurement Record" in the Performance and Measurement Table Baseline.

Design-Build Agreement, DB Agreement, DBA - see definition for Agreement.

Design-Build Documents or **DB Documents** means those documents as set forth in Article 1.2 of the Agreement and all such other agreements entered into by GDOT and Design-Build Team or any Design-Build Team-Related Entity, or otherwise executed by Design-Build Team or a Design-Build Team-Related Entity and delivered to GDOT, with respect to or in connection with this Agreement, including without limitation Supplemental Agreements.

Design-Build Period means the period commencing with NTP 1 and ending when Design-Build Team achieves Final Acceptance.

Design-Build Team or **DB Team** means the party identified as such in the opening paragraph of this Agreement, together with its permitted successors and assigns.

Design-Build Team Default or **DB Team Default** has the meaning set forth in Article 17.1.1 of the Agreement.

Design-Build Team's Interest or **DB Team's Interest** means all right, title, and interest of Design-Build Team in, to, under or derived from the Agreement and the other DB Documents.

Design-Build Team Proposed/ Design-Build Team Acquired Right of Way means Additional Properties; see Section 7 of the Technical Provisions.

Design-Build Team-Related Entities or **DB Team Team-Related Entities** means (a) Design-Build Team, (b) Design-Build Team's shareholders, partners, joint venture members and/or members, (c) the Contractor and all other Subcontractors (including Suppliers), (d) any other Persons performing any of the Work, (e) any other Persons for whom Design-Build Team

may be legally or contractually responsible, and (f) the employees, agents, officers, directors, shareholders, representatives, consultants, successors and assign of any of the foregoing; provided, however, that GDOT shall not be considered Design-Build Team-Related Entities.

Design-Build Team Release(s) of Hazardous Material or **DB Team Release(s) of Hazardous Material** means (a) Release(s) of Hazardous Material, or the exacerbation of any such release(s), attributable to the culpable actions, culpable omissions, negligence, willful misconduct, or breach of applicable Law or contract by any Design-Build Team-Related Entity; (b) Release(s) of Hazardous Materials arranged to be brought onto the Site or elsewhere by any Design-Build Team-Related Entity; regardless of cause, or (c) use, containment, storage, management, handling, transport and disposal of any Hazardous Materials by any Design-Build Team-Related Entity in violation of the requirements of the DB Documents or any applicable Law or Governmental Approval.

Design-Build Team Vehicle or **DB Team Vehicle** means any vehicle authorized by Design-Build Team performing construction, maintenance or operation of the Project, or other related activity.

Design Deviation means any deviation from criteria defined in the GDOT Design Policy Manual as a "guideline". Failure to adhere to the "10 Controlling Criteria" mandated by FHWA and/or the GDOT Standard Design Criteria mandated by GDOT does not qualify as a Design Deviation.

Design Documents means all drawings (including plans, profiles, cross-sections, notes, elevations, typical sections, details and diagrams), specifications, reports, studies, calculations, electronic files, records and submittals necessary for, or related to, the design of the Project and/or the Utility Adjustments included in the Design Work and/or the Construction Work.

Design Speed means the speed used to determine the various geometric design features of the roadway.

Design Work means all Work of design, engineering or architecture for the Project or Utility Adjustments.

Deviation means any proposed or actual change, deviation, modification, alteration or exception from this Agreement, the Technical Provisions, Technical Documents or Governmental Approvals.

Directive Letter means the letter described in Article 13.1 of the Agreement.

Disadvantaged Business Enterprise or **DBE** has the meaning set forth 49 CFR 23 and further described in Attachment 6 to Exhibit 8 to the Agreement.

Discipline Groups has the meaning set forth in Section 3.3.7.10 of the Technical Provisions.

Discriminatory or **Discriminatory Action** means (a) materially more onerous application to Design-Build Team or the Project of changes or additions to Technical Provisions or Technical Documents than the application thereof to other Comparable Limited Access Highways, or (b) selective application of changes or additions to Technical Provisions or Technical Documents to Design-Build Team or the Project and not to other Comparable Limited

Access Highways. Notwithstanding the foregoing, the following actions are not Discriminatory or Discriminatory Actions: (i) any such application in response to any act or omission by or on behalf of Design-Build Team in violation of Law or the DB Documents; (ii) Safety Compliance; (iii) any such application in response to a directive by the U.S. Department of Homeland Security or comparable State agency, unless such directive is directed solely at or solely affects the Project and such application requires specific changes in Design-Build Team's normal design, construction, operation or maintenance procedures in order to comply; and (iv) any other actions necessary to address potential safety concerns arising from a specific condition or feature peculiar to the Project.

Dispute means any claim, dispute, disagreement or controversy between GDOT and Design-Build Team concerning their respective rights and obligations under the DB Documents, including concerning any alleged breach or failure to perform and remedies.

Dispute Resolution Procedures means the procedures for resolving Disputes set forth in Article 17.7 of the Agreement.

Early Adjustment means a Utility identified as such in Section 6 of the Technical Provisions.

Early Portions of the Work means those usable portions of the Project, which should be opened so that they are contiguous; each of which must be completed within the Interim Completion Deadline identified in Exhibit 9 to the Agreement.

Early Termination Date means the effective date of termination of the Agreement for any reason prior to the stated expiration Final Acceptance Deadline, as specified in the relevant provisions of Article 19.

Effective Date means the date of the Agreement or such other date as shall be mutually agreed upon in writing by GDOT and Design-Build Team.

Element means an individual component, system or subsystem of the Work.

Emergency means an unforeseen event affecting the Project whether directly or indirectly which (a) causes or has the potential to cause disruption to the free flow of traffic on the Project or a threat to the safety of the public; (b) is an immediate or imminent threat to the long term integrity of any part of the infrastructure of the Project, to the Environment, to property adjacent to the Project or to the safety of Users or the traveling public; or (c) is recognized by the Georgia Department of Public Safety as an emergency.

Engineer of Record means a Professional Engineer as defined in this Exhibit 1 on the Design-Build Team who is responsible and liable for the adequacy and safety of the design. This individual will sign and seal the Released for Construction plans, as well as revisions on construction and shop drawings.

Environment means air, soils, surface waters, groundwater, land, stream sediments, surface or subsurface strata, biological resources, including endangered, threatened and sensitive species, natural systems, including ecosystems, and historic, archeological and paleontological resources.

Environmental Approvals (also Environmental Document Approvals) means all Governmental Approvals arising from or required by any Environmental Law in connection with development of the Project, including approvals and permits required under NEPA/GEPA.

Environmental Commitment (also Environmental Permits, Issues and Commitments) means an environmental requirement that must be fulfilled before, during or after construction. Environmental Commitments include commitments to avoid impacts in specified areas, complete environmental investigations before construction impacts, or to perform specified actions after completion of construction.

Environmental Documents means all required documents and submittals pertaining to either federal or state laws and permits which are necessary to complete the Project. This may include but not be limited to NEPA, GEPA, and/or other state and federal environmental laws.

Environmental Law means any Law applicable to the Project or the Work regulating or imposing liability or standards of conduct that pertains to the Environment, Hazardous Materials, contamination of any type whatsoever, or environmental health and safety matters, and any lawful requirements and standards that pertain to the Environment, Hazardous Materials, contamination of any type whatsoever, or environmental health and safety matters, set forth in any permits, licenses, approvals, plans, rules, regulations or ordinances adopted, or other criteria and guidelines promulgated, pursuant to Laws applicable to the Project or the Work, as such have been or are amended, modified, or supplemented from time to time (including any present and future amendments thereto and reauthorizations thereof) including those relating to:

(a) The manufacture, processing, use, distribution, existence, treatment, storage, disposal, generation, and transportation of Hazardous Materials;

(b) Air, soil, surface and subsurface strata, stream sediments, surface water, and groundwater;

(c) Releases of Hazardous Materials;

(d) Protection of wildlife, Threatened or Endangered Species, sensitive species, wetlands, water courses and water bodies, historical, archeological, and paleontological resources, vegetative buffers, and natural resources;

(e) The operation and closure of underground storage tanks;

(f) and safety of employees and other persons; and

(g) Notification, documentation, and record keeping requirements relating to the foregoing.

Without limiting the above, the term “Environmental Laws” shall also include the following:

(i) The National Environmental Policy Act (42 U.S.C. §§ 4321 *et seq.*), as amended;

(ii) The Georgia Environmental Policy Act (Section 12-16-1, et seq. of the Official Code of Georgia Annotated), as amended;

(iii) State species laws, including Georgia Endangered Wildlife Act and/or, Georgia Wildflower Preservation Act;

(iv) The Comprehensive Environmental Response, Compensation, and Liability Act (42 U.S.C. §§ 9601 *et seq.*), as amended;

(v) The Solid Waste Disposal Act, as amended by the Resource Conservation and Recovery Act (42 U.S.C. §§ 6901 *et seq.*);

(vi) The Emergency Planning and Community Right to Know Act of 1986 (42 U.S.C. §§ 11001 *et seq.*), as amended;

(vii) The Clean Air Act (42 U.S.C. §§ 7401 *et seq.*), as amended;

(viii) The Federal Water Pollution Control Act, as amended by the Clean Water Act (33 U.S.C. §§ 1251 *et seq.*);

(ix) The Resource Conservation and Recovery Act (42 U.S.C. §§ 6901, *et seq.*), as amended;

(x) The Toxic Substances Control Act (15 U.S.C. §§ 2601 *et seq.*), as amended;

(xi) The Hazardous Materials Transportation Act (49 U.S.C. §§ 1801 *et seq.*), as amended;

(xii) The Oil Pollution Act (33 U.S.C. §§ 2701, *et. seq.*), as amended;

(xiii) The Federal Insecticide, Fungicide and Rodenticide Act (7 U.S.C. §§ 136 *et seq.*), as amended;

(xiv) The Federal Safe Drinking Water Act (42 U.S.C. §§ 300 *et seq.*), as amended;

(xv) The Federal Radon and Indoor Air Quality Research Act (42 U.S.C. §§ 7401 *et seq.*), as amended;

(xvi) The Occupational Safety and Health Act (29 U.S.C. §§ 651 *et seq.*);

(xvii) The Endangered Species Act (16 U.S.C. §§ 1531 *et seq.*), as amended;

(xviii) The Fish and Wildlife Coordination Act (16 U.S.C. §§ 661 *et seq.*), as amended;

(xix) The National Historic Preservation Act (16 U.S.C. §§ 470 *et seq.*), as amended;

(xx) The Coastal Zone Management Act (33 U.S.C. §§ 1451 *et seq.*), as amended;

(xxi) Georgia Water Quality Act (O.C.G.A. § 12-5-20);

(xxii) Georgia Erosion and Sedimentation Act (O.C.G.A. § 12-7-1), as amended;

(xxiii) Best Management Practices (O.C.G.A. § 12-7-6(b)(15)); and

(xxiv) Georgia Underground Storage Act (O.C.G.A. § 12-13-1)).

Escrow Agent has the meaning set forth in Exhibit 24 of the Agreement.

Evaluation Score means the numerical score resulting from the adjectival evaluation and numerical conversion of a particular portion of the Proposals.

Exhibits means all exhibits, riders, and other attachments to the DB Documents, including without limitation Volume 1 and Volume 2, as well as, any of the aforementioned, which are incorporated into any DB Documents by reference, and all amendments, modifications, and supplements thereto.

Existing Improvements means the existing highway, bridge, and related improvements as of the date that are in effect at the date of the RFP advertisement within the Construction Maintenance Limits.

Existing Right of Way or **Existing ROW** means any real property (which term is inclusive of all estates and interests in real property), improvements and fixtures (i) as provided in Article 2.2 of the Agreement and more specifically described and identified as "Existing ROW" within Exhibit 4, in which GDOT has a leasehold estate and interest pursuant to the Estate for Years or other property right or interest, and (ii) any Proposed Right of Way, which GDOT at any time after the Effective Date, shall acquire a leasehold estate or other property interest. The term specifically includes all air space, surface rights and subsurface rights within the limits of the Existing Right of Way.

Existing Utility Property Interest means any right, title or interest in real property (e.g., a fee or an easement) claimed by a Utility Owner as the source of its right to maintain an existing Utility in such real property, which is compensable in eminent domain.

Federal Requirements means the provisions required to be part of federal-aid construction contracts, including the provisions set forth in Exhibit 8 to the Agreement.

Final Acceptance means the occurrence of all the events and satisfaction of all the conditions set forth in Article 7.7.2 of the Agreement, as and when confirmed by GDOT's issuance of a certificate in accordance with the procedures and within the timeframe established in Article 7.7.2 of the Agreement.

Final Acceptance Date means the date upon which Design-Build Team has satisfied all conditions of and for Final Acceptance and GDOT has certified same.

Final Acceptance Deadline means the deadline for achieving Final Acceptance, as set forth in Exhibit 9, as such deadline may be extended for any Relief Event or Change Order as and to extend provided in the Agreement.

Final Design shall have the meaning set forth in Article 3.3.1.2 of the Agreement.

Final Plans means the Design Documents which provide the complete and final documents necessary for the construction, operations, and maintenance of the Project or any portion thereof including any Utility Adjustments required by the Project.

Final ROW Lines means the final location of all Right of Way within the project limits.

Fiscal Year means the12-month fiscal year used by GDOT for budgeting purposes.

Float means the amount of time that any given activity or logically connected sequence of activities shown on the Project Schedule, as the case may be, may be delayed before it will affect completion of any Work as required to achieve any Milestone Deadlines, including the Substantial Completion Deadline and Final Acceptance Deadline.

Force Majeure Event means the occurrence of any of the following events that materially and adversely affects performance of Design-Build Team's obligations, provided that such events (or the effects of such events) could not have been avoided by the exercise of caution, due diligence, or reasonable efforts by Design-Build Team: (a) war (including civil war and revolution), invasion, armed conflict, violent act of foreign enemy, military or armed blockade, or military or armed takeover of the Project, in each case occurring within the State; (b) any act of terrorism or sabotage that causes direct physical damage to the Project; (c) nuclear explosion or contamination, in each case occurring within the State; (d) riot and civil commotion on or in the immediate vicinity of the Project; (e) fire, explosion, flood, earthquake, hurricane, or tornado, in each case that causes direct physical damage to the Project; or (f) national or statewide (i.e., State of Georgia) strike that has a direct adverse impact on Design-Build Team's ability to obtain materials, equipment or labor for the Project.

Formal Consultation means during Section 7 Consultation (Endangered Species Act) that a Federal agency determines, through a biological assessment or other review, that its action is likely to adversely affect a listed species.

GDOT means the Georgia Department of Transportation, as set forth in the recitals of the Agreement, and any entity succeeding to the powers, authorities and responsibilities of GDOT invoked by or under the DB Documents.

GDOT-Caused Delay means any of the following events, to the extent they result in a material delay or interruption in performance of any material obligation under the Agreement, and provided such events are beyond Design-Build Team's control and are not due to any act, omission, negligence, recklessness, willful misconduct, breach of contract or Law of any of the Design-Build Team-Related Entities, solely to the extent not concurrent or overlapping with any delay attributable to Design-Build Team, and further provided that such events (or the effects of such events) could not have been avoided by the exercise of caution, due diligence, or reasonable efforts by Design-Build Team, and with respect to any Compensation Event, solely to the extent that the cumulative effect of any such delays as set forth below have or shall result in delays, after taking into account any available Float, in excess of 90 days:

(a) Failure of GDOT to issue NTP 1 as provided pursuant to Article 3.3.1.1 of the Agreement and/or failure to issue NTP 2 or NTP 3 as provided pursuant to Article 3.3.1.2 and Article 3.3.1.3 of the Agreement;

(b) GDOT Changes;

(c) Failure of GDOT to provide the GDOT-Provided Approvals within the time periods set forth in Section 4.3.2 of the Technical Provisions, subject to Article 6.2.1 of the Agreement; or

(d) Failure of GDOT to provide responses to proposed schedules, plans, Design Documents, condemnation and acquisition packages, and other Submittals and matters submitted to GDOT after the Effective Date for which response is required under the DB Documents as an express prerequisite to Design-Build Team's right to proceed or act, within the

time periods (if any) indicated in the DB Documents, or if no time period is indicated, within a reasonable time, taking into consideration the nature, importance and complexity of the submittal or matter, following delivery of written notice from Design-Build Team requesting such action in accordance with the terms and requirements of the DB Documents;

(e) Failure of GDOT to provide Design-Build Team with access to the Right of Way as required; or

(f) The occurrence of a GDOT Release of Hazardous Materials.

Any proper suspension of Work pursuant to Article 17.3.7 of the Agreement shall not be considered a GDOT-Caused Delay.

GDOT Change means:

(a) Any change in the scope of the Work or terms and conditions of the Technical Provisions or Technical Documents (including changes in the standards applicable to the Work) that GDOT has directed Design-Build Team to perform through a Supplemental Agreement as described in Article 13 of the Agreement or a Directive Letter pursuant to Article 13.1 of the Agreement; and

(b) Any other event that the DB Documents expressly state shall be treated as a GDOT Change.

GDOT Claims Account means the designated account for the benefit of GDOT and Design-Build Team to be administered and maintained by GDOT for payments on account of claims as required by GDOT pursuant to Article 17.3.4 of the Agreement.

GDOT Default has the meaning set forth in Article 17.5.1 of the Agreement.

GDOT Recoverable Costs means:

(a) The costs of any assistance, action, activity or Work undertaken by GDOT which Design-Build Team is liable for or is to reimburse under the terms of the DB Documents, including the charges of third-party contractors, and reasonably allocated wages, salaries, compensation and overhead of GDOT staff and employees, performing such action, activity or Work (exclusive of ordinary and customary administration and review activities by GDOT employees or consultants, except for such consultant fees and expenses as expressly reserved in the Agreement); plus

(b) Third-party costs GDOT incurs to publicly procure any such third-party contractors; plus

(c) Reasonable fees and costs of attorneys (including the reasonably allocable fees and costs of the Georgia Attorney General's Office), financial advisors, engineers, architects, insurance brokers and advisors, investigators, traffic and revenue consultants, risk management consultants, other consultants, and expert witnesses, as well as court costs and other litigation costs, in connection with any such assistance, action, activity or Work, including in connection with defending claims by and resolving disputes with third-party contractors; plus

(d) Any expense or cost for which GDOT is to be reimbursed by Design-Build Team pursuant to the express terms of the Agreement; plus

(e) Interest on all the foregoing sums at the Default Interest Rate from the date due under the applicable terms of the DB Documents and continuing until paid.

GDOT Re-evaluation Period (Re-evaluation Period) means the specified amount of time set forth as a condition in an approved ATC for GDOT to obtain the applicable Governmental Approval required for a re-evaluation of the NEPA/GEPA Approval, prior to Design-Build Team being entitled to a Relief Event or Compensation Event; provided, however, that such time shall commence upon the date that GDOT has received a full and complete document package from Design-Build Team required for GDOT to process such re-evaluation.

GDOT Release(s) of Hazardous Materials means, except as provided below, the introduction in, on or under the Construction Maintenance Limits or Operation and Maintenance Limits of Hazardous Material directly by GDOT, and their respective agents and contractors (excluding Design-Build Team). GDOT Release(s) of Hazardous Material excludes, however, (i) any Hazardous Materials so introduced that are in or part of construction materials and equipment incorporated into the Project and (ii) any Hazardous Materials identified in the phase 1 investigation and report described in clause (i) of the definition of Pre-Existing Hazardous Materials.

GDOT Standard Specifications means the Georgia Department of Transportation Standard Specifications, Construction of Transportation Systems.

General Purpose Lanes means Limited Access Highway lanes within the Existing Right of Way other than the Managed Lanes.

Geotechnical Engineering Reports means the reports which meet the requirements described in Section 8.3 of the Technical Provisions.

GEPA means the Georgia Environmental Policy Act, as amended and as it may be amended from time to time.

GEPA Approval means the (a) GEPA document as approved by GDOT including any studies, reports, Environmental Commitments, and all other procedural requirements and documents required for the Project or a portion of the Project, as (b) may be modified pursuant to all Georgia EPD, USACE, USFWS approvals, and approved supplements and re-evaluations pertaining to the Project.

Good Industry Practice means the exercise of the degree of skill, diligence, prudence and foresight which would reasonably and ordinarily be expected from time to time from a skilled and experienced designer, engineer, or constructor, seeking in good faith to comply with its contractual obligations, complying with the DB Documents, all applicable Laws and Governmental Approvals, and engaged in the same type of undertaking in the United States under similar circumstances and conditions.

Governmental Approval means any permit, license, consent, concession, grant, franchise, authorization, waiver, variance or other approval, guidance, protocol, mitigation agreement, special provision, or memoranda of agreement/understanding, and any amendment or modification of any of them provided by Governmental Entities including State, local, or

federal regulatory agencies, agents, or employees, which authorize or pertain to the Project or the Work.

Governmental Entity means any federal, State or local government and any political subdivision or any governmental, quasi-governmental, judicial, public or statutory instrumentality, administrative agency, authority, body or entity other than GDOT.

Guarantor means any Person that is the obligor under any guaranty in favor of GDOT required under the Agreement, including any Design-Build Guaranty.

Hazardous Materials means any element, chemical, compound, material or substance, whether solid, liquid or gaseous, which at any time is defined, listed, classified or otherwise regulated in any way under any Environmental Laws, or any other such substances or conditions (including mold and other mycotoxins or fungi) which may create any unsafe or hazardous condition or pose any threat to human health and safety. "Hazardous Materials" includes the following:

(a) Hazardous wastes, hazardous material, hazardous substances, hazardous constituents, and toxic substances or related materials, whether solid, liquid, or gas, including substances defined as or included in the definition of "hazardous substance", "hazardous waste", "hazardous material", "extremely hazardous waste", "acutely hazardous waste", "radioactive waste", "radioactive materials", "bio-hazardous waste", "pollutant", "toxic pollutant", "contaminant", "restricted hazardous waste", "infectious waste", "toxic substance", "toxic waste", "toxic material", or any other term or expression intended to define, list or classify substances by reason of properties harmful to health, safety or the indoor or outdoor environment (including harmful properties such as ignitability, corrosivity, reactivity, carcinogenicity, toxicity, reproductive toxicity, "TCLP" toxicity" or "EP toxicity" or words of similar import under any applicable Environmental Laws);

(b) Any petroleum, including crude oil and any fraction thereof, and including any refined petroleum product or any additive thereto or fraction thereof or other petroleum derived substance; and any waste oil or waste petroleum byproduct or fraction thereof or additive thereto;

(c) Any drilling fluids, produced waters and other wastes associated with the exploration, development or production of crude oil, natural gas or geothermal resources;

(d) Any flammable substances or explosives;

(e) Any radioactive materials;

(f) Any asbestos or asbestos-containing materials;

(g) Any lead and lead-based paint;

(h) Any radon or radon gas;

(i) Any methane gas or similar gaseous materials;

(j) Any urea formaldehyde foam insulation;

(k) Electrical equipment which contains any oil or dielectric fluid containing regulated levels of polychlorinated biphenyls;

(l) Pesticides;

(m) Any other chemical, material or substance, exposure to which is prohibited, limited or regulated by any Governmental Entity or which may or could pose a hazard to the health and safety of the owners, operators, Users or any Persons in the vicinity of the Project or to the indoor or outdoor Environment; and

(n) Soil, or surface water or ground water, contaminated with Hazardous Materials as defined above.

Hazardous Materials Management means procedures, practices and activities to address and comply with Environmental Laws and Environmental Approvals with respect to Hazardous Materials encountered, impacted, caused by or occurring in connection with the Project or the Work, as well as investigation and remediation of such Hazardous Materials. Hazardous Materials Management may include sampling, stock-piling, storage, backfilling in place, asphalt batching, recycling, treatment, clean-up, remediation, transportation and/or off-site disposal of Hazardous Materials, whichever approach is effective, most cost-efficient and authorized under applicable Law.

Highway means a travel way for vehicular traffic that is included in the State or federal highway system.

Highway Service Systems means GDOT's or a Governmental Entity's lighting and electrical systems, traffic control systems, communications systems and irrigation systems serving street or highway purposes (including ITS and Intelligent Vehicle Highway System facilities).

Historic Property means any prehistoric or historic district, site, building, structure or object included in, or eligible for inclusion in, either the National Register of Historic Places or the Georgia Register of Historic Places.

Immigration Act means the Georgia Immigration & Compliance Act, O.C.G.A. § 13-10-90, *et seq.* as set forth in Article 10.6.4 of the Agreement.

Incident means any unplanned event during the course of construction.

Incident Management Plan means Design-Build Team's plan for detection and response to Incidents or Emergencies, as part of the PMP.

Indemnified Parties means GDOT, the State, the State Transportation Board, and their respective successors, assigns, officeholders, officers, directors, commissioners, agents, representatives, consultants and employees. Indemnified Party shall mean any of the aforementioned.

Informal Consultation means during Section 7 Consultation (Endangered Species Act) that a Federal agency determines that its action may affect a listed species.

Instructions to Proposers (**ITP**) means the document that provides instructions to be followed by Proposers in their responses to the RFP.

Insurance Policies means all of the insurance policies Design-Build Team is required to carry pursuant to Article 16.1 of the Agreement.

Intellectual Property means all current and future legal and/or equitable rights and interests in know-how, patents (including applications), copyrights (including moral rights), trademarks (registered and unregistered), service marks, trade secrets, designs (registered and unregistered), utility models, circuit layouts, plant varieties, business and domain names, inventions, solutions embodied in technology, and other intellectual activity, and applications of or for any of the foregoing, subsisting in or relating to the Project, Project design data or Project traffic data. Intellectual Property includes toll-setting and traffic management algorithms, and software used in connection with the Project (including but not limited to software used for management of traffic on the Project), and Source Code. Intellectual Property also includes the trade secret information contained in proprietary pricing information. Intellectual Property is distinguished from physical construction and equipment itself and from drawings, plans, specifications, layouts, depictions, manuals and other documentation that disclose Intellectual Property.

Intelligent Transportation System (ITS) has the meaning set forth in Section 17 of the Technical Provisions.

Intelligent Vehicle Highway System (IVHS) means smart vehicle and smart highway technologies to improve the safety, efficiency and environmental impact of highway facilities.

Interim Completion means satisfaction of the criteria for opening an Early Portion of the Work so that it is safe to open to the traveling public.

Interim Completion Date means the date upon which Design-Build Team has satisfied all conditions for opening an Early Portion of the Work so that it is safe to open to the traveling public.

Interim Completion Deadline means the deadline and required date for each of the Early Portions of the Work Interim Completion Deadlines are set forth in the Milestone Deadlines shown on Exhibit 9 to the Agreement, as such deadline(s) may be extended for Relief Events pursuant to the Agreement.

Interim Design means any submittal of Design Documents after the Preliminary Plans have been accepted but prior to submittal of Final Plans for the entire Project or any approved Project segment. Interim Designs are intended to resolve conflicts and unresolved comments from the Preliminary Plans submittal.

Joint Project Inspection has the meaning set forth in Section 19.3.2 of the Technical Provisions.

Key Contract means any one of the following Contracts for Work that Design-Build Team or Design-Build Team's Contractor's causes to be performed:

(a) All prime construction Contracts;

(b) All project or program management services, architectural design, or engineering Contracts; and

(c) All other Contracts with a single Contractor or Subcontractor which individually or in the aggregate total in excess of $25 million.

Key Contractor means any Contractor or Subcontractor, as the case may be, under any Key Contract.

Key Personnel or **Key Team Members** means those individuals appointed by Design-Build Team and approved by GDOT from time to time to fill the "Key Personnel" positions. The specific individuals appointed by Design-Build Team and approved by GDOT to initially fill certain of the Key Personnel positions are identified in Exhibit 2 to the Agreement.

Landscape Enhancement Plan has the meaning set forth in Section 15.3.1 of the Technical Provisions.

Law or **Laws** means (a) any statute, law, code, regulation, ordinance, rule or common law, (b) any binding judgment (other than regarding a Dispute), (c) any binding judicial or administrative order or decree (other than regarding a Dispute), (d) any written directive, guideline, policy requirement or other governmental restriction (including those resulting from the initiative or referendum process, but excluding those by GDOT within the scope of its administration of the DB Documents or in the normal course of its adoption of new or revised technical standards pursuant to Article 7.2.5 of the Agreement) or (e) any similar form of decision of or determination by, or any written interpretation or administration of any of the foregoing by, any Governmental Entity, in each case which is applicable to or has an impact on the Project or the Work, whether taking effect before or after the Effective Date, including Environmental Laws. "Laws", however, excludes Governmental Approvals.

Lead Contractor shall mean the entity designated as a Proposer's "Lead Contractor" in its SOQ. There may only be one Lead Contractor per Proposer team.

Lead Engineering Firm shall mean the entity designated as a Proposer's "Lead Engineering Firm" in its SOQ. There may only be one Lead Engineering Firm per Proposer team.

Line or **line** means, in the context of Utilities or Highway Service Systems, a line, pipeline, conduit or cable used for utility purposes, including underground, surface or overhead facilities.

Liquidated Damages means such liquidated damages as may accrue and be due and payable by Design-Build Team to GDOT as set forth under Article 17.4 of the Agreement and as set forth under Exhibit 18 thereto.

Loss or **Losses** means any loss, damage, injury, liability, obligation, cost, response cost, expense (including attorneys', accountants' and expert witnesses' fees and expenses (including those incurred in connection with the enforcement of any indemnity or other provision of the Agreement)), fee, charge, judgment, penalty or fine. Losses include injury to or death of persons, damage or loss of property, and harm or damage to natural resources.

Major Culvert means a culvert that provides an opening of more than 35 square feet in a single or multiple installations. A Major Culvert may consist of a single round pipe, pipe arch, open or closed-bottom box, bottomless arch, or multiple installations of these structures placed adjacent or contiguous as a unit. Certain Major Culverts are classified as bridges when they provide an opening of more than 20 feet, measured parallel to the roadway; such culverts may be included in the bridge inventory.

Major Non-Participating Member means a Proposer's Lead Contractor and Lead Engineering Firm. If any of these entities qualify as a Participating Member, then that entity shall not be treated as a Major Non-Participating Member. Major Non-Participating Members are not considered Contractors to Proposer regardless of their role in the performance of Project-related services.

Major River Crossing means a crossing with a 100-year storm event flow in excess of 10,000 cubic feet per second (cfs).

Management Plans means all of the management plans identified in Section 2 of the Technical Provisions.

Memorandum of Understanding (MOU) means a formal agreement between GDOT and one or more agencies, organizations or providers.

Milestone Deadline shall have the same meaning as Completion Deadline.

Minor Culvert means any culvert not classified as a Major Culvert.

Mobilization means Work performed to establish and remove (demobilization) offices, plants, and facilities; and to move personnel, equipment, and supplies to and from the Project site to begin Construction Work or complete Construction Work.

NaviGAtor Contractor means that certain Separate Contractor engaged by GDOT to provide the NaviGAtor System to be included and integrated into the ITS to be incorporated into the Project, if such system is identified in Section 17 of the Technical Provisions to be incorporated into the Project.

NaviGAtor System means the "NaviGAtor" advanced transportation management system to be included as a part of the ITS as set forth pursuant to Section 17.1.3 of the Technical Provisions.

NaviGAtor Work means the work to be provided by the NaviGAtor Contractor, coordinated with the Work, for completion of the NaviGAtor System for the Project.

NEPA means the National Environmental Policy Act, 42 U.S.C. § 4321 *et seq*., as amended and as it may be amended from time to time.

NEPA Approval means the (a) NEPA document as approved by FHWA including any studies, reports, Environmental Commitments, and all other procedural requirements and documents required for FHWA approval for the Project or a portion of the Project, as (b) may be modified pursuant to all approved supplements and re-evaluations pertaining to the Project.

NEPA Finality Date means the date NEPA Approval becomes final and non-appealable and the federal statute of limitations for commencing legal action to challenge the validity of any NEPA Approval has expired.

Nonconforming Work means Work that does not conform to the requirements of the DB Documents, the Governmental Approvals, applicable Law or the Design Documents.

Nonrefundable Deductions means such nonrefundable deductions as may accrue and be due and payable by Design-Build Team to GDOT as set forth under Article 17.4 of the Agreement and as set forth under Exhibit 18 thereto.

Notice of Award means formal acceptance of the Apparent Successful Proposer.

Notice of Termination for Convenience means written notice issued by GDOT to Design-Build Team terminating the Agreement in whole or in part for convenience.

NTP means a written notice issued by GDOT to Design-Build Team authorizing Design-Build Team to proceed with the portion or phase of the Work as being designated as subject to such notice to proceed in the Proposal Schedule, Project Schedule, or otherwise in the Agreement Documents, including without limitation NTP 1, NTP 2, and NTP 3.

NTP 1 means a written notice issued by GDOT to Design-Build Team authorizing Design-Build Team to proceed with the portion of the Work described in Article 3.3.1.1 of the Agreement.

NTP 1 Conditions Deadline means the outside date set forth in the Milestone Deadlines (or the Baseline Project Schedule as to the extent such outside date is adjusted thereby) by which Design-Build Team is obligated under the Agreement to satisfy all conditions to issuance of NTP 1, as such deadline may be extended for Relief Events from time to time pursuant to the Agreement.

NTP 2 means a written notice issued by GDOT to Design-Build Team authorizing Design-Build Team to proceed with the portion of the Work described in Article 3.3.1.2 of the Agreement.

NTP 2 Conditions Deadline means the outside date set forth in the Milestone Deadlines (or the Baseline Project Schedule as to the extent such outside date is adjusted thereby) by which Design-Build Team is obligated under the Agreement to satisfy all conditions to issuance of NTP 2, as such deadline may be extended for Relief Events from time to time pursuant to the Agreement.

NTP 3 means a written notice issued by GDOT to Design-Build Team pursuant to Article 3.3.1.3 of the Agreement authorizing Design-Build Team to proceed with the remaining Work and other activities pertaining to the Project.

NTP 3 Conditions Deadline means the outside date set forth in the Milestone Deadlines (or the Baseline Project Schedule as to the extent such outside date is adjusted thereby) by which Design-Build Team is obligated under the Agreement to satisfy all conditions to issuance of NTP 3, as such deadline may be extended for Relief Events from time to time pursuant to the Agreement.

Open Book Basis means allowing the relevant Party to review all underlying assumptions and data associated with the issue in question, including, but not limited to, assumptions as to costs of the Work, schedule, composition of equipment spreads, equipment rates, labor rates, productivity, estimating factors, design and productivity allowance, contingency and indirect costs, risk pricing, discount rates, interest rates, inflation and deflation rates, and other items reasonably required by the relevant Party.

Open Government Laws mean, collectively, the Georgia Open Records Act, Ga. Code Ann. §§ 50-18-70 *et seq.*, Section 32-2-80(a)(40) of the Code and Section 672-17.06 of the Rules, as amended from time to time.

Optical Character Recognition (OCR) means the process of converting an image to text.

P&P Bonds or Performance and Payment Bonds means the bonds meeting the requirements of Article 16.2.1 of the Agreement.

P&P Obligor means the Person identified as the obligor or account party in the P&P Bonds, as applicable.

Participating Agency means a public, quasi-public, or private agency that has agreed to cooperate with and assist Design-Build Team during an Emergency.

Participating Member means (a) if the Proposer is a joint venture, partnership, or limited liability company, each member of the joint venture, partnership or limited liability company; or (b) if the Proposer is a corporation or other corporate entity, the Proposer.

Party means Design-Build Team or GDOT, as the context may require, and "**Parties**" means Design-Build Team and GDOT, collectively.

Payment Activity shall have the meaning set forth in Section 2.6 of the Technical Provisions.

Payment for Work Product means the Stipulated Fee to be paid to unsuccessful responsive Proposers for their Work Product as described in Form N to the ITP.

Payment Request means the request for payment on account of the Work all in accordance with Section 2.6 of the Technical Provisions, and with the terms and conditions set forth in GDOT Standard Specification 109.03.

Permanent Works are permanent structures and parts thereof required of the completed DB Documents.

Person means any individual, corporation, joint venture, limited liability company, company, voluntary association, partnership, trust, unincorporated organization, Governmental Entity, or GDOT.

Phase 1 Hazardous Materials Investigation means an environmental assessment conducted in accordance with the DB Documents and ASTM E-1527-05, or any future revision or replacement thereof, to identify Recognized Environmental Conditions and potential Recognized Environmental Conditions.

Plans means (only where capitalized) contract drawings, working drawings, supplemental drawings, detail sheets or exact reproductions thereof, which show the location, character, dimensions and details of the Construction Work to be done.

Pre-existing Hazardous Materials means Hazardous Materials that meet all the following criteria:

(a) The Hazardous Materials are in, on or under the Right of Way as of the date GDOT makes available to Design-Build Team the affected parcel; or

(b) The Hazardous Materials are not located in, on or under any Project Specific Locations or Additional Properties, except Additional Properties required due to GDOT Changes (including GDOT Changes regarding the initial construction).

For purposes of determining whether Hazardous Materials were in, on or under the Right of Way or any Additional Properties required by GDOT to be included in the Property as a result of GDOT Changes, as of the date on which GDOT makes available to Design-Build Team the affected parcel, Design-Build Team shall have the burden of proof to demonstrate it was not a Design-Build Team Release of Hazardous Materials:

(i) As to any Hazardous Materials not identified as being present as of such date in the Phase 1 investigations of the Project conducted by GDOT prior to the Effective Date or any Phase 1 Hazardous Materials Investigation or Phase 2 Hazardous Materials Investigation supplementing the foregoing report prepared prior to the Effective Date; and

(ii) As to any Additional Properties required by GDOT to be included in the Property as a result of GDOT Changes, any Phase 1 Hazardous Materials Investigation thereof prepared and delivered prior to the Effective Date.

For the purpose of this definition, "makes available" means:

(i) The Effective Date, except for parcels not yet acquired as of the Effective Date; and

(ii) As to parcels not yet acquired as of the Effective Date and as to Additional Properties required by GDOT to be included in the Property as a result of GDOT Changes, the date Design-Build Team first receives the right to take and maintain possession of the parcel for all purposes for the remainder of the Term in accordance with the DB Documents, including commencement of construction, as the result of GDOT's having secured title or right of possession by contract or title instrument or by a special commissioners' award through the eminent domain process or otherwise.

Preliminary Plans means the Design Documents which provide the preliminary design necessary for the related to construction, operations, and maintenance of the entire Project including any Utility Adjustments required by the Project.

Presidential Disaster Declaration means a declaration of a major disaster by the President of the United States triggering assistance from FEMA pursuant to the Disaster Relief Act of 1974 (Pub.L. No. 93-288, as amended).

Price Proposal means the price component of the Proposal evaluation as described in the ITP.

Price Proposal Score means the score calculated in accordance with the Price Proposal formula as described in the ITP.

Principal Project Documents means the Security Instruments and the Design-Build Contract.

Professional Engineer means a person who is duly licensed and registered by the Georgia State Board of Registration for Professional Engineers and Land Surveyors to engage in the practice of engineering in the State of Georgia.

Professional Land Surveyor means a person registered by the Georgia State Board of Registration for Professional Engineers and Land Surveyors to practice the profession of land, boundary, or property surveying or other similar professional practices.

Project means the Project as defined in the RFP, that is the subject of this Agreement, and which shall include the transportation facilities and all related structures, and improvements, including integration of the ITS, and communications systems used in connection with operation of such transportation facilities, to be designed and constructed pursuant to the terms of the DB Documents.

Project Extension means a linear addition to the original Project by Design-Build Team, including any at either terminus of the original Project and any linear improvement that interconnects with the original Project.

Project Information Contact means the person designated by Design-Build Team to manage Design-Build Team's public information activities as more particularly described in Section 2.2.3 of the Technical Provisions.

Project Manager means the individual designated by Design-Build Team and approved in writing by GDOT in the position to take full responsibility for the prosecution of the Work and will act as a single point of contact on all matters on behalf of Design-Build Team.

Project Schedule shall have the meaning set forth in Section 2.5 of the Technical Provisions.

Project Schedule Narrative shall have the meaning set forth in Section 2.5 of the Technical Provisions.

Project Specific Locations means any additional temporary property interests or rights, other than ROW or Additional Properties, which are not contiguous to the Property, that Design-Build Team may require for performance of the Work, including for temporary activities in connection with the Construction Work, such as construction work sites, temporary work areas, staging areas, storage areas, and earthwork material borrow sites.

Project Schedule Update shall have the meaning set forth in Section 2.5 of the Technical Provisions.

Property has the meaning set forth in Article 2.2.1 of the Agreement and shall include only such property as identified in the Environmental Document Approval.

Proposal means the complete response to the RFP which may include, but is not limited to the Proposer's Administrative Information Submittals, Technical Proposal for the Project, and Price Proposal for the Project.

Proposal Bond means the security that Proposers submit to GDOT with their Proposals

Proposal Due Date means the deadline for submission of the Proposal to GDOT as defined in the ITP Section 1.4.

Proposal Revisions has the meaning set forth in Section 5.4 of the ITP.

Proposal Schedule means the high level, logic based, critical path schedule representing Design-Build Team's plan to complete performance of the Work beginning on the date of NTP 1 to Final Acceptance of the Work, submitted with the Proposal.

Proposed Right of Way or Proposed ROW means the State Proposed/DB Team Acquired Right of Way and the State Proposed/State Acquired Right of Way.

Proposed Supplemental Agreement has the meaning set forth in Article 13 of the Agreement.

Proposer or **Proposers** has the meaning set forth in Section 1.1 in the ITP.

Proprietary Intellectual Property means Intellectual Property created, used, applied or reduced to practice in connection with the Project or the Work that derives commercial value from its protection as a trade secret under applicable Law or from its protection under patent law.

Protection in Place means any action taken to avoid damaging a Utility which does not involve removing or relocating that Utility, including staking the location of a Utility, exposing the Utility, avoidance of a Utility's location by construction equipment, installing steel plating or concrete slabs, encasement in concrete, temporarily de-energizing power lines, and installing physical barriers. The term includes both temporary measures and permanent installations meeting the foregoing definition.

Provided Approvals means the Governmental Approvals for the Project obtained or to be obtained by GDOT, as specifically listed in Section 4.3 of the Technical Provisions (including any such approvals as may be required from GDOT independent of GDOT's Project administration pursuant to Article 6.2 of the Agreement).

Public Information and Communications Plan (PICP) has the meaning set forth in Section 2.2.3 of the Technical Provisions.

Punch List means an itemized list of Construction Work that remains to be completed following Substantial Completion but as a condition to Final Acceptance, provided that the nature of any such incomplete Work, and the correction and completion of same, will have no material or adverse effect on the normal and safe use and operation of the Project.

Punch List Period means the time provided for Design-Build Team's completion of Punch List Work, which shall be the time between Substantial Completion and Final Acceptance as provided in the Project Schedule.

QA means quality assurance.

QA/QC means quality assurance and quality control.

Quality Management Plan (QMP) means the set of GDOT-approved plans for quality management and control of the Project and Work, as set forth in Section 2.3 of the Technical Provisions.

Quality Assurance Manager (QAM) means the individual retained by Design-Build Team as the Key Personnel with the authority and responsibility for ensuring establishment and maintenance of, and compliance with, the Quality Management Plan. The Quality Assurance Manager shall be a Professional Engineer as defined in this Exhibit 1.

Quitclaim Deed means a quitclaim deed to be executed by a Utility Owner relinquishing its rights to maintain a Utility in a particular location, as more particularly described in Section 6.2.2.2 of the Technical Provisions.

Railroad means, depending on the context, either the right of way, tracks, and systems used for rail traffic in the vicinity of the Project, or the owners and/or operators of such rail systems.

Railroad Right of Entry Agreement has the meaning described in Section 14.2.2.2 of the Technical Provisions.

Recognized Environmental Condition has the meaning set forth in ASTM E-1527-00.

Record Drawings (also known as As-Builts, as-builts, or as-built drawings) means construction drawings and related documentation revised to show as-built changes to the Project at Final Acceptance. Interim marked-in-the-field or red-lined drawings to be provided during the progress of the Work as required pursuant to the Technical Provisions shall not constitute the final Record Drawings.

Reference Information Documents (RIDs) means the collection of information, data, documents and other materials that GDOT has provided to Design-Build Team for general or reference information only.

Related Transportation Facility(ies) means all existing and future highways, streets and roads, including upgrades and expansions thereof, that is/are or will be adjacent to, connecting with or crossing under or over the Project, as specifically identified in the Technical Provisions.

Release for Construction or **RFC** means the written authorization by GDOT to proceed with any designated phase of the Construction Work based on the approved Final Plans.

Release of Hazardous Materials means any spill, leak, emission, release, discharge, injection, escape, leaching, dumping or disposal of Hazardous Materials into the soil, air, water, groundwater or environment, including any exacerbation of an existing release or condition of Hazardous Materials contamination.

Relief Event has the meaning set forth in Article 14.1.1 of the Agreement.

Relief Event Determination has the meaning set forth in Article 14.1.1 of the Agreement.

Relief Event Notice means the written notice required to be provided by Design-Build Team under Article 13.3.2 of the Agreement.

Replacement Housing Calculation means the opportunity to provide the displaced person with the financial assistance to purchase or rent and occupy a comparable replacement dwelling without involuntarily incurring additional financial means due to the displacement.

Replacement Utility Property Interest means any permanent right, title or interest in real property outside of the Property (e.g., a fee or an easement) that is acquired for a Utility being reinstalled in a new location as a part of the Utility Adjustment Work. The term specifically excludes any statutory right of occupancy or permit granted by a Governmental Entity for occupancy of its real property by a Utility.

Request for Change Proposal means a written notice issued by GDOT to Design-Build Team setting forth a proposed GDOT Change and requesting Design-Build Team's assessment of cost, and Project Schedule impacts thereof, as set forth in Article 13.2.1 of the Agreement.

Request for Information (RFI) means a written request by the Design-Build Team to GDOT requesting clarification of the DB Document requirements.

Request for Proposals (RFP) means all documents, whether attached or incorporated by reference, utilized for soliciting proposals. The RFP is the only solicitation utilized by the Department in the One Phase Low Bid selection method. The RFP is the second phase utilized by the Department for the Two Phase Low Bid and Best Value selection methods.

Request for Qualifications (RFQ) means all documents, whether attached or incorporated by reference, utilized by the Department for soliciting interested Proposers to apply for prequalification including instruction for submitting a Statement of Qualification (SOQ), evaluation criteria and minimum qualifications required of a Design-Build Team. The RFQ is the first phase of a two-phase process utilized by the Department for the Two Phase Low Bid and Best Value selection methods.

Reserved means a section of the DB Documents (Design-Build Agreement, Technical Provisions, or Programmatic Provisions) that is not being utilized for this contract. Sections marked Reserved have no requirements and references to sections marked Reserved shall mean that there are no additional requirements beyond the reference point.

Revised Baseline Project Schedule shall have the meaning set forth in Section 2.5 of the Technical Provisions.

Right of Way (**ROW)** means the Existing Right of Way and Proposed Right of Way.

Right of Way Acquisition Plan or **ROW Acquisition Plan** has the meaning set forth in Section 5 of Volume 2.

Rules means Chapter 672-18 of the Rules of the State Department of Transportation, Governing the Design-Build Procedures.

Safety Compliance means any and all improvements, repair, reconstruction, rehabilitation, restoration, renewal, replacement and changes in configuration or procedures respecting the Project to correct a specific safety condition or risk of the Project that GDOT has reasonably determined to exist by investigation or analysis and that is in violation of the requirements of the DB Documents.

Safety Compliance Order means a written order or directive from GDOT to Design-Build Team to implement Safety Compliance measures.

Safety Standards means those provisions of the Technical Provisions or Technical Documents that GDOT, FHWA, OSHA, or AASHTO considers to be important measures to protect public safety or worker safety. As a matter of clarification, provisions of Technical Provisions or Technical Documents primarily directed at durability of materials or equipment, where the durability is primarily a matter of life cycle cost rather than protecting public or worker safety, are not Safety Standards.

Schedule of Values (SOV) shall have the meaning set forth in Section 2.6 of the Technical Provisions.

Schematic Plan of Project means Design-Build Team's Schematic Plan specific to the preliminary roadway plans showing the concept and technical solutions in accordance with the provisions of Exhibit C of the ITP. A Schematic Plan may include but is not limited to standard design plan sheets, roll plots, and conceptual drawings.

Security Document means any mortgage, deed of trust, pledge, lien, indenture, trust agreement, hypothecation, assignment, collateral assignment, financing statement under the Uniform Commercial Code of any jurisdiction, security instrument or other charge or encumbrance of any kind, including any lease in the nature of a security instrument, given to any Person as security for Design-Build Team Debt or Design-Build Team's obligations pertaining to Design-Build Team Debt and encumbering the Design-Build Team's Interest.

Selection Recommendation Committee means the group of individuals authorized by GDOT (if any) to recommend the Best Value Proposer to the Steering Committee.

Separate Contractor(s) means each and any separate contractor or vendor engaged by GDOT or any other governmental authority or agency of the State to perform, provide, and/or supply work, services, labor or materials for the Project that is expressly excluded from Design-Build Team's Work pursuant to the DB Documents.

Service Line means a Utility line, the function of which is to directly connect the improvements on an individual property to another Utility line located off such property, which other Utility line connects more than one such individual line to a larger system. However, unless otherwise noted in the Technical Provisions, the term "Service Line" excludes any line that supplies an active feed from a Utility Owner's facilities to supply, activate or energize GDOT's or a Governmental Entity's Highway Service System. Such line, including its actual connection to the Utility facility, shall instead be considered to be part of the applicable Highway Service System.

Site means the Property and any temporary rights or interests that Design-Build Team may acquire in connection with the Project or the Utility Adjustments included in the Construction Work, including Project Specific Locations.

Source Code and **Source Code Documentation** mean software written in programming languages including all comments and procedural code, such as job control language statements, in a form intelligible to trained programmers and capable of being translated into object or machine readable code for operation on computer equipment through assembly or compiling, and accompanied by documentation, including flow charts, schematics, statements of principles of operations, architectural standards, and commentary, explanations and instructions for compiling, describing the data flows, data structures, and control logic of the software in sufficient detail to enable a trained programmer through study of such documentation to maintain and/or modify the software without undue experimentation. Source Code and Source Code Documentation also include all modifications, additions, substitutions, updates, upgrades and corrections made to the foregoing items.

Staged Design Submittals shall have the meaning set forth in Section 3.3.7.1 in the Technical Provisions.

Standard Utility Agreement (SUA) means an Agreement providing for relocation or adjustment work to be performed by the Utility and/or its consultant or contractor and modification of easement limited provisions, if applicable. To the extent practical, reimbursement by the Department will be made based upon the Department's specifications, agreements and forms or consultant and construction contract work. The payment method may be actual cost, unit price, or lump sum as appropriate.

State means the State of Georgia.

State and Local Government Series (SLGS) Index means the State and Local Government Series (SLGS) Index published and maintained by the United States Department of the Treasury.

State Highway means a highway designated as part of the state highway system under Code 32-4-21.

Statement of Qualifications or **SOQ** has the meaning set forth in Section 1.1 of the ITP.

Stipulated Fee means the amount GDOT will pay unsuccessful responsive Proposers for their Work Product.

Subcontractor means any other Person, including any Supplier with whom any Contractor has further subcontracted, purchased or procured any part of the Work, at all tiers.

Submittal means any document, work product or other written or electronic end product or item required under the DB Documents to be delivered or submitted to GDOT, as applicable.

Substantial Completion means satisfaction of the criteria for completion of Construction Work as set forth in Article 7.7 of the Agreement, as and when confirmed by GDOT's issuance of a certificate in accordance with the procedures and within the time frame established in Article 7.7.1 of the Agreement.

Substantial Completion Date means the date upon which Design-Build Team has satisfied all conditions of and for Substantial Completion.

Substantial Completion Deadline means the deadline and required date for Substantial Completion of the Project as set forth in Exhibit 9, as such deadline may be extended for Relief Events from time to time pursuant to the Agreement, time being of the essence.

Subsurface Utility Engineering (SUE) means an engineering process for accurately identifying the quality of overhead/underground utility information needed for highway plans, and for acquiring and managing that level of information during the development of a highway project, as more particularly described at the FHWA website http://www.fhwa.dot.gov/programadmin/sueindex.cfm.

Supplemental Agreement means a mutual agreement between GDOT and Design-Build Team for changes in the Work under Article 13 of the Agreement, including on account of any Relief Event Determination and/or Compensation Event Determination as set forth under Article 13.4 of the Agreement.

Supplier means any Person not performing work at or on the Site that supplies machinery, equipment, materials, hardware, software, systems or any other appurtenance to the Project to Design-Build Team or to any Contractor in connection with the performance of the Work. Persons who merely transport, pick up, deliver or carry materials, personnel, parts or equipment or any other similar items or persons to or from the Site shall not be deemed to be performing Work at the Site.

Surety means each properly licensed surety company, insurance company or other Person approved by GDOT, which has issued any of the P&P Bonds.

Taxes means federal, State, local or foreign income, margin, gross receipts, sales, use, excise, transfer, consumer, license, payroll, employment, severance, stamp, business, occupation, premium, windfall profits, environmental (including taxes under Section 59A of the Internal Revenue Code of 1986, as amended), customs, permit, capital stock, franchise, profits, withholding, social security (or similar), unemployment, disability, real property, personal property, registration, value added, alternative or add-on minimum, estimated or other taxes, levies, imposts, duties, fees or charges imposed, levied, collected, withheld or assessed at any time, whether direct or indirect, relating to, or incurred in connection with, the Project, the performance of the Work, or act, business, status or transaction of Design-Build Team, including any interest, penalty or addition thereto, and including utility rates or rents, in all cases whether disputed or undisputed.

Technical Documents means all the standards, criteria, requirements, conditions, procedures, specifications and other provisions set forth in the manuals and documents identified in the DB Documents, as such provisions may (a) have been generally revised from time to time up the RFP advertisement date, or (b) be changed, added to or replaced pursuant to the Agreement.

Technical Proposal means the technical component of the Proposal evaluation as described in the ITP.

Technical Provisions means Volume 2 as such documents may (a) have been generally revised from time to time that are in effect at the date of the RFP advertisement, or (b) be changed, added to or replaced pursuant to the Agreement.

Temporary Works is any temporary construction work necessary for the construction of the Permanent Works. This includes falsework, formwork, scaffolding, shoring, temporary earthworks, sheeting, cofferdams, special erection equipment, etc.

Term has the meaning set forth in Article 3.1 of the Agreement.

Termination by Court Ruling has the meaning set forth in Article 19.11 of the Agreement.

Termination Compensation means each of the measure of compensation owing from GDOT to Design-Build Team upon termination of the Agreement prior to the stated expiration of the Term, pursuant to Article 19, and as set forth in Exhibit 20 to the Agreement.

Termination Date means (a) the date of expiration of the Term or (b) if applicable, the Early Termination Date.

Termination for Convenience has the meaning set forth in Article 19.1.1 of the Agreement.

Third-Party Claim means, subject to Article 16.5.4 of the Agreement, any and all claims, disputes, disagreements, causes of action, demands, suits, actions, investigations, or legal or administrative proceedings asserted, initiated or brought by a Person that is not an Indemnified Party or Design-Build Team with respect to any Third-Party Loss.

Third-Party Loss means, subject to Article 16.5.4 of the Agreement, any actual or alleged Loss sustained or incurred by a Person that is not an Indemnified Party or Design-Build Team.

Threatened or Endangered Species means any species listed by the USFWS as threatened or endangered pursuant to the Endangered Species Act, as amended, 16 U.S.C. §§ 1531, *et seq*.

Time-Impact Analysis (TIA) shall have the meaning set forth in Section 2.5 of the Technical Provisions.

Traffic Management Center is a center for the management and distribution of information to Users on a regional or statewide basis.

Transferee means any party as defined pursuant to Article 21.2.2.1 of the Agreement, solely for purposes of Articles 21.2 through 21.5 of the Agreement.

Transportation Management Plan means Design-Build Team's plan for transportation management throughout the Term, as more particularly described in Article 9.2.2 the Agreement and Section 18.3.1 of the Technical Provisions.

Travel Lane means the portion of roadway for the movement of vehicles, exclusive of shoulders.

Two-Week Detail Schedule shall have the meaning set forth in Section 2.5 of the Technical Provisions.

Uniform Act means the Federal Uniform Relocation Assistance and Real Property Acquisition Policies Act, P.L. 91-646, as amended.

Uninsurable Risk means a risk, or any component of a risk, against which Design-Build Team or a Contractor is required to insure pursuant to the Agreement and for which, at any time after the Effective Date, either:

(a) the insurance coverage required under the Agreement is not available in relation to that risk from insurers that meet the qualifications set forth in Article 16.1.2 of the Agreement; or

(b) the terms and conditions for insuring that risk are such that the risk is not generally being insured against in the insurance market under commercially reasonable terms from insurers that meet the qualifications set forth in Article 16.1.2 of the Agreement.

Utility or **utility** means any of the following:

(a) a public, private, cooperative, municipal and/or government line, facility or system used for the carriage, transmission and/or distribution of cable television, electric power, telephone, telegraph, water, gas, oil, petroleum products, steam, chemicals, hydrocarbons, telecommunications, sewage, and similar commodities, that directly or indirectly serves the public;

(b) a line, facility or system which (i) carries or transmits a commodity referenced in clause (a) above but does not directly or indirectly serve the public, and (ii) is designated in Volume 1 or Volume 2 to be treated, for purposes of the DB Documents only, in the same manner as a line, facility or system that qualifies as a Utility under clause (a) above; and

(c) a radio tower or transmission tower (including cellular) that directly or indirectly serve the public.

Notwithstanding the foregoing, the term “Utility” or “utility” excludes:

(a) all storm water lines, facilities, and systems that are part of the drainage system for the Property or connect to that system; and

(b) GDOT’s or a Governmental Entity’s Highway Service Systems.

The necessary appurtenances to each Utility facility shall be considered part of such Utility. Any Service Line connecting directly to a Utility shall be considered an appurtenance to that Utility, regardless of the ownership of such Service Line.

Utility Accommodation Manual (UAM) means the Utility Accommodation Manual issued by GDOT, as the same may be amended, supplemented or replaced by GDOT from time to time.

Utility Adjustment Field Modification means any horizontal or vertical design change to a Utility Adjustment required by Design-Build Team or proposed by a Utility Owner due either

to roadway design or to conditions not accurately reflected in the corresponding Utility Work Plan for which the review and comment/approval process has been completed, that alters the design included in the approved Utility Work Plan. An example would be shifting the alignment of an 8" water line to miss a roadway drainage structure. A minor change (e.g., an additional water valve, an added Utility marker at ROW line, a change in vertical bend, etc.) will not be considered a Utility Adjustment Field Modification, but shall be shown in the Record Drawings.

Utility Adjustment means each relocation (temporary or permanent), abandonment, Protection in Place, removal (of previously abandoned Utilities as well as of newly abandoned Utilities), replacement, reinstallation, and/or modification of existing Utilities necessary to accommodate construction, operation, maintenance and/or use of the Project; provided, however, that the term "Utility Adjustment" shall not refer to any of the work associated with facilities owned by any railroad. For any Utility crossing the Property, the Utility Adjustment Work for each crossing of the Property by that Utility shall be considered a separate Utility Adjustment. For any Utility installed longitudinally within the Property, the Utility Adjustment Work for each continuous segment of that Utility located within the Property shall be considered a separate Utility Adjustment.

Utility Adjustment Work means all efforts and costs necessary to accomplish the required Utility Adjustments, including all coordination, design, design review, permitting, construction, inspection, maintenance of records, relinquishment of Existing Utility Property Interests, preparation of Utility Joint Use Acknowledgements, and acquisition of Replacement Utility Property Interests, whether provided by Design-Build Team or by the Utility Owners. The term also includes any reimbursement of Utility Owners which is Design-Build Team's responsibility pursuant to Article 7.5 of the Agreement. Any Utility Adjustment Work furnished or performed by Design-Build Team is part of the Work; any Utility Adjustment Work furnished or performed by a Utility Owner is not part of the Work.

Utility Enhancement means a Betterment or a Utility Owner Project, as referenced in Section 6.3.6.1 of the Technical Provisions.

Utility Joint Use Acknowledgment or **Utility Joint Use Agreement** means an agreement between GDOT and a Utility Owner that establishes the rights and obligations of GDOT and the Utility Owner with respect to occupancy of the Property by such Utility Owner's Utility.

Utility Manager (UM) means the senior staff person designated by Design-Build Team to be responsible for coordination and oversight of Utility Adjustment operations during the planning, design, and construction phases of the Work, as more particularly described in Section 6.3 of the Technical Provisions.

Utility Owner means the owner or operator of any Utility (including both privately held and publicly held entities, cooperative utilities, and municipalities and other governmental agencies).

Utility Owner Project means the design and construction by or at the direction of a Utility Owner (or by Design-Build Team) of a new Utility installation other than (a) as part of a Utility Adjustment or (b) to provide service to the Project. Betterments are not Utility Owner Projects. Utility Owner Projects are entirely the financial obligation of the Utility Owner.

Utility Tracking Report means the report regarding Utilities likely to be impacted by the Project, which Design-Build Team shall maintain on a current basis, as more particularly described in Section 6.3 of the Technical Provisions.

Utility Work Plan has the meaning set forth in Section 6.3.8.5 of the Technical Provisions. Depending on the context, the term also refers to Supplemental Utility Work Plans and Utility Work Plan Retention Requests (both also described in Section 6.3.8.5 of the Technical Provisions).

Utility Work Plan Checklist means a checklist listing the required components of a Utility Work Plan, as referenced in Section 6.3.8.5 of the Technical Provisions.

Utility Work Plan Retention Request means the collection of plans and other information and materials which Design-Build Team is required to submit to GDOT in connection with each Utility proposed to remain at its original location within the Existing Right of Way or Property, as more particularly described in Section 6.3.2.2 of the Technical Provisions; a single Utility Work Plan Retention Request may address more than one such Utility.

Volume 1 means the Design-Build Agreement or the Agreement.

Volume 2 means the project-specific and programmatic GDOT technical provisions entitled “Technical Provisions - Volume 2”.

Warning Notice means a written notice that GDOT delivers to Design-Build Team pursuant to Article 17.2 of the Agreement.

Work means all of the work required to be furnished and provided by Design-Build Team under the DB Documents for the Project, including without limitation, all administrative, management, design, engineering, other professional services, construction, Utility Adjustment, utility accommodation, support services, ETCS and software integration, and coordination, except for those efforts which such DB Documents expressly specify will be performed by Persons other than Design-Build Team-Related Entities.

Work Breakdown Structure (WBS) means a deliverable-oriented hierarchical structure that breaks the Work into elements that have distinct identification and that contain specific scope characteristics. Each descending WBS level represents an increasingly detailed delineation of elements of the total Project scope. The WBS will contain all elements of the Work.

Work Code means a code assigned to a contract line item. Example: 400 is asphalt paving, 653 is highway traffic striping. The Work Codes were established and predefined by a GDOT Committee comprised of the Office of EEO, Construction, Bidding Administration, and Prequalification, in 2012. Not every item has a work code, only those items that are predominantly used on Highway construction projects. Contractors and Subcontractors in the GDOT directories are assigned work codes based upon their work description. Work codes are the most refined data available.

Work Product means any design files, concepts, ideas, technology, techniques, methods, processes, drawings, reports, plans and specifications used in the development of the

Proposal including the proposal and any ATCs being acquired by GDOT from unsuccessful responsive Proposers.

EXHIBIT 2

KEY PERSONNEL

[To be provided with execution version]

EXHIBIT 3

RESERVED

EXHIBIT 4

RIGHT OF WAY (Existing Right of Way and Required Right of Way)

See Attachment 5-1 for Right of Way (Existing Right of Way and Required Right of Way)

EXHIBIT 5

PROPOSAL SOV

EXHIBIT 6

RESERVED

EXHIBIT 7

RESERVED

EXHIBIT 8

FEDERAL REQUIREMENTS

Exhibit Description	No. of Pages
Attachment 1 – Federal Requirements for Federal Aid Construction Facilities	2
Attachment 2 – Required Contract Provisions, Federal-Aid Construction Contracts - FHWA Form 1273	13
Attachment 3 – GDOT Special Provision - Modifications to FHWA Form 1273	1
Attachment 4 – Federal Prevailing Wage Rate	3
Attachment 5 – Standard Federal Equal Employment Opportunity Construction Contract Specifications (Executive Order 11246) (43 FR 14895)	5
Attachment 6 – Disadvantaged Business Enterprise Program - Criteria for Acceptability	8
Attachment 7 – Debarment and Suspension Certification	1
Attachment 8 – Certification Regarding Use of Contract Funds for Lobbying	1
Attachment 9 – Compliance with Title VI of the Civil Rights Act of 1964, Etc., for Federal-Aid Contracts	2
Attachment 10 – Compliance with Buy America Requirements	1
Attachment 11 – Compliance with the Cargo Preference Act	2
Attachment 12 – GDOT - Appendix A	2

ATTACHMENT 1 TO EXHIBIT 8

FEDERAL REQUIREMENTS FOR FEDERAL-AID CONSTRUCTION FACILITIES

GENERAL. — The work herein proposed will be financed in whole or in part with federal funds, and therefore all of the statutes, rules and regulations promulgated by the federal government and applicable to work financed in whole or in part with federal funds will apply to such work. The "Required Contract Provisions, Federal-Aid Construction Contracts, Form FHWA-1273," are included in this Exhibit 8. Whenever in said required contract provisions references are made to:

(a) "SHA contracting officer," "SHA resident engineer," or "authorized representative of the SHA," such references shall be construed to mean GDOT or its Authorized Representative;

(b) "contractor," "prime contractor," "bidder" or "prospective primary participant," such references shall be construed to mean Design-Build Team or its authorized representative and/or the Design-Build Contractor or its authorized representative, as may be appropriate under the circumstances;

(c) "contract" or "prime contract," such references shall be construed to mean the Design-Build Agreement;

(d) "subcontractor," "supplier," "vendor," "prospective lower tier participant" or "lower tier subcontractor," such references shall be construed to mean, as appropriate, Contractors other than the Design-Build Contractor; and

(e) "department," "agency" or "department or agency entering into this transaction," such references shall be construed to mean GDOT, except where a different department or agency is specified.

PERFORMANCE OF PREVIOUS CONTRACT. — In addition to the provisions in Section II, "NONDISCRIMINATION," and Section VI, "SUBLETTING OR ASSIGNING THE CONTRACT," of the Form FHWA-1273 required contract provisions, Design-Build Team shall cause the contractor to comply with the following:

The bidder shall execute the CERTIFICATION WITH REGARD TO THE PERFORMANCE OF PREVIOUS CONTRACTS OR SUBCONTRACTS SUBJECT TO THE EQUAL OPPORTUNITY CLAUSE AND THE FILING OF REQUIRED REPORTS located in the proposal. No request for subletting or assigning any portion of the contract in excess of $10,000 will be considered under the provisions of Section VI of the required contract provisions unless such request is accompanied by the CERTIFICATION referred to above, executed by the proposed subcontractor.

NON-COLLUSION PROVISION. — The provisions in this section are applicable to all contracts except contracts for Federal Aid Secondary Projects. Title 23, United States Code, Section 112, requires as a condition precedent to approval by the Federal Highway Administrator of the contract for this work that each bidder file a sworn statement executed by, or on behalf of, the person, firm, association, or corporation to whom such contract is to be awarded, certifying that such person, firm, association, or corporation has not, either directly or indirectly, entered into any agreement, participated in any collusion, or otherwise taken any

action in restraint of free competitive bidding in connection with the submitted bid. A form to make the non-collusion affidavit statement required by 23 U.S.C. § 112 as a certification under penalty of perjury rather than as a sworn statement as permitted by 28 U.S.C. § 1746, is included in the Proposal.

PARTICIPATION BY DISADVANTAGED BUSINESS ENTERPRISES IN SUBCONTRACTING. — Part 26, Title 49, Code of Federal Regulations applies to this Project. Pertinent sections of said Code are incorporated within other articles or sections of the Agreement and any other Contract and the GDOT Disadvantaged Business Enterprise Program adopted pursuant to 49 CFR Part 26.

CONVICT PRODUCED MATERIALS

a. FHWA Federal-aid projects are subject to 23 C.F.R. § 635.417, Convict produced materials.

b. Materials produced after July 1, 1991, by convict labor may only be incorporated in a Federal aid highway construction project if such materials have been: (i) produced by convicts who are on parole, supervised release, or probation from a prison, or (ii) produced in a prison project in which convicts, during the 12 month period ending July 1, 1987, produced materials for use in Federal aid highway construction projects, and the cumulative annual production amount of such materials for use in Federal aid highway construction does not exceed the amount of such materials produced in such project for use in Federal aid highway construction during the 12 month period ending July 1, 1987.

ACCESS TO RECORDS

a. As required by 49 C.F.R. 18.36(i)(10), Design-Build Team and its Contractors shall allow FHWA and the Comptroller General of the United States, or their duly authorized representatives, access to all books, documents, papers, and records of Design-Build Team and Contractors which are directly pertinent to any grantee or subgrantee contract, for the purpose of making audit, examination, excerpts, and transcriptions thereof. In addition, as required by 49 C.F.R. 18.36(i)(11), Design-Build Team and its Contractors shall retain all such books, documents, papers, and records for three years after final payment is made pursuant to any such contract and all other pending matters are closed.

b. Design-Build Team agrees to include this section in each Contract at each tier, without modification except as appropriate to identify the Contractor who will be subject to its provisions.

ATTACHMENT 2 TO EXHIBIT 8

FHWA-1273 -- Revised May 1, 2012

REQUIRED CONTRACT PROVISIONS

FEDERAL-AID CONSTRUCTION CONTRACTS

I. General
II. Nondiscrimination
III. Nonsegregated Facilities
IV. Davis-Bacon and Related Act Provisions
V. Contract Work Hours and Safety Standards Act Provisions
VI. Subletting or Assigning the Contract
VII. Safety: Accident Prevention
VIII. False Statements Concerning Highway Projects
IX. Implementation of Clean Air Act and Federal Water Pollution Control Act
X. Compliance with Governmentwide Suspension and Debarment Requirements
XI. Certification Regarding Use of Contract Funds for Lobbying

ATTACHMENTS

A. Employment and Materials Preference for Appalachian Development Highway System or Appalachian Local Access Road Contracts (included in Appalachian contracts only)

I. GENERAL

1. Form FHWA-1273 must be physically incorporated in each construction contract funded under Title 23 (excluding emergency contracts solely intended for debris removal). The contractor (or subcontractor) must insert this form in each subcontract and further require its inclusion in all lower tier subcontracts (excluding purchase orders, rental agreements and other agreements for supplies or services).

The applicable requirements of Form FHWA-1273 are incorporated by reference for work done under any purchase order, rental agreement or agreement for other services. The prime contractor shall be responsible for compliance by any subcontractor, lower-tier subcontractor or service provider.

Form FHWA-1273 must be included in all Federal-aid design-build contracts, in all subcontracts and in lower tier subcontracts (excluding subcontracts for design services, purchase orders, rental agreements and other agreements for supplies or services). The design-builder shall be responsible for compliance by any subcontractor, lower-tier subcontractor or service provider.

Contracting agencies may reference Form FHWA-1273 in bid proposal or request for proposal documents, however, the Form FHWA-1273 must be physically incorporated (not referenced) in all contracts, subcontracts and lower-tier subcontracts (excluding purchase orders, rental agreements and other agreements for supplies or services related to a construction contract).

2. Subject to the applicability criteria noted in the following sections, these contract provisions shall apply to all work performed on the contract by the contractor's own organization and with the assistance of workers under the contractor's immediate superintendence and to all work performed on the contract by piecework, station work, or by subcontract.

3. A breach of any of the stipulations contained in these Required Contract Provisions may be sufficient grounds for withholding of progress payments, withholding of final payment, termination of the contract, suspension / debarment or any other action determined to be appropriate by the contracting agency and FHWA.

4. Selection of Labor: During the performance of this contract, the contractor shall not use convict labor for any purpose within the limits of a construction project on a Federal-aid highway unless it is labor performed by convicts who are on parole, supervised release, or probation. The term Federal-aid highway does not include roadways functionally classified as local roads or rural minor collectors.

II. NONDISCRIMINATION

The provisions of this section related to 23 CFR Part 230 are applicable to all Federal-aid construction contracts and to all related construction subcontracts of $10,000 or more. The provisions of 23 CFR Part 230 are not applicable to material supply, engineering, or architectural service contracts.

In addition, the contractor and all subcontractors must comply with the following policies: Executive Order 11246, 41 CFR 60, 29 CFR 1625-1627, Title 23 USC Section 140, the Rehabilitation Act of 1973, as amended (29 USC 794), Title VI of the Civil Rights Act of 1964, as amended, and related regulations including 49 CFR Parts 21, 26 and 27; and 23 CFR Parts 200, 230, and 633.

The contractor and all subcontractors must comply with: the requirements of the Equal Opportunity Clause in 41 CFR 60-1.4(b) and, for all construction contracts exceeding $10,000, the Standard Federal Equal Employment Opportunity Construction Contract Specifications in 41 CFR 60-4.3.

Note: The U.S. Department of Labor has exclusive authority to determine compliance with Executive Order 11246 and the policies of the Secretary of Labor including 41 CFR 60, and 29 CFR 1625-1627. The contracting agency and the FHWA have the authority and the responsibility to ensure compliance with Title 23 USC Section 140, the Rehabilitation Act of 1973, as amended (29 USC 794), and Title VI of the Civil Rights Act of 1964, as amended, and related regulations including 49 CFR Parts 21, 26 and 27; and 23 CFR Parts 200, 230, and 633.

The following provision is adopted from 23 CFR 230, Appendix A, with appropriate revisions to conform to the

U.S. Department of Labor (US DOL) and FHWA requirements.

1. Equal Employment Opportunity: Equal employment opportunity (EEO) requirements not to discriminate and to take affirmative action to assure equal opportunity as set forth under laws, executive orders, rules, regulations (28 CFR 35, 29 CFR 1630, 29 CFR 1625-1627, 41 CFR 60 and 49 CFR 27) and orders of the Secretary of Labor as modified by the provisions prescribed herein, and imposed pursuant to 23 U.S.C. 140 shall constitute the EEO and specific affirmative action standards for the contractor's project activities under this contract. The provisions of the Americans with Disabilities Act of 1990 (42 U.S.C. 12101 et seq.) set forth under 28 CFR 35 and 29 CFR 1630 are incorporated by reference in this contract. In the execution of this contract, the contractor agrees to comply with the following minimum specific requirement activities of EEO:

a. The contractor will work with the contracting agency and the Federal Government to ensure that it has made every good faith effort to provide equal opportunity with respect to all of its terms and conditions of employment and in their review of activities under the contract.

b. The contractor will accept as its operating policy the following statement:

"It is the policy of this Company to assure that applicants are employed, and that employees are treated during employment, without regard to their race, religion, sex, color, national origin, age or disability. Such action shall include: employment, upgrading, demotion, or transfer; recruitment or recruitment advertising; layoff or termination; rates of pay or other forms of compensation; and selection for training, including apprenticeship, pre-apprenticeship, and/or on-the-job training."

2. EEO Officer: The contractor will designate and make known to the contracting officers an EEO Officer who will have the responsibility for and must be capable of effectively administering and promoting an active EEO program and who must be assigned adequate authority and responsibility to do so.

3. Dissemination of Policy: All members of the contractor's staff who are authorized to hire, supervise, promote, and discharge employees, or who recommend such action, or who are substantially involved in such action, will be made fully cognizant of, and will implement, the contractor's EEO policy and contractual responsibilities to provide EEO in each grade and classification of employment. To ensure that the above agreement will be met, the following actions will be taken as a minimum:

a. Periodic meetings of supervisory and personnel office employees will be conducted before the start of work and then not less often than once every six months, at which time the contractor's EEO policy and its implementation will be reviewed and explained. The meetings will be conducted by the EEO Officer.

b. All new supervisory or personnel office employees will be given a thorough indoctrination by the EEO Officer, covering all major aspects of the contractor's EEO obligations within thirty days following their reporting for duty with the contractor.

c. All personnel who are engaged in direct recruitment for the project will be instructed by the EEO Officer in the contractor's procedures for locating and hiring minorities and women.

d. Notices and posters setting forth the contractor's EEO policy will be placed in areas readily accessible to employees, applicants for employment and potential employees.

e. The contractor's EEO policy and the procedures to implement such policy will be brought to the attention of employees by means of meetings, employee handbooks, or other appropriate means.

4. Recruitment: When advertising for employees, the contractor will include in all advertisements for employees the notation: "An Equal Opportunity Employer." All such advertisements will be placed in publications having a large circulation among minorities and women in the area from which the project workforce would normally be derived.

a. The contractor will, unless precluded by a valid bargaining agreement, conduct systematic and direct recruitment through public and private employee referral sources likely to yield qualified minorities and women. To meet this requirement, the contractor will identify sources of potential minority group employees, and establish with such identified sources procedures whereby minority and women applicants may be referred to the contractor for employment consideration.

b. In the event the contractor has a valid bargaining agreement providing for exclusive hiring hall referrals, the contractor is expected to observe the provisions of that agreement to the extent that the system meets the contractor's compliance with EEO contract provisions. Where implementation of such an agreement has the effect of discriminating against minorities or women, or obligates the contractor to do the same, such implementation violates Federal nondiscrimination provisions.

c. The contractor will encourage its present employees to refer minorities and women as applicants for employment. Information and procedures with regard to referring such applicants will be discussed with employees.

5. Personnel Actions: Wages, working conditions, and employee benefits shall be established and administered, and personnel actions of every type, including hiring, upgrading, promotion, transfer, demotion, layoff, and termination, shall be taken without regard to race, color, religion, sex, national origin, age or disability. The following procedures shall be followed:

a. The contractor will conduct periodic inspections of project sites to insure that working conditions and employee facilities do not indicate discriminatory treatment of project site personnel.

b. The contractor will periodically evaluate the spread of wages paid within each classification to determine any evidence of discriminatory wage practices.

c. The contractor will periodically review selected personnel actions in depth to determine whether there is evidence of discrimination. Where evidence is found, the contractor will promptly take corrective action. If the review indicates that the discrimination may extend beyond the actions reviewed, such corrective action shall include all affected persons.

d. The contractor will promptly investigate all complaints of alleged discrimination made to the contractor in connection with its obligations under this contract, will attempt to resolve such complaints, and will take appropriate corrective action within a reasonable time. If the investigation indicates that the discrimination may affect persons other than the complainant, such corrective action shall include such other persons. Upon completion of each investigation, the contractor will inform every complainant of all of their avenues of appeal.

6. Training and Promotion:

a. The contractor will assist in locating, qualifying, and increasing the skills of minorities and women who are applicants for employment or current employees. Such efforts should be aimed at developing full journey level status employees in the type of trade or job classification involved.

b. Consistent with the contractor's work force requirements and as permissible under Federal and State regulations, the contractor shall make full use of training programs, i.e., apprenticeship, and on-the-job training programs for the geographical area of contract performance. In the event a special provision for training is provided under this contract, this subparagraph will be superseded as indicated in the special provision. The contracting agency may reserve training positions for persons who receive welfare assistance in accordance with 23 U.S.C. 140(a).

c. The contractor will advise employees and applicants for employment of available training programs and entrance requirements for each.

d. The contractor will periodically review the training and promotion potential of employees who are minorities and women and will encourage eligible employees to apply for such training and promotion.

7. Unions: If the contractor relies in whole or in part upon unions as a source of employees, the contractor will use good faith efforts to obtain the cooperation of such unions to increase opportunities for minorities and women. Actions by the contractor, either directly or through a contractor's association acting as agent, will include the procedures set forth below:

a. The contractor will use good faith efforts to develop, in cooperation with the unions, joint training programs aimed toward qualifying more minorities and women for membership in the unions and increasing the skills of minorities and women so that they may qualify for higher paying employment.

b. The contractor will use good faith efforts to incorporate an EEO clause into each union agreement to the end that such union will be contractually bound to refer applicants without regard to their race, color, religion, sex, national origin, age or disability.

c. The contractor is to obtain information as to the referral practices and policies of the labor union except that to the extent such information is within the exclusive possession of the labor union and such labor union refuses to furnish such information to the contractor, the contractor shall so certify to the contracting agency and shall set forth what efforts have been made to obtain such information.

d. In the event the union is unable to provide the contractor with a reasonable flow of referrals within the time limit set forth in the collective bargaining agreement, the contractor will, through independent recruitment efforts, fill the employment vacancies without regard to race, color, religion, sex, national origin, age or disability; making full efforts to obtain qualified and/or qualifiable minorities and women. The failure of a union to provide sufficient referrals (even though it is obligated to provide exclusive referrals under the terms of a collective bargaining agreement) does not relieve the contractor from the requirements of this paragraph. In the event the union referral practice prevents the contractor from meeting the obligations pursuant to Executive Order 11246, as amended, and these special provisions, such contractor shall immediately notify the contracting agency.

8. Reasonable Accommodation for Applicants / Employees with Disabilities: The contractor must be familiar with the requirements for and comply with the Americans with Disabilities Act and all rules and regulations established there under. Employers must provide reasonable accommodation in all employment activities unless to do so would cause an undue hardship.

9. Selection of Subcontractors, Procurement of Materials and Leasing of Equipment: The contractor shall not discriminate on the grounds of race, color, religion, sex, national origin, age or disability in the selection and retention of subcontractors, including procurement of materials and leases of equipment. The contractor shall take all necessary and reasonable steps to ensure nondiscrimination in the administration of this contract.

a. The contractor shall notify all potential subcontractors and suppliers and lessors of their EEO obligations under this contract.

b. The contractor will use good faith efforts to ensure subcontractor compliance with their EEO obligations.

10. Assurance Required by 49 CFR 26.13(b):

a. The requirements of 49 CFR Part 26 and the State DOT's U.S. DOT-approved DBE program are incorporated by reference.

b. The contractor or subcontractor shall not discriminate on the basis of race, color, national origin, or sex in the performance of this contract. The contractor shall carry out applicable requirements of 49 CFR Part 26 in the award and administration of DOT-assisted contracts. Failure by the contractor to carry out these requirements is a material breach of this contract, which may result in the termination of this contract or such other remedy as the contracting agency deems appropriate.

11. Records and Reports: The contractor shall keep such records as necessary to document compliance with the EEO requirements. Such records shall be retained for a period of three years following the date of the final payment to the contractor for all contract work and shall be available at reasonable times and places for inspection by authorized representatives of the contracting agency and the FHWA.

a. The records kept by the contractor shall document the following:

(1) The number and work hours of minority and non-minority group members and women employed in each work classification on the project;

(2) The progress and efforts being made in cooperation with unions, when applicable, to increase employment opportunities for minorities and women; and

(3) The progress and efforts being made in locating, hiring, training, qualifying, and upgrading minorities and women;

b. The contractors and subcontractors will submit an annual report to the contracting agency each July for the duration of the project, indicating the number of minority, women, and non-minority group employees currently engaged in each work classification required by the contract work. This information is to be reported on Form FHWA-1391. The staffing data should represent the project work force on board in all or any part of the last payroll period preceding the end of July. If on-the-job training is being required by special provision, the contractor will be required to collect and report training data. The employment data should reflect the workforce on board during all or any part of the last payroll period preceding the end of July.

III. NONSEGREGATED FACILITIES

This provision is applicable to all Federal-aid construction contracts and to all related construction subcontracts of $10,000 or more.

The contractor must ensure that facilities provided for employees are provided in such a manner that segregation on the basis of race, color, religion, sex, or national origin cannot result. The contractor may neither require such segregated use by written or oral policies nor tolerate such use by employee custom. The contractor's obligation extends further to ensure that its employees are not assigned to perform their services at any location, under the contractor's control, where the facilities are segregated. The term "facilities" includes waiting rooms, work areas, restaurants and other eating areas, time clocks, restrooms, washrooms, locker rooms, and other storage or dressing areas, parking lots, drinking fountains, recreation or entertainment areas, transportation, and housing provided for employees. The contractor shall provide separate or single-user restrooms and necessary dressing or sleeping areas to assure privacy between sexes.

IV. DAVIS-BACON AND RELATED ACT PROVISIONS

This section is applicable to all Federal-aid construction projects exceeding $2,000 and to all related subcontracts and lower-tier subcontracts (regardless of subcontract size). The requirements apply to all projects located within the right-of-way of a roadway that is functionally classified as Federal-aid highway. This excludes roadways functionally classified as local roads or rural minor collectors, which are exempt. Contracting agencies may elect to apply these requirements to other projects.

The following provisions are from the U.S. Department of Labor regulations in 29 CFR 5.5 "Contract provisions and related matters" with minor revisions to conform to the FHWA-1273 format and FHWA program requirements.

1. Minimum wages

a. All laborers and mechanics employed or working upon the site of the work, will be paid unconditionally and not less often than once a week, and without subsequent deduction or rebate on any account (except such payroll deductions as are permitted by regulations issued by the Secretary of Labor under the Copeland Act (29 CFR part 3)), the full amount of wages and bona fide fringe benefits (or cash equivalents thereof) due at time of payment computed at rates not less than those contained in the wage determination of the Secretary of Labor which is attached hereto and made a part hereof, regardless of any contractual relationship which may be alleged to exist between the contractor and such laborers and mechanics.

Contributions made or costs reasonably anticipated for bona fide fringe benefits under section 1(b)(2) of the Davis-Bacon Act on behalf of laborers or mechanics are considered wages paid to such laborers or mechanics, subject to the provisions of paragraph 1.d. of this section; also, regular contributions made or costs incurred for more than a weekly period (but not less often than quarterly) under plans, funds, or programs which cover the particular weekly period, are deemed to be constructively made or incurred during such weekly period. Such laborers and mechanics shall be paid the appropriate wage rate and fringe benefits on the wage determination for the classification of work actually performed, without regard to skill, except as provided in 29 CFR 5.5(a)(4). Laborers or mechanics performing work in more than one classification may be compensated at the rate specified for each classification for the time actually worked therein: Provided, That the employer's payroll records accurately set forth the time spent in each classification in which work is performed. The wage determination (including any additional classification and wage rates conformed under paragraph 1.b. of this section) and the Davis-Bacon poster (WH–1321) shall be posted at all times by the contractor and its subcontractors at the site of the work in a prominent and accessible place where it can be easily seen by the workers.

b. (1) The contracting officer shall require that any class of laborers or mechanics, including helpers, which is not listed in the wage determination and which is to be employed under the contract shall be classified in conformance with the wage determination. The contracting officer shall approve an additional classification and wage rate and fringe benefits therefore only when the following criteria have been met:

(i) The work to be performed by the classification requested is not performed by a classification in the wage determination; and

(ii) The classification is utilized in the area by the construction industry; and

(iii) The proposed wage rate, including any bona fide fringe benefits, bears a reasonable relationship to the wage rates contained in the wage determination.

(2) If the contractor and the laborers and mechanics to be employed in the classification (if known), or their representatives, and the contracting officer agree on the classification and wage rate (including the amount designated for fringe benefits where appropriate), a report of the action taken shall be sent by the contracting officer to the Administrator of the Wage and Hour Division, Employment Standards Administration, U.S. Department of Labor, Washington, DC 20210. The Administrator, or an authorized representative, will approve, modify, or disapprove every additional classification action within 30 days of receipt and so advise the contracting officer or will notify the contracting officer within the 30-day period that additional time is necessary.

(3) In the event the contractor, the laborers or mechanics to be employed in the classification or their representatives, and the contracting officer do not agree on the proposed classification and wage rate (including the amount designated for fringe benefits, where appropriate), the contracting officer shall refer the questions, including the views of all interested parties and the recommendation of the contracting officer, to the Wage and Hour Administrator for determination. The Wage and Hour Administrator, or an authorized representative, will issue a determination within 30 days of receipt and so advise the contracting officer or will notify the contracting officer within the 30-day period that additional time is necessary.

(4) The wage rate (including fringe benefits where appropriate) determined pursuant to paragraphs 1.b.(2) or 1.b.(3) of this section, shall be paid to all workers performing work in the classification under this contract from the first day on which work is performed in the classification.

c. Whenever the minimum wage rate prescribed in the contract for a class of laborers or mechanics includes a fringe benefit which is not expressed as an hourly rate, the contractor shall either pay the benefit as stated in the wage determination or shall pay another bona fide fringe benefit or an hourly cash equivalent thereof.

d. If the contractor does not make payments to a trustee or other third person, the contractor may consider as part of the wages of any laborer or mechanic the amount of any costs reasonably anticipated in providing bona fide fringe benefits under a plan or program, Provided, That the Secretary of Labor has found, upon the written request of the contractor, that the applicable standards of the Davis-Bacon Act have been met. The Secretary of Labor may require the contractor to set aside in a separate account assets for the meeting of obligations under the plan or program.

2. Withholding

The contracting agency shall upon its own action or upon written request of an authorized representative of the Department of Labor, withhold or cause to be withheld from the contractor under this contract, or any other Federal contract with the same prime contractor, or any other federally-assisted contract subject to Davis-Bacon prevailing wage requirements, which is held by the same prime contractor, so much of the accrued payments or advances as may be considered necessary to pay laborers and mechanics, including apprentices, trainees, and helpers, employed by the contractor or any subcontractor the full amount of wages required by the contract. In the event of failure to pay any laborer or mechanic, including any apprentice, trainee, or helper, employed or working on the site of the work, all or part of the wages required by the contract, the contracting agency may, after written notice to the contractor, take such action as may be necessary to cause the suspension of any further payment, advance, or guarantee of funds until such violations have ceased.

3. Payrolls and basic records

a. Payrolls and basic records relating thereto shall be maintained by the contractor during the course of the work and preserved for a period of three years thereafter for all laborers and mechanics working at the site of the work. Such records shall contain the name, address, and social security number of each such worker, his or her correct classification, hourly rates of wages paid (including rates of contributions or costs anticipated for bona fide fringe benefits or cash equivalents thereof of the types described in section 1(b)(2)(B) of the Davis-Bacon Act), daily and weekly number of hours worked, deductions made and actual wages paid. Whenever the Secretary of Labor has found under 29 CFR 5.5(a)(1)(iv) that the wages of any laborer or mechanic include the amount of any costs reasonably anticipated in providing benefits under a plan or program described in section 1(b)(2)(B) of the Davis-Bacon Act, the contractor shall maintain records which show that the commitment to provide such benefits is enforceable, that the plan or program is financially responsible, and that the plan or program has been communicated in writing to the laborers or mechanics affected, and records which show the costs anticipated or the actual cost incurred in providing such benefits. Contractors employing apprentices or trainees under approved programs shall maintain written evidence of the registration of apprenticeship programs and certification of trainee programs, the registration of the apprentices and trainees, and the ratios and wage rates prescribed in the applicable programs.

b. (1) The contractor shall submit weekly for each week in which any contract work is performed a copy of all payrolls to the contracting agency. The payrolls submitted shall set out accurately and completely all of the information required to be maintained under 29 CFR 5.5(a)(3)(i), except that full social security numbers and home addresses shall not be included on weekly transmittals. Instead the payrolls shall only need to include an individually identifying number for each employee (e.g., the last four digits of the

employee's social security number). The required weekly payroll information may be submitted in any form desired. Optional Form WH–347 is available for this purpose from the Wage and Hour Division Web site at http://www.dol.gov/esa/whd/forms/wh347instr.htm or its successor site. The prime contractor is responsible for the submission of copies of payrolls by all subcontractors. Contractors and subcontractors shall maintain the full social security number and current address of each covered worker, and shall provide them upon request to the contracting agency for transmission to the State DOT, the FHWA or the Wage and Hour Division of the Department of Labor for purposes of an investigation or audit of compliance with prevailing wage requirements. It is not a violation of this section for a prime contractor to require a subcontractor to provide addresses and social security numbers to the prime contractor for its own records, without weekly submission to the contracting agency.

(2) Each payroll submitted shall be accompanied by a "Statement of Compliance," signed by the contractor or subcontractor or his or her agent who pays or supervises the payment of the persons employed under the contract and shall certify the following:

(i) That the payroll for the payroll period contains the information required to be provided under §5.5 (a)(3)(ii) of Regulations, 29 CFR part 5, the appropriate information is being maintained under §5.5 (a)(3)(i) of Regulations, 29 CFR part 5, and that such information is correct and complete;

(ii) That each laborer or mechanic (including each helper, apprentice, and trainee) employed on the contract during the payroll period has been paid the full weekly wages earned, without rebate, either directly or indirectly, and that no deductions have been made either directly or indirectly from the full wages earned, other than permissible deductions as set forth in Regulations, 29 CFR part 3;

(iii) That each laborer or mechanic has been paid not less than the applicable wage rates and fringe benefits or cash equivalents for the classification of work performed, as specified in the applicable wage determination incorporated into the contract.

(3) The weekly submission of a properly executed certification set forth on the reverse side of Optional Form WH–347 shall satisfy the requirement for submission of the "Statement of Compliance" required by paragraph 3.b.(2) of this section.

(4) The falsification of any of the above certifications may subject the contractor or subcontractor to civil or criminal prosecution under section 1001 of title 18 and section 231 of title 31 of the United States Code.

c. The contractor or subcontractor shall make the records required under paragraph 3.a. of this section available for inspection, copying, or transcription by authorized representatives of the contracting agency, the State DOT, the FHWA, or the Department of Labor, and shall permit such representatives to interview employees during working hours on the job. If the contractor or subcontractor fails to submit the required records or to make them available, the FHWA may, after written notice to the contractor, the contracting agency or the State DOT, take such action as may be necessary to cause the suspension of any further payment, advance, or guarantee of funds. Furthermore, failure to submit the required records upon request or to make such records available may be grounds for debarment action pursuant to 29 CFR 5.12.

4. Apprentices and trainees

a. Apprentices (programs of the USDOL).

Apprentices will be permitted to work at less than the predetermined rate for the work they performed when they are employed pursuant to and individually registered in a bona fide apprenticeship program registered with the U.S. Department of Labor, Employment and Training Administration, Office of Apprenticeship Training, Employer and Labor Services, or with a State Apprenticeship Agency recognized by the Office, or if a person is employed in his or her first 90 days of probationary employment as an apprentice in such an apprenticeship program, who is not individually registered in the program, but who has been certified by the Office of Apprenticeship Training, Employer and Labor Services or a State Apprenticeship Agency (where appropriate) to be eligible for probationary employment as an apprentice.

The allowable ratio of apprentices to journeymen on the job site in any craft classification shall not be greater than the ratio permitted to the contractor as to the entire workforce under the registered program. Any worker listed on a payroll at an apprentice wage rate, who is not registered or otherwise employed as stated above, shall be paid not less than the applicable wage rate on the wage determination for the classification of work actually performed. In addition, any apprentice performing work on the job site in excess of the ratio permitted under the registered program shall be paid not less than the applicable wage rate on the wage determination for the work actually performed. Where a contractor is performing construction on a project in a locality other than that in which its program is registered, the ratios and wage rates (expressed in percentages of the journeyman's hourly rate) specified in the contractor's or subcontractor's registered program shall be observed.

Every apprentice must be paid at not less than the rate specified in the registered program for the apprentice's level of progress, expressed as a percentage of the journeymen hourly rate specified in the applicable wage determination. Apprentices shall be paid fringe benefits in accordance with the provisions of the apprenticeship program. If the apprenticeship program does not specify fringe benefits, apprentices must be paid the full amount of fringe benefits listed on the wage determination for the applicable classification. If the Administrator determines that a different

practice prevails for the applicable apprentice classification, fringes shall be paid in accordance with that determination.

In the event the Office of Apprenticeship Training, Employer and Labor Services, or a State Apprenticeship Agency recognized by the Office, withdraws approval of an apprenticeship program, the contractor will no longer be permitted to utilize apprentices at less than the applicable predetermined rate for the work performed until an acceptable program is approved.

b. Trainees (programs of the USDOL).

Except as provided in 29 CFR 5.16, trainees will not be permitted to work at less than the predetermined rate for the work performed unless they are employed pursuant to and individually registered in a program which has received prior approval, evidenced by formal certification by the U.S. Department of Labor, Employment and Training Administration.

The ratio of trainees to journeymen on the job site shall not be greater than permitted under the plan approved by the Employment and Training Administration.

Every trainee must be paid at not less than the rate specified in the approved program for the trainee's level of progress, expressed as a percentage of the journeyman hourly rate specified in the applicable wage determination. Trainees shall be paid fringe benefits in accordance with the provisions of the trainee program. If the trainee program does not mention fringe benefits, trainees shall be paid the full amount of fringe benefits listed on the wage determination unless the Administrator of the Wage and Hour Division determines that there is an apprenticeship program associated with the corresponding journeyman wage rate on the wage determination which provides for less than full fringe benefits for apprentices. Any employee listed on the payroll at a trainee rate who is not registered and participating in a training plan approved by the Employment and Training Administration shall be paid not less than the applicable wage rate on the wage determination for the classification of work actually performed. In addition, any trainee performing work on the job site in excess of the ratio permitted under the registered program shall be paid not less than the applicable wage rate on the wage determination for the work actually performed.

In the event the Employment and Training Administration withdraws approval of a training program, the contractor will no longer be permitted to utilize trainees at less than the applicable predetermined rate for the work performed until an acceptable program is approved.

c. Equal employment opportunity. The utilization of apprentices, trainees and journeymen under this part shall be in conformity with the equal employment opportunity requirements of Executive Order 11246, as amended, and 29 CFR part 30.

d. Apprentices and Trainees (programs of the U.S. DOT).

Apprentices and trainees working under apprenticeship and skill training programs which have been certified by the Secretary of Transportation as promoting EEO in connection with Federal-aid highway construction programs are not subject to the requirements of paragraph 4 of this Section IV. The straight time hourly wage rates for apprentices and trainees under such programs will be established by the particular programs. The ratio of apprentices and trainees to journeymen shall not be greater than permitted by the terms of the particular program.

5. Compliance with Copeland Act requirements. The contractor shall comply with the requirements of 29 CFR part 3, which are incorporated by reference in this contract.

6. Subcontracts. The contractor or subcontractor shall insert Form FHWA-1273 in any subcontracts and also require the subcontractors to include Form FHWA-1273 in any lower tier subcontracts. The prime contractor shall be responsible for the compliance by any subcontractor or lower tier subcontractor with all the contract clauses in 29 CFR 5.5.

7. Contract termination: debarment. A breach of the contract clauses in 29 CFR 5.5 may be grounds for termination of the contract, and for debarment as a contractor and a subcontractor as provided in 29 CFR 5.12.

8. Compliance with Davis-Bacon and Related Act requirements. All rulings and interpretations of the Davis-Bacon and Related Acts contained in 29 CFR parts 1, 3, and 5 are herein incorporated by reference in this contract.

9. Disputes concerning labor standards. Disputes arising out of the labor standards provisions of this contract shall not be subject to the general disputes clause of this contract. Such disputes shall be resolved in accordance with the procedures of the Department of Labor set forth in 29 CFR parts 5, 6, and 7. Disputes within the meaning of this clause include disputes between the contractor (or any of its subcontractors) and the contracting agency, the U.S. Department of Labor, or the employees or their representatives.

10. Certification of eligibility.

a. By entering into this contract, the contractor certifies that neither it (nor he or she) nor any person or firm who has an interest in the contractor's firm is a person or firm ineligible to be awarded Government contracts by virtue of section 3(a) of the Davis-Bacon Act or 29 CFR 5.12(a)(1).

b. No part of this contract shall be subcontracted to any person or firm ineligible for award of a Government contract by virtue of section 3(a) of the Davis-Bacon Act or 29 CFR 5.12(a)(1).

c. The penalty for making false statements is prescribed in the U.S. Criminal Code, 18 U.S.C. 1001.

V. CONTRACT WORK HOURS AND SAFETY STANDARDS ACT

The following clauses apply to any Federal-aid construction contract in an amount in excess of $100,000 and subject to the overtime provisions of the Contract Work Hours and Safety Standards Act. These clauses shall be inserted in addition to the clauses required by 29 CFR 5.5(a) or 29 CFR 4.6. As used in this paragraph, the terms laborers and mechanics include watchmen and guards.

1. Overtime requirements. No contractor or subcontractor contracting for any part of the contract work which may require or involve the employment of laborers or mechanics shall require or permit any such laborer or mechanic in any workweek in which he or she is employed on such work to work in excess of forty hours in such workweek unless such laborer or mechanic receives compensation at a rate not less than one and one-half times the basic rate of pay for all hours worked in excess of forty hours in such workweek.

2. Violation; liability for unpaid wages; liquidated damages. In the event of any violation of the clause set forth in paragraph (1.) of this section, the contractor and any subcontractor responsible therefor shall be liable for the unpaid wages. In addition, such contractor and subcontractor shall be liable to the United States (in the case of work done under contract for the District of Columbia or a territory, to such District or to such territory), for liquidated damages. Such liquidated damages shall be computed with respect to each individual laborer or mechanic, including watchmen and guards, employed in violation of the clause set forth in paragraph (1.) of this section, in the sum of $10 for each calendar day on which such individual was required or permitted to work in excess of the standard workweek of forty hours without payment of the overtime wages required by the clause set forth in paragraph (1.) of this section.

3. Withholding for unpaid wages and liquidated damages. The FHWA or the contacting agency shall upon its own action or upon written request of an authorized representative of the Department of Labor withhold or cause to be withheld, from any moneys payable on account of work performed by the contractor or subcontractor under any such contract or any other Federal contract with the same prime contractor, or any other federally-assisted contract subject to the Contract Work Hours and Safety Standards Act, which is held by the same prime contractor, such sums as may be determined to be necessary to satisfy any liabilities of such contractor or subcontractor for unpaid wages and liquidated damages as provided in the clause set forth in paragraph (2.) of this section.

4. Subcontracts. The contractor or subcontractor shall insert in any subcontracts the clauses set forth in paragraph (1.) through (4.) of this section and also a clause requiring the subcontractors to include these clauses in any lower tier subcontracts. The prime contractor shall be responsible for compliance by any subcontractor or lower tier subcontractor with the clauses set forth in paragraphs (1.) through (4.) of this section.

VI. SUBLETTING OR ASSIGNING THE CONTRACT

This provision is applicable to all Federal-aid construction contracts on the National Highway System.

1. The contractor shall perform with its own organization contract work amounting to not less than 30 percent (or a greater percentage if specified elsewhere in the contract) of the total original contract price, excluding any specialty items designated by the contracting agency. Specialty items may be performed by subcontract and the amount of any such specialty items performed may be deducted from the total original contract price before computing the amount of work required to be performed by the contractor's own organization (23 CFR 635.116).

a. The term "perform work with its own organization" refers to workers employed or leased by the prime contractor, and equipment owned or rented by the prime contractor, with or without operators. Such term does not include employees or equipment of a subcontractor or lower tier subcontractor, agents of the prime contractor, or any other assignees. The term may include payments for the costs of hiring leased employees from an employee leasing firm meeting all relevant Federal and State regulatory requirements. Leased employees may only be included in this term if the prime contractor meets all of the following conditions:

(1) the prime contractor maintains control over the supervision of the day-to-day activities of the leased employees;

(2) the prime contractor remains responsible for the quality of the work of the leased employees;

(3) the prime contractor retains all power to accept or exclude individual employees from work on the project; and

(4) the prime contractor remains ultimately responsible for the payment of predetermined minimum wages, the submission of payrolls, statements of compliance and all other Federal regulatory requirements.

b. "Specialty Items" shall be construed to be limited to work that requires highly specialized knowledge, abilities, or equipment not ordinarily available in the type of contracting organizations qualified and expected to bid or propose on the contract as a whole and in general are to be limited to minor components of the overall contract.

2. The contract amount upon which the requirements set forth in paragraph (1) of Section VI is computed includes the cost of material and manufactured products which are to be purchased or produced by the contractor under the contract provisions.

3. The contractor shall furnish (a) a competent superintendent or supervisor who is employed by the firm, has full authority to direct performance of the work in accordance with the contract requirements, and is in charge of all construction operations (regardless of who performs the work) and (b) such other of its own organizational resources (supervision, management, and engineering services) as the contracting officer determines is necessary to assure the performance of the contract.

4. No portion of the contract shall be sublet, assigned or otherwise disposed of except with the written consent of the contracting officer, or authorized representative, and such consent when given shall not be construed to relieve the contractor of any responsibility for the fulfillment of the contract. Written consent will be given only after the contracting agency has assured that each subcontract is evidenced in writing and that it contains all pertinent provisions and requirements of the prime contract.

5. The 30% self-performance requirement of paragraph (1) is not applicable to design-build contracts; however, contracting agencies may establish their own self-performance requirements.

VII. SAFETY: ACCIDENT PREVENTION

This provision is applicable to all Federal-aid construction contracts and to all related subcontracts.

1. In the performance of this contract the contractor shall comply with all applicable Federal, State, and local laws governing safety, health, and sanitation (23 CFR 635). The contractor shall provide all safeguards, safety devices and protective equipment and take any other needed actions as it determines, or as the contracting officer may determine, to be reasonably necessary to protect the life and health of employees on the job and the safety of the public and to protect property in connection with the performance of the work covered by the contract.

2. It is a condition of this contract, and shall be made a condition of each subcontract, which the contractor enters into pursuant to this contract, that the contractor and any subcontractor shall not permit any employee, in performance of the contract, to work in surroundings or under conditions which are unsanitary, hazardous or dangerous to his/her health or safety, as determined under construction safety and health standards (29 CFR 1926) promulgated by the Secretary of Labor, in accordance with Section 107 of the Contract Work Hours and Safety Standards Act (40 U.S.C. 3704).

3. Pursuant to 29 CFR 1926.3, it is a condition of this contract that the Secretary of Labor or authorized representative thereof, shall have right of entry to any site of contract performance to inspect or investigate the matter of compliance with the construction safety and health standards and to carry out the duties of the Secretary under Section 107 of the Contract Work Hours and Safety Standards Act (40 U.S.C.3704).

VIII. FALSE STATEMENTS CONCERNING HIGHWAY PROJECTS

This provision is applicable to all Federal-aid construction contracts and to all related subcontracts.

In order to assure high quality and durable construction in conformity with approved plans and specifications and a high degree of reliability on statements and representations made by engineers, contractors, suppliers, and workers on Federal-aid highway projects, it is essential that all persons concerned with the project perform their functions as carefully, thoroughly, and honestly as possible. Willful falsification, distortion, or misrepresentation with respect to any facts related to the project is a violation of Federal law. To prevent any misunderstanding regarding the seriousness of these and similar acts, Form FHWA-1022 shall be posted on each Federal-aid highway project (23 CFR 635) in one or more places where it is readily available to all persons concerned with the project:

18 U.S.C. 1020 reads as follows:

"Whoever, being an officer, agent, or employee of the United States, or of any State or Territory, or whoever, whether a person, association, firm, or corporation, knowingly makes any false statement, false representation, or false report as to the character, quality, quantity, or cost of the material used or to be used, or the quantity or quality of the work performed or to be performed, or the cost thereof in connection with the submission of plans, maps, specifications, contracts, or costs of construction on any highway or related project submitted for approval to the Secretary of Transportation; or

Whoever knowingly makes any false statement, false representation, false report or false claim with respect to the character, quality, quantity, or cost of any work performed or to be performed, or materials furnished or to be furnished, in connection with the construction of any highway or related project approved by the Secretary of Transportation; or

Whoever knowingly makes any false statement or false representation as to material fact in any statement, certificate, or report submitted pursuant to provisions of the Federal-aid Roads Act approved July 1, 1916, (39 Stat. 355), as amended and supplemented;

Shall be fined under this title or imprisoned not more than 5 years or both."

IX. IMPLEMENTATION OF CLEAN AIR ACT AND FEDERAL WATER POLLUTION CONTROL ACT

This provision is applicable to all Federal-aid construction contracts and to all related subcontracts.

By submission of this bid/proposal or the execution of this contract, or subcontract, as appropriate, the bidder, proposer, Federal-aid construction contractor, or subcontractor, as appropriate, will be deemed to have stipulated as follows:

1. That any person who is or will be utilized in the performance of this contract is not prohibited from receiving an award due to a violation of Section 508 of the Clean Water Act or Section 306 of the Clean Air Act.
2. That the contractor agrees to include or cause to be included the requirements of paragraph (1) of this Section X in every subcontract, and further agrees to take such action as the contracting agency may direct as a means of enforcing such requirements.

X. CERTIFICATION REGARDING DEBARMENT, SUSPENSION, INELIGIBILITY AND VOLUNTARY EXCLUSION

This provision is applicable to all Federal-aid construction contracts, design-build contracts, subcontracts, lower-tier subcontracts, purchase orders, lease agreements, consultant contracts or any other covered transaction requiring FHWA approval or that is estimated to cost $25,000 or more – as defined in 2 CFR Parts 180 and 1200.

1**. Instructions for Certification – First Tier Participants:**

a. By signing and submitting this proposal, the prospective first tier participant is providing the certification set out below.

b. The inability of a person to provide the certification set out below will not necessarily result in denial of participation in this covered transaction. The prospective first tier participant shall submit an explanation of why it cannot provide the certification set out below. The certification or explanation will be considered in connection with the department or agency's determination whether to enter into this transaction. However, failure of the prospective first tier participant to furnish a certification or an explanation shall disqualify such a person from participation in this transaction.

c. The certification in this clause is a material representation of fact upon which reliance was placed when the contracting agency determined to enter into this transaction. If it is later determined that the prospective participant knowingly rendered an erroneous certification, in addition to other remedies available to the Federal Government, the contracting agency may terminate this transaction for cause of default.

d. The prospective first tier participant shall provide immediate written notice to the contracting agency to whom this proposal is submitted if any time the prospective first tier participant learns that its certification was erroneous when submitted or has become erroneous by reason of changed circumstances.

e. The terms "covered transaction," "debarred," "suspended," "ineligible," "participant," "person," "principal," and "voluntarily excluded," as used in this clause, are defined in 2 CFR Parts 180 and 1200. "First Tier Covered Transactions" refers to any covered transaction between a grantee or subgrantee of Federal funds and a participant (such as the prime or general contract). "Lower Tier Covered Transactions" refers to any covered transaction under a First Tier Covered Transaction (such as subcontracts). "First Tier Participant" refers to the participant who has entered into a covered transaction with a grantee or subgrantee of Federal funds (such as the prime or general contractor). "Lower Tier Participant" refers any participant who has entered into a covered transaction with a First Tier Participant or other Lower Tier Participants (such as subcontractors and suppliers).

f. The prospective first tier participant agrees by submitting this proposal that, should the proposed covered transaction be entered into, it shall not knowingly enter into any lower tier covered transaction with a person who is debarred, suspended, declared ineligible, or voluntarily excluded from participation in this covered transaction, unless authorized by the department or agency entering into this transaction.

g. The prospective first tier participant further agrees by submitting this proposal that it will include the clause titled "Certification Regarding Debarment, Suspension, Ineligibility and Voluntary Exclusion-Lower Tier Covered Transactions," provided by the department or contracting agency, entering into this covered transaction, without modification, in all lower tier covered transactions and in all solicitations for lower tier covered transactions exceeding the $25,000 threshold.

h. A participant in a covered transaction may rely upon a certification of a prospective participant in a lower tier covered transaction that is not debarred, suspended, ineligible, or voluntarily excluded from the covered transaction, unless it knows that the certification is erroneous. A participant is responsible for ensuring that its principals are not suspended, debarred, or otherwise ineligible to participate in covered transactions. To verify the eligibility of its principals, as well as the eligibility of any lower tier prospective participants, each participant may, but is not required to, check the Excluded Parties List System website (https://www.epls.gov/), which is compiled by the General Services Administration.

i. Nothing contained in the foregoing shall be construed to require the establishment of a system of records in order to render in good faith the certification required by this clause. The knowledge and information of the prospective participant is not required to exceed that which is normally possessed by a prudent person in the ordinary course of business dealings.

j. Except for transactions authorized under paragraph (f) of these instructions, if a participant in a covered transaction knowingly enters into a lower tier covered transaction with a person who is suspended, debarred, ineligible, or voluntarily excluded from participation in this transaction, in addition to other remedies available to the Federal Government, the department or agency may terminate this transaction for cause or default.

* * * * *

2. Certification Regarding Debarment, Suspension, Ineligibility and Voluntary Exclusion – First Tier Participants:

a. The prospective first tier participant certifies to the best of its knowledge and belief, that it and its principals:

(1) Are not presently debarred, suspended, proposed for debarment, declared ineligible, or voluntarily excluded from participating in covered transactions by any Federal department or agency;

(2) Have not within a three-year period preceding this proposal been convicted of or had a civil judgment rendered against them for commission of fraud or a criminal offense in connection with obtaining, attempting to obtain, or performing a public (Federal, State or local) transaction or contract under a public transaction; violation of Federal or State antitrust statutes or commission of embezzlement, theft, forgery, bribery, falsification or destruction of records, making false statements, or receiving stolen property;

(3) Are not presently indicted for or otherwise criminally or civilly charged by a governmental entity (Federal, State or local) with commission of any of the offenses enumerated in paragraph (a)(2) of this certification; and

(4) Have not within a three-year period preceding this application/proposal had one or more public transactions (Federal, State or local) terminated for cause or default.

b. Where the prospective participant is unable to certify to any of the statements in this certification, such prospective participant shall attach an explanation to this proposal.

2. **Instructions for Certification - Lower Tier Participants:**

(Applicable to all subcontracts, purchase orders and other lower tier transactions requiring prior FHWA approval or estimated to cost $25,000 or more - 2 CFR Parts 180 and 1200)

a. By signing and submitting this proposal, the prospective lower tier is providing the certification set out below.

b. The certification in this clause is a material representation of fact upon which reliance was placed when this transaction was entered into. If it is later determined that the prospective lower tier participant knowingly rendered an erroneous certification, in addition to other remedies available to the Federal Government, the department, or agency with which this transaction originated may pursue available remedies, including suspension and/or debarment.

c. The prospective lower tier participant shall provide immediate written notice to the person to which this proposal is submitted if at any time the prospective lower tier participant learns that its certification was erroneous by reason of changed circumstances.

d. The terms "covered transaction," "debarred," "suspended," "ineligible," "participant," "person," "principal," and "voluntarily excluded," as used in this clause, are defined in 2 CFR Parts 180 and 1200. You may contact the person to which this proposal is submitted for assistance in obtaining a copy of those regulations. "First Tier Covered Transactions" refers to any covered transaction between a grantee or subgrantee of Federal funds and a participant (such as the prime or general contract). "Lower Tier Covered Transactions" refers to any covered transaction under a First Tier Covered Transaction (such as subcontracts). "First Tier Participant" refers to the participant who has entered into a covered transaction with a grantee or subgrantee of Federal funds (such as the prime or general contractor). "Lower Tier Participant" refers any participant who has entered into a covered transaction with a First Tier Participant or other Lower Tier Participants (such as subcontractors and suppliers).

e. The prospective lower tier participant agrees by submitting this proposal that, should the proposed covered transaction be entered into, it shall not knowingly enter into any lower tier covered transaction with a person who is debarred, suspended, declared ineligible, or voluntarily excluded from participation in this covered transaction, unless authorized by the department or agency with which this transaction originated.

f. The prospective lower tier participant further agrees by submitting this proposal that it will include this clause titled "Certification Regarding Debarment, Suspension, Ineligibility and Voluntary Exclusion-Lower Tier Covered Transaction," without modification, in all lower tier covered transactions and in all solicitations for lower tier covered transactions exceeding the $25,000 threshold.

g. A participant in a covered transaction may rely upon a certification of a prospective participant in a lower tier covered transaction that is not debarred, suspended, ineligible, or voluntarily excluded from the covered transaction, unless it knows that the certification is erroneous. A participant is responsible for ensuring that its principals are not suspended, debarred, or otherwise ineligible to participate in covered transactions. To verify the eligibility of its principals, as well as the eligibility of any lower tier prospective participants, each participant may, but is not required to, check the Excluded Parties List System website (https://www.epls.gov/), which is compiled by the General Services Administration.

h. Nothing contained in the foregoing shall be construed to require establishment of a system of records in order to render in good faith the certification required by this clause. The knowledge and information of participant is not required to exceed that which is normally possessed by a prudent person in the ordinary course of business dealings.

i. Except for transactions authorized under paragraph e of these instructions, if a participant in a covered transaction knowingly enters into a lower tier covered transaction with a person who is suspended, debarred, ineligible, or voluntarily excluded from participation in this transaction, in addition to other remedies available to the Federal Government, the department or agency with which this transaction originated may pursue available remedies, including suspension and/or debarment.

* * * * *

Certification Regarding Debarment, Suspension, Ineligibility and Voluntary Exclusion--Lower Tier Participants:

1. The prospective lower tier participant certifies, by submission of this proposal, that neither it nor its principals is presently debarred, suspended, proposed for debarment, declared ineligible, or voluntarily excluded from participating in covered transactions by any Federal department or agency.

2. Where the prospective lower tier participant is unable to certify to any of the statements in this certification, such prospective participant shall attach an explanation to this proposal.

* * * * *

XI. CERTIFICATION REGARDING USE OF CONTRACT FUNDS FOR LOBBYING

This provision is applicable to all Federal-aid construction contracts and to all related subcontracts which exceed $100,000 (49 CFR 20).

1. The prospective participant certifies, by signing and submitting this bid or proposal, to the best of his or her knowledge and belief, that:

a. No Federal appropriated funds have been paid or will be paid, by or on behalf of the undersigned, to any person for influencing or attempting to influence an officer or

employee of any Federal agency, a Member of Congress, an officer or employee of Congress, or an employee of a Member of Congress in connection with the awarding of any Federal contract, the making of any Federal grant, the making of any Federal loan, the entering into of any cooperative agreement, and the extension, continuation, renewal, amendment, or modification of any Federal contract, grant, loan, or cooperative agreement.

b. If any funds other than Federal appropriated funds have been paid or will be paid to any person for influencing or attempting to influence an officer or employee of any Federal agency, a Member of Congress, an officer or employee of Congress, or an employee of a Member of Congress in connection with this Federal contract, grant, loan, or cooperative agreement, the undersigned shall complete and submit Standard Form-LLL, "Disclosure Form to Report Lobbying," in accordance with its instructions.

2. This certification is a material representation of fact upon which reliance was placed when this transaction was made or entered into. Submission of this certification is a prerequisite for making or entering into this transaction imposed by 31 U.S.C. 1352. Any person who fails to file the required certification shall be subject to a civil penalty of not less than $10,000 and not more than $100,000 for each such failure.

3. The prospective participant also agrees by submitting its bid or proposal that the participant shall require that the language of this certification be included in all lower tier subcontracts, which exceed $100,000 and that all such recipients shall certify and disclose accordingly.

ATTACHMENT A - EMPLOYMENT AND MATERIALS PREFERENCE FOR APPALACHIAN DEVELOPMENT HIGHWAY SYSTEM OR APPALACHIAN LOCAL ACCESS ROAD CONTRACTS

This provision is applicable to all Federal-aid projects funded under the Appalachian Regional Development Act of 1965.

1. During the performance of this contract, the contractor undertaking to do work which is, or reasonably may be, done as on-site work, shall give preference to qualified persons who regularly reside in the labor area as designated by the DOL wherein the contract work is situated, or the subregion, or the Appalachian counties of the State wherein the contract work is situated, except:

a. To the extent that qualified persons regularly residing in the area are not available.

b. For the reasonable needs of the contractor to employ supervisory or specially experienced personnel necessary to assure an efficient execution of the contract work.

c. For the obligation of the contractor to offer employment to present or former employees as the result of a lawful collective bargaining contract, provided that the number of nonresident persons employed under this subparagraph (1c) shall not exceed 20 percent of the total number of employees employed by the contractor on the contract work, except as provided in subparagraph (4) below.

2. The contractor shall place a job order with the State Employment Service indicating (a) the classifications of the laborers, mechanics and other employees required to perform the contract work, (b) the number of employees required in each classification, (c) the date on which the participant estimates such employees will be required, and (d) any other pertinent information required by the State Employment Service to complete the job order form. The job order may be placed with the State Employment Service in writing or by telephone. If during the course of the contract work, the information submitted by the contractor in the original job order is substantially modified, the participant shall promptly notify the State Employment Service.

3. The contractor shall give full consideration to all qualified job applicants referred to him by the State Employment Service. The contractor is not required to grant employment to any job applicants who, in his opinion, are not qualified to perform the classification of work required.

4. If, within one week following the placing of a job order by the contractor with the State Employment Service, the State Employment Service is unable to refer any qualified job applicants to the contractor, or less than the number requested, the State Employment Service will forward a certificate to the contractor indicating the unavailability of applicants. Such certificate shall be made a part of the contractor's permanent project records. Upon receipt of this certificate, the contractor may employ persons who do not normally reside in the labor area to fill positions covered by the certificate, notwithstanding the provisions of subparagraph (1c) above.

5. The provisions of 23 CFR 633.207(e) allow the contracting agency to provide a contractual preference for

ATTACHMENT 3 TO EXHIBIT 8

GDOT Special Provision
Modifications to FHWA Form 1273

1. Subsections IV.3(a); Delete the wording referencing "social security number" in the second sentence and substitute "and the last four digits of the social security number".

ATTACHMENT 4 TO EXHIBIT 8

FEDERAL PREVAILING WAGE RATE

(Subject to change)

DEPARTMENT OF TRANSPORTATION STATE OF GEORGIA
U. S. Department of Labor
General Decision Number: GA190250 01/04/2019 GA250
Superseded General Decision Number: GA20180262

State: Georgia

Construction Type: Highway

County: Hall County in Georgia.

HIGHWAY CONSTRUCTION PROJECTS

Note: Under Executive Order (EO) 13658, an hourly minimum wage of $10.60 for calendar year 2019 applies to all contracts subject to the Davis-Bacon Act for which the contract is awarded (and any solicitation was issued) on or after January 1, 2015. If this contract is covered by the EO, the contractor must pay all workers in any classification listed on this wage determination at least $10.60 per hour (or the applicable wage rate listed on this wage determination, if it is higher) for all hours spent performing on the contract in calendar year 2019. If this contract is covered by the EO and a classification considered necessary for performance of work on the contract does not appear on this wage determination, the contractor must pay workers in that classification at least the wage rate determined through the conformance process set forth in 29 CFR 5.5(a)(1)(ii) (or the EO minimum wage rate, if it is higher than the conformed wage rate). The EO minimum wage rate will be adjusted annually. Please note that this EO applies to the above-mentioned types of contracts entered into by the federal government that are subject to the Davis-Bacon Act itself, but it does not apply to contracts subject only to the Davis-Bacon Related Acts, including those set forth at 29 CFR 5.1(a)(2)-(60). Additional information on contractor requirements and worker protections under the EO is available at www.dol.gov/whd/govcontracts.

Modification Number	Publication Date
0	01/04/2019

SUGA2014-084 10/03/2016

	Rates	Fringes
CARPENTER, Includes Form Work....	$ 14.06	2.83
CEMENT MASON/CONCRETE FINISHER...	$ 14.55	0.00
HIGHWAY/PARKING LOT STRIPING:		
Operator (Striping Machine).....	$ 12.34	1.99

IRONWORKER, REINFORCING	$ 14.64	0.00
IRONWORKER, STRUCTURAL	$ 15.12	0.00
LABORER: Concrete Saw (Hand Held/Walk Behind)	$ 18.19	0.00
LABORER: Grade Checker	$ 11.45	0.00
LABORER: Mason Tender - Cement/Concrete	$ 11.39	0.00
LABORER: Pipelayer	$ 12.51	0.00
LABORER: Asphalt (Includes Distributor, Raker, Screed, Shoveler, and Spreader)	$ 13.39	3.43
LABORER: Common or General, Includes Erosion Control	$ 11.05	0.00
OPERATOR: Backhoe/Excavator/Trackhoe	$ 16.97	0.00
OPERATOR: Bobcat/Skid Steer/Skid Loader	$ 13.38	0.00
OPERATOR: Broom/Sweeper	$ 14.72	1.45
OPERATOR: Bulldozer	$ 16.02	1.80
OPERATOR: Compactor	$ 14.78	0.00
OPERATOR: Crane	$ 22.51	0.00
OPERATOR: Distributor	$ 17.96	2.38
OPERATOR: Grader/Blade	$ 18.45	5.03
OPERATOR: Hydroseeder	$ 15.41	0.00
OPERATOR: Loader	$ 12.80	2.63
OPERATOR: Mechanic	$ 19.46	0.00
OPERATOR: Milling Machine	$ 15.88	1.34
OPERATOR: Paver (Asphalt, Aggregate, and Concrete)	$ 16.75	5.11
OPERATOR: Piledriver	$ 16.70	0.00
OPERATOR: Roller	$ 14.13	1.43
OPERATOR: Scraper	$ 12.64	0.00
OPERATOR: Screed	$ 14.63	1.84

OPERATOR: Shuttle Buggy.....$ 14.18 2.03

PAINTER: Spray.....$ 23.30 0.00

TRAFFIC CONTROL: Flagger.....$ 11.70 0.00

TRAFFIC CONTROL:
Laborer-Cones/
Barricades/Barrels -
Setter/Mover/Sweeper.....$ 14.12 0.00

TRAFFIC SIGNALIZATION:
Laborer.....$ 13.42 0.00

TRUCK DRIVER: Dump Truck.....$ 16.71 0.00

TRUCK DRIVER: Flatbed Truck.....$ 14.96 1.07

TRUCK DRIVER: Hydroseeder
Truck.....$ 16.74 0.00

TRUCK DRIVER: Lowboy Truck.....$ 18.98 0.00

TRUCK DRIVER: Off the Road
Truck.....$ 12.38 0.00

TRUCK DRIVER: Water Truck.....$ 13.26 1.47

TRUCK DRIVER: Semi/Trailer
Truck.....$ 16.26 0.00

WELDERS - Receive rate prescribed for craft performing
operation to which welding is incidental.

==========

Note: Executive Order (EO) 13706, Establishing Paid Sick Leave for Federal Contractors applies to all contracts subject to the Davis-Bacon Act for which the contract is awarded (and any solicitation was issued) on or after January 1, 2017. If this contract is covered by the EO, the contractor must provide employees with 1 hour of paid sick leave for every 30 hours they work, up to 56 hours of paid sick leave each year. Employees must be permitted to use paid sick leave for their own illness, injury or other health-related needs, including preventive care; to assist a family member (or person who is like family to the employee) who is ill, injured, or has other health-related needs, including preventive care; or for reasons resulting from, or to assist a family member (or person who is like family to the employee) who is a victim of, domestic violence, sexual assault, or stalking. Additional information on contractor requirements and worker protections under the EO is available at www.dol.gov/whd/govcontracts.

Unlisted classifications needed for work not included within the scope of the classifications listed may be added after award only as provided in the labor standards contract clauses (29CFR 5.5 (a) (1) (ii)).

ATTACHMENT 5 TO EXHIBIT 8

STANDARD FEDERAL EQUAL EMPLOYMENT OPPORTUNITY CONSTRUCTION CONTRACT SPECIFICATIONS (EXECUTIVE ORDER 11246) (43 FR 14895)

1. As used in these specifications:

a. "Covered area" means the geographical area described in the solicitation from which this contract resulted;

b. "Director" means Director, Office of Federal Contract Compliance Programs, United States Department of Labor, or any person to whom the Director delegates authority;

c. "Employer identification number" means the Federal Social Security number used on the Employer's Quarterly Federal Tax Return, U.S. Treasury Department Form 941.

d. "Minority" includes:

(i) Black (all persons having origins in any of the Black African racial groups not of Hispanic origin);

(ii) Hispanic (all persons of Mexican, Puerto Rican, Cuban, Central or South American or other Spanish Culture or origin, regardless of race);

(iii) Asian and Pacific Islander (all persons having origins in any of the original peoples of the Far East, Southeast Asia, the Indian Subcontinent, or the Pacific Islands); and

(iv) American Indian or Alaskan Native (all persons having origins in any of the original peoples of North America and maintaining identifiable tribal affiliations through membership and participation or community identification).

2. Whenever the Contractor, or any Subcontractor at any tier, subcontracts a portion of the work involving any construction trade, it shall physically include in each subcontract in excess of $10,000 the provisions of these specifications and the Notice which contains the applicable goals for minority and female participation and which is set forth in the solicitations from which this contract resulted.

3. If the Contractor is participating (pursuant to 41 CFR 60–4.5) in a Hometown Plan approved by the U.S. Department of Labor in the covered area either individually or through an association, its affirmative action obligations on all work in the Plan area (including goals and timetables) shall be in accordance with that Plan for those trades which have unions participating in the Plan. Contractors must be able to demonstrate their participation in and compliance with the provisions of any such Hometown Plan. Each Contractor or Subcontractor participating in an approved Plan is individually required to comply with its obligations under the EEO clause, and to make a good faith effort to achieve each goal under the Plan in each trade in which it has employees. The overall good faith performance by other Contractors or Subcontractors toward a goal in an approved Plan does not excuse any covered Contractor's or Subcontractor's failure to take good faith efforts to achieve the Plan goals and timetables.

4. The Contractor shall implement the specific affirmative action standards provided in paragraphs 7a through p of these specifications. The goals set forth in the solicitation from

which this contract resulted are expressed as percentages of the total hours of employment and training of minority and female utilization the Contractor should reasonably be able to achieve in each construction trade in which it has employees in the covered area. Covered Construction contractors performing construction work in geographical areas where they do not have a Federal or federally assisted construction contract shall apply the minority and female goals established for the geographical area where the work is being performed. Goals are published periodically in the Federal Register in notice form, and such notices may be obtained from any Office of Federal Contract Compliance Programs office or from Federal procurement contracting officers. The Contractor is expected to make substantially uniform progress in meeting its goals in each craft during the period specified.

5. Neither the provisions of any collective bargaining agreement, nor the failure by a union with whom the Contractor has a collective bargaining agreement, to refer either minorities or women shall excuse the Contractor's obligations under these specifications, Executive Order 11246, or the regulations promulgated pursuant thereto.

6. In order for the nonworking training hours of apprentices and trainees to be counted in meeting the goals, such apprentices and trainees must be employed by the Contractor during the training period, and the Contractor must have made a commitment to employ the apprentices and trainees at the completion of their training, subject to the availability of employment opportunities. Trainees must be trained pursuant to training programs approved by the U.S. Department of Labor.

7. The Contractor shall take specific affirmative actions to ensure equal employment opportunity. The evaluation of the Contractor's compliance with these specifications shall be based upon its effort to achieve maximum results from its actions. The Contractor shall document these efforts fully, and shall implement affirmative action steps at least as extensive as the following:

a. Ensure and maintain a working environment free of harassment, intimidation, and coercion at all sites, and in all facilities at which the Contractor's employees are assigned to work. The Contractor, where possible, will assign two or more women to each construction project. The Contractor shall specifically ensure that all foremen, superintendents, and other on-site supervisory personnel are aware of and carry out the Contractor's obligation to maintain such a working environment, with specific attention to minority or female individuals working at such sites or in such facilities.

b. Establish and maintain a current list of minority and female recruitment sources, provide written notification to minorities and female recruitment sources and to community organizations when the Contractor or its unions have employment opportunities available, and maintain a record of the organizations' responses.

c. Maintain a current file of the names, addresses and telephone numbers of each minority and female off-the-street applicant and minority or female referral from a union, a recruitment source or community organization and of what action was taken with respect to each such individual. If such individual was sent to the union hiring hall for referral and was not referred back to the Contractor by the union or, if referred, not employed by the Contractor, this shall be documented in the file with the reason therefor, along with whatever additional actions the Contractor may have taken.

d. Provide immediate written notification to the Director when the union or unions with which the Contractor has a collective bargaining agreement has not referred to the Contractor a minority person or woman sent by the Contractor, or when the Contractor has other information that the union referral process has impeded the Contractor's efforts to meet its obligations.

e. Develop on-the-job training opportunities and/or participate in training programs for the area which expressly include minority and women, including upgrading programs and apprenticeship and trainee programs relevant to the Contractor's employment needs, especially those programs funded or approved by the Department of Labor. The Contractor shall provide notice of these programs to the sources compiled under 7b above.

f. Disseminate the Contractor's EEO policy by providing notice of the policy to unions and training programs and requesting their cooperation in assisting the Contractor in meeting its EEO obligations; by including it in any policy manual and collective bargaining agreement; by publicizing it in the company newspaper, annual report, etc.; by specific review of the policy with all management personnel and with all minority and female employees at least once a year and by posting the company EEO policy on bulletin boards accessible to all employees at each location where construction work is performed.

g. Review, at least annually, the company's EEO policy and affirmative action obligations under these specifications with all employees having any responsibility for hiring, assignment, layoff, termination or other employment decisions including specific review of these items with onsite supervisory personnel such as Superintendents, General Foremen, etc., prior to the initiation of construction work at any job site. A written record shall be made and maintained identifying the time and place of these meetings, persons attending, subject matter discussed, and disposition of the subject matter.

h. Disseminate the Contractor's EEO policy externally by including it in any advertising in the news media, specifically including minority and female news media, and providing written notification to and discussing the Contractor's EEO policy with other Contractors and Subcontractors with whom the Contractor does or anticipates doing business.

i. Direct its recruitment efforts, both oral and written, to minority, female and community organizations, to schools with minority and female students and to minority and female recruitment and training organizations serving the Contractor's recruitment area and employment needs. Not later than one month prior to the date for the acceptance of applications for apprenticeship or other training by any recruitment source, the Contractor shall send written notification to organizations such as the above, describing the -openings, screening procedures, and tests to be used in the selection process.

j. Encourage present minority and female employees to recruit other minority persons and women and, where reasonable, provide after school, summer and vacation employment to minority and female youth both on the site and in other areas of a Contractor's work force.

k. Validate all tests and other selection requirements where there is an obligation to do so under 41 CFR Part 60-3.

l. Conduct, at least annually, an inventory and evaluation at least of all minority and female personnel for promotional opportunities and encourage these employees to seek or to prepare for, through appropriate training, etc. such opportunities.

m. Ensure that seniority practices, job classifications, work assignments and other personnel practices, do not have a discriminatory effect by continually monitoring all personnel and employment related activities to ensure that the EEO policy and the Contractor's obligations under these specifications are being carried out.

n. Ensure that all facilities and company activities are nonsegregated except that separate or single-user toilet and necessary changing facilities shall be provided to assure privacy between the sexes.

o. Document and maintain a record of all solicitations of offers for subcontracts from minority and female construction contractors and suppliers, including circulation of solicitations to minority and female contractor associations and other business associations.

p. Conduct a review, at least annually of all supervisors' adherence to and performance under the Contractor's EEO policies and affirmative action obligations.

8. Contractors are encouraged to participate in voluntary associations which assist in fulfilling one or more of their affirmative action obligations (7a through p). The efforts of a contractor association, joint contractor-union, contractor-community, or other similar group of which the contractor is a member and participant, may be asserted as fulfilling any one or more of its obligations under 7a through p of these Specifications provided that the contractor actively participates in the group, makes every effort to assure that the group has a positive impact on the employment of minorities and women in the industry, ensures that the concrete benefits of the program are reflected in the Contractor's minority and female workforce participation, makes a good faith effort to meet its individual goals and timetables, and can provide access to documentation which demonstrates the effectiveness of actions taken on behalf of the Contractor. The obligation to comply, however, is the Contractor's and failure of such a group to fulfill an obligation shall not be a defense for the Contractor's noncompliance.

9. A single goal for minorities and a separate single goal for women have been established. The Contractor, however, is required to provide equal employment opportunity and to take affirmative action for all minority groups, both male and female, and all women, both minority and non-minority. Consequently, the Contractor may be in violation of the Executive Order if a particular group is employed in a substantially disparate manner (for example, even though the Contractor has achieved its goals for women generally, the Contractor may be in violation of the Executive Order if a specific minority group of women is underutilized).

10. The Contractor shall not use the goals and timetables or affirmative action standards to discriminate against any person because of race, color, religion, sex, or national origin.

11. The Contractor shall not enter into any Contract or Subcontract with any person or firm debarred from Government contracts pursuant to Executive Order 11246.

12. The Contractor shall carry out such sanctions and penalties for violation of these specifications and of the Equal Opportunity Clause, including suspension, termination and cancellation of existing subcontracts as may be imposed or ordered pursuant to Executive Order 11246, as amended, and its implementing regulations, by the Office of Federal Contract Compliance Programs. Any Contractor who fails to carry out such sanctions and penalties shall be in violation of these specifications and Executive Order 11246, as amended.

13. The Contractor, in fulfilling its obligations under these specifications, shall implement specific affirmative action steps, at least as extensive as those standards prescribed in paragraph 7 of these specifications, so as to achieve maximum results from its efforts to ensure equal employment opportunity. If the Contractor fails to comply with the requirements of the Executive Order, the implementing regulations, or these specifications, the Director shall proceed in accordance with 41 CFR 60–4.8.

14. The Contractor shall designate a responsible official to monitor all employment related activity to ensure that the company EEO policy is being carried out, to submit reports relating to the provisions hereof as may be required by the Government and to keep records. Records shall at least include for each employee the name, address, telephone numbers, construction trade, union affiliation if any, employee identification number when assigned, social security number, race, sex, status (e.g., mechanic, apprentice trainee, helper, or laborer), dates of changes in status, hours worked per week in the indicated trade, rate of pay, and locations at which the work was performed. Records shall be maintained in an easily understandable and retrievable form; however, to the degree that existing records satisfy this requirement, contractors shall not be required to maintain separate records.

15. Nothing herein provided shall be construed as a limitation upon the application of other laws which establish different standards of compliance or upon the application of requirements for the hiring of local or other area residents (e.g., those under the Public Works Employment Act of 1977 and the Community Development Block Grant Program).

ATTACHMENT 6 TO EXHIBIT 8

DISADVANTAGED BUSINESS ENTERPRISE PROGRAM
CRITERIA FOR ACCEPTABILITY

The purpose of this special provision is to establish criteria for acceptability of DBE firms for work performed on this contract. The intent is to ensure all participation counted toward fulfillment of the DBE goals is (1) real and substantial, (2) actually performed by viable, independent DBE owned firms, and (3) in accordance with the spirit of the applicable laws and regulations.

The policy of the Georgia Department of Transportation is to ensure compliance with Title VI of the Civil Rights Act of 1964, 49 Code of Federal Register, Part 26 and related statutes and regulations in all program activities.

To this end the Georgia Department of Transportation shall not discriminate on the basis of race, color, sex or national origin in the award, administration and performance of any Georgia Department of Transportation assisted contract or in the administration of its Disadvantaged Business Enterprise Program. The Georgia Department of Transportation shall take all necessary and reasonable steps to ensure nondiscrimination.

DBE payments and commitments for Federal-aid projects shall be separate and distinct and cannot be transferred or combined in any matter.

The DBE Goal specified in the contract will be a percentage representing the DBE Race Conscious Participation. The Contractor will strive to achieve an additional percentage in his/her contracts for all projects during the course of the current State Fiscal Year, in order to meet the overall Georgia Department of Transportation DBE goal.

DBE DIRECTORY: The Department has available a directory or source list to facilitate identifying DBEs with capabilities relevant to general contracting requirements and to particular solicitations. The Department will make the directory available to bidders and proposers in their efforts to meet the DBE requirements. The directory or listing includes firms which the Department has certified to be eligible DBEs in accordance with 49 CFR Part 26.

GOAL FOR PARTICIPATION: If a percentage goal for DBE participation in this contract is set forth elsewhere in this proposal, the Contractor shall complete the DBE GOALS Form included in the proposal. The Contractor is encouraged to make every effort to achieve the goal set by the Department. However, if the Contractor cannot find sufficient DBE participants to meet the goal established by the Department, the Department will consider for award a proposal with less participation than the established goal if:

(A) The bidder can demonstrate no greater participation could be obtained. This should be well documented by demonstrating the Contractor's actions through good faith efforts. The following is a list of types of actions which the Department will consider as part of the Contractor's good faith efforts to obtain DBE participation. This is not intended to be a mandatory checklist nor intended to be exclusive or exhaustive. Other factors or types of efforts may be relevant in appropriate cases.

(1) Soliciting through all reasonable and available means (e.g. attendance at pre-bid meetings, advertising and/or written notices) the interest of all certified DBEs who have the

capability to perform the work of the contract. The Contractor must solicit this interest within sufficient time to allow the DBEs to respond to the solicitation. The Contractor must determine with certainty if the DBEs are interested by taking appropriate steps to follow up initial solicitations.

(2) Selecting portions of the work to be performed by DBEs in order to increase the likelihood the DBE goals will be achieved. This includes, where appropriate, breaking out contract work items into economically feasible units to facilitate DBE participation, even when the Contractor might otherwise prefer to perform these work items with its own forces.

(3) Providing interested DBEs with adequate information about the plans, specifications, and requirements of the contract in a timely manner to assist DBEs participants in responding to a solicitation.

(4) (a) Negotiating in good faith with interested DBEs. Contractor(s) are responsible to make a portion of the work available to DBE subcontractors and suppliers and to select those portions of the work or material needs consistent with the available DBE subcontractors and suppliers, so as to facilitate DBE participation. Evidence of such negotiation includes the names, addresses, and telephone numbers of DBEs that were considered; a description of the information provided regarding the plans and specifications for the work selected for subcontracting; and evidence as to why additional agreements could not be reached for DBEs to perform the work.

(b) Contractor(s) using good business judgment would consider a number of factors in negotiating with subcontractors, including DBE subcontractors, and would take a firm's price and capabilities as well as contract goals into consideration. However, the fact there may be some additional costs involved in finding and using DBEs is not in itself sufficient reason for a bidder's failure to meet the contract DBE goal, as long as such costs are reasonable. Also, the ability or desire of a Contractor to perform the work of a contract with its own organization does not relieve the Contractor of the responsibility to make good faith efforts. Contractors are not, however, required to accept higher quotes from DBEs if the price difference is excessive or unreasonable.

(5) Not rejecting DBEs as being unqualified without sound reasons based on a thorough investigation of their capabilities. The Contractor's standing within its industry, membership in specific groups, organizations, or associations and political or social affiliations (for example union vs. nonunion employee status) are not legitimate causes for the rejection or non-solicitation of bids in the Contractor's efforts to meet the project goal.

(6) Making efforts to assist interested DBEs in obtaining bonding, lines of credit, or insurance as required by the contractor.

(7) Making efforts to assist interested DBEs in obtaining necessary equipment, supplies, materials, or related assistance or services.

(8) Effectively using the services of available minority/women community organizations; minority/women Contractors' groups; local, state, and Federal minority/women business assistance offices; and other organizations as allowed on a case-by-case basis to provide assistance in the recruitment and placement of DBE's.

(B) The participation proposed by the low bidder is not substantially less than the participation proposed by the other bidders on the same contract.

If no percentage goal is set forth in the proposal, the contractor may enter a proposed DBE participation. This voluntary DBE participation will count as race neutral DBE participation. Prime Contractor shall report race-neutral participation in accordance with the DBE Monthly Report requirements shown in this document.

To be eligible for award of this contract, all bidders will be required to submit the following information to the Department's Procurement Officer as designated in Article 2.2.1 of the Instructions to Proposers (ITP) by the close of business on the 3rd working day following opening of the bid as a matter of bidder responsibility.

(1) The names and addresses of DBE firms committed to participate in the Contract;

(2) A description of the work each DBE will perform;

(3) The dollar amount of the participation of each DBE firm participating;

(4) Written documentation of the bidder's commitment to use a DBE subcontractor whose participation it submits to meet a contract goal;

(5) Written confirmation from the DBE committed to participating in the contract, as provided in the prime contractor's commitment.

(6) If the contract goal is not met, evidence of good faith efforts must be provided.

Failure by a bidder to furnish the above information may subject the bid to disqualification. Also failure by the bidder to submit satisfactory evidence of good faith efforts may subject the bid to disqualification.

Award of a contract by the Department to a Prime Contractor who has listed DBE participants with the bid may not constitute final approval by the Department of the listed DBE. The Department reserves the right to approve or disapprove a Disadvantaged firm after a review of the Disadvantaged firm's proposal participation. Payment to the Contractor under the contract may be withheld until final approval of the listed DBEs is granted by the Department.

If the Contractor desires to substitute a DBE in lieu of those listed in the proposal, a letter of concurrence shall be required from the listed DBE prior to approval of the substitution, unless this requirement is waived by the Department.

Agreements between bidder and a DBE in which promises not to provide Subcontracting quotations to other bidders are prohibited.

DEFINITION: For the purposes of this provision, the following definitions will apply: Disadvantaged Business Enterprise or DBE means a for-profit small business concern –

(1) Ensuring at least 51 percent owned by one or more individuals who are both socially and economically disadvantaged or, in the case of a corporation, in which 51 percent of the stock is owned by one or more such individuals; and

(2) Whose management and daily business operations are controlled by one or more of the socially and economically disadvantaged individuals who own the business.

Good Faith Efforts means efforts to achieve a DBE goal or other requirement of this part which, by their scope, intensity, and appropriateness to the objective, can reasonably be expected to fulfill the program requirement.

Joint Venture means an association of a DBE firm and one or more other firms to carry out a single, for-profit business enterprise, for which the parties combine their property, capital, efforts, skills and knowledge, and in which the DBE is responsible for a distinct, clearly defined portion of the work of the contract and whose share in the capital contribution, control, management, risks, and profits of the joint venture are commensurate with its ownership interest.

Socially and Economically Disadvantaged Individual means any individual who is a citizen (or lawfully admitted permanent resident) of the United States and who is –

(1) Any individual who the Department finds to be a socially and economically disadvantaged individual on a case-by-case basis.

(2) Any individual in the following groups, members of which are reputably presumed to be socially and economically disadvantaged.

(i) "Black Americans," which includes persons having origins, in any of the Black racial groups of Africa;

(ii) "Hispanic Americans," which includes persons of Mexican, Puerto Rican, Cuban, Dominican, Central or South American, or other Spanish or Portuguese culture or origin, regardless of race;

(iii) "Native Americans," which includes persons who are American Indians, Eskimos, Aleuts, or Native Hawaiians;

(iv) "Asian-Pacific Americans," which includes persons whose origins are from Japan, China, Taiwan, Korea, Burma (Myanmar), Vietnam, Laos, Cambodia (Kampuchea), Thailand, Malaysia, Indonesia, the Philippines, Brunei, Samoa, Guam, the U.S. Trust Territories of the Pacific Islands (Republic of Palau), the Commonwealth of the Northern Marianas Islands, Macao, Fiji, Tonga, Kiribati, Juvalu, Nauru, Federated States of Micronesia, or Hong Kong;

(v) "Subcontinent Asian Americans," which includes persons whose origins are from India, Pakistan, Bangladesh, Bhutan, the Maldives Islands, Nepal or Sri Lanka;

(vi) Women;

(vii) Any additional groups whose members are designated as socially and economically disadvantaged by the SBA, at such time as the SBA designation becomes effective.

(3) GDOT will presume that such persons are socially and economically disadvantaged only to the extent permitted by applicable federal law.

Race-conscious measure is one focused specifically on assisting only DBEs, including women-owned DBEs.

Race-neutral measure is one being, or can be, used to assist all small businesses. For the purposes of this part, race-neutral includes gender-neutrality.

DISCRIMINATION PROHIBITED: No person shall be excluded from participation in, denied the benefits of, or otherwise discriminated against in connection with the award and performance of this contract on the grounds of race, color, sex or national origin.

The following assurance becomes a part of this contract and must be included in and made a part of each subcontract the prime contractor enters into with their subcontractors (49 CFR 26.13):

> "The contractor, and/or subcontractor shall not discriminate on the basis of race, color, national origin, or sex in the performance of this contract. The contractor shall carry out applicable requirements of 49 CFR Part 26 in the award and administration of DOT – assisted contracts. Failure by the contractor to carry out these requirements is (breach) of this contract which may result in the termination of this contract or such other remedy as the Department deems appropriate.

Failure to Achieve Requirements: Periodic reviews shall be made by the Department to determine the extent of compliance with the requirements set forth in this provision. If the Contractor is found to be in noncompliance, further payments for any work performed may be withheld until corrective action is taken. If corrective action is not taken, it may result in termination of this contract.

Participation will be counted toward fulfillment of the DBE goal as follows:

(A) When a DBE participates in a contract, the Contractor counts only the value of the work actually performed by the DBE toward DBE goals.

(1) Count the entire amount of the portion of a construction contract (or other contract not covered by paragraph (A) (2) of this section) performed by the DBE's own forces. Include the cost of supplies and materials obtained by the DBE for the work of the contract, including supplies purchased or equipment leased by the DBE (except supplies and equipment the DBE subcontractor purchases or leases from the prime contractor or its affiliate).

(2) Count the entire amount of fees or commissions charged by a DBE firm for providing a bona fide service, such as professional, technical consultant, or managerial services, or for providing bonds or insurance specifically required for the performance of a DOT-assisted contract, toward DBE goals, provided the Department determines the fee is reasonable and not excessive as compared with fees customarily allowed for similar services.

(3) When a DBE subcontracts part of the work of its contract to another firm, the value of the subcontracted work may be counted toward DBE goals only if the DBE's subcontractor is itself a DBE. Work that a DBE subcontracts to a non-DBE firm does not count toward DBE goals.

(B) When a DBE performs as a participant in a joint venture, count a portion of the total dollar value of the contract equal to the distinct, clearly defined portion of the work of the contract the DBE performs with own forces toward DBE goals.

(C) Count expenditures to a DBE contractor toward DBE goals only if the DBE is performing a commercially useful function on that contract.

(1) A DBE performs a commercially useful function when responsible for execution of the work of the contract and carrying out responsibilities by actually performing, managing, and supervising the work involved. To perform a commercially useful function, the DBE must also be responsible, with respect to materials and supplies used on the contract, for negotiating price, determining quality and quantity, ordering the material, and installing (where applicable) and paying for the material itself.

(2) A DBE does not perform a commercially useful function if their role is limited to being an extra participant in a transaction, contract, or project through which funds are passed in order to obtain the appearance of DBE participation.

(3) If a DBE does not perform or exercise responsibility for at least 30 percent of the total cost of their contract with their own work force, or the DBE subcontracts a greater portion of the work of a contract than would be expected on the basis of normal industry practice for the type of work involved, the Department will presume the DBE is not performing a commercially useful function.

(4) When a DBE is presumed not to be performing a commercially useful function as provided in paragraph (C) (3) of this section, the DBE may present evidence to rebut this presumption.

(5) The Department's decisions on commercially useful function matters are subject to review by the US DOT, but are administratively appealable to the US DOT.

(D) The following factors are to be used in determining whether a DBE trucking company is performing a commercially useful function:

(1) The DBE must be responsible for the management and supervision of the entire trucking operation for which they are responsible on a particular contract, and there cannot be a contrived arrangement for the purpose of meeting DBE goals.

(2) The DBE must itself own and operate at least one fully licensed, insured, and operational truck used on the contract.

(3) The DBE receives credit for the total value of the transportation services it provides on the contract using trucks it owns, insures, and operates using drivers it employs.

(4) The DBE may lease trucks from another DBE firm, including an owner/operator who is certified as a DBE. The DBE who leases trucks from another DBE receives credit for the total value of the transportation services the lessee DBE provided on the contract.

(5) The DBE may also lease trucks from a non-DBE and is entitled to credit only for the fee or commission it receives as a result of the lease arrangement. The DBE does not receive

credit for the total value of the transportation services provided by the lessee, since these services are not provided by a DBE.

(6) For purposes of this paragraph (D), a lease must indicate the DBE has exclusive use of and control over the truck. This does not preclude the leased truck from working for others during the term of the lease with the consent of the DBE, so long as the lease gives the DBE absolute priority for use of the leased truck. Leased trucks must display the name and identification number of the DBE.

(E) Count expenditures with DBEs for materials or supplies toward DBE goals as provided in the following:

(1) (i) If the materials or supplies are obtained from a DBE manufacturer, count 100 percent of the cost of the materials or supplies toward DBE goals.

(ii) For purposes of this paragraph, a manufacturer is a firm that operates or maintains a factory or establishment that produces, on the premises, the materials, supplies, articles, or equipment required under the contract and of the general character described by the specifications.

(2) (i) If the materials or supplies are obtained from a DBE regular dealer, count 60 percent of the cost of the materials or supplies toward DBE goals.

(ii) For purposes of this section, a regular dealer is a firm owning, operating, or maintaining a store, warehouse, or other establishment in which the materials, supplies, articles or equipment of the general character described by the specifications and required under the contract are bought, kept in stock, and regularly sold or leased to the public in the usual course of business.

(A) To be a regular dealer, the firm must be an established, regular business engaging, as its principal business and under its own name, in the purchase and sale or lease of the products in question.

(B) A person may be a regular dealer in such bulk items as petroleum products, steel, cement, gravel, stone, or asphalt without owning, operating, or maintaining a place of business as provided in this paragraph (E)(2)(ii) if the person both owns and operates distribution equipment for the products. Any supplementing of regular dealers' own distribution equipment shall be by a long-term lease agreement and not on an ad hoc or contract-by-contract basis.

(C) Packagers, brokers, manufacturers' representatives, or other persons who arrange or expedite transactions are not regular dealers within the meaning of this paragraph (E)(2).

(3) With respect to materials or supplies purchased from a DBE which is neither a manufacturer nor a regular dealer, count the entire amount of fees or commissions charged for assistance in the procurement of the materials and supplies, or fees or transportation charges for the delivery of materials or supplies required on a job site, toward DBE goals, provided you determine the fees to be reasonable and not excessive as compared with fees customarily allowed for similar services. Do not count any portion of the cost of the materials and supplies themselves toward DBE goals, however.

(4) Do not count the participation of a DBE subcontractor toward the prime contractor's DBE achievements until the amount being counted toward the goal has been paid to the DBE.

(5) No participation will be counted not in compliance with Special Provision entitled "Criteria for Acceptability" which is a part of this contract or with any provisions included in 49 CFR Part 26.

(6) If the contract amount overruns, the contractor will not be required to increase the dollar amount of DBE participation. If the contract amount under runs, the contractor will not be allowed to under run the dollar amount of DBE participation except when the DBE subcontracted items themselves under run.

REPORTS

A: The contractor shall submit a "DBE Participation Report" on this contract monthly which shall include the following:

1. The name of each DBE participating in the contract.

2. A description of the work to be performed, materials, supplies, and services provided by each DBE.

3. Whether each DBE is a supplier, subcontractor, owner/operator, or other.

4. The dollar value of each DBE subcontract or supply agreement.

5. The actual payment to date of each DBE participating in the contract.

6. The report shall be updated by the Prime Contractor whenever the approved DBE has performed a portion of the work that has been designated for the contract. Copies of this report should be transmitted promptly to the Engineer. Failure to submit the report within 30 calendar days following the end of the month may cause payment to the contractor to be withheld.

7. The Prime Contractor shall notify the Project Engineer at least 24 hours prior to the time the DBE commences working on the project. The DBE must furnish supervision of the DBE portion of the work, and the person responsible for this supervision must report to the Project Engineer when they begin work on the project. They must also inform the Project Engineer when their forces will be doing work on the project.

B. In order to comply with 49 CFR 26.11, the Prime Contractor shall submit documentation regarding all payments made from the Prime to all DBE subcontractors on federal aid projects in the form of copies of cancelled checks or notarized electronic documentation which validates said payments made on the DBE Monthly Participation Reports. This information shall be required monthly and submitted with the DBE Monthly Participation Report.

C. Failure to respond within the time allowed in the request will be grounds for withholding all payments on all Contracts.

SUBSTITUTION OF DBEs: The Contractor shall make reasonable efforts to replace a DBE Subcontractor unable to perform work for any reason with another DBE. The Department shall approve all substitutions of Subcontractors in order to ensure the substitute firms are eligible DBEs.

CERTIFICATION OF DBEs: To ensure the DBE Program benefits only firms owned and controlled by Disadvantaged Individuals, the Department shall certify the eligibility of DBEs and joint ventures involving DBEs named by bidders.

Questions concerning DBE Certification/Criteria should be directed to the EEO Office at (404) 631-1972.

ATTACHMENT 7 TO EXHIBIT 8

DEBARMENT AND SUSPENSION CERTIFICATION

1. By signing and submitting its proposal or bid, and by executing the Agreement or and Contract, each prospective Design-Build Team member (at all tiers) shall be deemed to have signed and delivered the following certification:

The undersigned certifies to the best of its knowledge and belief, that it and its principals:

a. Are not presently debarred, suspended, proposed for debarment, declared ineligible, or voluntarily excluded from covered transactions by any federal department or agency;

b. Have not within a 3-year period preceding this proposal been convicted of or had a civil judgment rendered against them for commission of fraud or a criminal offense in connection with obtaining, attempting to obtain, or performing a public (federal, state or local) transaction or contract under a public transaction; violation of federal or state antitrust statutes or commission of embezzlement, theft, forgery, bribery, falsification or destruction of records, making false statements, or receiving stolen property;

c. Are not presently indicted for or otherwise criminally or civilly charged by a governmental entity (federal, state or local) with commission of any of the offenses enumerated in paragraph 1b of this certification; and

d. Have not within a 3-year period preceding this application/proposal had one or more public transactions (federal, state or local) terminated for cause or default.

2. Where the prospective Design-Build Team member is unable to certify to any of the statements in this certification, such Person shall attach a certification to its proposal or bid, or shall submit it with the executed Agreement or Contract, stating that it is unable to provide the certification and explaining the reasons for such inability.

ATTACHMENT 8 TO EXHIBIT 8

CERTIFICATION REGARDING USE OF CONTRACT FUNDS FOR LOBBYING

By signing and submitting its proposal or bid, and by executing the Agreement or any Contract, each prospective Design-Build Team and Contractor (at all tiers) shall be deemed to have signed and delivered the following:

1. The prospective Design-Build Team/Contract certifies, to the best of its knowledge and belief, that:

a. No federal appropriated funds have been paid or will be paid, by or on behalf of the undersigned, to any person for influencing or attempting to influence an officer or employee of any federal agency, a Member of Congress, an officer or employee of Congress, or an employee of a Member of Congress in connection with the awarding of **ANY** federal contract, the making of any federal grant, the making of any federal loan, the entering into of any cooperative agreement, and the extension, continuation, renewal, amendment, or modification of any federal contract, grant, loan, or cooperative agreement.

b. If any funds other than federal appropriated funds have been paid or will be paid to any person for influencing or attempting to influence an officer or employee of any federal agency, a member of Congress, an officer or employee of Congress, or an employee of a member of Congress in connection with **THIS** Federal contract, grant, loan, or cooperative agreement, the undersigned shall complete and submit Standard Form-LLL, "Disclosure Form to Report Lobbying," in accordance with its instructions, and shall include a copy of said form in its proposal or bid, or submit it with the executed Agreement or Contract.

2. This certification is a material representation of fact upon which reliance was placed when this transaction was made or entered into. Submission of this certification is a prerequisite for making or entering into this transaction imposed by 31 U.S.C. § 1352. Any person who fails to file the required certification shall be subject to a civil penalty of not less than $10,000 and not more than $100,000 for each such failure.

3. Design-Build Team/Contractor shall require that the language of this certification be included in all lower tier Contracts which exceed $100,000 and that all such recipients shall certify and disclose accordingly.

4. The undersigned certifies or affirms the truthfulness and accuracy of each statement of its certification and disclosure, if any. In addition, the undersigned understands and agrees that the provisions of 31 U.S.C. §3801, et seq., apply to this certification and disclosure, if any.

[Note: Pursuant to 31 U.S.C. § 1352(c)(1)-(2)(A), any person who makes a prohibited expenditure or fails to file or amend a required certification or disclosure form shall be subject to a civil penalty of not less than $10,000 and not more than $100,000 for each expenditure or failure.]

NOTE: DESIGN-BUILD TEAM AND EACH CONTRACTOR IS REQUIRED, PURSUANT TO FEDERAL LAW, TO INCLUDE THE ABOVE LANGUAGE IN CONTRACTS OVER $100,000 AND TO OBTAIN THIS LOBBYING CERTIFICATE FROM EACH CONTRACTOR BEING PAID $100,000 OR MORE.

ATTACHMENT 9 TO EXHIBIT 8

COMPLIANCE WITH TITLE VI OF THE CIVIL RIGHTS ACT OF 1964, ETC., FOR FEDERAL-AID CONTRACTS

During the performance of this Agreement, Design-Build Team, for itself, its assignees and successors in interest (hereinafter referred to as the "Contractor"), agrees as follows:

1. **Compliance with Regulations**: Contractor will comply with the Regulations of the United States Department of Transportation ("USDOT") relative to nondiscrimination in Federally-assisted programs of the USDOT (Title 49, Code of Federal Regulations, Part 21, hereinafter referred to as the "Regulations"), which are herein incorporated by referenced and made a part of this Agreement.

2. **Nondiscrimination**: Contractor, with regard to the work performed by it, will not discriminate on the ground of race, color, national origin, disability, sex, or age in the selection and retention of subcontracts including procurements of materials and leases of equipment. This will be done in accordance with Title VI of the Civil Rights Act of 1964 and other Non-Discrimination Authorities i.e., Section 504 of the 1973 Rehabilitation Act, the 1973 Federal-Aid Highway Act, the 1975 Age Discrimination Act, and the Americans with Disabilities Act of 1990. Contractor will not participate either directly or indirectly in the discrimination prohibited by Section 21.5 of the Regulations, including employment practices when contract covers a program set forth in Appendix B of the Regulations. In addition, Contractor will not participate either directly or indirectly in discrimination by 23 CFR 710.405(b).

3. **Solicitations for subcontracts, including procurements of materials and equipment**: In all solicitations, either by competitive bidding or negotiation made by Contractor for work to be performed under a subcontract, including procurements of materials or equipment, each potential subcontractor or supplier shall be notified by Contractor or Contractor's obligations under this Agreement and the Regulations relative to nondiscrimination on the ground of race, color, national origin, disability, sex or age.

4. **Information and Reports**: Contractor will provide all information and reports required by the Regulations, or orders and instructions issued pursuant thereto, and will permit access to its books, records, accounts, other sources of information, and its facilities as may be determined by the USDOT or the Federal Highway Administration to be pertinent to ascertain compliance with such Regulations, orders and instructions. Where any information required of a Contractor is in the exclusive possession of another who fails or refuses to furnish this information, Contractor shall so certify to the USDOT, or the Federal Highway Administration as appropriate, and shall set forth what efforts it has made to obtain the information.

5. **Sanctions for Noncompliance**: In the event of Contractor's noncompliance with the nondiscrimination provisions of this Agreement, the USDOT shall impose such sanctions as it or the Federal Highway Administration may determine to be

appropriate, including, but not limited to, those described in Section 3 of Exhibit 8, Attachment 2 to this Agreement.

6. **Incorporation of Provisions**: Contractor will include the provisions of paragraph (1) through (5) in every subcontract, including procurements of materials and lease of equipment, unless exempt by the Regulations, orders or instruction issued pursuant thereto. Contractor will take such action with respect to any subcontract or procurement as the USDOT or the Federal Highway Administration may direct as a means of enforcing such provisions, including sanctions for noncompliance, provided, however, that in the event Contractor becomes involved in, or is threatened with, litigation with a subcontractor or supplier as result of such direction, Contractor may request the State to enter into such litigation to protect the interests of the State, and, in addition, Contractor may request the United States to enter into such litigation to protect the interest of the United States.

ATTACHMENT 10 TO EXHIBIT 8

COMPLIANCE WITH BUY AMERICA REQUIREMENTS

Design-Build Team shall comply with the Federal Highway Administration (FHWA) Buy America Requirement in 23 CFR 635.410, which permits FHWA participation in this Agreement only if domestic steel and iron will be used on the Project. To be considered domestic, all steel and iron used and all products manufactured from steel and iron must be produced in the United States and all manufacturing processes, including application of a coating, for these materials must occur in the United States. Coating includes all processes that protect or enhance the value of the material to which the coating is applied. This requirement does not preclude a minimal use of foreign steel and iron materials, provided the cost of such materials does not exceed 0.1% of the contract price under the Agreement.

Concurrently with execution of the Agreement, Design-Build Team has completed and submitted, or shall complete and submit, to GDOT a Buy America Certificate, in the format below. After submittal, Design-Build Team is bound by its original certification.

A false certification is a criminal act in violation of 18 U.S.C. § 1001. Should this Agreement be investigated, Design-Build Team has the burden of proof to establish that it is in compliance.

At Design-Build Team's request, GDOT may, but is not obligated to, seek a waiver of Buy America requirements if grounds for the waiver exist. However, Design-Build Team certifies that it will comply with the applicable Buy America requirements if a waiver of those requirements is not available or not pursued by GDOT. A request for a waiver shall be treated as a Change Request under Article 13.2 of the Agreement.

BUY AMERICA CERTIFICATE

[Insert Completed Form J in Executed Version]

ATTACHMENT 11 TO EXHIBIT 8

COMPLIANCE WITH THE CARGO PREFERENCE ACT

The Cargo Preference Act (CPA) establishes certain requirements for the use of privately owned United States-flag commercial vessels in transporting equipment, materials, and commodities by ocean vessel. Contractors are required to comply with the CPA requirements and 46 CFR 381 and are required to insert the substance of these provisions into any subcontracts issued pursuant to this contract.

Cargo Preference Act Requirements

All Federal-aid projects shall comply with 46 CFR 381.7 (a)-(b) as follows:

(a) **Agreement Clauses**. Use of United States-flag vessels:

(1) Pursuant to Pub. L. 664 (43 U.S.C. 1241(b)) at least 50 percent of any equipment, materials or commodities procured, contracted for or otherwise obtained with funds granted, guaranteed, loaned, or advanced by the U.S. Government under this agreement, and which may be transported by ocean vessel, shall be transported on privately owned United States-flag commercial vessels, if available.

(2) Within 20 days following the date of loading for shipments originating within the United States or within 30 working days following the date of loading for shipments originating outside the United States, a legible copy of a rated, 'on-board' commercial ocean bill-of-lading in English for each shipment of cargo described in paragraph (a)(1) of this section shall be furnished to both the Contracting Officer (through the prime contractor in the case of subcontractor bills-of-lading) and to the Division of National Cargo, Office of Market Development, Maritime Administration, Washington, DC 20590.

(b) **Contractor and Subcontractor Clauses**. Use of United States-flag vessels: The contractor agrees:

(1) To utilize privately owned United States-flag commercial vessels to ship at least 50 percent of the Gross tonnage (computed separately for dry bulk carriers, dry cargo liners, and tankers) involved, whenever shipping any equipment, material, or commodities pursuant to this contract, to the extent such vessels are available at fair and reasonable rates for United States-flag commercial vessels.

(2) To furnish within 20 days following the date of loading for shipments originating within the United States or within 30 working days following the date of loading for shipments originating outside the United States, a legible copy of a rated, 'on-board' commercial ocean bill-of-lading in English for each shipment of cargo described in paragraph (b) (1) of this section to both the Contracting Officer (through the prime contractor in the case of subcontractor bills-of-lading) and to the Division of National Cargo, Office of Market Development, Maritime Administration, Washington, DC 20590.

(3) To insert the substance of the provisions of this clause in all subcontracts issued pursuant to this contract.

The CPA requirements would be appropriate for oceanic shipments of materials or equipment that is intended for use on a specific Federal-aid project, such as a precast concrete structural members, fabricated structural steel, tunnel boring machines, or large-capacity cranes.

The CPA requirements are not applicable for goods or materials that come into inventories independent of an FHWA funded-contract. For example, the requirements would not apply to shipments of Portland cement, asphalt cement, or aggregates, as industry suppliers and contractors use these materials to replenish existing inventories. In general, most of the materials used for highway construction originate from existing inventories and are not acquired solely for a specific Federal-aid project.

A test for whether CPA requirements apply or do not apply to shipped goods or materials would be if the goods or materials are what one would consider to be common inventory supplies for highway construction contractor, then CPA would **not apply**. If the materials or goods are considered to be supplies one would consider to be not common supplies of a highway construction contractor then CPA would **apply**.

ATTACHMENT 12 TO EXHIBIT 8

GDOT - APPENDIX A

During the performance of this Agreement, the DB Team, for itself, its assignees, and successors in interest (hereinafter referred to as the "DB Team"), agree as follows:

1. **Compliance with Regulations**
The DB Team shall comply with the Regulations relative to nondiscrimination in federally-assisted programs of the Department of Transportation (hereinafter referred to as DOT), Title 49, Code of Federal Regulations, part 21, as they may be amended from time to time, (hereinafter referred to as the Regulations), which are herein incorporated by reference and made a part of this Agreement.

2. **Nondiscrimination**
The DB Team, with regard to the work performed by it during the Agreement, shall not discriminate on the grounds of race, color, sex, or national origin in the selection and retention of subcontractors, including procurement of materials and leases of equipment. The DB Team shall not participate either directly or indirectly in discrimination prohibited by Section 21.5 of the Regulations, including employment practices when the Agreement covers a program set forth in Appendix B of the Regulations.

3. **Solicitations for Subcontracts, including Procurement of Materials and Equipment**
In all solicitations either by competitive bidding or negotiations made by the DB Team for work to be performed under a subcontract, including procurement of materials or leases of equipment, each potential subcontractor or supplier shall be notified by the DB Team of the DB Team's obligations under this Agreement and the Regulations relative to nondiscrimination on the ground of race, color, sex, or national origin.

4. **Information and Reports**
The DB Team shall provide all information and reports required by the Regulations or directives issued pursuant thereto, and shall permit access to its books, records, accounts, other sources of information and its facilities as may be determined by GDOT or the Federal Highway Administration to be pertinent to ascertain compliance with such Regulations, orders, and instructions. Where any information required of the DB Team is in the exclusive possession of another who fails or refuses to furnish this information, the DB Team shall so certify to GDOT, or the Federal Highway Administration as appropriate, and shall set forth what efforts it has made to obtain the information.

5. **Sanctions for Noncompliance**
In the event of the DB Team's noncompliance with the nondiscrimination provisions of this Agreement, GDOT shall impose such contractual sanctions as GDOT or the Federal Highway Administration may determine to be appropriate, including, but not limited to:
    a. Withholding of payments to the DB Team under the Agreement until the DB Team complies; and/or
    b. Cancellation, termination, or suspension of the Agreement, in whole or in part.

6. **Incorporation of Provisions**

The DB Team shall include the provisions of paragraphs (1) through (6) in every subcontract, including procurement of materials and leases of equipment, unless exempt by the Regulations, or directives issued pursuant thereto.

The DB Team shall take such action with respect to any subcontractor or procurement as GDOT or the Federal Highway Administration may direct as a means of enforcing such provisions including sanctions for noncompliance: Provided, however, that in the event the DB Team becomes involved in, or is threatened with, litigation with a subcontractor or supplier as a result of such direction, the DB Team may request GDOT enter into such litigation to protect the interests of the state and, in addition, the DB Team may request the United States to enter into such litigation to protect the interests of the United States.

EXHIBIT 9

MILESTONE DEADLINES

[Insert Table M-1 from ITP Form M]

EXHIBIT 10

RESERVED

EXHIBIT 11

HAZARDOUS MATERIALS RISK ALLOCATION TERMS

1. Design-Build Team shall be solely responsible for Hazardous Materials Management, including all required remediation and disposal of Hazardous Materials that constitute Design-Build Team Releases of Hazardous Materials or which are otherwise with respect to any Additional Properties or Project Specific Locations, Design-Build Team shall be responsible for all Hazardous Materials Management for Design-Build Team Release(s) of Hazardous Materials or with respect to Additional Properties, even if the required Hazardous Materials Management extends beyond the end of the Term or Final Acceptance of the Work.

2. Other than a Design-Build Team Releases of Hazardous Materials or with respect to any Project Specific Locations, GDOT shall, at its own expense shall manage, treat, handle, store, remediate, remove, transport (where applicable), investigate, oversee and dispose of such Hazardous Materials in accordance with applicable Law and Governmental Approvals or otherwise enter into a Supplement Agreement with the Design-Build Team, or order such Work pursuant to Directive Letter (provided that GDOT may not require any long term monitoring of Hazardous Materials under any such Directive Letter), with respect to same.

3. Notwithstanding the aforementioned or anything to the contrary in the Agreement, none of the following costs and expenses shall be chargeable to or reimbursed by GDOT:

(a) Costs and expenses to the extent attributable to Design-Build Team Releases of Hazardous Materials;

(b) Delay and disruption costs and expenses, except to the extent expressly set forth under the Agreement;

(c) Costs and expenses that could be avoided by the exercise of commercially reasonable efforts to mitigate and reduce cost; and

(d) Attorney's fees or other expenses incurred by Design-Build Team in demonstrating or determining the proportionate responsibility between the parties as to Design-Build Team Releases of Hazardous Materials, GDOT Releases of Hazardous Materials, Pre-existing Hazardous Materials, and/or Hazardous Materials due to any third party.

4. Nothing contained herein shall be interpreted to limit Design-Build Team's obligations with respect to Articles 7.8 or 7.9 of the Agreement.

EXHIBIT 12

RESERVED

EXHIBIT 13

RESERVED

EXHIBIT 14

DESIGN-BUILD TEAM'S DBE COMMITMENTS LIST

[To be provided with execution version]

EXHIBIT 15

RESERVED

EXHIBIT 16

RESERVED

EXHIBIT 17

RESERVED

EXHIBIT 18

MEASURES OF LIQUIDATED DAMAGES and NONREFUNDABLE DEDUCTIONS

1.1 For Late Interim Completion(s), Late Substantial Completion, and Late Final Acceptance

(a) Liquidated damages for late Substantial Completion for the Project shall equal $1,869 per day for each day that the Substantial Completion Date is later than the Substantial Completion Deadline, as the Substantial Completion Deadline may be extended pursuant to this Agreement.

(b) Liquidated damages for late Final Acceptance shall equal $1,869 per day for each day that the date of Final Acceptance is later than the Final Acceptance Deadline, as the Final Acceptance Date may be extended pursuant to this Agreement.

(c) Liquidated damages on account of any failure to achieve Final Acceptance by the Final Acceptance Date shall not be cumulative and in addition to Liquidated Damages under subpart (a) above where Substantial Completion is not achieved by the Substantial Completion Deadline, provided that where any such Liquidated Damages under subpart (a) cease to then accrue as a result of achieving Substantial Completion, and the Final Acceptance Date, as may thereafter be revised is not met, subpart (b) shall then apply.

1.2 Incident Based Liquidated Damages

Liquidated Damages upon the occurrence of the following, which shall not be cumulative, for any single occurrence. Where there are multiple incidents as set forth below contributing to a single occurrence, the highest applicable incident based Liquidated Damages relative to such occurrence shall apply.

1	Complete closure of SR 53 (all four lanes) as specified in Section 18.3.2.1.3 of the Technical Provisions	$15,000 per hour*
2	Complete closure of SR 53 WB as specified in Section 18.3.2.1.3 of the Technical Provisions	$10,000 per hour*
3	Complete closure of SR 53 EB as specified in Section 18.3.2.1.3 of the Technical Provisions	$10,000 per hour*
4	Complete closure of Lake Ranch Ct as specified in Section 18.3.2.1.3 of the Technical Provisions	$ 6,000 per hour*
5	Failure to open lanes as specified in in Section 18.3.2.1.3 of the Technical Provisions	$ 1,500 per hour*
6	Failure to open the existing SR 53 bridge as specified in in Section 18.3.2.1.3 of the Technical Provisions	$ 1,500 per hour*
7	Failure to adhere to Holiday traffic restrictions as required by Section 18 of the Technical Provisions	$ 1,500 per hour*

*In addition to liquidated damages, DB Team shall be liable for any fines assessed against GDOT.

1.3 Incident Based Nonrefundable Deductions

Nonrefundable Deductions upon the occurrence of the following, which shall not be cumulative, for any single occurrence. Where there are multiple incidents as set forth below contributing to a single occurrence, the highest applicable incident based liquidated damages relative to such occurrence shall apply.

1	Replacement of an individual in a Key Personnel position after submission of the Proposal for any reason, except as allowed under Article 10.4.1 of the Agreement	$5,000 per occurrence
2	Unreasonable failure to comply with any of its responsibilities per the requirements of Section 2 of the Technical Provisions including Project Management, Quality Management, Schedule, etc.	$ 5,000 per occurrence*
3	Failure to follow Comprehensive Environmental Protection Program procedures as required by Section 4 of the Technical Provisions	$ 9,000 per occurrence*
4	Causing environmental damage in contravention of Section 4 of the Technical Provisions and the latest approved Environmental Documents	$26,000 per occurrence*
5	A failure to follow the approved procedures outlined in the Utility Emergency Response Plan as required in Section 6 of Technical Provisions	$ 5,000 per occurrence*
6	Failure to establish and maintain traffic in accordance with an approved Transportation Management Plan in accordance with the Work, including in the Project and in Related Transportation Facilities as required by Section 18.2 and Section 18.3 of the Technical Provisions	$ 5,000 per occurrence*
7	Failure to respond to GDOT direction regarding changeable message signs as specified in Section 18.3.1 of the Technical Provisions	$ 1,250 per occurrence*
8	Failure to maintain existing property accesses as required by Section 11.4.3 of the Technical Provisions	$ 5,000 per occurrence*

*In addition to Nonrefundable Deductions, the DB Team shall be liable for any fines assessed against GDOT.

EXHIBIT 19

GEORGIA SECURITY AND IMMIGRATION COMPLIANCE ACT AFFIDAVIT

[Insert completed Form R in executed version]

EXHIBIT 20

TERMS FOR TERMINATION COMPENSATION

A. Compensation on Termination for Convenience, for GDOT Default, or for GDOT Suspension of Work

1. In the event of termination of the Agreement under Article 19.1 (Termination for Convenience) or Article 19.4 (Termination for GDOT Default or Suspension of Work), the Termination Compensation shall equal:

(i) That portion of the Contract Sum on account of (a) Work performed that has not already been paid; plus

(ii) The amount necessary to reimburse reasonable and documented out-of-pocket costs of third party and Affiliate Contractors to demobilize and terminate under Contracts between Design-Build Team and third parties or Affiliates for performance of Work, excluding Design-Build Team's non-contractual liabilities and indemnity liabilities (contractual or non-contractual) to third parties or Affiliates; plus

(iii) If termination occurs prior to Substantial Completion, Design-Build Team's own reasonable and documented out-of-pocket costs to demobilize (without duplication) and carry out termination obligations as may be directed by GDOT or required pursuant to the Agreement; minus

(iv) The sum of (i) the greater of (A) the proceeds received from insurance (including casualty insurance and business interruption insurance) that is required to be carried pursuant to Article 16.1 of the Agreement and provides coverage to pay, reimburse or provide for any of the costs and losses attributable to any Force Majeure Event, and (B) the proceeds received from insurance that is actually carried by or insuring Design-Build Team under policies solely with respect to the Project and the Work, regardless of whether required to be carried pursuant to Article 16.1 of the Agreement, and that provides coverage to pay, reimburse or provide for any of the costs and losses attributable to any Force Majeure Event (exclusive of payments on account of replacement Work performed and to be reimbursed under the builder's risk insurance coverage), plus (ii) the foregoing costs and losses that Design-Build Team is deemed to have self-insured pursuant to Article 16.3.3 of the Agreement; minus

(v) The portion of any Compensation Amounts previously paid to (or charged against) Design-Build Team that compensated Design-Build Team for Work attributable to the period after the Early Termination Date.

2. In the event of termination of the Agreement under Article 19.1 (Termination for Convenience) or Article 19.4 (Termination for GDOT Default or Suspension of Work), any such Termination Compensation shall be payable by GDOT as follows:

(i) For Termination for Convenience

(a) Termination for Convenience shall be valid and effective on the date set forth in the Notice of Termination for Convenience, which date shall not be more than three (3) months after the date the notice is delivered.

(b) GDOT shall deliver to Design-Build Team, in immediately available funds, within sixty (60) days after the Early Termination Date, the Termination Compensation due, less a holdback amount equal to GDOT's reasonable estimate of the costs Design-Build Team will thereafter incur to perform and complete its post-termination obligations under Article 19.5 of the Agreement, subject to Sections (ii)(b) - (d) below.

(ii) For Termination for GDOT Default or Suspension of Work

(a) If the Agreement is terminated due to Design-Build Team's exercise of its right to terminate under Article 19.4 of the Agreement, termination shall be valid and effective on the date notice of termination is delivered; and, subject to Articles 19.3.2 and 19.4.4, GDOT shall deliver to Design-Build Team, in immediately available funds, within sixty (60) days after the Early Termination Date, the Termination Compensation due, less a holdback amount equal to GDOT's reasonable estimate of the costs Design-Build Team will thereafter incur to perform and complete its post-termination obligations under Article 19.5 of the Agreement. In the event that the Termination Compensation is negative, then the Design-Build Team shall deliver the Compensation Payment due to GDOT within sixty (60) days after the Early Termination Date.

(b) GDOT shall pay the holdback amount to Design-Build Team within ten (10) days after Design-Build Team completes all its post-termination obligations under Article 19.5 of the Agreement.

(c) If as of the date GDOT tenders payment under clause (a) above the Parties have not agreed upon the amount of Termination Compensation due, then:

(i) GDOT shall proceed with such payment to Design-Build Team;

(ii) Within thirty (30) days after receiving such payment Design-Build Team shall deliver to GDOT written notice of the additional amount of Termination Compensation that Design-Build Team in good faith determines is still owing (the "disputed portion");

(iii) GDOT shall pay the disputed portion of the Termination Compensation to Design-Build Team in immediately available funds within thirty (30) days after the disputed portion is determined by settlement, final order or final judgment, and also shall pay interest thereon, at the Default Interest Rate from the Early Termination Date until paid; and

(iv) A failure by GDOT to effect payment by such date shall not entitle Design-Build Team to reinstatement of the Design-Build Team's Interest or to rescission of the termination.

(d) From and after the Early Termination Date until the Termination Compensation is finally determined and paid, the provisions of Article 19.10 of the Agreement shall apply.

(e) If it is determined by settlement or final judgment that the Termination Compensation due from GDOT is less than the payment previously made by GDOT, then within thirty (30) days after the date of settlement or final judgment Design-Build Team shall reimburse the excess payment, together with interest thereon at the Default Interest Rate from the date of overpayment until the date of reimbursement.

(f) Any amounts to be paid by GDOT pursuant hereto shall be subject to Default Interest Rate from the date that such payment shall be due until paid.

B. Compensation on Termination for Design-Build Team Default

1. Design-Build Team shall not be entitled to receive any compensation where the Agreement is terminated by GDOT pursuant to Article 19.3 as a result of a Design-Build Team Default if it has been determined by GDOT that the damages incurred by GDOT and costs to complete the Work as a result of the Design-Build Team Default exceed the unpaid balance of the Contract Sum. In no event shall Design-Build Team be entitled to any direct costs, including demobilization, associated with a termination by GDOT pursuant to Article 19.3. In the event that the Termination Compensation is negative, then the Design-Build Team shall deliver the Compensation Payment due to GDOT within sixty (60) days after the Early Termination Date.

C. Claims

1. Notwithstanding anything to the contrary herein, Termination Compensation shall include and be adjusted on account of any outstanding Compensation Event that is independent of the event of termination and which is not otherwise resolved as of the effective date of such termination. The Parties shall adjust the Termination Compensation by the amount of the unpaid award, if any, on the Compensation Event.

2. At GDOT's sole election, it may hold back from payment of the Termination Compensation for deposit into the GDOT Claims Account the amount of any claim of GDOT against Design-Build Team not resolved prior to payment. GDOT shall provide written notice to Design-Build Team of any such election, the subject claim and the amount deposited or to be deposited, prior to or concurrently with tendering payment of the Termination Compensation.

3. If as of the date GDOT tenders payment under clause (a) above the Parties have not agreed upon the amount of Termination Compensation due, then:

(i) GDOT shall proceed with such payment to Design-Build Team;

(ii) Within thirty (30) days after receiving such payment Design-Build Team shall deliver to GDOT written notice of the additional amount of Termination Compensation that Design-Build Team in good faith determines is still owing (the "disputed portion");

(iii) GDOT shall pay the disputed portion of the Termination Compensation to Design-Build Team in immediately available funds within thirty (30) days after the disputed portion is determined by settlement, final order or final judgment, together with interest thereon at the Default Interest Rate from the later of the two dates set forth in clause (a) above until paid; and

(iv) Failure by GDOT to effect payment by such date shall not entitle Design-Build Team to reinstatement of the Design-Build Team's Interest or to rescission of the termination.

4. If it is determined by settlement or final judgment that the Termination Compensation due from GDOT is less than the payment previously made by GDOT, then within thirty (30) days after the date of settlement or final judgment Design-Build Team shall reimburse the excess payment, together with interest thereon at the Default Interest Rate from the date of overpayment until the date of reimbursement.

EXHIBIT 21

Non-Collusion Affidavit

[Insert Completed Form B In Executed Version]

EXHIBIT 22

INITIAL DESIGNATION OF AUTHORIZED REPRESENTATIVES

GDOT's Authorized Representative:

GDOT hereby designates the persons from time to time serving as the Commissioner of GDOT as its Authorized Representatives and such other persons as the Commissioner may from time to time designate by delivering written notice thereof to Design-Build Team. Any such designations by the Commissioner may be limited in scope and duration and may be revoked at any time by delivery of written notice thereof to Design-Build Team pursuant to Article 24.11 of the Agreement.

Design-Build Team's Authorized Representative:

Design-Build Team hereby designates the persons from time to time serving as the Chief Executive Officer of Design-Build Team as its Authorized Representatives and such other persons as the Chief Executive Officer may from time to time designate by delivering written notice thereof to GDOT. Any such designations by the Chief Executive Officer may be limited in scope and duration and may be revoked at any time by delivery of written notice thereof to GDOT pursuant to Article 24.11 of the Agreement.

EXHIBIT 23

Drug Free Workplace

[Insert completed Form T in executed version]

EXHIBIT 24

DEPARTMENT OF TRANSPORTATION
STATE OF GEORGIA

SPECIAL PROVISION

ESCROW BID DOCUMENTATION

Scope and Purpose

The purpose of this specification is to preserve the bid documents of the successful proposer (DB Team) for use by the parties in any claims or litigation between GDOT and DB Team arising out of this Design-Build Agreement (the "DB Agreement").

The DB Team shall submit a legible copy of bid documentation used to prepare the bid for this DB Agreement to GDOT or their authorized representative at the Department, the Administrator of the Office of Bidding Administration. Such documentation shall be placed in escrow with a banking institution or other bonded document storage facility and preserved by that institution/facility as specified in the following sections of this specification.

Bid Documentation

The term "bid documentation" as used in this specification means all writings, working papers, computer printouts, charts, and all other data compilations which contain or reflect information, data, and calculations used by the DB Team to determine the bid in bidding for this project. The term "bid documentation" includes, but is not limited to, DB Team equipment rates, DB Team overhead rates, labor rates, efficiency or productivity factors, arithmetic extensions, and quotations from consultants, subconsultants, subcontractors, and material suppliers to the extent that such rates and quotations were used by the DB Team in formulating and determining the amount of the bid. The term "bid documentation" also includes any manuals which are standard to the industry used by the DB Team in determining the bid for this project. Such manuals may be included in the bid documentation by reference. Such reference shall include the name and date of the Publication and the Publisher. The term does not include bid documents provided by the Department for use by the DB Team in bidding on this project.

Submittal of Bid Documentation

The DB Team shall submit the bid documentation to GDOT or their authorized representative at the Department in a container suitable for sealing, no later than ten calendar days following award announcement of the DB Agreement by GDOT. A Notice to Proceed will not be issued until the acceptable documentation has been received. The container shall be clearly marked "Bid Documentation" and shall also show on the face of the container the DB Team's name, the date of submittal, the Project Number, the P.I. Number, the Contract Number, and the County(ies).

Affidavit

In addition to the bid documentation, an affidavit, signed under oath by an individual authorized by the DB Team to execute bidding proposals shall be included, as set forth in Attachment 1. The affidavit shall list each bid document with sufficient specificity so a comparison may be made between the list and the bid documentation to ensure that all of the bid documentation listed in the affidavit has been enclosed. The affidavit shall attest that the affiant has personally examined the bid documentation, that the affidavit lists all of the documents used by the DB Team to determine the bid for this project, and that all such bid documentation has been included.

Verification

Upon receipt of the bid documentation GDOT or their authorized representatives at the Department and the DB Team will verify the accuracy and completeness of the bid documentation compared to the affidavit. Should a discrepancy exist the DB Team shall immediately furnish GDOT or their authorized representative at the Department with any other needed total documentation. GDOT or their authorized representative at the Department, upon determining that the bid documentation is complete, will, in the presence of the DB Team's representative, immediately place the complete documentation and affidavit in the container and seal it. Both parties will deliver the sealed container to a banking institution or other bonded document storage facility selected by GDOT or their authorized representative at the Department for placement in a safety deposit box, vault or other secure accommodation.

Duration and Use

The bid documentation and affidavit shall remain in escrow during the life of the DB Agreement or until such time as the DB Team notifies GDOT of its intention to file a claim or its initiation of litigation against GDOT related to the Contract. Notification of the DB Team's intention to file a claim or litigation against GDOT shall be sufficient evidence for GDOT or their authorized representative to obtain the release and custody of the bid documentation. If no such notification is received and the DB Team has signed the final Standard Release Form, GDOT shall instruct the banking institution or other bonded document storage facility to release the sealed container to the DB Team, as set forth in Attachment 2.

The DB Team agrees that the sealed container placed in escrow contains all of the bid documentation used to determine the bid and that no other bid documentation shall be utilized by the DB Team in litigation over claims brought by the DB Team arising out of this contract.

Refusal or Failure to Provide Bid Documentation

Failure or refusal to provide bid documentation shall be deemed either:

1. Failure to execute the DB Agreement if the DB Agreement has not yet been executed or,
2. Material breach of the DB Agreement if the DB Agreement has been executed.

Should the DB Team fail to execute the DB Agreement as stated in 1 above, GDOT will retain the bid bond. Refusal of the DB Team to provide adequate documentation after execution of the DB Agreement will be considered material breach of the DB Agreement and the DB Team will be declared in default of the Contract. GDOT may, at its option terminate the DB Agreement for default. These remedies are not exclusive and GDOT may take such other action as is available to it under the law.

Confidentiality of Bid Documentation

The bid documentation and affidavit in escrow are, and will remain, the property of the DB Team. GDOT has no interest in, or right to, the bid documentation and affidavit other than to verify the contents and legibility of the bid documentation unless notification of the intention to file claim is received or litigation ensues between GDOT and DB Team. In the event of such notification or litigation, the bid documentation and affidavit shall become the property of GDOT.

Cost and Escrow Instructions

The cost of the escrow will be borne by the Department. GDOT or their authorized representative at the Department will provide escrow instructions to the banking institution or other bonded document storage facility consistent with this specification.

Escrow Agreement

A copy of the Escrow Agreement the successful bidder will be required to sign is provided as set forth in Attachment 3. The successful bidder (DB Team) agrees that they will sign the Escrow Agreement. Should the DB Team fail to sign the Escrow Agreement, when presented, GDOT will retain the bid bond. If the DB Agreement has been executed, and the DB Team fails to sign the Escrow Agreement, the DB Team may be declared in default of the Contract.

Payment

There will be no separate payment for compilation of the data, container or cost of verification of the bid documentation. All costs shall be included in the overall DB Agreement bid price.

EXHIBIT 24

Attachment 1

AFFIDAVIT

STATE OF GEORGIA
COUNTY OF FULTON

COMES NOW _____(Name)_____, ____(Title)_____ of ___(Company Name)_____ who, after having been duly sworn, on oath, state and depose as follows:

1.

This Affidavit is based upon the personal knowledge of the Affiant.

2.

_____(Company Name)_____ submitted a bid on Georgia Department of Transportation Project No. _____ , _____ COUNTY(IES) which bid was the best value bid, and a DB Agreement has been entered into between ___(Company Name)_____ and the Georgia Department of Transportation, known as DB Agreement No. _____.

3.

This Affidavit is given in compliance with the special provision entitled "ESCROW BID DOCUMENTATION" forming part of the DB Agreement Documents of DB Agreement No._____ _____.

4.

The Affiant attests that, in his capacity for __(Company Name)_____, he is personally aware the "Bid Documentation" which was used by the Company in determining, formulating, and submitting the bid on Project No.____, _____COUNTY(IES).

5.

The Affiant further states that he has examined the bid documentation which has been placed in a sealed container marked "Bid Documentation", and that all such Bid Documentation utilized by the Company in determining, formulating, and submitting its bid is contained in the sealed container so marked.

6.

Each bid document contained in the sealed container is separately listed on Exhibit A, which is attached hereto and incorporated herein as fully as if included in this Affidavit at this paragraph 6.

[SIGNATURE ON NEXT PAGE]

Further Affiant sayeth not.

_____
(Company Name)

By: _____
(Signature)

_____
(Print Name)

Its: _____
(Title)

Sworn to and subscribed before me this _____ day of _____ _____, 20_____.

_____
NOTARY PUBLIC

My Commission expires: _____

EXHIBIT 24

Exhibit A to Attachment 1

[to be provided with executed version]

EXHIBIT 24

Attachment 2

ESCROW RELEASE OF BID DOCUMENTS

This is to certify that on this _____day of _____, 20__, the sealed container identified as:

"Bid Documentation"

DB TEAM:

PROJECT NUMBER:

P.I. NUMBER:

CONTRACT

NUMBER: DATE OF

SUBMITTAL:

(Evidence by Agreement dated _____).

was released from escrow and personally handed to the below named individual acknowledging receipt, representing the DB TEAM/DEPARTMENT, by the ESCROW AGENT upon the presentation of the required documentation pursuant to Article IV of Attachment 3 to this Exhibit 24, Release from Escrow, of the agreement dated_____, 20___, a copy of such documentation is attached hereto.

Acknowledgment of Receipt:

_____

Acknowledgment of Release:

_____

ESCROW AGENT

ESCROW CONTAINER SEAL NUMBERS:

EXHIBIT 24

Attachment 3

Escrow Agreement for Bid Documents

THIS AGREEMENT is made and entered into this _____day of_____, 20___, by and among the Georgia Department of Transportation; an agency of the State of Georgia, hereinafter called the "DEPARTMENT"; and _____; hereinafter called the "DB TEAM"; and (GDOT's contracted escrow agent)_____, hereinafter called the "ESCROW AGENT".

WHEREAS, the Department awarded a project on _____, 20 ___, based on a bid proposal submitted by the DB TEAM, hereinafter called the "PROPOSAL", for the construction of Project Number _____ , _____County(ies), Georgia, hereinafter called the "PROJECT", pursuant to which the DB TEAM shall cause the work therein to be designed and constructed; and

WHEREAS, the DEPARTMENT and DB TEAM are desirous of entering into an Escrow Agreement, to provide for specific contingencies governing the escrow and control of the PROPOSAL bid documentation; hereinafter called "BID DOCUMENTS"; and

WHEREAS, the DEPARTMENT and DB TEAM desire the ESCROW AGENT to hold the BID DOCUMENTS of the DB TEAM;

NOW THEREFORE, for and in consideration of the mutual covenants contained herein, it is agreed by and between the parties hereto that:

ARTICLE I
ESCROW BID DOCUMENTATION

The parties hereto agree to the establishment of Escrow of the BID DOCUMENTS for the PROPOSAL. It is the understanding of the parties hereto that the DEPARTMENT shall pay the ESCROW AGENT, as determined by separate agreement, for the escrow of the BID DOCUMENTS submitted to the ESCROW AGENT under the terms of this Agreement.

ARTICLE II
ACKNOWLEDGMENT

By its signature below, the ESCROW AGENT hereby acknowledges receipt from the DEPARTMENT and DB TEAM of a sealed container bearing the DB TEAM'S name, address and

Project Number assigned by the DEPARTMENT and containing, as specified by the affidavit of the DB TEAM, the PROPOSAL BID DOCUMENTS for the aforementioned PROJECT.

ARTICLE III
DEPOSIT OF BID DOCUMENTS

The PROPOSAL BID DOCUMENTS shall remain on deposit with the ESCROW AGENT until those conditions of release, as specified in ARTICLE IV, RELEASE FROM ESCROW, are met. As long as the BID DOCUMENTS remain in escrow with the ESCROW AGENT, the ESCROW AGENT shall not allow any person access, to gain possession, or to in any way interfere with the sealed BID DOCUMENT container.

ARTICLE IV
RELEASE FROM ESCROW

Upon being presented, by the DEPARTMENT with a DB TEAM signed final Standard Release Form for the DB Agreement for the PROJECT, the ESCROW AGENT shall deliver to the DB TEAM the sealed container bearing the DB TEAM'S name and address and project number on it. The ESCROW AGENT is also authorized to release the BID DOCUMENT sealed container to the DEPARTMENT without the DB TEAM'S signed consent subject to the following conditions:

1. The DB TEAM has provided written notification to the Department of the DB TEAM'S intention to file a claim related to the DB Agreement for the PROJECT; or

2. The DB TEAM has initiated litigation against the Department relating to the DB Agreement for the PROJECT.

Prior to any release from escrow to the DEPARTMENT, the ESCROW AGENT shall verify that either condition of release to the Department, as stated above, has been met by providing written notice to the DB TEAM of the ESCROW AGENT'S intention to release the PROPOSAL BID DOCUMENTS to the DEPARTMENT. Such written notice from the ESCROW AGENT shall be sent by certified mail no less than ten (10) calendar days prior to release to the DEPARTMENT. Upon any release from escrow of the PROPOSAL BID DOCUMENT container the ESCROW AGENT shall cause the execution of Attachment 2, Escrow Release for PROPOSAL BID DOCUMENTS, as attached hereto and incorporated herein as if fully contained, by the party receiving the BID DOCUMENT container.

ARTICLE V
INDEMNITY

The DB TEAM agrees to indemnify and hold the ESCROW AGENT harmless against any loss, claim, damage, liability or expenses incurred in connection with any action, suit, proceeding, claim or alleged liability arising from this Escrow Agreement, provided, however, that the ESCROW AGENT

shall not be so indemnified or held harmless for its negligence or acts of bad faith by it or any of its agents or employees.

ARTICLE VI
NOTICES

All notices and other communication shall be in writing and shall be deemed to have been duly given and delivered if mailed by certified mail, return receipt requested, postage prepaid to the addresses stated herein:

DEPARTMENT:

Georgia Department of Transportation
ATTN: General Counsel
600 West Peachtree Street
Atlanta, Georgia 30308

DB TEAM:

[DB Team name]
[Attention: name]
[Address 1]
[Address 2]

ESCROW AGENT:

[GDOT's contracted escrow agent]
[Attention: name]
[Address 1]
[Address 2]

ARTICLE VII
DUTIES OF ESCROW AGENT

The duties and responsibilities of the ESCROW AGENT shall be limited to those expressly set forth herein and the ESCROW AGENT shall act only in accordance with this ESCROW Agreement.

Notwithstanding specific provisions hereunder, the ESCROW AGENT shall at all times act upon and in accordance with the joint written instructions of the DEPARTMENT and DB TEAM.

ARTICLE VIII
LAWS

This Escrow Agreement shall be deemed to have been executed in Fulton County, Georgia and the laws of the State of Georgia shall apply.

ARTICLE IX
ASSIGNMENT

This Escrow Agreement shall not be assigned without the written consent of all the parties hereto.

ARTICLE X
SURVIVAL OF CONTRACT

Except as may be expressly modified, all terms and conditions of this Escrow Agreement remain in full force and effect. The establishment of this Escrow Agreement is limited solely by the contingency of release of the PROPOSAL BID DOCUMENTS by the DB TEAM to the DEPARTMENT, as established by Article IV, Release From Escrow. Nothing contained herein shall alter the rights of the parties hereto.

The covenants herein contained shall, except as otherwise provided, accrue to the benefit of and be binding upon the successors and assigns of the parties hereto.

IN WITNESS WHEREOF, the parties hereunto set their hands and seals the day above first written.

DB TEAM:

BY:

(SEAL)

TITLE:

WITNESS

ESCROW AGENT:

BY:

(SEAL)

TITLE:

WITNESS

DEPARTMENT:

BY:

(SEAL)

TITLE:

WITNESS

ESCROW CONTAINER SEAL NUMBERS:

EXHIBIT 25

Opinion of Counsel

[Refer to Form S for appropriate format]

Georgia Department of Transportation

VOLUME 2

Technical Provisions
For

Design-Build Agreement

P.I. No. 0010212

SR 53 WESTBOUND AT CHATTAHOOCHEE RIVER BRIDGE REPLACEMENT PROJECT

CONTENTS

1 GENERAL 1-1
2 PROJECT MANAGEMENT 2-1
3 DESIGN AND SUBMITTALS 3-1
4 ENVIRONMENTAL 4-1
5 RIGHT OF WAY (ROW) – DB TEAM ACQUISITIONS 5-1
6 UTILITY ADJUSTMENTS 6-1
7 RIGHT OF WAY (ROW) – Additional Properties 7-1
8 GEOTECHNICAL 8-1
9 SURVEYING AND MAPPING 9-1
10 GRADING 10-1
11 ROADWAYS 11-1
12 DRAINAGE 12-1
13 STRUCTURES 13-1
14 RAIL 14-1
15 LANDSCAPE AND HARDSCAPE ENHANCEMENTS 15-1
16 SIGNING, PAVEMENT MARKING, SIGNALIZATION 16-1
17 INTELLIGENT TRANSPORTATION SYSTEMS 17-1
18 TRAFFIC CONTROL 18-1
19 MAINTENANCE DURING THE DESIGN-BUILD PERIOD 19-1
20 BICYCLE AND PEDESTRIAN FACILITIES 20-1
21 RESERVED 21-1
22 NOISE BARRIERS 22-1
23 TRANSIT 23-1

Volume 2 Attachments

Attachment 3-1 Manuals

Attachment 3-2 Special Provision 621 (Concrete Barrier)

Attachment 4-1 Environmental Commitments Table

Attachment 4-2 SP 107.23.H Legal Regulations and Responsibility to the Public – Protection of Federally Protected Species

Attachment 6-1 SS 107 Legal Regulations and Responsibility to the Public

Attachment 6-2 Utility Memorandums of Understanding (MOUs)

- Bellsouth Telecommunications, LLC
- Carter Communications
- Crown Castle
- Gainesville Water Resources
- Jackson EMC
- Southern Gas Company

Attachment 6-3 Utility Facility Relocation Acceptance Form Template

Attachment 11-1 Design Criteria Table

Attachment 11-2 Pavement Designs

Attachment 11-3 Fabric Detail

Attachment 12-1 MS4 Responsibilities for Design-Build Project

Attachment 12-2 SP 169 Post-Construction Stormwater BMP Items

Attachment 13-1 Structures Special Provisions

- SP 443 Elastomeric Profile Bridge Joint Seals
- SP 447 Modular Expansion Joints
- SP 449 Silicone Seal
- SP 449 Bridge Deck Joint Seals
- SP 500 Class D
- SP 500 HPC

SP 500 Light Weight Concrete

SP 500 Mass Concrete

SP 500 UHPC

SP 511 Mechanical Bar Splice

SP 581 Disc Bearings

SP 627 LRFD MSE Walls

SP 628 Permanent Soil Nailed Walls

SP 865 Manufacture of Prestressed Concrete Members

SP 999 Precast Deck Panels

Attachment 13-2 MASH Compliant GDOT Bridge Barriers

Attachment 13-3 Paving Rest Detail

1 GENERAL

1.1 General Overview

This Section 1 provides a general description of the Project and certain requirements. Comply with all requirements set forth in the DB Documents. Ensure the Design Documents for the Project are consistent with the following:

1. Environmental Documents Approvals
2. Approved Concept Report

1.2 Administrative Requirements

1.2.1 Errata to the Technical Provisions

Interpret the Technical Provisions and GDOT standards, policies, and specifications in accordance with Volume 1, Article 1.6 (Errata to the GDOT Standards).

1.3 Design Requirements

1.3.1 General Design Requirements

Adhere to the requirements of the Agreement and the Technical Provisions for the general administration and management of the Project, specifically including those provisions in Section 2 (Project Management) and Section 3 (Design and Submittals).

Coordinate with GDOT, adjacent Governmental Entities, and other third parties as appropriate to determine the design criteria, standards, and specifications of those components of Work that are constructed by the DB Team but maintained by others. For components of Work that impact or may impact the infrastructure of any Governmental Entity or third-party entity, conform to the design requirements of such entity.

1.3.2 Project Scope

Design and construct the Project as required by the DB Documents, including design, design-related activities, permitting, Utility Adjustments, construction, and related Work.

Do not rely on the physical description contained herein to identify all Project components. Determine the full scope of the Project through thorough examination of the DB Documents and the Project or as may be reasonably inferred from such examination.

The Work includes the replacement of the SR 53 westbound (WB) bridge over the Chattahoochee River/Lake Lanier (Structure ID 139-0020-0). Design and reconstruct the SR 53 westbound left-turn lane at the Lake Ranch Court intersection, offsetting from the current location. The Project is located approximately 4.5 miles west of Gainesville on SR 53 in Hall County, GA.

1.3.3 Transitions to Adjacent Infrastructure, Roadways and Facilities

Design and construct Project transitions and interconnections with adjacent infrastructure, roadway, facilities, and related appurtenances for compatibility and uniformity with all interfaces. Coordinate with Persons, including other contractors performing Work at or adjacent to the Site, to provide seamless transitions from the Project to any Work proposed, being developed, or existing. Remove any temporary transitions that are not intended to accommodate permanent traffic operations connecting the proposed improvements to existing roadways, and restore all areas within the Work or impacted by the Work. Minimize disruption to traffic operations and adjacent property access throughout the performance of the Work.

1.3.4 River/Lake Access

Prepare a written notification for GDOT distribution to property owners fronting or adjacent to local roads utilized to access any barge launching location(s), identifying anticipated dates of use of the local roads for DB Team's construction and barge launching operations. See Section 19 (Maintenance During the Design-Build Period) for requirements regarding maintenance and repair/restoration of any local roads utilized for hauling, staging, or other construction-related activity, whether within or outside of the Project limits.

2 PROJECT MANAGEMENT

2.1 General Requirements

2.1.1 Management Organization

Establish and maintain an organization that effectively manages all Elements of the Work. Operate an organization that communicates with GDOT to efficiently and effectively identify and resolve project delivery issues.

2.1.1.1 Project Meetings

Include all appropriate staff necessary at each meeting to make decisions regarding the subject matter to progress the Project and maintain the Project Schedule. Lead and facilitate the meetings; prepare and distribute meeting agendas a minimum of 24 hours in advance, and prepare and distribute meeting minutes within three Business Days after the meeting. Hold additional meetings and cause additional staff to attend all meetings if requested by GDOT or its representatives. At a minimum, hold, participate in, and prepare minutes for the following regular meetings with GDOT.

2.1.1.1.1 Weekly Meeting Requirements

No requirements.

2.1.1.1.2 Twice Monthly (Every Two Weeks) Meeting Requirements

Design and construction progress meetings to address such items as design coordination, submittals review, ITS communications, and traffic interruption reports.

2.1.1.1.3 Monthly Meeting Requirements

1. Project Schedule Review Meeting (held the first week of each month)
2. Payment Request/Progress Status Team Meeting (held the first week of each month)

As the Project progresses, hold work sessions with GDOT on Project technical design elements; these may include roadways, structures, Utility relocations, drainage and MS4, and other disciplines as needed to facilitate timely input from GDOT.

2.1.2 Requirements for GDOT Office and Equipment

Provide a Type 3 Engineer's Field Office as specified in Section 153 of the GDOT Standard Specifications. Provide high-speed internet connectivity per Section 2.1.4.

2.1.3 Partnering

No requirements.

2.1.4 Project Management Controls System (PMCS)

Use the Project Management Controls System (PMCS), provided by GDOT, throughout the Term of the Agreement for document management and transmittal, including workflows, file storage, communication, and correspondence.

This PMCS provides the following:

1. Centralized data that acts as a 'single source of truth'
2. Access to Project information
3. Built-in work processes for certain administrative elements of the Work
4. Automated ball-in-court tracking for certain processes
5. Project reporting

Use this system for all submittals and official Project documentation, including:

1. Correspondence
2. Payment Requests
3. Relief Event notices and Compensation Event notices
4. Draft and executed Supplemental Agreements
5. Project Management Plans in accordance with Section 2.2 (Management Plans)
6. Meetings/Meeting Minutes/Action Items
7. Requests for Information (RFIs)
8. Submittals, including those listed in Section 3 (Design and Submittals)
9. Project Schedule submittals, including those listed in Section 2.5 (Project Schedule Requirements)
10. Audits and nonconformance reporting (NCRs)
11. Punch Lists
12. Project Reporting
13. Document Management
14. Construction Drawing Management (including management markups, versions, and revisions)

Use the PMCS to perform Project responsibilities.

Additional requirements/guidelines of the system:

1. Use the PMCS to track and manage the Project and as an official record of all Project communication. Upload all Project-related information to the PMCS.
2. Designate a PMCS coordinator (an internal point of contact) and provide their name, phone, and e-mail to GDOT no later than seven Days after NTP 1.
3. Users of this PMCS must complete training prior to having access to the system provided by GDOT.
4. Provide high-speed internet connectivity (actual means to be agreed-on by GDOT) for GDOT to access the PMCS.
5. Upload, submit, track, and review submittals via the PMCS. Where physical samples are required, review and track the submittal via the system, and transmit the sample itself to the reviewer via traditional means.

6. Use the file naming convention provided in Section 2.1.4.1 (File Naming Convention).

Upload all submittals to the PMCS. Ensure that Design Documents comply with the naming convention requirements of GDOT's Electronic Data Guidelines (EDG). Ensure that Project documents transmitted via the system that are not specified in the EDG comply with the following electronic formats:

1. Submit documents generated in Computer Aided Design (CAD) applications (MicroStation V8 or InRoads) in Portable Document Format (PDF) generated by a PDF writer from the CAD application.
2. Scan documents that are marked up or unavailable in electronic format (drawings, sketches, correspondence, etc. generated by hand drafting methods) to Tagged Image Format version 6 [TIFF 6 (.TIF)] or latest update, Bitonal [or Black and White (or Line Art), on some scanners] (.tif) or PDF (.pdf), black and white with a resolution of 200 dpi using CCITT Group 4 (2d Fax) compression.
3. Submit documents that have been generated using PDF printer drivers (not scanned) via the system.
4. Submit electronic photographs in Joint Photographic Experts Group (JPEG) (.jpg) file format, sized at a minimum resolution of 1024 by 768 pixels.
5. Save grayscale or color photo images that are scanned in JPEG (.jpg) file format with medium to low quality compression at a resolution of 200 dpi.
6. Submit product data that is available for download from the manufacturer's website that has been generated using PDF printer drivers (not scanned) via the system.
7. Submit all design drawings in compliance with GDOT EDG, latest revision, and all policies and guidelines on GDOT's Design Manuals and Guides website:

   http://www.dot.ga.gov/PS/DesignManuals/DesignGuides

Use GDOT's PMCS for contract administration processes, including requests for information, Supplemental Agreements, Payment Requests, and DB Team official correspondence. Attend a training session(s) at GDOT's office or other mutually agreeable location within 30 Days of the execution of the Agreement or such time as agreed to by GDOT. Contact GDOT's project manager to schedule the training session(s).

Limited licenses will be provided by GDOT to the DB Team. Inquire with GDOT immediately after NTP 1 for the number of licenses assigned to the DB Team.

2.1.4.1 File Naming Convention

Use the file naming conventions shown in Table 2-1.

Table 2-1: File Naming Conventions

PROJECT		Project Number (i.e., 0010212 (7 digit))
Tracking No		PMCS-assigned process number, or user-defined tracking number
DocType		The 3-digit document type (e.g., LTR = Letter, TRN = Transmittal, RPT = Report)

Descr		Document title
Date		YYYY-MM-DD. (ex: July 4, 1776 would be represented as 1776-07-04)
Rev		The 2-digit revision or version number (if applicable)

Use the following file naming convention on all correspondence created or issued by the Project and for filing any document:

PI#_Tracking-###__Type_Description_Date*_Rev-##*

Clearly identify all FINAL versions of documents and save them in the **Final Deliverables** folder (where applicable) as follows:

PI_Tracking Number_DocType_Desc_Date_File_Name_Final

The following are file naming guidelines:

1. Correspondence Files: Include the name of the correspondent, an indication of the subject, the date of the correspondence, and whether it is incoming or outgoing correspondence in the file name.
2. Dates: Present dates 'back to front', with the year first (always given as a four-digit number), followed by the month (always given as a two-digit number), and the day (always given as a two-digit number).
3. Keep file names short but meaningful: Some words add length to a file name but do not contribute towards the meaning, for example words like "the", "a", and "and."
4. No spaces in file names: Use an underscore "_", a dash "-", heading fields, and words for ease in sorting. Use caps to distinguish words (i.e., Document_Management_Plan).
5. Numbers in file names: Include the zero for numbers 0-9 to maintain the numeric order when file names include numbers. This helps to retrieve the latest record number (i.e., 01, 02 … 99), unless it is a year or another number with more than two digits.
6. Special Characters: Do not use special characters such as @ # $ % ^ & *.,? in file names, as they can cause problems with uploading, viewing, and downloading documents over the internet.

Table 2-2: File Type Identification Table

File Type ID	File Type	Contains
CHG	Change	Change Management folder items
CLS	Close-out	Close-out documents, including Record Documents.
CMP	Compliance	Contract compliance documents, DBA, GA, FHWA
CST	Construction	All construction docs, unless have own type code
DAR	Daily activity Reports	Daily activity reports
DBA	DB Agreement	All DB Documents, other than Reference Documents

File Type ID	File Type	Contains
DIR	Directive	Directive Letters
ENV	Environmental	Environmental documents, all types incl. submittals
FED	Federal	FHWA materials
FIN	Financial	Final design documents, all types
HLD	Hold	Hold Points, including notices
IMG	Images	All photos and videos as submitted
LTR	Letters	All letters, to/from DB Team
MAN	Management	All management items, other than PLN
MGT	Management	Management Submittals from DB Team
MTG	Meeting	Meeting-related documents, all types
NCR	Non-compliance Report	All NCRs, whether from design or construction
NOT	Notice	Notices from DB team
PAY	Pay	App payment applications, of any type
PLN	Plan	Project Team management plans
PRE	Preliminary	Preliminary designs, all types
PUB	Public	Public information documents, all types
QAL	Quality	All quality docs, except NCRs and inspector daily reports
REF	Reference	Reference Documents (Attachment 3-1)
RFC		Released for Construction docs, including revisions
RFI		Requests for information
ROW	Right of Way	All docs related to ROW
SAF	Safety	DB Team Safety-related documents
SCH	Schedule	All schedule and SOV submittals, of any type
UTL	Utility	Utility documents

2.1.5 Document Management

Maintain an electronic and/or hardcopy document control system to manage, store, catalog, and retrieve all Project-related documents as needed to document to DB Team work and respond to inquiries or audits. Ensure record retention complies with the requirements included in the Retention Schedules for State Government Paper and Electronic Records, State Agency

Specific Schedules for GDOT, and any other applicable local, State, and federal guidelines unless otherwise directed by GDOT. Provide all documentation and content to GDOT at the time of the expiration or termination of the Agreement.

2.1.5.1 Backup of Electronic Files and Protection of Hardcopy Files

For documents retained by the DB Team, provide a secure, fireproof location with controlled access to store electronic and hardcopy backup files to protect them from loss, damage, and deterioration. For electronic files, provide off-Site backup.

2.2 Management Plans

Management plans are an essential part of effectively delivering the Project on time, on budget, and with high quality. Provide the required plans as set forth in this Section 2 and elsewhere in the DB Documents.

2.2.1 Management Plan Requirements

Submit the following management plans for GDOT review and acceptance, or as otherwise indicated:

1. Project Management Plan (PMP), pursuant to Section 2.2.2
2. Quality Management Plan (QMP), pursuant to Section 2.3.2
3. Safety Plan (for limited acceptance only), pursuant to Section 2.4.1
4. Incident Management Plan, pursuant to Section 2.4.6
5. Construction Phasing and Staging Plan, pursuant to Section 2.2.4
6. Project Schedule Workplan, pursuant to Section 2.5.8
7. Communications Support Plan, pursuant to Section 2.2.3
8. Comprehensive Environmental Protection Plan (CEPP), pursuant to Section 4.3.3
9. Hazardous Materials Management Plan (HMMP), pursuant to Section 4.3.4
10. Bridge Demolition Plan, pursuant to Section 13.5.4

2.2.2 Project Management Plan

Submit the Project Management Plan (PMP) that describes the organization, staffing, directing, and controlling the day-to-day operations necessary for effective decision-making and Project performance.

Include in the PMP the procedures and processes that ensure the dissemination of timely information to GDOT and the DB Team members to effectively manage the scope, costs, schedules, quality of, and the requirements applicable to the Project.

Also include in the PMP a Key Personnel organization chart, roles and responsibilities, approach to managing the design and construction phases, communications protocol, change/risk management process, and schedule development and updates.

2.2.3 Communications Support Plan

A critical objective for all projects is to maintain the trust, support, and confidence of the media and public throughout the life of the Project. In order to meet this objective, it is critical to proactively manage messages and communications to the media.

GDOT will prepare a Public Information and Communications Plan (PICP) and will coordinate specific communications strategies and tactics for the Project with the DB Team. GDOT is responsible for all communications with the media. Direct all inquiries from media to GDOT for responses.

Develop a Communications Support Plan that designates a member of the Project team to carry out the role of the Public Information Contact (PIC), who will be the point of contact to GDOT on behalf of the DB Team for public information and involvement activities throughout the Term of the Agreement. Make available the PIC or a designated DB Team member 24 hours a day, seven days a week.

The PIC shall ensure updated Project information is provided to GDOT in a timely manner.

When requested by GDOT, participate and provide necessary staff support in meetings with the public arranged and conducted by GDOT. During such meetings, be in attendance to assist GDOT in providing the public with an update on the progress the Project and discussing key issues as they emerge, or as requested by GDOT.

2.2.3.1 Disseminating Public Information

Led by the PIC, assist GDOT in the development of and review of public information materials. Activities shall include:

1. Assist in the review of materials regarding Project-related subjects, for use in meetings, news releases, telephone correspondence, newsletters, email, GDOT's web-based information tool, overhead dynamic and changeable message board signs, web alerts, maps, displays, renderings, presentations, digital renderings/animations, photos, brochures, pamphlets, and any other relevant public information materials.
2. Provide weekly Traffic Interruption Request summaries for public information purposes. Provide draft press releases and detour maps of planned impacts to affected stakeholders or the traveling public. Provide any lane closure and detour requirements 72 hours in advance of closure and detour activities.
3. Provide narrative content, photos and graphic information for weekly social media posts and monthly Project e-newsletters.
4. Support the planning and implementation of special events, including a groundbreaking ceremony at commencement of construction and ribbon cutting at Project completion.
5. Supply high-quality construction progress photos and video (detail images and aerial) monthly and at major construction milestones.
6. Provide Project-related information for the GDOT Project website, including:

    a. Narrative Project updates
    b. Project maps
    c. Digital renderings and/or animations

d. Frequently asked questions (FAQs)
e. Current Project activities addressing design and construction
f. Timing of road and ramp closures and openings
g. Any utility disruptions
h. Recommended route alternatives during closures

2.2.3.2 Photography

Provide monthly aerial photo submittals (both high-resolution and low-resolution digital files), a minimum of two photos of the entire Project, and three photos per phase at GDOT-specified locations on the Project for the various phases of construction. Take photos from the same angle, elevation, and location as previously taken, in order to show the progress of the Work from commencement of construction to Substantial Completion.

GDOT claims all data as its property. The DB Team is responsible for any photography equipment installation, including power, and maintenance of the equipment at all times. Label and catalog all photographs with the date and time taken and a brief description of the location and view.

File the electronic copies of all photographs in a single folder on the PMCS, cataloged in a logical manner as approved by GDOT.

Provide and operate, at a minimum, two streaming cameras to record the construction to begin on issuance of NTP 3 and continue through Substantial Completion Deadline. Submit the camera specifications and locations for GDOT's review and acceptance prior to installation. Ensure that the cameras can provide a timeline navigation system for selecting specific images and times, time/date overlay for instant viewing, downloading, and embedding.

2.2.4 Construction Phasing and Staging Plan

Prepare a Construction Phasing and Staging Plan that represents the DB Team's approach to perform the Work. A Construction Phase is a portion of the overall Project that provides logical termini for each proposed Phase of the Work which may be comprised of multiple Stages. The Construction Phasing and Staging Plan shall align and be consistent with the DB Team's Project Schedule including those Completion Deadlines shown in Exhibit 9. Construction Phasing and Staging Plan submittals shall be provided and reviewed in accordance with timing requirements and durations specified in Table 3-1. Include the following in the Construction Phasing and Staging Plan:

1. Narrative that describes how and in what order each Construction Phase and Stage will be accomplished to complete the Work as specified by the DB Documents. Identify any Design Submittals associated with each Construction Phase.
2. Construction Phasing and Staging layout (scale: 1 inch = 200 feet) including lane configuration and traffic management of the Project during the different Phases and Stages of Construction.
3. Additional supporting documentation as requested by GDOT.

2.3 Quality Management Requirements

2.3.1 Design-Build Team Responsibilities

Assume full responsibility for the quality of the Work. Ensure that the Work is delivered in accordance with DB Documents, including but not limited to the environmental and permit commitments, Released-for-Construction (RFC) plans, shop drawings, working drawings, and specifications.

Develop, implement, and update the QMP for the Term of the Agreement such that it describes the system, policies, and procedures that ensure the Work meets the requirements of the DB Documents and provides documented evidence of same.

2.3.2 Quality Management Plan

2.3.2.1 Quality Management Plan Requirements

Submit for GDOT review and acceptance as follows.

The QMP shall consist of three sections:

1. The Administration portion of the QMP shall include the following:
    a. A quality policy statement that contains a complete description of the quality policies and objectives that the DB Team will implement throughout its organization and demonstrates the DB Team senior management's commitment to implement and continually improve the quality management system for the Work.
    b. Organizational requirements with contact information of the DB Team's Organization as defined
    c. Roles and responsibilities of the quality personnel, their relationship to the production personnel, and the quality-specific responsibilities of production personnel
    d. A plan and written procedures for quality checks and reviews
    e. Document control and quality records management processes and procedures
    f. DB Team's internal compliance auditing processes, procedures and documentation
    g. Quality training plan of relevant staff
2. The Design Quality Management Plan (DQMP) shall comply with the requirements set forth in the *GDOT Design-Build Manual*. The plan must also include a process for independent analytical checks and written procedures set forth in Section 1.3 of the *GDOT Bridge and Structures Design Manual*.
3. The Construction Quality Management Plan (CQMP) shall comply with the requirements set forth in the *GDOT Design-Build Manual*, including the *GDOT Design-Build Construction Management SOP,* and the *GDOT Construction Manual*. In addition:
    a. Describe how the DB Team will develop and use forms and checklists to facilitate and document quality efforts, including pre-work activity checklists that depict all items required to perform the particular design, construction, and operational efforts,

such as means and methods, Subcontractor involvement, materials, and inspection or testing requirements.

b. Document approach to coordinate and maintain records for all required inspections and tests that will be performed by GDOT in accordance with *GDOT Design-Build Construction Management SOP* and the *GDOT Construction Manual*.
c. Describe the methods, processes, and procedures to provide for the effective implementation and documentation of the environmental protection, training, compliance, and monitoring program.
d. Describe approach to accommodate and coordinate with GDOT provided construction engineering acceptance inspection and testing.
e. Describe approach to accommodate and coordinate with GDOT provided plant inspection(s), testing and certification of plant produced materials at existing GDOT approved plant locations, such as for precast/pre-stressed concrete, asphalt, and structural steel fabrication.
f. Describe approach to accommodate and coordinate with GDOT in the Final Acceptance and project closeout process

2.3.2.2 Quality Management Plan Updates

The DB Team or GDOT may initiate changes to the QMP (including clarifications, modifications, additions, and deletions) after it has been approved. Changes initiated by GDOT are made under GDOT's approval authority. Any revisions to the QMP initiated by the DB Team or CQAM require prior GDOT approval.

Maintain and update the QMP to ensure it is accurate and up-to-date, including the following information:

1. The organizational chart identifying all quality management personnel, their roles, authorities, and line reporting relationships.
2. Names and descriptions of the roles and responsibilities of all quality management personnel and including which personnel have the authority to stop Work.

Revise the QMP within 14 days of GDOT or DB Team detection of a substantial or systemic problem related to the Work as a result of audits, or as directed by GDOT. Include with submissions and all updates to the QMP both a clean copy and a copy tracking all changes since the previous approval.

2.3.3 Nonconforming Work and Corrective Action

A Nonconformance Report (NCR) process shall be required to document, report and track work that fails to conform to the requirements of the DB Documents. NCRs shall be issued as a result of such non-conformances. Examples of nonconformance's include physical defects, test failures, incorrect or inadequate documentation or changes from the design processes, inspection or test procedures described in the Project QMP.

GDOT will implement a web-based management system that will have the capability for documenting and implementing the NCRs that includes the description of the NCR, corrective action, action to prevent, the defined roles, dispositions, tracking log, and work flow states.

The DB Team, CQAM, or GDOT can initiate an NCR. Only the initiating party may close an NCR they initiated. The Originator closes the NCR document once all requirements have been met. An NCR cannot be closed until all requirements have been met and the disposition approved by GDOT.

Provide a full description of the NCR's nature, date, location, and any other pertinent facts, and also indicate the root cause, corrective action(s), and other action(s) to prevent its recurrence. The responsible organization shall submit a proposed disposition to GDOT of the Nonconforming Work that has been reviewed and approved by the DB Team's Quality Assurance Manager (QAM) and EOR. If the disposition is not accepted by GDOT, the NCR will remain opened until the disposition is accepted by GDOT.

DB Team shall comply with the NCR requirements set forth in the *GDOT Design-Build Manual* including the *GDOT Design-Build Construction Management SOP*. In addition, the QAM shall maintain a log of all NCRs and submit a report upon request to GDOT providing the current status.

2.3.4 Quality Terminology

Quality terminology, unless defined or modified elsewhere in the DB Documents, has the meaning defined in ISO 9001.

2.3.5 Responsibility and Authority of DB Team Quality Personnel

Comply with the requirements set forth in GDOT Standard Specifications, and *GDOT Design-Build Manual* including the *GDOT Design-Build Construction Management SOP*.

The DB Team's QAM, Design Quality Assurance Manager (DQAM) and Construction Quality Assurance Manager (CQAM) shall have the authority to suspend all or a portion of the Work because of quality-related issues.

2.3.5.1 Quality Assurance Manager

Designate a Quality Assurance Manager (QAM) whose responsibilities include developing and updating the QMP, ensuring that all Elements of Work are performed in accordance with the DB Documents, and ensuring adequate staffing and expertise is being utilized for the DB Team's quality efforts.

The QAM shall have defined authority for ensuring the establishment and maintenance of the Management Plans and reporting to GDOT on the performance of the Management Plans.

The QAM reports directly to the person or group with overall Project management responsibilities, such as the Project Manager, an off-Site principal with binding authority for the DB Team, or an executive oversight committee established for the Project. The QAM can be an employee of the DB Team, the DQAM, or the CQAM, but cannot be both the DQAM and CQAM.

Ensure the QAM has recent experience in the management of a quality management program of similar size and complexity as the Project.

2.3.5.2 Design Quality Assurance Manager

Designate a Design Quality Assurance Manager (DQAM) who has overall responsibility for the DQMP. The DQAM is responsible for verifying and validating that the procedures required by the QMP are being administered. The DQAM reports to the QAM. The DQAM can also be the QAM but cannot be the CQAM.

In accordance with this Section 2.3.5.2 and the QMP, the DQAM certifies that all Design Documents have been subjected to all required QC checking procedures; all documentation has been completed and filed in an acceptable manner; and all design packages have been subjected to a QA prior to submittal to GDOT or prior to release.

The DQAM shall monitor to ensure the DQMP results in Design Work that is:

1. Accurate
2. Conforming to professional standards of practice
3. Compliant with all legal requirements and standards mandated by the DB Documents
4. Fit for purpose and function as specified or implied in the DB Documents

Ensure the DQAM is a Licensed Professional Engineer in the State of Georgia and has recent experience in the design of highway or bridge projects of similar size and complexity as the Project. Generally, the DQAM must have equal or greater qualifications and experience as the EOR.

2.3.5.3 Construction Quality Assurance Manager

Employ a Construction Quality Assurance Manager (CQAM), who has overall responsibility for development and implementation of the CQMP. The CQAM is responsible for implementing, monitoring, and adjusting the processes to ensure acceptable quality. The CQAM reports directly to the QAM. The CQAM can also be the QAM but cannot be the DQAM.

The CQAM is the responsible for implementing quality planning and coordinating with GDOT's testing and inspection requirements. Do not assign the CQAM to perform conflicting duties on the Project. The CQAM shall have the authority to stop any Work that does not meet the standards, specifications, or criteria established for the Project.

The CQAM or a designated assistant to the CQAM shall be on the Project at all times Construction Work is being performed. The CQAM shall be on the Project Site within two hours of being notified of a problem regarding the quality of any Work being performed by the DB Team, any of its Subcontractors, or agents. The CQAM or a designated assistant to the CQAM shall be on the Project Site when control points inspections by GDOT occur.

Ensure the CQAM has recent experience in construction quality management for highway or bridge projects of similar size and complexity as the Project.

2.3.5.4 Control Point Inspections

A control point is a point in time when construction has proceeded to a defined stage and at which representatives of the DB Team have determined that the Work is ready for GDOT inspection(s).

Notify GDOT 24 hours in advance of the actual inspection for the following activities: pre-pour conferences; pre-pour checks for footing rebar, cap rebar, column rebar, deck rebar, approach slab rebar, and barrier wall rebar; driving piles; setting beams; subgrade compaction; sub-base compaction; and compaction under the approach slabs.

The CQMP shall specify processes for monitoring the progression of Work through the tracking of control points. The process shall be designed to aid in progressing Work, verifying payments, and avoiding duplicate inspection, testing, and reporting. Provide this information on the Two-Week Detail Schedules required by Section 2.5.9 (Two-Week Detail Schedule Requirements) for all upcoming Work to be inspected.

GDOT or the DB Team may identify additional control points, subject to acceptance by GDOT, to be included at any time throughout the Project. Such additions, individually or in aggregate, shall not constitute a Compensation Event or Relief Event. GDOT will coordinate to define the procedures and criteria for additional control points.

2.3.6 Final Inspection

At the completion of constructed elements of the Work, the CQAM will jointly conduct a final inspection with GDOT and the DB Team.

During the inspection, GDOT, the CQAM, and the DB Team will jointly review Punch List items and an agreed date of correction of the items.

2.3.7 Quality Documentation

Maintain design quality records in an auditable format according to the QMP procedures. GDOT has the right to audit the quality records for compliance with the QMP and the Design-Build Documents requirements at any time. Upon completion of the Project, the quality records shall be turned over to GDOT.

At GDOT's discretion, GDOT may perform periodic audits of the DB Team's quality management process and related documentation.

2.4 Safety and Security

Assume sole responsibility for the safety of personnel and of the general public affected by the Project. See Section 2.4.1 (Safety Plan) regarding basic Safety Plan requirements.

Incorporate the following requirements into the Project and include them in the Safety Plan to ensure that the Project is a safe and secure environment for all individuals working on the Project. The prevention of accidents during execution of the Project shall be a primary concern of all participants and shall be the responsibility of all levels of the DB Team. Safety shall never be sacrificed for production but shall be considered an integral part of an efficient and quality Project.

Safety and security procedures shall include and/or address the following:

1. Safety and health standards
2. Roles and responsibilities of the safety/security staff

3. Contractors (meaning prime Contractors and Subcontractors) having a Safety Director and an accepted safety manual (or plan) available to all employees
4. Contractors holding periodic on-Site safety meetings
5. Contractors conducting periodic on-Site safety inspections
6. Contractors providing safety training for all new employees and refresher training for all employees
7. Contractors conducting drug screening for all new hires
8. Contractors establishing daily housekeeping and clean-up procedures
9. Possible employee sharing of accident prevention savings
10. First-aid and medical kits readily available
11. Site security plan, possibly including such items as restricted parking near vulnerable structures, physical barriers (fences, barricades, etc.), coordinated efforts with local law enforcement officials during heightened threat levels, video surveillance, alarm systems, emergency telephones, etc.
12. Emergency preparedness and incident management plan, including roles and responsibilities, emergency evacuations, communications, first responder awareness training, and field drills
13. Establishment of an employee identification (ID) system
14. Level and frequency of audit and oversight safety/security reviews to be performed by GDOT, FHWA, independent consultants, and/or other agencies (as applicable)
15. Safety and security periodic reporting (no less than monthly)

In addition, conduct appropriate threat and vulnerability assessments and take into consideration throughout the Project's life cycle. The transportation elements of the Project could have a significant impact on regional safety and security plans.

2.4.1 Safety Plan

Submit to GDOT for acceptance a comprehensive safety plan (Safety Plan) that is consistent with and expands upon any preliminary safety plan submitted with the Proposal. GDOT acceptance is limited to verifying the Safety Plan appears to be specific to the Project. In the Safety Plan, fully describe the DB Team policies, plans, training programs, Work Site controls, and Incident response plans to ensure the health and safety of personnel involved in the Project and the general public affected by the Project during the Term of the Agreement.

Include in the Safety Plan procedures for immediately notifying GDOT of all Incidents arising out of or in connection with the performance of the Work, whether on the Site or not.

Provide access to the Safety Plan and safety training to GDOT and their representatives prior to entry to the Project Site.

2.4.2 Safety Management

Provide health and safety leadership and promote and support a safe working environment. All DB Team management and Contractors shall support the DB Team's safety personnel in the implementation and enforcement of the Safety Plan program.

Designate a Safety Manager responsible for the development of the Safety Plan and the enforcement of safety and health policies, procedures, and work practices. The Safety Manager shall provide Project direction to maintain a safe, healthy, and secure work environment for all employees, Contractors, GDOT personnel, and the general public. The Safety Manager shall have the authority to suspend all or a portion of the Work because of public or worker safety-related issues.

Field supervisors and managers shall be responsible for monitoring their direct hire employees and Subcontractors to ensure that the Work is being performed in a manner consistent with safety policies, procedures and work practices of the DB Team. They are responsible for promoting a safe, healthful and secure work environment for workers and visitors that is free from violence, threats, harassment, and intimidation, and protects the general public from harm in connection with jobsite operations.

All workers are responsible for planning and completing all work in a safe manner by following all applicable policies, procedures, and safe work practices.

2.4.3 Worksite and Jobsite Analysis

Conduct and require of each Contractor and Subcontractor a job hazard analysis to be performed at the beginning of each shift and whenever there is a change in the task or in the environmental conditions.

2.4.4 Hazard Prevention and Personal Safety

The prevention of accidents during execution of the Project shall be a primary concern of all participants and shall be the sole responsibility of all levels of DB Team's management. Safety shall never be sacrificed for production and shall be considered an integral part of an efficient and quality Project.

2.4.5 Training

The Safety Manager shall ensure that all personnel on the Project are provided a thorough safety orientation and periodic refreshers on the Project site safety requirements. The safety orientation shall include:

1. Roles and responsibilities
2. Hazard communications
3. Job hazard analysis
4. Reporting of incidents and accidents
5. Drug and alcohol policies
6. Driving policies
7. Disciplinary procedures
8. General health and safety requirements including proper usage of personal protective equipment (PPE)
9. General Site safety rules

2.4.6 Incident and Emergency Management

Prepare for GDOT review and comment the Incident Management Plan for responding to Incidents and Project and Work Emergencies. Identify in the plans responsibilities and procedures for responding to Incidents and Emergencies, including coordination and cooperation with emergency responders in the performance of their normal duties.

The Incident and Emergency management plan(s) shall include:

1. The DB Team's Incident response team availability.
2. The DB Team's Incident response team training to effectively respond to accidents, incidents and Emergencies.
3. Incident Site security, including traffic control measures and eliminating hazards to other road users.
4. Debris clearing and site assessment for damage repair.
5. Reporting and evaluation protocol and procedures prior to the dispatch of the DB Team's response crews or arrival of first responders.

2.5 Project Schedule Requirements

Comply with the Critical Path Method (CPM) Project Schedule requirements as defined in this Section 2.5 and in the publication *CPM in Construction Management*, latest edition, by James J. O'Brien and Fredric L. Plotnick. The DB Documents will govern in case of discrepancy between the DB Documents and *CPM in Construction Management*.

Prepare the Project Schedule as a computer-generated CPM graphic diagram that utilizes the Precedence Diagram Method (PDM) and clearly delineates the relationships between Work activities. Include and illustrate all significant Work activities that occur throughout the duration of the Agreement in sufficient detail to monitor and evaluate design and construction progress and to denote changes that occur from commencement of the Work to Final Acceptance of the Work. Indicate the duration of each activity, the order and interdependence of activities, and the sequence for accomplishing the Work. Define the timeframe for completion of the Project and achievement of all Completion Deadlines and durations specified in Volume 1, Exhibit 9 (Milestone Deadlines). Align the Project Schedule and Construction Phasing and Staging Plan to accurately reflect the latest approach and planning for the prosecution of the Work. Ensure that all Work sequences are logical and that the Project Schedule indicates the coordinated plan for performing the Work and accurately records the Work as it is completed. GDOT and Customer Groups will rely on the Project Schedule for timing of Owner-performed Work, reviews, and oversight activities; and for coordinating with, monitoring, and evaluating the DB Team's progress.

Project Schedule refers to any of the following: Baseline Project Schedule, Revised Baseline Project Schedule, or Project Schedule Updates, as further defined in this Section 2.5 and as appropriate for the context in which they are used.

2.5.1 Baseline Project Schedule Requirements

The Baseline Project Schedule is the initial Project Schedule submittal representing the DB Team's plan to complete performance of the Work beginning on the date of NTP 1 to Final

Acceptance of the Work. In the Baseline Project Schedule, show the plan to complete the Project within the Completion Deadlines and durations specified in Exhibit 9. Do not show any Work activities with progress (no actual dates) in the Baseline Project Schedule. Comply with the following Baseline Project Schedule requirements:

1. Set the data date on or before the date of NTP 1 using a beginning of day convention.
2. Utilize a Work Breakdown Structure (WBS) and activity codes to plan, analyze, monitor, and organize all Work activities shown in the Project Schedule. Coordinate with GDOT prior to submittal of the Baseline Project Schedule to ensure an adequate WBS and activity codes have been developed and assigned to each activity to the satisfaction of GDOT. GDOT reserves the right to request additional WBS levels and activity codes be added and assigned throughout the duration of the Agreement. Comply with the following Project Schedule organization requirements:

    a. Ensure activities are mapped to, organized by, and rolled-up to a deliverable-based, hierarchal WBS. Utilize the first level of the WBS as the Project itself. Include discrete nodes at the second level of the WBS for the following: Project Management, Environmental and Permitting, Design, Right of Way, Utilities, Procurement, Construction, and Close-out. Reflect the DB Team's overall approach to the planning, scheduling, and execution of the Work in the organization and breakdown of the WBS. Include WBS levels for all Project-specific locations/alignments, Work Elements/Work packages, phasing, staging, sequencing, design, and deliverable requirements. Identify each design package required for construction phasing and sequencing and identify each stage of the design in the design phase WBS. Align the construction phase WBS with the DB Team's Construction Phasing and Staging Plan. Remain consistent with the order and hierarchy number of each specific level of the WBS utilized. The DB Team may further develop and detail the WBS; however, any modifications cannot alter or interfere with these WBS requirements or the ability to summarize to the required WBS levels.
    b. Include the following activity codes assigned to each activity: Work Element (each individual bridge, retaining wall, noise wall, drainage run, etc.), location/alignment (each mainline, connector-distributor, ramp, and crossing street and may be further defined by geometric limits such as sections for station-to-station, inside/outside, etc.), Work type (environmental, roadway, drainage, structures (bridges, retaining walls, noise walls), landscaping, etc.), responsibility (party responsible for each activity with individual Subcontractors identified), and construction phase/stage as specified by the DB Documents and pertinent to the DB Team's Construction Phasing and Staging Plan, approach, means and methods. Use only Project-level (not global) activity codes. Include the PI number in the description of all activity code definitions (i.e. PI######_Work Type; PI######_Responsibility; etc.).

3. Use standard and consistent activity identification numbers and activity textual descriptions (aka activity names) in a manner acceptable to GDOT. Comply with the following:

a. Use a coding structure for activity identification numbers with no spaces, hyphens, symbols, or special characters. Do not modify, reassign, or reuse activity identification numbers once assigned to an activity.
b. Ensure each activity is uniquely named and consists of a verb, noun, and location in the activity description (aka activity name) and is consistent with its WBS and activity code assignments. Include identifiable physical locations within definable geometric limits and Work features in each activity description such as location/alignment, station-to-station sectioning, and specific retaining wall or bridge, bent and span numbers, and drainage structure numbers. For design and preconstruction activities, include identifiable feature of Work, such as specific design package, submittal, ROW parcel, permit type, or procurement item in the activity description.

4. Fully detail all Work and activities necessary to complete the Work as specified by the DB Documents and pertinent to the DB Team's approach, means, and methods. Break the Work into discrete activities associated with only one operation and into sufficient detail to readily identify, evaluate, and measure progress. Include activity sets for all pre-construction, design, construction, and post-construction Work, including:

a. NTP 1, NTP 2, NTP 3, and each Completion Deadline specified in Exhibit 9. Utilize a milestone activity type for each.
b. Design-phase Work and submittals shown in Table 3-1. Include distinct activities for the development, submittal, review, and approval of each submittal. Ensure the Staged Design Submittals, Construction Phasing and Staging Plan, and Project Schedule are aligned and consistent.
c. Environmental Document and Permit Acquisition Work including Work shown in Table 4-2 and Table 4-3. Include distinct activities for the development, submittal, review, and approval/issuance of each.
d. Right of Way (whether State Proposed/State Acquired or DB Team Proposed/DB Team Acquired), Right of Entry, and easements Work. Include distinct activities for the appraisals, negotiations, settlements or agreements, and acquisitions of each specific parcel.
e. Utilities and Utility Adjustment Work, as applicable and in accordance with the DB Documents. Include distinct activities for each adjustment and relocation.
f. Owner or other third-party scopes of Work and for interfaces with other projects, localities, municipalities, and other Governmental Entities.
g. Shop drawings and long-lead material and equipment items. Include distinct activities for preparation, submittal, review, and approval of all shop drawings and separate activities for fabrication and delivery.
h. Procurement of all major Subcontractors and trade packaging.
i. Project start-up, site setup and mobilization.
j. Permanent Construction Work, demolition of existing/selective demo, and major temporary work activities. Sufficient detail for Construction Work may be achieved as follows:

i. For bridge structures Work, indicate each element of individual bents (piles, footings, columns, caps, with separate activities for formwork,

rebar, concrete placements, strip and cure times); each element of Work in individual spans (girders, strip seal joints, decks with separate activities for formwork, rebar, concrete placements, strip and cure times); individual approach slabs, railings, and miscellaneous other bridge Work.

ii. For cast-in-place retaining wall structure Work, indicate each broken-out by excavation, formwork, rebar, concrete placements, strip and cure times, and back-fill; and for mechanically-stabilized earth (MSE) walls, indicate each broken-out by excavation, leveling pad, lifts, settlement periods, wall caps, and related Work.

iii. For sound wall structures Work, indicate each broken-out by excavation, post piles/foundations, panel foundations, posts, panels, and related Work.

iv. For road Work, indicate individual runs of pipe and drainage structures; individual box culverts; individual detour roads; clearing and grubbing, embankment, excavation, base, paving layers, signing, striping, guardrail, water, sewer, roadway electrical and lighting; and other miscellaneous elements within definable geometric limits such as location/alignment and station-to-station sectioning.

v. For ITS and tolling, include structure foundations, structure supports, conduits, cabinets, power conductors, fiber optic, ITS equipment, cable splicing, testing, and start-up, and other related Work. Include activities for replacement Video Detection System (VDS) and new traffic detection installation, as applicable and in accordance with the DB Documents.

k. Submittal and execution of all Punchlist and Project Closeout Work.

5. Use durations in whole Calendar Days with a maximum duration of 20 Working Days, and not less than one day, except for long-lead procurement activities or as otherwise stipulated in the DB Documents or unless approved prior by GDOT. Ensure activity durations represent the anticipated work effort to complete the task, reflect planned production rates, and do not conflict with any time requirement in the DB Documents.
6. Include appropriate logic ties necessary to complete the Work as specified by the DB Documents and pertinent to the DB Team's approach, means and methods. This includes sufficient hard logic (aka construction logic) and sufficient preferential logic (aka trade flow or soft logic). Include preferential logic ties that dictate the planned flow of Work on an early date basis, as well as sufficient logic ties to ensure the late date basis represents a reasonable plan, production rates, and resource constraints that can be met. Explicitly identify resource constraints using activity relationships and a detailed description in the Project Schedule Narrative. Comply with the following Project Schedule logic requirements:

   a. Ensure all activities, except for NTP 1 start milestone and each Completion Deadline finish milestone, have a minimum of one predecessor activity and one successor

activity. Ensure each activity has at least one "start" predecessor (i.e. FS0d, SS0d) and one "finish" successor (i.e. FS0d, FF0d).

b. Use finish-to-start (FS) relationship types with no leads or lags whenever possible. Finish-to-finish (FF) or start-to-start (SS) relationship types shall generally be avoided. Do not use start-to-finish (SF) relationship types.

c. Identify any lag proposed and provide an explanation in the Project Schedule Narrative for the purpose of the lag. All lags will be reviewed for approval by GDOT as part of the Baseline Project Schedule review. Use of lags with a negative value are not allowed. Do not use relationship lags when the creation of an activity will perform the same function, including:

i. SS lags where lag is greater than predecessor's original duration.
ii. FF lags where lag is greater than successor's original duration.
iii. FS lags greater than zero days.

7. Constrain start milestone activity for NTP 1 with a "Start On or After" primary constraint date to reflect executed NTP 1 date using beginning of day convention.
8. Show Project Schedule float calculations based on each Completion Deadline specified in Exhibit 9. Use the following convention for each Completion Deadline. For clarity, the following example is shown for Substantial Completion Deadline:

a. Include a finish milestone with activity name "Forecasted Substantial Completion Date". This activity shall have as predecessors all the activities that must be completed prior to the Completion Deadline. Do not constrain this activity. Assign any suitable successors to the Completion Deadline to this activity.

b. Include a finish milestone with activity name "Substantial Completion Deadline". Constrain this activity with a "Mandatory Finish" primary constraint date reflecting the Completion Deadline shown as a Calendar Day using end of day convention. This activity shall have sole predecessor "Forecasted Substantial Completion Date" tied with a finish-finish relationship and zero lag value. Do not assign any successors to this activity.

c. Assign activities "Forecasted Substantial Completion Date" and "Substantial Completion Deadline" to the same calendar, WBS node, and activity codes.

9. Do not sequester float calculations. Date constraints, other than those required by the DB Documents, will not be allowed unless approved in writing by GDOT. Identify any proposed constraints and provide an explanation for their purpose. Do not use "As late as possible" and "Mandatory" constraint types for any proposed constraints. Do not use or reference External Dates.
10. Utilize the Gregorian calendar and comply with the following requirements:

a. Use only Project-level calendars. Do not use or reference global level calendars. Do not use "Inherit holidays and exceptions from Global Calendar" option.

b. Identify work days and non-work days and include identifiable PI# in the description of each calendar (i.e. "PI######_5-day work week"). Maintain the same hourly work/non-work times and same hours/day in each calendar utilized.

c. Satisfactorily account for anticipated adverse weather. Use calendar non-work days clearly defined for anticipated adverse weather or other equally effective means as approved by GDOT. With submittal of the Baseline Project Schedule, provide in writing the planned methodology to account for anticipated adverse weather.

11. Show maintenance of traffic/closure or restriction periods, self-imposed and regulatory non-Work periods for environmental or other restrictions, all non-Work periods, or any other time restrictions prescribed by the DB Documents. The DB Team may constrain Work scheduling in these periods by using special calendars or other equally effective means. Clearly identify such starts or completions imposed on the Project Schedule and include a detailed description of each in the Project Schedule Narrative.
12. Unless otherwise approved in writing by GDOT and for the purposes of the Project Schedule and conversion of hours into days by the scheduling software, a standard working day consists of eight work hours per day from 8:00 AM to 5:00 PM with a 1-hour non-work lunch at 12:00 PM - 1:00 PM. Remain consistent with these start and finish times in each calendar (5-day work week, 6-day work week, 7-day work week, etc.).

2.5.2 Project Schedule Update Requirements

Use the approved Baseline Project Schedule as the basis for subsequent Project Schedule Updates. Update monthly the previously approved or accepted Project Schedule to accurately reflect the current status of the Project. Utilize Project Schedule Updates for the primary purposes of reporting current progress of the Work and the forecasted plan to complete the Project in relation to the approved Baseline Project Schedule. Project Schedule Updates may include minor changes and adjustments to the Project Schedule (such as splitting activity sets and adjusting relationships to account for out-of-sequence progress). Identify all changes and the justification for each in the accompanying Project Schedule Narrative. All changes will be reviewed for acceptance by GDOT as part of the Project Schedule Update review. Comply with the following Project Schedule Update requirements:

1. Set the data date to the day immediately following close of the update period, so that if the period closes on the 31st at 11:59 p.m., set the data date to the 1st of the next month using a beginning of day convention.
2. Contemporaneously and accurately memorialize actual progress (not calculated progress), including actual start, actual finish, and physical percent complete (manually input) for activities progressed as of the data date. Limit the input of actual dates to the active update period. Do not show actual dates beyond the data date. Do not revise previously statused start and finish dates without prior written acceptance from GDOT.
3. Recalculate the Project Schedule utilizing the retained logic method. Revise, adjust, and recalculate Project Schedules to represent the current plan to complete the Work with no out-of-sequence progress activities.
4. Forecast remaining dates for all in-progress activities utilizing accurate physical percent complete and updated remaining duration. Do not use expected finish dates. Reforecast early dates and recalculate late dates for all remaining activities.
5. Do not use default mechanisms which may be included in the scheduling software system to automatically update the Project Schedule.

6. For interruptions after an activity has begun, add a separate activity so that the original activity is split into two activities. Mark the original activity as completed. Use a FS relationship between the original activity and the new activity and retain all existing successor relationships.
7. Do not delete any activities after the Baseline Project Schedule is approved. If an activity's scope is eliminated, revise the description to include "- scope deleted," reduce the duration to zero days, remove logic, and contemporaneously actualize dates to the day immediately preceding the data date.
8. Maintain the unique activity identification number, name, and scope of each activity. Activity identification numbers can only be used once. Do not modify or reassign activity identification numbers. Do not revise activity descriptions to represent different scope than originally intended.
9. If additional activities are incorporated to supplement or replace the scope of a single activity, the existing activity must maintain its activity identification number and be converted to a level of effort summary activity that spans the newly added detailed activities.
10. Contemporaneously incorporate changes to the Work upon authorization of a Supplemental Agreement by GDOT. Include the Supplemental Agreement number in the activity description or as approved by GDOT and describe the new activity scope in the Project Schedule Narrative for the reporting period in which the Supplemental Agreement was executed. Depending on the nature of such modifications, a Revised Baseline Project Schedule submittal may be required at the sole discretion of GDOT.
11. Depending on the nature of proposed changes and at the sole discretion of GDOT, a Project Schedule Update may be returned to the DB Team to be resubmitted for review and approval as a Revised Baseline Project Schedule.
12. Submit the final Project Schedule Update (aka As-Built Schedule) at Final Acceptance or as directed by GDOT. Show actual start and actual finish dates for all activities, reflective of those dates shown in the DB Team's QA/QC documentation.

2.5.3 Revised Baseline Project Schedule Requirements

Major changes to the Project Schedule must be submitted for GDOT review and approval as part of a Revised Baseline Project Schedule submittal. Comply with all applicable requirements specified for a Baseline Project Schedule and a Project Schedule Update. Once approved by GDOT, use the Revised Baseline Project Schedule as the basis for subsequent Project Schedule Updates.

From time to time, GDOT may direct or the DB Team may request submittal of a Revised Baseline Project Schedule, subject to GDOT approval. GDOT direction or approval of the submittal of a Revised Baseline Project Schedule does not constitute a Relief Event or Compensation Event. GDOT may direct the DB Team to develop and submit a Revised Baseline Project Schedule when any of the following occur:

1. Project scope has changed substantially due to Supplemental Agreement(s) or accepted Relief Events by GDOT, whether individual or in aggregate.

2. Within 30 days of completing Final Design or once 30% completion of the Construction Work is achieved, whichever occurs sooner.
3. The overall approach to Work, sequencing, and timing are fundamentally changed. This includes revisions to the Construction Phasing and Staging Plan, wholesale resequencing of the Work, and substantial changes to the DB Team's means, methods, crew planning and staffing, field conditions, resource constraints, production rates, activity sets, original durations, calendar assignments, calendar work/non-work periods (work days or work hours/day), or constraints.
4. The Project Schedule forecasts a Completion Date that is more than 30 days later than the Completion Deadline.
5. If GDOT, in its sole discretion, determines that the current plan, as communicated by the Project Schedule, is insufficient or unreasonable, or that the DB Team's execution of the current plan is deemed to be insufficient and unlikely to achieve the successful completion of the Project within the Completion Deadlines.

2.5.4 Time Impact Analysis (TIA) Requirements

When asserting that a Relief Event has occurred, provide supporting evidence including a Time Impact Analysis (TIA). Use a copy of the then-current and latest accepted Project Schedule Update at the time the asserted event occurred and submit a fragmentary network ("fragnet") with supporting reports depicting the time impact basis of the request with the affected Project areas highlighted in the impacted Project Schedule. The submittal contents and process to submit, review, and approve a TIA request shall meet those specified for a Revised Baseline Project Schedule. Upon issuance of a Supplemental Agreement, or as otherwise directed in writing by GDOT, the impacted Project Schedule will be considered a Revised Baseline Project Schedule and will be used as the basis for subsequent Project Schedule Updates.

2.5.5 Project Schedule Narrative Requirements

With each Project Schedule submittal, include a separate Project Schedule Narrative meeting the requirements specified throughout Section 2.5 (Project Schedule Requirements) and Section 2.6 (Schedule of Values) and as further detailed below. Update and correlate the Project Schedule Narrative with each Project Schedule submittal.

For Baseline Project Schedule and Revised Baseline Project Schedule submittals, include the following, separated into sections:

1. An explanation of the overall plan to complete the Project, including where the Work will begin and how the Work and crews will progress through the Project. Identify all resource constraints including list of crews/crew types and equipment.
2. If Project Schedule recovery efforts are required as part of a Revised Baseline Project Schedule or at the sole discretion of GDOT, the DB Team shall identify the composition of, and production rate for, each crew type.
3. An explanation of the use and application of the workdays per week, number of shifts per day, number of hours per shift, holidays observed and how the Project Schedule accommodates anticipated weather days for each month. Submit a list of the calendars used and a definition of their type.

4. A description of the Work to be completed each season (for multi-year projects).
5. A description of the critical path(s) and near-critical path(s).
6. An explanation of the use of any proposed constraints, including the reason and purpose for each constraint.
7. Clearly identify any non-work periods, starts or completions imposed on the Project Schedule.
8. Identify any lag proposed and provide an explanation for the purpose of the lag.
9. A statement describing the status of any required permits.
10. Reference the Construction Phasing and Staging Plan with which the Project Schedule submittal aligns. Clearly describe any discrepancies or deviations between the Project Schedule and the Construction Phasing and Staging Plan and state the reasons and justification for each (if none; so state).
11. Include a detailed description of how the Project Schedule incorporates Work authorized by Supplemental Agreement, accepted Relief Events, or asserted Relief Events provided as part of a TIA. A discussion of delays in the Project Schedule Narrative does not constitute notice in accordance with Articles 13 and 14 of the DBA.

For Project Schedule Update submittals, include the following, separated into sections:

1. A description of the work performed since the last approved or accepted Project Schedule. If the Work performed does not match the Work scheduled to be performed, include a detailed description of why there is a discrepancy between the activities that should have been completed or progressed as indicated in the latest approved or accepted Project Schedule submittal.
2. A description of the status of the forecasted Completion Dates relative to each required Completion Deadline. Address any changes since the latest approved or accepted Project Schedule submittal and provide an explanation if any forecasted Completion Dates are projected to occur after the required Completion Deadlines.
3. A description of any problems encountered or anticipated since the latest approved or accepted Project Schedule submittal, inclusive of any unusual labor, shift, equipment or material conditions or restrictions encountered.
4. A description stating the dates which the DB Team could not work on activities identified on the critical path due to weather. If there were no weather delays experienced during the previous month the Project Schedule Narrative should state as such. Any such statements regarding weather delays does not constitute notice in accordance with Articles 13 and 14 of the DBA.
5. A detailed description of all proposed changes to the latest approved or accepted Project Schedule with justification for changes to any of the following: critical path, activity sets (added, deleted, or modified), original durations, activity relationships (logic), calendar assignments, calendar work/non-work periods (work days or work hours/day), constraints, WBS, activity coding, software settings, or Work authorized by Supplemental Agreement. Identify any changes to the work crews (number and size of each crew), shifts, hours worked, days worked, or major equipment changes.
6. A description of the critical path(s) and near-critical path(s).
7. A statement describing the status of any required permits.

8. A description of any risks or issues that may potentially impact the Project Schedule. Identification does not constitute nor satisfy the notice requirements of Relief Events under the DBA.
9. A statement that identifies any delays. The statement should include identification of the delayed activity, the type of delay, the cause of the delay, the effect of the delay on other activities and Completion Dates and identification of actions required to mitigate the delay. A discussion of delays in the Project Schedule Narrative does not constitute notice in accordance with Articles 13 and 14 of the DBA.

2.5.6 Project Schedule Submittal Requirements

Project Schedule submittals shall be provided and reviewed in accordance with timing requirements and durations specified in Table 3-1. Include the following with all Project Schedule submittals:

1. Electronic Primavera P6 file format (XER or equivalent P6 Export file type subject to prior approval by GDOT) of the current Project Schedule submittal. Do not submit multiple P6 Projects in a singular XER file.
2. A full schedule plot (PDF format) in a layout acceptable to GDOT.
3. A critical path schedule plot (PDF format) in a layout acceptable to GDOT.
4. A Project Schedule Narrative (PDF or MS Word file format) meeting the requirements of this Section 2.5.

GDOT shall review Baseline Project Schedule submittals and Revised Baseline Project Schedule submittals and return them as approved, approved with comments, or returned to be revised and resubmitted. Project Schedule Updates will be accepted, accepted with comments, or returned to be revised and resubmitted.

GDOT's approval or acceptance is for conformance to the requirements of the DB Documents and Good Industry Practice and represents that the submittal appears to meet the requirements of the DB Documents and appears to provide a valid Work plan for the Project, but in no way constitutes GDOT's approval or acceptance of the sufficiency of DB Team's planning, sequencing, means and methods and does not relieve the DB Team of sole responsibility for meeting DB Document requirements and Completion Deadlines.

Approval or acceptance does not expressly or by implication warrant, acknowledge, or admit the reasonableness of the logic, durations, resourcing, or any other element. If the DB Team fails to define any element of Work, activity, or logic and GDOT's review does not detect this omission or error, the DB Team remains responsible for correcting the error or omission without qualification. GDOT approval does not waive any DB Document requirement unless such approval includes specific, written statement of waiver of a requirement by GDOT subsequent to a written request for such waiver by the DB Team.

If the DB Team fails to submit a Project Schedule or if GDOT deems that any Project Schedule fails to meet the requirements of this Section 2.5 or the DB Documents, GDOT may withhold a portion of a Payment Request until the Project Schedule containing the required information is submitted and approved or accepted by GDOT, as applicable. Unapproved or unaccepted

Project Schedules and associated data shall not be considered relevant or applicable for any purposes during or after completion of the Project and shall not be binding on GDOT.

2.5.7 Project Schedule Software Requirements

Provide Project Schedules in electronic Primavera P6 file format (XER or equivalent P6 Export file type subject to prior approval by GDOT) compatible with software version utilized by GDOT.

Coordinate with GDOT to ensure all Project-related Primavera P6 data is properly imported with each Project Schedule submittal. This includes which import configuration options will be utilized. Unless otherwise agreed to in writing by GDOT, the following data types will not be imported or considered for purposes of review, approval or acceptance by GDOT: Resource Codes, Resource Code Values, Shift Names, Work Products and Documents, Relationships to External Projects, Project Funding Assignments, Issues, Project Code Assignments, Thresholds, Activity Step Templates/Activity Steps, Timesheets, Risks, High Level Planning Assignments and Project Budget data (Budget Log, Spending Plans, Funding Sources, and Current Budget), User Defined Fields (UDF's), Notebook Topics/Notebook Entries, Activity Discussion and Feedback tabs. Comply with the following software settings and defaults.

2.5.7.1 Software Admin Settings

Apply the following Primavera P6 software Admin Settings:

1. Use "Engineering and Construction" as the Industry to use for terminology and default calculation settings in the P6 Professional module.
2. Use "USD – Dollar" as Currency Type.
3. Define Time Periods as 8.0 Hours/Day. Check "Use assigned calendar to specify the number of work hours for each time period."
4. Use "Activity % Complete" as the Earned Value Technique for computing performance percent complete.
5. Use "ETC = Remaining Cost for activity" as the Technique for computing estimate to complete (ETC).
6. Use "At Completion values with Current Dates" or "Planned values with Current Dates" when calculating earned value. Do not use "Planned Values with Planned Dates" option.

2.5.7.2 Project Settings and Defaults

Apply the following Project settings and defaults:

1. Clearly identify each Project Schedule submittal with a unique Project ID and Project Name prior to submission (prior to starting the export process).
2. Set the Project status to "Active."
3. Leave blank the Project-level "Must Finish By" Date.
4. Use "." as the character for separating code fields for the WBS tree.
5. Use "July" as the fiscal year begins on the 1st day of setting.
6. Use "Project baseline" as the baseline for earned value calculations.
7. Use "Longest Path" to define critical activities.
8. Set Default Price/Unit for activities without resource or role price/units to "$0.00/h."
9. Uncheck "Activity percent complete based on activity steps."

10. Check “Link Budget and At Completion for not started activities.”
11. Select “Reset Remaining Duration and Units to Original.”
12. Set the default calendar to the most common Project-specific production calendar. Calendar assignments may be changed at the activity level, as applicable.

2.5.7.3 Activity Settings and Defaults

Apply and ensure all Project Schedule activities conform to the following:

1. Use “Fixed Duration and Units” as Duration Type for all Task Dependent and Level of Effort activities; use “Fixed Duration and Units/Time” for Milestones.
2. Use “Physical” as Percent Complete Type for all activities.
3. Use “Task Dependent” as Activity Type for all activities except for applicable Milestones and Level of Effort activities. Do not use Resource Dependent or WBS Summary Activity Types.

2.5.7.4 WBS Default Settings

Apply the following WBS Default Settings:

1. Set the status for all WBS levels with activities assigned to “Active.”
2. Select “Activity percent complete” as the technique for computing performance percent complete. Uncheck “Use resource curves / future period buckets.”
3. Select “ETC = remaining cost for activity” as the technique for computing Estimate to Complete (ETC).

2.5.7.5 Software Schedule Options

Under Primavera P6 Tools, Schedule, apply the following Options:

1. Check “Ignore relationships to and from other projects.”
2. Uncheck “Make open-ended activities critical.”
3. Uncheck “Use Expected Finish Dates.”
4. Uncheck “Schedule automatically when a change affects dates.”
5. Uncheck “Level resources during scheduling.”
6. Uncheck “Recalculate assignment costs after scheduling.”
7. When scheduling progressed activities use “Retained Logic.”
8. Calculate start-to-start lag from “Early Start.”
9. Define critical activities as “Longest Path.”
10. Calculate float based on finish date of “Each project.”
11. Compute Total Float as “Finish Float = Late Finish - Early Finish.”
12. Calendar for scheduling Relationship Lag use “Predecessor Activity Calendar” or specify with the Baseline Project Schedule if lags are to be calculated on predecessor, successor, or 24-hour calendar, and do not change in future Project Schedule submittals.

2.5.8 Project Schedule Workplan Requirements

No requirements.

2.5.9 Two-Week Detail Schedule Requirements

Two-Week Detail Schedule submittals shall be provided and reviewed in accordance with timing requirements and durations specified in Table 3-1. Ensure Two-Week Detail Schedules:

1. Include a rolling period of at least two weeks ahead for planned activities and one week back (recording actual dates and durations for Work performed).
2. Are based on the current Project Schedule Update and provide a more detailed breakdown of the activities for the purpose of coordination of the Work, oversight planning, verification of Work completed, and materials inspection and testing.
3. Align accurately with and are derived from the current Project Schedule with any deviations clearly noted and explained.
4. Reference the applicable Project Schedule activity identification numbers and define subsequent specific daily operations for all Work activities scheduled to be performed during the look-ahead period.

2.6 Payment Requests and Payment

2.6.1 Schedule of Values (SOV)

Schedule of Values (SOV) means a detailed price breakdown structure of all Elements of the Work listed as discrete Payment Activities organized in a logical and hierarchal manner. The SOV shall be used as the mechanism for determining progress payments on a percent-complete basis with associated dollar amounts identified for each Payment Activity to justify monthly Payment Requests. Unless otherwise described in this Section 2.6, no payments will be made until the SOV is approved. Supplemental Agreements that include changes to the Contract Sum will be incorporated into the SOV.

Prepare the SOV and apportion the Contract Sum across Payment Activities such that the sum of the prices of all Payment Activities equals the Contract Sum. Payment Activities shall meet requirements described in Section 2.6.1.1.

Include for each Payment Activity shown on the SOV the following populated fields:

1. Unique and consistently labeled Payment Activity identification number
2. Unique and consistently labeled Payment Activity description
3. Scheduled Value (aka budgeted amount on price basis; include quantity, unit of measure, and unit price if applicable)
4. Previous amount paid to date (on price and percent-complete basis of Scheduled Value)
5. Amount requested for current period (on price and percent-complete basis of Scheduled Value)
6. Cumulative Total Completed to Date (on price and percent-complete basis of Scheduled Value)
7. Balance to Finish (aka Remaining amount on price and percent-complete basis of Scheduled Value)

SOV refers to any of the following: SOV or SOV Updates, as further defined in this Section 2.6 and as appropriate for the context in which they are used.

2.6.1.1 Payment Activities

Payment Activities are Elements of the Work for which payment on account of the Contract Sum shall be due, subject to the terms of this Agreement. Include subtotals for logical groupings of Payment Activities. Unless otherwise approved in writing by GDOT, structure the SOV to roll-up to those Payment Activities and associated Scheduled Values included in the Proposal SOV (Volume 1, Exhibit 5).

Further subdivide the Work into sufficiently detailed Payment Activities to the satisfaction of GDOT. Payment Activities shown on the SOV must be reasonably associated with and supported by the activities represented by the Project Schedule. The DB Team may elect to price-load the Project Schedule with the SOV upon prior GDOT approval. Upon GDOT request, provide further detail to accurately represent the value of the Work for the Payment Activities comprising the SOV prior to submittal of the first Payment Request or when directed by GDOT. Payment Activities shown on the SOV shall meet the following criteria:

1. PM—Update the dollar amount for the Payment Activity.
2. Payment Activities cannot be front-loaded.
3. No Payment Activity shall be greater than $ 200,000 without prior GDOT approval.
4. Once approved, Payment Activities cannot be modified in identification number, description or Scheduled Value without prior GDOT approval. GDOT intends for such modifications to occur rarely.
5. The Scheduled Value for each Payment Activity shall accurately represent the value of the Element of the Work identified.
6. Include separate Payment Activities for each of the following:
7. Mobilization, which shall not exceed **2.5%** of the sum of the Construction and Design Complete amount identified in the SOV.
8. Record Drawings (As-Built) Submittal, which shall be no less than **0.1%** of the sum of the Construction and Design Complete amount identified in the SOV.
9. Completion of punch list items, which shall be no less than **0.5%** of the sum of the Construction and Design Complete amount identified in the SOV.
10. Final Close-out, which shall be no less than **0.2%** of the sum of the Construction and Design Complete amount identified in the SOV.
11. Demobilization, which shall be no less than **0.2%** of sum of the Construction and Design Complete amount identified in the SOV.

2.6.1.2 SOV Submittal Requirements

The Proposal SOV (Volume 1, Exhibit 5) will be used to pay for Work performed during the first 90 days following NTP 1. Payment Requests based on the Proposal SOV are subject to Sections 2.6.1 through 2.6.10. After 90 days, no further payment will be made until the SOV is approved by GDOT and is progressed for the period in which the DB Team intends to be paid. The SOV shall be submitted by the DB Team and reviewed by GDOT for approval in accordance with timing requirements and durations specified in Table 3-1.

An SOV Update shall be submitted with and shall justify the DB Team's monthly Payment Requests. Provide SOV Updates in accordance with Section 2.6.4 (Payment Request Approval

and Processing) and Section 2.6.5 (Documents Required to be Provided with the Payment Request). The DB Team and GDOT will agree upon the progress percent complete and the associated dollar amount for Work in place related to each Payment Activity shown on the SOV. Progress shown on Payment Activities must be reasonably associated with and supported by the activity status information as represented by the corresponding Project Schedule Update submittal.

2.6.2 Draft Payment Request

Submit a draft Payment Request to GDOT containing the amount asserted to be payable for each Payment Activity shown on the SOV and other amounts due under approved Supplemental Agreements. The draft Payment Request, lien release, and certification shall be submitted on forms provided or approved by GDOT, which approval shall be secured prior to the Payment Request Review Meeting.

Upon receipt of a draft Payment Request, GDOT will review the submitted Payment Request and provide comments to the DB Team listing any discrepancies and amounts intended to be withheld or deducted.

2.6.3 Payment Request Review Meeting

Schedule and hold a Payment Request review and progress status meeting with GDOT, if requested by GDOT, after submitting a draft Payment Request and prior to submitting a final Payment Request each month. The Payment Request review meeting is to obtain GDOT's comments or the changes necessary to the draft Payment Request to allow a final Payment Request to be submitted by the DB Team. The meeting shall address and finalize the status of the following:

1. Excepting allowable Payment Requests based on the Proposal SOV, for each Payment Activity with progress provide supporting Project Schedule Update activity information including actual start dates, actual finish dates, and percent completes.
2. Incorporation of and summary list of all Supplemental Agreements.
3. Each Payment Activity which includes Nonconforming Work.
4. Any other payment requested, such as for mobilization, demobilization, insurance and bonding, or unincorporated materials.

2.6.4 Payment Request Approval and Processing

Submit a final Payment Request to GDOT by the fifth day of each month, containing the amount asserted to be payable for each Payment Activity and amounts due under approved Supplemental Agreements. The final Payment Request will address all comments provided by GDOT to the DB Team at the Payment Request review meeting.

Payment Request shall be submitted electronically using forms provided by GDOT and shall include supporting documentation for the amount claimed payable when requested by GDOT.

GDOT will review the Payment Request within five Business Days of receipt from the DB Team. If GDOT disagrees with the amounts requested or unresolved items remain, submit a revised Payment Request to address any outstanding issues identified by GDOT. If the DB Team

includes items for payment that remain unresolved, GDOT will either: i) notify the DB Team that unresolved items in the Payment Request remain, and request a resubmittal of a revised Payment Request; or ii) deduct those amounts GDOT asserts are not eligible for payment, and process the Payment Request. In such case, GDOT shall notify the DB Team of any such deductions.

2.6.5 Documents Required to be Provided with the Payment Request

The following documents shall be submitted with each final Payment Request application. No Payment Request will be processed without such documents properly completed, signed, and dated:

1. SOV Update meeting the requirements of this Section 2.6 progressed through the month for which payment is being requested.
2. Excepting allowable Payment Requests based on the Proposal SOV, a Project Schedule Update submittal required by Section 2.5 (Project Schedule Requirements) progressed through the month for which payment is being requested.
3. All required insurance certificates.
4. Any other document or submittal required by the DB Documents to be provided.

2.6.6 Limitations on Progress Payments

GDOT will not pay for Work unless the following conditions are met with respect to such Work:

1. Accepted Released for Construction Documents and any supporting design documentation are on Site for the Work being performed and for which payment is being requested.
2. Nonconforming Work Items are corrected and/or resolved to the satisfaction of GDOT for Payment Activities that are asserted as complete.
3. Payment will be made based upon the approved Scheduled Value multiplied by the total percentage of the Work completed for that reporting period. Payment Activities shall not be fully paid (100% of the Scheduled Value) until that portion of the Work is completed and all applicable required documentation is received and accepted by GDOT.
4. The amount payable to the DB Team for insurance and bond premiums will be their actual cost, which will be paid (reimbursed) upon proof of payment by the DB Team. Where an activity requires submittal of a bond, the activity is complete when the bond has been provided in the amount and under the terms required in the Agreement.
5. For Mobilization Payment Activity:
    a. The first Payment Request after NTP 3 may include up to 50% of the amount for Mobilization set forth in the approved SOV.
    b. After 5% of the Construction total set forth in the approved SOV is incurred, the next Payment Request may include up to 100% of the amount of Mobilization set forth in the approved SOV, minus any previous payments.

2.6.7 Price Reductions for Nonconforming Work

On any Payment Request, GDOT may suspend or deduct amounts otherwise due to the DB Team for that period's apportionment for any continuing activity for any of the items identified in Volume 1, Exhibit 18.

If the DB Team fails to completely prosecute Work or correct Nonconforming Work or incorrectly progressed Work for which that Payment Activity was paid in full, GDOT may deduct amounts from the next successive month for that Work until the Nonconforming Work is resolved to the satisfaction of GDOT.

Nonconforming Work, if accepted by GDOT, will result in reductions of the Contract Sum as specified herein. The DB Team shall be provided the opportunity to either accept a reduction offered by GDOT or to remove and replace the Nonconforming Work at no additional cost to GDOT.

Where provided for in the GDOT Standard Specifications, unit prices for deductions may be applied by GDOT, including pay factors, daily deductions, and rejection values. Amounts for reductions of Nonconforming Work allowed to remain in place by GDOT that are not covered by GDOT Standard Specifications shall be determined by GDOT.

Girder defects will be assessed for price reductions based on long-term durability and maintenance concerns.

2.6.8 Other Deductions

GDOT may deduct from any amounts otherwise owing to the DB Team, including for each monthly progress payment and the final payment, the following:

1. Any anticipated or accrued losses, liability, liquidated damages, fees, or other damages for which the DB Team is responsible.
2. The estimated or actual cost, as determined by GDOT, of remedying any Nonconforming Work or otherwise remedying any breach of contract by the DB Team.
3. The disputed amount of any outstanding claim relating to the Work.
4. The estimated amount, as determined by GDOT, or the amount identified in the SOV, whichever is greater, for Work that the DB Team is obligated to perform that the DB Team has failed to perform.
5. Any other sums which GDOT is entitled to withhold, deduct, or recover from the DB Team under the terms of the Contract.
6. With regard to final payment, in addition to the above, the amount GDOT deems advisable to retain to cover any existing or threatened Disputes, Claims, Liens, and stop notices relating to the Project, and the cost of any uncompleted Work (including uncompleted Warranty Work).

GDOT's failure to deduct from a progress payment or final payment any amount that GDOT is entitled to recover from the DB Team under the Contract shall not constitute a waiver of GDOT's right to such amounts.

2.6.9 Processing and Payment

Once GDOT reviews and approves a final or revised Payment Request acceptable to GDOT and in accordance with Sections 2.6.4 (Payment Request Approval and Processing) and 2.6.5 (Documents Required to be Provided with the Payment Request), GDOT will sign and date and return a copy of the Payment Request cover sheet with any corrections noted and proceed with processing the Payment Request.

2.6.10 Payment to Contractors and Subcontractors

Upon receipt of payment, promptly pay all Contractors out of the amount paid to the DB Team on account of the respective Work performed by such Contractors as and to the extent that such Contractors are entitled to same under the respective Contracts and applicable law. Require Contractors by appropriate agreement with the Subcontractors to require all such Subcontractors to make payments to all downstream sub-subcontractors and suppliers in a similar manner. GDOT shall have no obligation to pay or to see to the payment of money to the Contractors or Subcontractors, except as may otherwise be required by Law, provided however, that GDOT reserves the right to make payments to the DB Team and jointly payable to any such parties where the DB Team has failed to remit payments properly due and as required.

In no event shall the DB Team include in any Payment Request amount any request for payment on account of Work performed by any Contractor or Subcontractor that shall not be remitted to such parties in accordance with the terms of the DB Documents and applicable Law.

In no event shall either the DB Team or any Contractor or Subcontractor withhold or impose retainage on any Subcontractor or Supplier, or any downstream sub-subcontractors or suppliers of any tier. With each Payment Request, provide GDOT with details regarding the withholding or deduction of any payments to Contractors or Subcontractors, including specificity as to amounts and the basis for such withholding or deductions and if any such Contractors or Subcontractors are included within the DB Team's DBE Commitments List.

2.6.11 Application for Final Payment

Final payment will be made in accordance with Section 2.6.12 (Final Payment).

On or about the date of delivery of GDOT's issuance of the certificate of Final Acceptance, prepare and submit an application for final payment ("Final Payment") to GDOT showing the proposed total amount due the DB Team. In addition to meeting all other requirements for invoices hereunder, the application for Final Payment shall include (i) the executed release and affidavit described below; (ii) a list of any asserted, outstanding, or pending Relief Events or Compensation Events and all existing or asserted claims, liens, and stop notices by Subcontractors, laborers, Utility Owners, or other third parties relating to the Project, including any notices filed or to be filed with the Affidavit of Final Completion, stating the amount at issue associated with each such notice; (iii) the written consent by the Surety to such payment; and (iv) such other documentation as GDOT may reasonably require.

GDOT will review the DB Team's proposed application for Final Payment, and changes or corrections will be forwarded to the DB Team for correction. If no changes or corrections are required, GDOT will approve the Application for Final Payment.

2.6.12 Final Payment

As a condition to its obligation to make payment to the DB Team based on the application for Final Payment, GDOT shall have received an executed release from the DB Team, releasing and waiving any claims against the Indemnified Parties, excluding only those matters identified in any asserted, outstanding, or pending Relief Event or Compensation Event Notices listed as outstanding in the application for Final Payment, and otherwise satisfactory in form and content to GDOT.

The executed release shall be accompanied by an affidavit from the DB Team certifying the following:

1. All Work has been performed in strict accordance with the requirements of the DB Documents.
2. The DB Team has resolved any claims made by Subcontractors, Suppliers, Utility Owners, laborers, and others against the DB Team, GDOT, or the Project, except for those claims identified in the Application for Final Payment or those claims for which the Subcontractor has executed a release against GDOT, the Project, and the Payment Bond.
3. The DB Team has followed GDOT's procedures for Final Acceptance and has provided complete lien releases from all Subcontractors and Suppliers, except for those with claims listed above, in a form and with language provided by GDOT.
4. The DB Team has no reason to believe that any Person has a valid claim against the DB Team, GDOT, or the Project that has not been communicated in writing by the DB Team to GDOT as of the date of the certificate.

All prior partial estimates and payments shall be subject to correction in the Final Payment.

The executed release and the affidavit shall survive Final Payment. The payment amount will be reduced by any amounts deductible under these DB Documents.

The DB Team's acceptance of Final Payment shall constitute a waiver of affirmative claims by the DB Team, except such claims previously made in writing and identified in writing as outstanding and unsettled at the time of the application for Final Payment.

2.6.13 No Waiver

No payments shall be construed as an acceptance of any defective work or improper materials nor shall any such payments be conclusive evidence of the performance of this Agreement.

2.7 Project Closeout

2.7.1 Record Drawings and Project Closeout

The EOR will perform a Site visit at no more than 30 days following NTP 3, and subsequent Site visits no less than every 90 days thereafter until Substantial Completion is achieved. Additionally, an EOR Site visit will take place at the midpoint of each and every individual bridge construction. The purpose of the Site visits is for the EOR to visually inspect the progression of the Work for compliance to the RFC Documents. The EOR will prepare a Site observation

compliance report to document elements of the Work that are compliant and non-compliant with the RFC Documents. If elements of the Work are not compliant with the RFC Documents, the EOR will coordinate with the DB Team to determine corrective action and describe the corrective action in the Site observation compliance report. The Site observation compliance report will be submitted within seven days of the Site visit and stamped by the EOR.

2.7.1.1 Engineer of Record Final Inspection

The EOR and CQAM will participate in any final inspection and prepare a final Site observation compliance report to document elements of the Work that are compliant and non-compliant with the RFC Documents. If elements of the Work are not compliant with the RFC Documents, the EOR will coordinate with the DB Team to determine corrective action and describe the corrective action in the final Site observation compliance report. This process will be repeated until no non-compliance items remain. The final Site observation compliance report(s) will be submitted within seven days of the Site visit, and the last one submitted, once all non-compliance items are corrected and meet the DB Requirements. Final Acceptance cannot be achieved until this process is complete and the final Site observation compliance report, stamped by the EOR and certified by the CQAM as accurate and complete, is received by GDOT.

2.7.1.2 Record Drawings

Submit to GDOT a complete set of Final Design documents and Record Drawings for all the Construction Phases of the Project within 30 days of Substantial Completion and upon completion of the Construction Work, organized by Construction Phase, as a condition to Final Acceptance. Ensure the Record Drawings and documentation are an organized, complete record of Work performed and supporting calculations and details that accurately represent what the DB Team constructed. Ensure that the Record Drawings reflect the actual condition of the constructed Work.

Submit prior to any portion of the Project being opened to traffic Record Drawings for that portion of the Project in hardcopy and electronic format with a signed statement by the EOR and CQAM that the Record Drawings reflect the actual condition of the constructed Work.

Provide, in accordance with Section 3, in a portable flash drive containing:

1. All electronic design files, electronic calculations, etc.
2. Full-size 24-by-36-inch .pdf of each plan sheet and the entire plan set

Provide the following in hardcopy format:

1. Full-size 24-by-36-inch set of bound prints, or smaller size as may be agreed to by GDOT

Provide these Record Drawings not as field sketches or redlines, but as CAD generated drawings that compile all field changes, redlines, plan revisions, and all Nonconforming Work into a single strike-through format set of plans. Where appropriate, new drawings may be inserted in to the plans to depict portions of the as-built Work.

Ensure all files conform to the criteria for the design platform (InRoads, MicroStation or CAD) found in GDOT's Electronic Data Guidelines (EDG).

The DB Team is responsible for all production and delivery of materials needed for GDOT review.

Final Acceptance cannot be achieved until a complete set of Record Drawings is received and accepted by GDOT.

3 DESIGN AND SUBMITTALS

3.1 General

Provide Project Submittals in both electronic and hardcopy format.

3.2 Administrative Requirements

3.2.1 Software

Proprietary structural design software may be used in lieu of GDOT specific computer software products. All alternative software products are subject to prior GDOT approval, and upon such approval may be used to design the following structural elements:

1. Prestressed concrete beams
2. Steel girders (both curved and straight)
3. Concrete decks
4. Bridge substructure, including end bents and intermediate bents
5. Foundations, including pilings and drilled caissons
6. Bearings

Structural analysis software may be used to perform complex analysis or finite element modeling of bridges and bridge elements.

Spreadsheets or MathCad-type programs may be used to develop hand calculations for repetitive design elements.

Ensure all software, spreadsheets, and MathCad output is present in design documentation so that it can be verified to be compliant with design requirements by an independent checker. Provide the input, formulas (with code references shown), and output for hand calculations developed using software so that it can be verified. Ensure that proprietary software output is not a black box type output, and all code checks are visible to be verified by an independent checker. GDOT may require further verification of results of any design software using GDOT bridge design programs, hand calculations, or structural analysis software. Seek GDOT determination of any such reviews, and account for any additional GDOT review time in the Project Schedule, which additional time shall not constitute a Relief Event.

Use of any software does not relieve the designer of their responsibility to perform required QA/QC of designs performed using this software. Errors or deficiencies that exist in any proprietary or commercial software that produce errors in the design or construction will be the responsibility of the DB Team.

InRoads output and Microsoft Excel spreadsheets may be subject to verification of results using GDOT's bridge geometry program.

3.2.2 GDOT Standards and Manuals

Ensure that all Work complies with all applicable Manuals and Guidelines developed for and including AASHTO, FHWA, GDOT, and additional requirements stated in Attachment 3-1 (Manuals) and reasonably inferred therefrom.

Reference Section 1 (General) regarding applicability of GDOT standards and specifications and manuals.

Ensure that all requirements of the AASHTO Manual for Assessing Safety Hardware (MASH), 2nd Edition, 2016, are met. Ensure that its designs and installation meet the required MASH implementation dates during the life of the contract, except as superseded by the requirements in Section 13.3.5 (Bridge Railing and Barriers). Comply with Attachment 3-2 (Concrete Barrier Special Provision 621).

3.2.3 Detailed Estimate of Quantities

Provide a detailed estimate with the RFC Plans that identifies GDOT Pay Items, pay item descriptions, units, and estimated quantities for the Project. Provide quantities in the Final Bridge Plans in accordance with the GDOT Bridge and Structures Design Manual.

3.3 Design Requirements

3.3.1 Design Workshop

The EOR shall organize and facilitate the design review kick-off workshop with GDOT, no later than 30 days from NTP 1, to discuss the DB Team's approach to design the Project, any phasing, design packages, and related design Submittals. Ensure that the Designer's personnel, GDOT, and the Utility Adjustment Team (UAT) are in attendance. The purpose is to familiarize involved personnel with the design concepts, issues, status, and review procedures. Jointly develop the workshop agenda with GDOT and agree upon how it will be organized (such as by GDOT department and engineering discipline). During the design workshop, discuss with GDOT any application of Interim Design reviews to reach resolution for Project Elements that pose complex constraints or entail additional review effort. The workshop will also discuss the extent of GDOT and UAT reviews. The primary goal of the workshop is to make the design review process more effective and efficient for all parties. Agreements made regarding design review times are aspirational only and do not override the durations stipulated in the DB Documents.

3.3.2 Design Coordination Meetings

The DB Team's Engineer of Record (EOR) will schedule and facilitate design coordination meetings. Ensure that the DQAM, the DB Team's independent design reviewer(s), and any design professionals having significant input into the design under review are present. Notify and invite GDOT and the UAT to participate in all design reviews. Schedule design coordination review meetings no less frequently than monthly, or to the frequency determined by GDOT, until all Submittals have been accepted and Final Design is completed.

GDOT may also invite additional stakeholders to attend. GDOT's participation in design coordination meetings does not relieve the DB Team of its responsibility for the satisfactory completion of the Work in accordance with all requirements of the DB Documents.

The EOR or designated design leads shall provide the meeting agendas at least three Business Days in advance of the meetings. Include in each agenda a detailed summary status of all submittals provided to GDOT that are the subject of the meeting. In addition, prepare and distribute minutes from the review meetings within three Business Days of the meeting.

Maintain design quality records in an auditable format according to the QMP procedures. GDOT has the right to audit the quality records for compliance with the QMP and DB Document requirements. Turn over all quality records to GDOT upon completion of the Project.

GDOT will facilitate a field plan review of the Final Design. At a minimum, the DB Team's Engineer of Record (EOR) or design project manager and a representative of the DB Team's contractor will attend.

3.3.3 Changes Subsequent to Design Review

Re-check and re-certify the design as an additional design review if the design is amended subsequent to design review and acceptance by GDOT. Substantive changes to plans and specifications initiated by the DB Team, and already checked by the EOR and certified by the DQAM, are subject to the design review process as an entirely new design.

3.3.4 Other Agency Approvals

3.3.4.1 Federal Aviation Administration

No additional requirements.

3.3.5 Design Data Book

Document all design criteria and design decisions in a Project Design Data Book submitted for acceptance, and keep it with the Project files. Include in the Project Design Data Book complete and up-to-date design parameters and decisions (as applicable to the Project) as presented in Chapter 5 of the GDOT Plan Development Process (GDOT PDP) included in Attachment 3-1. Do not include in the Project Design Data Book proposed public involvement strategy, cost estimates, risk assessment, and schedule.

Submit the Project Design Data Book for GDOT review and acceptance no later than 21 days after NTP 1. GDOT may not review any Design Submittal(s) until the Project Design Data Book has been approved.

Update and include the relevant portions, or as requested by GDOT, of the Project Design Data Book with each design submittal, including Preliminary Plans, Final Design, RFC, and RFC revisions. Include the finalized and comprehensive Design Project Data Book with the Record Drawings submittal.

3.3.6 Design Submittals and Progress of Design Work

Documents received after 12:00 p.m. (noon) Eastern Standard or Daylight Savings Time (as applicable), including all notices, correspondence, communications (including e-mail and facsimile), or other Submittals received after 12:00 p.m. (noon), are deemed received on the first Business Day following delivery (for example, in order for a fax to be deemed received on the same day, at least the first page of the fax must have been received before 12:00 p.m.).

Deliver each required Submittal to GDOT in conformance of the review times provided in Volume 1, Article 6.3.2 and in Table 3-1 (Master Submittal List). The times provided in Table 3-1 are specifically for the review period required for GDOT to comment and GDOT to subsequently accept. Accuracy, completeness, and time spent to address GDOT comments and resubmit for re-review are the responsibility of the DB Team.

No fabrication, casting, or construction will occur until all related design review and shop drawing review comments are resolved and the corresponding drawings and specifications have been accepted by GDOT and stamped Released for Construction.

Ensure all design Submittals are complete along with all the supporting information necessary for review. The Submittal and supporting information must represent logical Work activities and must show impacts on subsequent Work on this Project. Any modification to the component construction due to subsequent design changes or as a result of design development is solely at the DB Team's risk, regardless of GDOT acceptance.

Provide Project Submittals included in Table 3-1. Table 3-1 may not be all-inclusive or exhaustive. It is the DB Team's responsibility to determine and submit all items required by the DB Documents. Deliver each required Submittal to GDOT in compliance with the review times provided. The times provided are specifically for the review period required for GDOT to comment and subsequently accept (if all requirements of the DB Documents are met) or approve, as applicable. Not all Submittals listed in Table 3-1 may be required for the Project, and some Submittals may be combined into a single Submittal, such as the Project Management Plans; coordinate with GDOT prior to combining any Submittals and receive GDOT approval prior to omitting any listed Submittals.

Abbreviations for Table

ASC	Point File for Survey Data
AR	As Required
DTM	Digital Terrain Model
FS	Full-size paper – meets GDOT Plan Presentation Guide
HC	Hardcopy – 8 ½ x 11 unless otherwise noted
HS	Half-size paper – meets GDOT Plan Presentation Guide
MP	Microsoft Project
MS	MicroStation File – Electronic
NA	Not Applicable

NTP	Notice to Proceed
P6	Primavera P6
PAS	Per Approved Schedule
PDF	Adobe PDF – One complete file and individual plan sheet files that meet GDOT Electronic Plans Process requirements

(Rest of page intentionally left blank)

Table 3-1: Master Submittal List

Section	Submittal Item	Format	Quantity	Delivery Date	Review Period* (Days)
2, 3	Design and Construction Quality Records	AR	1	Always auditable; Submit at project completion	NA
3	Project Design Data Book (and updates)	HC, PDF	3, 1	Within 21 days from NTP 1	7
3	Meeting minutes	PDF	1	Within 3 days of each meeting	7
2	Management Plans (updates)	PDF	1	As needed	14
2	Quality Management Plan (QMP) including Administrative portion and the DQMP	PDF	1	Within 30 days from NTP 1 prior to the start of design	14
2	Construction Quality Management Plan	PDF	1	See Section 2	14
2	Safety Plan	PDF	1	See Section 2	14
2	DB Team Non-Conformance Reports	PDF	1	As needed	NA
2,5,7	ROW Acquisition Plan	AR, PDF	1	Within 60 days from NTP 1	14
2,10	Demolition and Abandonment Plan	PDF	1	Within 90 days from NTP 1	14
2.5	Project Schedule Workplan	PDF	1	Within 30 days from NTP 1	14
2.5	Baseline Project Schedule	P6, PDF	1, 1	Within 60 days from NTP 1	30
2.5	Revised Baseline Project Schedule	P6, PDF	1, 1	Within 14 days of being directed or as required	30
2.5	Baseline and Revised Baseline Project Schedule resubmittals	P6, PDF	1, 1	Within 14 days of being directed	14
2.5	Project Schedule Update	P6, PDF	1, 1	5th of each Month or as otherwise agreed	14
2.5	Project Schedule Update resubmittals	P6, PDF	1, 1	Within 7 days of being directed	7
2.5	Two-Week Detail Schedule	PDF	1	Same day every week in which Construction Work occurs	7
2.6	Schedule of Values (SOV)	PDF	1	Within 60 days from NTP 1	14
2.6	SOV resubmittals	PDF	1	Within 14 days of being directed	7
19	Construction Maintenance Limits Plan including Joint Project Inspection submittal	FS, HS, PDF	1	Within 150 days from NTP 1	21
19	Maintenance Management Plan	PDF	2, 6, 1	Within 150 days from NTP 1	21

Section	Submittal Item	Format	Quantity	Delivery Date	Review Period* (Days)
2	Public Information Materials	AR, PDF	See Section 2.7	As needed	14
2	Public Information and Communication Report	PDF	18	Monthly	14
2	Construction Progress Photos and Video	AR, PDF	12	Monthly or as needed based on construction milestones or events	N/A
2.2.4	Construction Phasing and Staging Plan	PDF	1	Within 60 days from NTP 1 and within 14 days of being directed	30
4	Information to support GDOT - Led Governmental Approvals	PDF	1	As needed	Table 4-1
2,4	Comprehensive Environmental Protection Plan (CEPP)	PDF	1	Within 60 days from NTP 1	14
4	Environmental Protection Training Plan (EPTP)	PDF	1	Within 60 days from NTP 1	14
4	Hazardous Materials Management Plan (HMMP)	AR, PDF	1	As needed. Within 60 days from NTP 1	14
4	UST and Hazardous Waste Site Investigation Report	AR, PDF	1	Within 180 days from NTP 1 and 30 days Prior to NTP 3	30
4	Section 404, permit(s)	PDF	1	**	Table 4-2
4	Water Quality Certification (concurrently with the USACE Permit)	PDF	1	**	Table 4-1
4	Applications to Regulatory Agencies, Application revisions, supplements	AR, PDF	1	As needed	***
6	Supplemental verification of Overhead/Subsurface Utility Engineering (SUE) Investigations - QL-B	MS PDF	1, 1	NTP (1) + 45 Calendar days (Or as Determined by State Subsurface Utilities Engineer at the SUE Kick-Off meeting which is concurrent with the first utility coordination meeting)	NA

Section	Submittal Item	Format	Quantity	Delivery Date	Review Period* (Days)
6	SUE Utility Impact Analysis (UIA)	PDF	1	NTP 1 + 120 Calendar days (Or as Determined by State Subsurface Utilities Engineer at the SUE Kick-Off meeting which is concurrent with the first utility coordination meeting)	NA
6	Overhead/Subsurface Utility Engineering (SUE) Investigations - QL-A as required	MS, PDF	Plans: 2 for each Utility Owner +3 for Dept. and MS files	UIA + 45 Calendar days	NA
6	Overhead/Subsurface Utilities Engineering (SUE) Information to Utilities for Review (URPN Letter 1a - SUE Submit to Utility Companies Revise)	FS, HS, PDF, MS	Plans: 2 for each Utility Owner +3 for Dept. and MS files	NTP 1 + 5 Calendar days (Or as Determined by District Utilities Manager at SUE Kick-Off meeting)	5 days for Dept. + 30 days for each Utility Owner
6	Relocated Utility Plans (URPN Letter 2 - 2nd Submission Letter (Existing and Proposed))	FS, HS, PDF, MS	3, 3, 1,1	Concurrently with Accepted SUE Verification by Utility Owner	5 days for Dept. + 90 days for each Utility Owner
6	Utility Retention Request	PDF	1	As needed	14

Section	Submittal Item	Format	Quantity	Delivery Date	Review Period* (Days)
6	Preliminary Utility Status Report	HC, PDF	Agreements: 3 hardcopy, 1 electronic pdf Plans: 2 for each Utility Owner + 3 for Dept. and MS files	NTP 1 + 180 days Concurrently with Accepted Relocated Utility Plans and (URPN Letter 6 - Notice to Proceed with Permit)	10-days + 5 days
6	Utility Plans/Agreements (Utility NTP Letter)	Plans/ Agreements HS, PDF, MS	1, 3, 1, 1	See Section 6	Agreements: 30 days for Dept. + 60 days for each Utility Owner Plans: 30 days
6	Utility Claims of Real Property Interests	PDF	1	See Section 6	14
6	Utility Adjustment Field Modification Procedure	PDF	1	Prior to submittal of any Utility Work Plan	14
6	Utility Emergency Response Plan	PDF	1	30 days Prior to NTP 3	14
6	Intermediate Utility As-Built Plans	PDF	1	Within 30 days of completed utility adjustment, installation, relocation or abandonment	14

Section	Submittal Item	Format	Quantity	Delivery Date	Review Period* (Days)
6	Final Utility Record Drawings (As-Built Plans)	FS, HS, PDF, MS	2,3,1,1	Concurrently w/Accepted Construction Record Drawings (As-Built Plans)	30 days for GDOT plus 30 days for Utility Owners
6	All Utility Meeting Minutes	PDF	1	Within 7 days of Utility Meeting	3
8	Soil Survey Reports	PDF	1	See Section 8	30
8	WFI (Wall Foundation Investigation)	PDF	1	**	30
8	BFI (Bridge Foundation Investigation)	PDF	1	**	30
8	Blasting Plan	AR, PDF	1	As needed	30
9	Property Owner Notification Letters	PDF	1	As needed	7
9	Survey Control Package	ASC, PDF	1	Prior to Project Completion	N/A
9	Bound Field Notes	PDF	1	Prior to Project Completion or upon GDOT request	N/A
9	Topographic Mapping	DTM, PDF	1, 1	Prior to Project Completion	N/A
11	Vibration Control Plan	PDF	1	Within 120 days from NTP 1 and 30 days prior to NTP 3	14
12	Drainage Design Report (Phased)	PDF	1	As needed	30
12	Stormwater System Report(s)	PDF	1	As needed	14
12	Annual Outfall Inspection Report	PDF	1	Within 30 days of Annual DB Team Inspection	30
12	Post-Construction Stormwater Report	PDF	1	See Section 12	30
13	Preliminary Bridge Layouts (submit together w/ the Hydraulic & Hydrology Report)	FS, HS, PDF	2, 6, 1	**	30
13	Preliminary Wall Layouts	FS, HS, PDF	2, 6, 1	**	30
13	Bridge Demolition Plan	AR, PDF	AR	Within 150 days from NTP 1 and 30 days Prior to NTP 3	30

Section	Submittal Item	Format	Quantity	Delivery Date	Review Period* (Days)
13	***Final Bridge Plans***	***FS, HS, PDF***	***2, 6, 1***	**	***30***
13	***Final Wall Plans***	***FS, HS, PDF***	***2, 6, 1***	**	***30***
16	Preliminary Signing and Marking	FS, HS, PDF	2, 6, 1	As needed	21
16	New Sign requests	PDF	1	As needed	14
2,18	***Transportation Management Plan (TMP)***	***PDF***	***1***	***Within 120 days from NTP 1***	***21***
18	Traffic Control Plans (each Phase)	PDF	1	As needed	14
3	Conceptual Layout Plan	FS, PDF	2, 1	**	21
3	Interim Design	FS, HS, PDF	1, 10, 1	**	21
Various	***Final Plans (70-80%)***	***FS, HS, PDF***	***2, 10, 1***	**	***30***
	Released for Construction (RFC) Plans	***HS, FS***	***3, 10***	**	***NA***
3, 4	Notice of Intent (NOI) with final/signed Erosion Control Plans and construction activities schedule	PDF	1	**	14
3, 12	Erosion Sedimentation and Pollution Control Plans (ESPCP)	FS, HS, PDF	2, 6, 1	**	14
3	Shop Drawings	PDF	1	**	14
3	Temporary Works - where public safety may be affected	PDF	1	**	14
3	Plan Revisions During Construction	AR, HS, PDF	2, 1	**	14
3	Record Drawings (As-Built Plans)	FS, HS, PDF	See Section 2.7.1.2	**	14
3, 12	Hydraulic & Hydrology Report (submit together with the Bridge Preliminary Layout)	PDF	1	**	30
3, 11	Pavement Joints and Elevations	PDF	1	**	14
12	Restoration/Mitigation Plan(s)	AR, PDF	1	**	14
15	Landscaping Plans	AR, FS, HS, PDF	2, 6, 1	**	14
16	Intersection Design Studies	PDF	1	**	14

Section	Submittal Item	Format	Quantity	Delivery Date	Review Period* (Days)
3	Final Design Specifications, Reports, Whitepapers, etc.	AR, PDF	1	**	14
3	EOR site observation compliance report	PDF	1	See Section 3	14
N/A	Subcontracts	PDF	1	In accordance with the Construction Manual	14

*Review period is the period required for the generation of comments or the review time to determine the state or status of the document. Plan for multiple review periods that may be required for any submittal to secure Accepted or Approved status from GDOT.

If a submittal is not listed, the review time shall be 30 days per Volume 1, Article 6.3.2.

** Based upon the approved Baseline Project Schedule
*** Time of review will be based upon actual impact to Project

BOLDED and *Italicized* = requires FHWA review and approval

3.3.7 Additional Submittal Requirements

Obtain any Government Approvals or other approvals required to allow for implementation and construction of the Construction Phasing and Staging Plan.

3.3.7.1 Staged Design Submittals

The DB Team may submit Staged Design Submittals (components) for the Project. A Staged Design Submittal is a submittal that consists of a portion or portions of the Work within the limits of an accepted Construction Phase. For example, a Staged Design Submittal for a bridge might be categorized as foundations, substructures, abutments, or complete continuous units of superstructure. Staged Design Submittals for other components of the Project might include grading, drainage, signing and pavement marking, and erosion control. Ensure the Staged Design Submittals, Construction Phasing and Staging Plan, and Project Schedule are aligned and consistent. Ensure that Staged Design Submittals also includes all reports, specifications, studies, calculations, and supporting documents and information.

For each Construction Phase shown in the Construction Phasing and Staging Plan, either submit a complete set of drawings or make a series of Staged Design Submittals (components). The timing and content of Staged Design Submittals must be logical and include or be preceded by related items (e.g., bridge submittals must include or be preceded by related highway geometry; a bridge and its related retaining walls must be submitted together; etc.).

3.3.7.2 Changes to Accepted and Released for Construction Submittals

After a design package has been Released for Construction (RFC), any subsequent design changes must be submitted to GDOT with documentation from the EOR sufficient to justify the reasoning behind the change request. The DB Team must obtain written acceptance prior to its implementation as a plan revision, and prior to any related subsequent construction activity. Minor field adjustments or redline revisions do not require EOR approval or prior written acceptance.

3.3.7.3 Plan Presentation Requirements

Provide all plan submittals as required by and in accordance with the GDOT Plan Development Process (PDP), Electronic Data Guidelines (EDG) and the Plan Presentation Guide (PPG).

Ensure the Plans are fully dimensioned in English units and all elevations necessary for construction are shown similar to GDOT's normal practice. Prepare all plans on the scales according to GDOT's PPG.

Include details for all civil elements and calculations within proximity of the Site, for each location, so that these locations can be reviewed holistically and connections with communication and electrical networks are clearly understood.

3.3.7.4 Construction Plans Organization and Sheet Index

Assemble construction plans according to GDOT's PPG.

3.3.7.5 Computations

Record all design computations and computer printouts neatly on 8.5- by 11-inch sheets, fully titled, numbered, indexed, dated, and signed by the designer/Project manager and checker. Submit the computer files and one copy of the computations fully checked and appropriately bound to GDOT with the plans.

Submit a complete tabulation of the drainage analysis along with the calculations used to determine the size of drainage structures to GDOT.

3.3.7.6 Submittal Formats

Ensure each design submittal, in addition to electronic delivery in .pdf format on the PMCS, consists of scalable 11-by-17-inch or 12-by-18-inch drawings, full size 24-by-36-inch design drawings, and calculations. Provide a portable flash drive of the submittal including all InRoads and MicroStation V8 format files upon GDOT request.

Ensure documents for all Final Plan submittals (plans, calculations, specifications, reports, etc.) is sealed by a qualified Professional Engineer. In addition to written design review comments (if any), design drawings may be returned to the DB Team with any remarks indicated.

3.3.7.7 Additional Specifications

Prepare and submit specifications for Construction Work included in the plans which are not covered by GDOT's Standard Specifications, the Supplemental Specifications, and/or the Special Provisions as required in Attachment 3-1 in addition to the design drawings that include Georgia standards and details.

3.3.7.8 Submittals Process

Review of the Design Documents by GDOT may be limited to the basic requirements of the DB Documents, relating to design compliance and material types and may not include detailed review or checking of design of components and related details or the accuracy with which such designs are depicted on the design drawings.

Review or acceptance by GDOT or other Persons of any Design Documents does not relieve the DB Team of responsibility under the Contract, including the overall correctness of Design Documents, such as engineering mathematical computations. Submit all Design Documents, including plans, specifications, reports, calculations, shop drawings (where public safety is affected), and Permit documents to GDOT.

Provide all copies for distribution. GDOT will be responsible for distributing the submittals to all required parties of the contract.

Include with all submittals a cover letter describing the submittal, review period, and the due date for any GDOT response.

Include in all Submittals the DB Team's QA certification statement (in addition to the design consultant's QA certification statement for all design-related submittals) including a certification statement that the submittal complies with all terms and conditions of the Agreement, signed by the EOR. GDOT will reject any submittal if the QA certification statement is not included.

3.3.7.9 Required Participants of the Process

The QAM and DQAM, except as otherwise required in the DB Documents, will be primarily responsible for verifying that the accepted Design Quality Management Plan process as required in Section 2.3 (Quality Management Requirements) has been followed, verifying that the submittal meets all DB Document requirements, ensuring that all necessary Governmental Approvals have been obtained by the DB Team, and performing any review(s) as provided for in this Section 3.

Provide all required Submittals in compliance with the DB Documents.

3.3.7.10 GDOT Design Review Process

Provide the submittal to GDOT via the PMCS and the required copies in accordance with the DB Documents. Categorize submittals into Discipline Groups as follows:

1. Right of Way, Railroad, and Utilities (RRU Group)
2. Roadway, Drainage, and Maintenance of Traffic (RDMOT Group)
3. Bridge, Structures, Retaining Walls, and Aesthetics (BSRA Group)
4. ITS, Traffic (includes signing, pavement marking, signals, and lighting) (ITSTT)
5. All types (ALL Group)
6. Other (OTH)

GDOT will log in the submittal and distribute to the required review participants.

The review period begins the following Business Day after any submittal is received for the period prescribed in Volume 1 Article 6.3.2 and Table 3-1, except where there is a maximum number of concurrent submittals of a particular type specifically noted in this Section 3. In cases where the maximum is exceeded, the review period will begin when prior submittal reviews are completed so that the maximum number in concurrent review is not exceeded. For the general case where there is not a maximum number of concurrent submittals specifically noted in this Section 3, an additional seven days will be added to the prescribed review period whenever there are more than five concurrent submittals in review in the subject document's particular Discipline Group. Further, an additional seven days will be added for each additional increment of five concurrent submittals in review in a Discipline Group. For example, if there are six to 10 submittals in concurrent review in a Discipline Group, then an additional seven days are added; and if there are 11 to 15 submittals in concurrent review in a Discipline Group, then an additional 14 days are added, etc. For purposes of calculating the number of submittals, the accepted Project Schedule will generally be used as a guide, except that complementary documents, for example bridge plans and bridge calculations, will be considered a single Submittal. Documents that fully integrate multiple disciplines in the presentation, for example roadway and drainage plans, together with the respective calculations would be counted as one submittal. For documents or packages that include multiple bridges, each individual bridge will be counted as a separate submittal. For documents or packages that include multiple retaining walls, noise barriers, BFIs, or WFIs, GDOT determine the number of Submittals to be counted.

Once a review is complete, the drawings or Submittal will be designated by GDOT as either:

1. Accepted
2. Accepted with Comments
3. Rejected

The terms Accepted and Accepted with Comments mean that the design process may proceed and is not a notice that construction may begin.

If Accepted or Accepted with Comments: The GDOT representative will deliver the comments and, if necessary, return the drawings or Submittal via PMCS or hardcopy to the DB Team.

If Rejected: the GDOT representative will deliver the rejected drawings or Submittal via PMCS or hardcopy to the DB Team. Address the specific comments and resubmit. The resubmittal is a new Submittal and follows the same time period as provided in Volume 1, Article 6.3.2 and Table 3-1. Drawings or Submittals may be rejected without review if the submission is incomplete.

3.3.8 Shop Drawings and Temporary Works Submittals

3.3.8.1 General

Shop drawings include all working, shop, and erection drawings, associated trade literature, calculations, schedules, manuals, and similar documents submitted by the DB Team to define some portion of the Project work. The type of work includes both permanent and temporary works as appropriate to the Project. Permanent works include all the permanent structures and parts thereof required of the completed DB Documents. Temporary works include any temporary construction work necessary for the construction of the permanent works. This includes falsework, formwork, scaffolding, shoring, temporary earthworks, sheeting, cofferdams, special erection equipment, and the like. Falsework includes any temporary Construction Work used to support the permanent structure until it becomes self-supporting. Falsework includes steel or timber beams, girders, columns, piles and foundations, and any proprietary equipment including modular shoring frames, post shores, and adjustable horizontal shoring. Formwork includes any structure or mold used to retain plastic or fluid concrete in its designated shape until it hardens. Formwork comprises common materials such as wood or metal sheets, battens, soldiers and walers, ties, proprietary forming systems such as stay-in-place metal forms, and proprietary supporting bolts, hangers, and brackets. Formwork may be either permanent formwork requiring a shop drawing submittal such as stay-in-place metal or concrete forms or may be temporary formwork that requires certification by the Professional Engineer designing the specialized components (the Specialty Engineer) for construction affecting public safety and for major and unusual structures. Scaffolding is an elevated work platform used to support workmen, materials and equipment, but not intended to support the structure. Shoring is a component of falsework such as horizontal, vertical, or inclined support members. This term is interchangeable with falsework.

Construction affecting public safety is defined as construction that may jeopardize public safety, such as structures spanning functioning vehicular roadways, pedestrian walkways, railroads, navigation channels of navigable waterways, and walls or other structure foundations located in

embankments immediately adjacent to functioning roadways. It does not apply to those areas of the Site under the DB Team's control and outside the limits of, or influence of, normal public access.

For the purpose of shop drawing review and processing as described in this Section 3.3.8, the term Shop Drawing Engineer means a Professional Engineer as defined in Exhibit 1 of Volume 1 and applies to the initiator or producer of shop drawings regardless of whether or not that party is normally the lead Professional Engineer for the design or the EOR; and the term Shop Drawing Checking Engineer means a Professional Engineer as defined in Exhibit 1 of Volume 1 and applies to the shop drawing checker and certifier regardless of whether or not that party is normally the EOR, the Shop Drawing Engineer, or the lead Professional Engineer for the design.

3.3.8.2 Work Items Requiring Shop Drawings

In general, GDOT requires shop drawings for items of work not fully detailed in the plans which require additional drawings and coordination prior to constructing the item, including:

1. Bridge components not fully detailed in the plans (i.e., segments, steel girder details, post-tensioning details, handrails, etc.)
2. Retaining wall systems
3. Precast box culverts
4. Non-standard drainage structures, attenuators, and other nonstructural items
5. Building structures
6. Drainage structures, attenuators, and other nonstructural items
7. Design and structural details furnished by the DB Team in compliance with the DB Documents
8. Temporary Works affecting public safety

Submit erection plans for curved steel bridges.

3.3.8.3 Schedule of Submittals

Include shop drawings in the required Project Schedule. For each planned shop drawing submittal, define the type and approximate number of drawings or other documents that are included and the planned submittal date, considering the processing requirements herein. Coordinate subsequent submittals with Project Schedule to allow sufficient time for review and re-submittal as necessary.

3.3.8.4 Style, Numbering, and Material of Submittals

3.3.8.4.1 Drawings

Submit the shop drawings electronically in .pdf format on the PMCS. Furnish four sets of shop drawings to GDOT for review in addition to the electronic delivery. Consecutively number each sheet in the submittal series, and indicate the total number in the series (i.e., 1 of 12, 2 of 12, 12 of 12), and include on each sheet the following items as a minimum requirement:

1. Bridge Numbers
2. Drawing title and number
3. A title block showing the names of the fabricator or producer and the DB Team for which the work is being done
4. The initials of the persons responsible for the drawing
5. The date on which the drawing was prepared
6. The location of the items within the Project
7. The DB Team's approval stamp with date and initials
8. The signature and seal of the Specialty Engineer when applicable

A re-submittal will be requested when any of the required information is not included.

3.3.8.4.2 Other Documents

Provide four sets of original documents or clearly legible photographic or xerographic copies of documents other than drawings, such as trade literature, catalogue information, calculations, and manuals in addition to electronic delivery in .pdf format on the PMCS.

Clearly label and number each sheet in the submittal to indicate the total number of sheets in the series (i.e., 1 of 12, 2 of 12, . . . 12 of 12), and provide an additional three sets of documentation for items involved with precast pre-stressed components and an additional two sets of documentation for items involving structural steel components.

Bind and submit all documents with a table of contents cover sheet, and list on the cover sheet the total number of pages and appendices. Include a title referencing the submittal items, the name of the firm and persons responsible for the preparation of the document, the DB Team's approval stamp with date and initials, and, when applicable, the signature and seal of the Specialty Engineer.

Submit appropriately prepared and checked calculations and manuals that clearly outline the design criteria, and include on the internal sheets the initials of the persons responsible for preparing and checking the document.

Clearly label trade literature and catalogue information on the front cover with the title, date, and name of the firm and persons responsible for that document.

3.3.8.4.3 Qualified Products List

Shop drawings are not required for Qualified Products accepted by GDOT and included on the Qualified Product Lists as specified in Attachment 3-1. Submit shop drawings to GDOT after the Shop Drawing Checking Engineer has reviewed and accepted for conformance with the DB Documents and compliance to the design intent for non-Qualified Products. Upon completion of GDOT's review, GDOT's red ink review stamp will signify an officially reviewed shop drawing and will state either Released for Construction or Released for Construction as Noted.

3.3.8.4.4 DB Team-Originated Design

Submit shop drawings and applicable calculations to the Shop Drawing Checking Engineer for review, and ensure that each sheet of the shop drawings and the cover sheet of the calculations are signed and sealed by the Shop Drawing Engineer.

3.3.8.4.5 Temporary Works

For construction affecting public safety, submit shop drawings and the applicable calculations for the design of special erection equipment, false-work, scaffolding, etc. to the Shop Drawing Checking Engineer, and ensure that each sheet of the shop drawings and the cover sheet of the applicable calculations is signed and sealed by the Shop Drawing Engineer.

3.3.8.4.6 Formwork and Scaffolding

The DB Team is solely responsible for the safe installation and use of all formwork and scaffolding. GDOT does not require any formwork or scaffolding submittals unless such work would be classified as construction affecting public safety.

3.3.8.4.7 Other Miscellaneous Design and Structural Details

Submit shop drawings and the applicable calculations to the Shop Drawing Checking Engineer, and ensure that each sheet of the shop drawings and the cover sheet of the applicable calculations is signed and sealed by the Shop Drawing Engineer.

3.3.8.5 Processing of Shop Drawings

3.3.8.5.1 Responsibility for Accuracy and Coordination of Shop Drawings

Coordinate, schedule, and control all submittals, with a regard for the required priority, including those of the various subcontractors, suppliers, and GDOT, to provide for an orderly and balanced distribution of the work. Also coordinate, review, date, stamp, accept, and sign all shop drawings prepared by the DB Team, Contractors, or DB Team-Related Entities (subcontractor, fabricator, supplier, etc.) prior to submitting them to GDOT for review. Submittal of the drawings confirms verification of the work requirements, units of measurement, field measurements, construction criteria, sequence of assembly and erection, access and clearances, catalog numbers, and other similar data. Indicate on each series of drawings the specification section and page or drawing number of the RFC plans to which the submission applies, indicate on the shop drawings all changes from the RFC drawings, and itemize all changes in the letter of transmittal. Likewise, whenever a submittal conforms to the RFC plans, clearly state so in the transmittal letter. Schedule the submission of shop drawings to allow a GDOT review period as specified in the DB Documents. The review period commences upon GDOT's receipt of the valid submittal or re-submittal and terminates upon the transmittal of the submittal back to the DB Team. The DB Team is discouraged from transmitting voluminous submittals of shop drawings at one time. For submittals transmitted in this manner, allow for additional review time. Only shop drawings distributed by GDOT with the red ink stamps are

valid and all Work that the DB Team performs in advance of GDOT's release of shop drawings will be at the DB Team's risk.

3.3.8.5.2 Scope of Review by the Shop Drawing Checking Engineer

The Shop Drawing Checking Engineer's review of the shop drawings is for conformity to the requirements of the DB Documents and to the intent of the design. The Shop Drawing Checking Engineer's review of shop drawings, which includes means, methods, techniques, sequences, and construction procedures, is limited to the effects on the permanent works. The Shop Drawing Checking Engineer's review of submittals, which includes means, methods, techniques, sequences, and construction procedures, does not include an in-depth check for the ability to perform the Work in a safe or efficient manner.

3.3.8.5.3 Special Review by the Shop Drawing Checking Engineer

For construction affecting public safety, the Shop Drawing Checking Engineer will make an independent design review of all relevant shop drawings and similar documents. Do not proceed with construction of the permanent works until receiving the Shop Drawing Checking Engineer's approval. Send a copy of the approval letter to GDOT. The review of these shop drawings is for overall structural adequacy of the item to support the imposed loads and does not include a check for economy, efficiency, or ease of construction.

3.3.8.6 Other Requirements for Shop Drawings for Bridges

3.3.8.6.1 Shop Drawings for Structural Steel and Miscellaneous Metals

Furnish shop drawings for structural steel and miscellaneous metals. Ensure shop drawings consist of working, shop, and erection drawings, welding procedures, and other working plans showing details, dimensions, sizes of material, and other information necessary for the complete fabrication and erection of the metal work.

3.3.8.6.2 Shop Drawings for Concrete Structures

Furnish shop drawings for concrete components that are not cast-in-place and are not otherwise exempted from submittal requirements, also furnish shop drawings for all details that are required for the effective prosecution of the concrete work and are not included in the DB Documents such as special erection equipment, masonry layout diagrams, and diagrams for bending reinforcing steel, in addition to any details required for concrete components for the permanent work.

3.3.8.6.3 Special Construction Submittals

No requirements.

3.3.8.6.4 Shop Drawings Requiring Railroad Coordination

No requirements.

3.3.8.6.5 Modifications on Construction

Where GDOT allows the DB Team to make modifications to the permanent works for the purposes of expediting the DB Team's chosen construction methods, submit proposals to the EOR for review and approval prior to modifying the works. Submit proposals for minor modifications under the shop drawing process. Indicate on all drawings the changes from the DB Documents and itemize all Change Requests in the letter of transmittal. GDOT will require additional submittals for major modifications. Minor modifications are those items that, in GDOT's sole discretion, do not significantly affect the quantity of measured Work, or the integrity or maintainability of the structure or its components (for example, adjusting concrete dimensions, substituting steel plate sizes, changing reinforcing bar size and spacing, etc., all within the acceptable limits of the design). Major modifications are any modifications that, in the sole opinion of GDOT, significantly affect the quantity of measured Work, or the integrity or maintainability of the structure or its components; for example, substituting alternative beam sizes and spacings, changing material strength or type, and the like. Provide signed and sealed revised sheets to GDOT for any required revisions to the Released for Construction plans prior to submitting shop drawings. GDOT's decision on the delineation between a minor and a major modification and the disposition of a proposal is final.

3.3.9 Release for Construction Documents

Provide sufficient review and revision time in the schedule and account for possible multiple re-submittals to secure a final Release for Construction prior to starting construction on any particular Element of the Work. Construction cannot proceed on any of the Work until the design Submittal has been reviewed, accepted, and Released for Construction.

For final Submittals, after updating the documents to resolve all comments (as applicable) and receiving written notice from GDOT that the drawings or Submittal are Released for Construction, stamp the accepted set Released for Construction and distribute copies to GDOT within three Business Days.

4 ENVIRONMENTAL

4.1 General

Comply with all Environmental Law and policies set forth by the federal, state, and local agencies with jurisdiction over the construction activities associated with the Project and as described in the approved Environmental Document and permits. Follow all pertinent policies and procedures as described in the 23 CFR 771, O.C.G.A. 12-16-1, and the most recent version of the GDOT Environmental Procedures Manual.

If the Environmental Documents have not yet been approved, the alternative has not yet been selected; therefore, the No-Build option will still be a viable alternative for the Project. However, if the No-Build alterative is selected, the Project will be terminated according to Volume 1, Article 19 of the Design-Build Agreement (DBA).

4.2 Administrative Requirements

4.2.1 Standards

Conduct activities in this Section 4 in accordance with Environmental Law, GDOT's Environmental Procedures Manual, other Attachment 3-1 manuals, and other provisions of the DB Documents.

4.2.2 Personnel Requirements

4.2.2.1 Environmental Compliance Manager

Designate an Environmental Compliance Manager (ECM) who will work through an environmental team (ET), as detailed in this Section 4.2.2, to prevent, minimize, and/or correct any violation of or noncompliance with Environmental Approvals. The ET may include the following persons (some persons may serve multiple roles, provided the required qualifications are met):

- NEPA Specialist
- Archeologist
- Historian
- Natural Resource Biologist
- Water Quality Specialist
- Air Quality Specialist
- Noise Specialist
- Hazardous Materials Manager
- Worksite Erosion Control Supervisor (WECS)

The ECM reports and coordinates all issues directly with GDOT and the DB Team's Project Manager. In the event the ECM, in consultation with the DB Team's Project Manager and GDOT, is unable to reach satisfactory resolution of environmental issues, the ECM will provide written notification to the DB Team and GDOT outlining the concerns, actions taken in attempt to correct the concerns, and recommend a course of action.

The ECM reports immediately to GDOT and DB Team any violation or non-compliance and includes with any such report the appropriate recommendations for corrective action including stoppage of Work.

The ECM coordinates with GDOT, the DB Team, and appropriate Governmental Entities. The ECM also submits all necessary environmental documentation and monitoring reports to the appropriate Governmental Entities and when applicable, through GDOT, to the extent necessary to maintain compliance with applicable Environmental Approvals.

The ECM will be an employee or subcontractor of the DB Team. The DB Team will not have the ability to relieve the ECM of his or her duty without the written approval of GDOT. Should the DB Team desire to replace the ECM, submit the résumé of a replacement candidate. The replacement candidate will be available to the Project within 30 days after delivery of GDOT's written acceptance. In the absence of the ECM, the DB Team's Hazardous Materials Manager may act as an interim ECM with GDOT approval.

Qualifications: The ECM candidate must have at least five years of experience successfully managing environmental compliance of a similar type of project as the Project. This person or firm must be prequalified by GDOT. Ensure all costs associated with the ECM are included in the Proposal. The qualifying experience required of an ECM candidate must include the following:

1. Has developed and managed a storm water pollution prevention plan
2. Has developed and managed a hazardous substance and petroleum products management plan
3. Has implemented environmental mitigation plans
4. Has provided environmental and personal protection training
5. Has monitored compliance with Section 404 Permit conditions

The ECM's qualifying experience must demonstrate familiarity with the following:

1. The scope and terminology of ASTM E 1527-05, Standard Practice for Environmental Site Assessment Process
2. Provisions of the NPDES Construction General Permit (GAR1000002)
3. Requirements of Section 404 and permit provisions

4.2.2.2 Reserved

4.2.2.3 Reserved

4.2.2.4 NEPA Specialist

The ECM designates a NEPA Specialist to provide expertise in NEPA laws, regulations, and policies during the course of the Work. The NEPA Specialist will be able to address environmental justice (EJ) issues related to the Project, if applicable.

The ECM designates personnel if a need arises for renewed activities to comply with environmental laws.

Qualifications: The NEPA Specialist meets the certification requirement of GDOT Transportation Planning Prequalification Category 1.06(a) NEPA Documentation.

4.2.2.5 Cultural Resource Management Personnel

The ECM designates an Archeologist, Architectural Historian, Historian, and/or Historical Architect to provide expertise in monitoring impacts to cultural resources during the course of the Work.

The ECM designates personnel if a need arises for renewed activities to comply with cultural resources laws.

Qualifications: The Cultural Resource Management Personnel meets the certification requirement of GDOT Transportation Planning Prequalification Category 1.06(b) History and 1.06(f) Archaeology. Cultural Resource Management Personnel must meet professional standards under regulations developed by the Secretary of the Interior, found at http://www.nps.gov/history/local-law/Prof_Qual_83.htm.

4.2.2.6 Natural Resource Biologist

The ECM designates a Natural Resource Biologist to provide expertise in monitoring impacts on wildlife and the natural environment during the course of the Work. The ECM designates personnel if a need arises for renewed activities to comply with natural resources laws.

Qualifications: The Natural Resource Biologist must meet the certification requirement of GDOT Transportation Planning Prequalification Categories 1.06(e) and 1.06(g).

4.2.2.7 Water Quality Specialist

The ECM designates a Water Quality Specialist to provide expertise in permitting delineation, storm water pollution prevention, and the protection of jurisdictional waters during the course of the Work.

Qualifications: The Water Quality Specialist must have verifiable experience implementing Water Quality Certification Plans and be able to demonstrate a working knowledge of the National Pollutant Discharge Elimination System and MS4 permit requirements applicable to the Project. The Water Quality Specialist must meet the certification requirements of GDOT Transportation Planning Prequalification Category 1.06(e) and 1.06(g).

4.2.2.8 Air Quality Specialist

The ECM designates an Air Quality Specialist to provide expertise for air quality studies during the course of the Work, if necessary.

Qualifications: The Air Quality Specialist must meet the certification requirement of GDOT Transportation Planning Prequalification Category 1.06(c).

4.2.2.9 Noise Specialist

The ECM designates a Noise Specialist to provide expertise for noise studies during the course of the Work, if necessary.

Qualifications: The Noise Specialist must meet the certification requirement of GDOT Transportation Planning Prequalification Category 1.06(d).

4.2.2.10 Hazardous Materials Manager

The ECM designates a Hazardous Materials Manager to provide expertise in the safe handling of Hazardous Materials required to perform the Work and those that may be discovered/impacted during the term of the Agreement. The Hazardous Materials Manager conducts appropriate activities such as the following:

1. Schedule and/or conduct training for the DB Team's employees
2. Verify all employee certifications prior to and required for any handling of Hazardous Materials
3. Maintain records of all incidents involving Hazardous Materials and notify the ECM, GDOT, and appropriate authorities in writing of any such incidents

Qualifications: The Hazardous Materials Manager must meet the certification requirements of GDOT Soils, Foundation and Material Testing, Hazardous Waste Site Assessment Studies 6.05, and be a qualified professional with 40 hours of HAZWOPER certification. In addition, the Hazardous Material Manager must have at least five years of experience on similar projects in the following areas:

1. Development of investigative work plans, site investigation reports, and remedial action plans or equivalent reports necessary and acceptable to the EPA in material discovery and remediation efforts of Hazardous Materials
2. Investigation and remediation of Hazardous Materials following GDOT Environmental Procedures Manual guidelines

4.2.2.11 Worksite Erosion Control Supervisor (WECS)

Before beginning Work, designate a Worksite Erosion Control Supervisor (WECS) to initiate, install, maintain, inspect, and report the condition of all erosion control devices as described in GDOT Standard Specifications Sections 160 through 171 or in the DBA and erosion, sedimentation, and pollution control plan (ESPCP) documents. The designee must submit their qualifications on the GDOT provided resume form for consideration and approval. The DB Team may utilize additional persons having WECS qualifications to facilitate compliance, however, only one WECS will be designated at a time.

The WECS and alternates must:

1. have at least one year of experience in erosion and sediment control, including the installation, inspection, maintenance and reporting of BMPs;
2. successfully completed the Georgia Soil and Water Conservation Commission Certification Course Level IA and GDOT's WECS Certification Course; and
3. provide phone numbers where the WECS can be located 24 hours a day.

The WECS' duties include the following:

1. Be available or have an approved representative available 24-hours a day and have access to the equipment, personnel, and materials needed to maintain erosion control and flooding control.
2. Inform GDOT in writing whenever the alternate WECS assumes project responsibilities.
3. Ensure that erosion control deficiencies are corrected within 72 hours or immediately during emergencies. Deficiencies that interfere with traffic flow, safety, or downstream turbidity are to be corrected immediately.
4. During heavy rain, have the construction area patrolled day and night, any day of the week to quickly detect and correct erosion or flooding problems before they interfere with traffic flow, safety, or downstream turbidity.
5. Be on the site within three hours after receiving notification of an emergency prepared to positively respond to the conditions encountered. GDOT may handle emergencies without prior notice to the DB Team. GDOT will recover costs for emergency maintenance work according to GDOT Standard Specifications Subsection 105.15, Failure to Maintain Roadway or Structures.
6. Maintain and submit for the Project records, as-built Erosion and Sedimentation Control Plans that supplement and graphically depict EC-1 reported additions and deletions of BMPs. The as-built plans are to be accessed and retained at a GDOT facility at all times.
7. The WECS must maintain a current certification card for the duration of the Project. Recertification of the WECS is required prior to the expiration date shown on the Certification card in order to maintain certification and the WECS position for the Project.
8. Ensure that both the WECS and the alternate meet the criteria of this Section 4.2.2.11.

Failure of the WECS or alternate to perform the duties specified in the Contract, or whose performance has resulted in a citation being received from a State or Federal Regulatory Agency (e.g., the Georgia Environmental Protection Division) will result in one or more of the following:

1. Suspension of the WECS' certification for a period of not less than 30 days
2. Removal of the Contractor's Project superintendent in accordance with GDOT specification subsections 105.05 and 108.05 for a period not less than 14 days
3. GDOT-wide revocation of the WECS certification for a period of 12 months
4. Removal of the Contractor's Project superintendent in accordance with GDOT Standard Specifications, subsections 105.05 and 108.05

4.3 Environmental Approvals

4.3.1 Responsibilities Regarding Environmental Documents

The DB Team is responsible for coordination with GDOT and other required approval agencies to ensure that commitments made during the environmental review are being met. The DB Team is responsible to reassess Project impacts and for additional associated costs incurred due to any changes in the Project impacts as described in the approved Environmental Document. This may require resubmittal of environmental studies for approval by applicable agencies.

GDOT is responsible for completing and resubmitting environmental documentation. The DB Team is not allowed to complete the environmental documentation or reevaluation.

Execute the Environmental Commitments required by the approved Environmental Documents, DB Documents, Governmental Entities, Governmental Approvals, and all applicable federal and State Law.

Limits of the Existing and Proposed Right of Way will be described in the approved Environmental Document.

Ensure Work complies with approved Environmental Documents, permits, and compliance requirements for any additional actions throughout the Term of the DB Documents. Monitor and document Work activities so that documents providing evidence for compliance are available to FHWA and Governmental Entities (as applicable) and GDOT for inspection at any time. Evidence of compliance activities may include photo documentation and other appropriate methods to demonstrate compliance. Execute the Environmental Mitigation Plan, which lists responsible parties for Environmental Commitments detailed in the approved Environmental Document as agreed to by GDOT and/or other approval agencies.

Consider the use of environmentally sustainable practices and/or materials in the development of the Project.

Environmental Documents were prepared and approved by GDOT prior to the Effective Date. During the Term, such approvals may require re-evaluation, amendment, or supplement as the Work progresses or in order to accommodate actions not identified in the approved Environmental Document or not covered specifically by existing resource agency coordination and permits. The DB Team is responsible to validate and provide design information to support additional environmental studies (cultural resources, ecology, aquatics, traffic, noise, and/or air) conducted by GDOT or on behalf of GDOT by others. Comply with the Environmental Commitments identified in the approved Environmental Document within the final limits of the Project and subsequent approved Environmental Documents as updated to incorporate the DB Team's Conceptual Layout Plan of Project or Design Documents or due to regulatory or policy changes. Follow GDOT policies and procedures when conducting these activities for the Project.

Any changes to the Project as described in the NEPA Approval may require the DB Team to reassess impacts and submit information to GDOT for incorporation into reevaluation reports and studies. Follow all pertinent policies and procedures as described in the 23 CFR 771, 23 CFR 772, 23 CFR 774, and the GDOT Environmental Procedures Manual. GDOT will provide the costs to prepare and finalize the NEPA Re-evaluation documents for FHWA. The DB Team is responsible to prepare and pay for supporting documentation for any design changes proposed by the DB Team that differ from the NEPA Approval at the time of the Proposal Due Date.

If the DB Team's Conceptual Layout Plan of the Project or Design Documents deviate from the plan set incorporated into the approved Environmental Documents, then GDOT and/or Governmental Entities will need to conduct an assessment to determine whether the approved

Environmental Documents remain valid. Provide information to support evaluation of the deviations from the plan set incorporated into the approved Environmental Documents. Facilitate a meeting with GDOT within 45 days of NTP 1 to discuss potential deviations from the approved Environmental Document. The following terms define GDOT and/or FHWA required documentation needed to assess impacts to the approved Environmental Document:

1. **No Change Reevaluation:** No design or regulatory changes have occurred since the last approved Environmental Document. As applicable, GDOT will utilize document procedures following the Memorandum of Agreement with FHWA dated July 19, 2016.
2. **Change Reevaluation (design modifications):** The Conceptual Layout Plan for the Project or Design Documents contain modifications to the design in the plan set incorporated into the approved Environmental Documents; the Project corridor in the area of the changes (or as applicable) must be considered for additional or reduced environmental impacts. There may be a need for additional agency coordination as a result of the design modifications. As applicable, GDOT will utilize document procedures following the Memorandum of Agreement with FHWA dated July 19, 2016.
3. **Change Reevaluation (regulatory/policy changes):** Changes in Law or regulatory practice may require additional survey or technical analysis, environmental condition changes over time, and associated agency coordination. The additional analysis may be required regardless of design changes, construction staging, etc. (There may be no action taken by the design team that would trigger the additional technical analysis).

Ensure compliance with the conditions and schedules set forth in amendments to any approved Environmental Documents due to deviations in the plan set incorporated into the approved Environmental Documents in the Conceptual Layout Plan for the Project and/or the Design Documents.

Assume all risk arising out of or related to deviations from the plan set incorporated into the approved Environmental Documents. The DB Team is encouraged to minimize deviations from the plan set incorporated into the approved Environmental Documents. The DB Team is responsible to provide all information reasonably required to support evaluation of deviations from the plan set incorporated into the approved Environmental Documents and to comply with all policies and procedures of GDOT and Governmental Entities having jurisdiction over the Project. GDOT is responsible for all coordination of environmental studies with appropriate Governmental Entities. The DB Team is responsible to provide GDOT with the information reasonably required for coordination with Governmental Entities.

Implement the commitments per the Environmental Document and Environmental Commitments and adhere to the Special Provision 107.23.H requirements. The DB Team is responsible for the purchase of all required mitigation credits. This supporting information is listed below:

Table 4-1: Environmental Documentation Contained in Section 4 Attachments

Attachment	Document
Attachment 4-1	Environmental Commitments Table (includes identification of responsible parties)
Attachment 4-2	Special Provision Section 107.23.H

4.3.2 GDOT Review and Approval of Environmental Documents and Permits

The approval time frames for Environmental Documents are listed in Tables 4-2 and 4-3. The tables below do not include any required public comment period and time for responding to the public comments. Upon receipt of Final Plans covering the technical report study area established in the NEPA Approval, GDOT will be responsible for developing the technical report addenda and NEPA Approval reevaluations as provided in Tables 4-2 and 4-3. GDOT will coordinate and provide approved documentation to the appropriate Governmental Entities. The review and issuance time periods listed in Tables 4-2 and 4-3 are per agency and may not occur concurrently. GDOT reserves the right to request revisions to the tables as needed to meet Governmental Entity approval. The timeframe for the development of the technical studies and NEPA document reevaluation are subject to the extent of change proposed by the DB Team; therefore, GDOT reserves the right to modify schedule durations as appropriate after receipt of the DB Team's Preliminary Plans.

Table 4-2: GDOT-Led Environmental Preparation and Approval

Document*	Governmental Entity Approval Time Frame	Reviewing Governmental Entity
Environmental Document Reevaluation Approval	Prepare Document: 30 days (from approval of Technical Report Addendum)	GDOT
	Revise Document: 7 days	GDOT
	Review period 1: 30 days Review period 2: 14 days	GDOT
	Review period 1: 30 days Review period 2: 14 days	FHWA
Ecology Report and Addendum	Prepare Survey and Report Addendum: 30 days (from receipt of DB team's preliminary design plans, change description, and calculated impacts to resources)	GDOT
	Revise Addendum: 7 days	GDOT

Document*	Governmental Entity Approval Time Frame	Reviewing Governmental Entity
	Review period 1: 30 days Review period 2: 14 days	GDOT
	30 days	USACE
	45 days (informal Section 7)	USFWS
	135 days (for formal Section 7)	USFWS
	45 days (for protected species - for Fish and Wildlife Coordination Act concurrence)	USFWS
	45 days (Informal Section 7)	NMFS
Section 106 AOE Addendum	Prepare AOE Addendum: 21 days	GDOT
	30 days	GDOT
	Revise AOE Addendum: 7 days	GDOT
	14 days	GDOT
	30 days	State Historic Preservation Officer (SHPO)
Environmental Stewardship Provision (ESP) and Mitigation Determination package required prior to Section 404 permit	30 days	GDOT
	120 days	USACE
Public involvement for noise barrier voting	Logistics, Fieldwork, voting, ballot, tally, and dry run:45 days	GDOT
	30 days	GDOT
	15 days	FHWA
Noise Report and Addendum	Prepare Document: 30 days (from acceptance of Preliminary Plans, approval of horizontal/vertical roadway plans for Traffic Noise Model (TNM))	GDOT

Document*	Governmental Entity Approval Time Frame	Reviewing Governmental Entity
	60 days	GDOT
	Revise noise report: 21 days	GDOT
	30 days	FHWA
Air Quality Report and Addendum	Prepare Document: Memo to file for no change: 7 days	GDOT
	30 days	GDOT
Traffic Report and Addendum	Prepare Document: 60 days	GDOT
	45 days	GDOT or FHWA (per Projects of Division Interest (PoDI) Agreement)

*FHWA intends to publish a notice in the Federal Register following NEPA Approval and the Section 404 permit, as applicable. If such a notice is published, claims seeking judicial review of this federal action will be barred unless such claims are filed within 150 days after the publication date of the Federal Register notice for each federal action (e.g., NEPA Approval and/or Section 404 permit). At minimum, the period of time may only be limited by the Administrative Procedures Act of 1946 (APA) (5 United States Code [USC] Section 701-706).

Assume responsibility for preparing required permits and permit modifications as stated in Table 4-3 and pay all fees required. Provide to GDOT copies of receipts of delivery of the applications and paid fees to the permitting agencies. For Notices of Termination (NOT), provide a copy of the acknowledgement of receipt of the NOT by EPD.

Assume responsibility to obtain all other permits not included in Table 4-3 to meet the requirements of the DB Documents, including fees for blasting plan review by Governmental Entities. GDOT is responsible for reviewing the permits and permit modifications, and submitting to the appropriate Governmental Entities, unless the applicant is listed as the DB Team. Documentation not meeting current submission standards or requirements of Governmental Entities will be returned to GDOT and revised by a qualified independent consultant approved by GDOT at DB Team's cost. GDOT reserves the right to review, comment on, require revisions to, and reject for resubmission documentation submitted to GDOT by the independent consultant or the DB Team for environmental compliance or approval. The agency review time frame for permits is specified in Table 4-3. The review and issuance time periods listed in Table 4-3 for DB Team-led approvals do not apply to any revisions of the new permit applications proposed by the DB Team's Conceptual Layout Plan of Project.

Table 4-3: DB Team-Led Environmental Permit Approval

Permit Required	Agency Review and Issuance Time Period (Calendar Days)[4]	Listed Applicant	Preparer of Application
United States Army Corps of Engineers (USACE) Section 404			
Section 404 General Permit[1]	140	GDOT	DB Team
Section 404 Individual Permit[2]	240	GDOT	DB Team
Subsurface testing of all Underground Storage Tanks and Hazardous Materials	150	GDOT	DB Team
National Pollutant Discharge Elimination System (NPDES) Construction General Permit (GAR100002), Notice of Intent (NOI)[3]	14	DB Team	DB Team
NPDES Construction General Permit (GAR100003), Notice of Intent (NOI)[3]	14	DB Team	DB Team
Georgia Stream Buffer Variance	150	GDOT	DB Team

[1] This applies to Section 404 permitting and if additional impacts are incurred after the permit has been approved, a new permit that covers all impacts is required and the original review times apply to the new permit. No work is authorized in the areas of the previous permit until the new permit is approved and construction authorization is received.

[2] This applies to Section 404 permitting impacts which may exceed the cumulative threshold for a General Permit.

[3] Information on the permit including Notice of Intent (NOI) and Notice of Termination (NOT) and changes that went into effect on August 1, 2018 can be found at https://epd.georgia.gov/npdes-construction-storm-water-general-permits. A Fact Sheet on the permits can be found at https://epd.georgia.gov/sites/epd.georgia.gov/files/related_files/site_page/Factsheet - NPDES Construction General Permits - May 2018.pdf

[4] The review and issuance time periods will commence once a completed permit package that complies with the requirements of the DB Documents is accepted by GDOT and submitted to the issuing agency and end once the permit is issued by the appropriate Governmental Entity. Therefore, schedule several review periods to ensure proper planning to accomplish the entire process for each required permit. Each GDOT review period is 30 days. Should the Submittal not be complete or rejected as provided in Section 3 (Design and Submittals), each subsequent review period will be 15 days and is excluded from the timeframe in Table 4-3 above.

The above permits and review times do not contemplate offsite plant or other offsite activity that the DB Team may propose for use in construction or other non-permanent construction.

Assume responsibility for payment of any fees to obtain any necessary permits or approvals, for any fines incurred as a result from failure to obtain any necessary permits or approvals, and/or for any fines levied as a result of inadequate or improper installations.

4.3.3 Comprehensive Environmental Protection Plan

Adopt a proactive approach for overseeing and inspecting environmental Work during construction to help guard against unanticipated impacts to the environment. Comply with the scope of environmental commitments (Environmental Commitments Table) from the Environmental Documents, including the NEPA/GEPA document, Special Provision Section 107.23.H, environmental permits, and other environmental approvals.

Develop, execute, and maintain a Comprehensive Environmental Protection Plan (CEPP) for the Work to ensure environmental compliance with all applicable environmental laws and commitments. Ensure the CEPP obligates the DB Team to protect the environment and document the measures taken during the performance of the Work to avoid, minimize, and mitigate impacts on the environment from the design and construction activities of the Project. Ensure the CEPP effectively demonstrates in detail the DB Team's knowledge of all applicable Project-specific Environmental Approvals, issues, and commitments, as well as applicable environmental laws, as set forth in this Section 4 and elsewhere in Volume 2. It must also describe the processes to follow during the course of the Work to comply with those Environmental Approvals, issues, and commitments and laws, as well as the documentation required to validate compliance. Ensure all monitoring and reporting activities are concise and consistent throughout the term of the Agreement as applicable to the activities being performed and are in accordance with the requirements set forth in the environmental laws. Ensure the CEPP also effectively describes the quality control and assurance measures that the DB Team will implement to verify the compliance of the CEPP with all applicable environmental laws. Ensure the CEPP establishes a goal of zero environmental violations during the performance of all Work activities while meeting each regulatory agency's permitting requirements and sets forth detailed processes for rectifying such violations in an appropriate and timely manner should violations occur.

4.3.4 Hazardous Materials Management Plan

Prepare a Hazardous Materials Management Plan (HMMP) for the safe handling, storage, treatment, and/or disposal of Hazardous Materials, whether encountered at or brought onto the Project Site by the DB Team, a third party, or otherwise, during the term of the Agreement. Submit the final HMMP to GDOT for review and approval within 60 days of NTP 1; approval of the Plan by GDOT is be a condition of commencement of Construction Work. Follow the federal Environmental Protection Agency (EPA), EPD guidelines, and GDOT Policies and Procedures for Underground Storage Tank (UST), and Hazardous Waste (HW) Site Investigation Procedure.

Ensure the HMMP includes procedures compliant with all applicable environmental laws and the following at a minimum:

1. Updated Material Safety Data Sheets (MSDS) for all chemicals to be used on the Project, per OSHA requirements, for the term of the Agreement
2. Designated individuals responsible for implementation of the plan
3. Procedures for identifying and documenting potential contaminated sites that might impact Project development
4. Procedures for mitigation of known contaminated sites anticipated to impact construction
5. Procedures for mitigation of unanticipated contaminated sites encountered during construction
6. Procedures for developing a detailed Spill Response Plan for the term of the Agreement
7. Process for training personnel for responding to and mitigating incidents involving contamination or waste
8. Provisions for appropriate storage and disposal of all waste encountered or disposed of on the Project for the term of the Agreement
9. Provision for a Hazardous Materials training module as an element of the EPTP component of the CEPP
10. Procedures for preparing Underground Storage Tank/Hazardous Waste (UST/HW) site investigation reports, and package submittals to the Environmental Testing Unit of the Office of Materials and Testing (OMAT) for review in the event that Hazardous Materials are discovered during construction
11. Identification and contact information for designated responsible individuals

Ensure the HMMP includes provisions for making all workers aware of the potential Hazardous Materials to which they may be exposed, limiting Contractors and other Site workers' exposure to Hazardous Materials and providing all necessary personal protection equipment to protect workers from exposure. Ensure the HMMP requires the DB Team to provide any non-DB Team personnel who visits the Project area with the appropriate personal protection equipment.

Ensure the HMMP requires that all personnel of the DB Team-Related Entities handling Hazardous Materials be trained and certified at least to the minimum requirements established under the current guidelines of OSHA 1910.120 (HAZWOPER Training).

Further, the HMMP must also include procedures for ensuring that all applicable certifications, licenses, authorizations, and Governmental Approvals for DB Team personnel handling Hazardous Materials are current and valid through the duration of the Work.

5 RIGHT OF WAY (ROW) – DB TEAM ACQUISITIONS

5.1 General

This section sets forth the activities assigned to the DB Team, including pre-acquisition and acquisition activities, and it designates which activities GDOT will conduct.

GDOT will provide the DB Team with Right-of-Way Plans identifying the Proposed ROW and Easements. The existing and required right of way plans are included as Attachment 5-1 (Existing Right of Way and Required Right of Way).

Develop Final Right of Way Plans and submit for Approval.

No additional real property rights can be acquired from Parcel 1 as identified on Attachment 5-1.

Parcel 1 is identified as State Proposed/State Acquired and will be acquired by GDOT no later than August 1, 2019.

5.2 Administrative Requirements

No requirements.

5.3 Design Requirements

No requirements.

6 UTILITY ADJUSTMENTS

6.1 General

By Georgia Statutes, Utilities, whether publicly or privately owned, aerial or underground, are permitted by GDOT to be accommodated within the ROW. To this end, make every effort to avoid Utilities. Design/construction techniques that minimize or avoid Utility conflicts may involve increased upfront costs; however, those costs may be offset by savings during construction, in addition to the total cost savings for the Project, GDOT, and the respective Utility Owners. This Section 6 establishes procedures and requirements for Utility Adjustments including such processes as coordination with Utility Owners, administration of engineering, construction, other activities necessary for Utility Adjustments and required documentation.

6.2 Administrative Requirements

6.2.1 Standards

Provide Utility coordination and Utility adjustment activities in accordance with GDOT's Utility Accommodation Policy and Standards, current edition, AASHTO's A Guide for Accommodating Utilities within Highway Right of Way, AASHTO's A Policy on Geometric Design of Highways and Streets, TRB's Policies for Accommodation of Utilities on Highway Rights-of-Way, Attachment 3-1 (Manuals), Attachment 6-1 (Supplemental Specification 107–Legal Relations and Responsibility to the Public), and other provisions of the DB Documents.

6.2.2 Communications

6.2.2.1 Communication with Utility Owners: Meetings and Correspondence

Hold meetings and otherwise communicate with each Utility Owner, Subcontractor, Utility Owner's pre-approved design consultant, and Utility Owner's construction contractor as necessary to efficiently accomplish the Utility Adjustments in compliance with the DB Documents. GDOT may participate in these meetings if requested by the Utility Owner or the DB Team or otherwise as GDOT deems appropriate.

Provide a notice and an agenda for the meeting separately to GDOT and the appropriate Utility Owner at least seven days in advance of each scheduled meeting. Prepare and distribute minutes of all meetings within seven days of the meeting with Utility Owners and keep copies of all correspondence with any Utility Owner.

Coordinate with Utility Companies for early coordination of Utility Adjustments.

6.2.2.2 Real Property Matters

GDOT will determine the ROW required for construction of the Project and will endeavor to provide adequate ROW for the existing or typical Utility facilities that will be permitted to be accommodated within that ROW. Services must be performed in accordance with Section 7 (ROW Additional Properties).

Provide the services described below in connection with existing and future occupancy of property by Utilities.

1. **Determination of Utility Right-of-Way and Easement**: The determination as to the need for replacement right-of-way or easement for Utilities will be made as follows:
   a. If additional right-of-way or easement will be required for the construction of the Project, coordinate with the Utility Owner to verify such circumstances and obtain a written statement as to whether the Utility Owner desires that the DB Team acquire such additional right-of-way or easement or the Utility Owner plans to acquire its own right-of-way or easement.
2. **Interest to be Acquired**: If the Utility Owner agrees for the DB Team to acquire replacement right-of-way or easement, step (a) must be followed. If Utility Owner intends to acquire its own right-of-way or easement step (b) must be followed.
   a. If the Utility Owner agrees for the DB Team to acquire replacement right-of-way or easement:
      i. Recommend to GDOT what interest will be required and the instrument (i.e., deed, quitclaim deed, easement limited agreement, etc.) to be used to acquire and/or transfer such interests. The recommendation must be reviewed, and concurrence provided by GDOT.
      ii. An Easement Limited Agreement (ELA) may be utilized to transfer rights in accordance with UAM 4.2.F.2 and as determined by GDOT. GDOT will be responsible for the establishment of the ELA with the Utility Owner.
      iii. If the DB Team is unable to acquire the needed right of way or easement and request assistance from GDOT to acquire the needed right of way or easement, the DB Team will be required to reimburse GDOT for the costs in acquiring the right of way or easement. There will be no schedule relief for the DB Team if this occurs.
   b. If the Utility Owner intends to acquire its own ROW or easement:
      i. Obtain written notification from the Utility Owner of such a decision and include this in a Utility Owner's Work Plan.
      ii. Notify the GDOT Project Manager of said decision and provide a copy of the Utility Owner's Work Plan to GDOT.
3. **Methods of Acquisition**: The method of acquisition described in Section 4.1.C.6 of the UAM will apply.
   a. Adjustment on Projects:
      i. **Reimbursable Cases**: When the Utility Owner is entitled to reimbursement for the cost of acquisition of replacement right of way or easements, GDOT will request permission from the Utility Owner, which must be obtained in writing, to acquire necessary Utility right of way or easements concurrently with State Proposes State Acquired acquisitions. If the Utility Owner has some particular reason for insisting on acquiring the right of way or easement, this will be included in the Standard Utility Agreement.
      ii. **Non-Reimbursable Cases**: If the cost of acquisition of replacement right of way or easement is not reimbursable, GDOT will, at the written request of the Utility Owner, acquire such right of way or easement under written agreement and the Utility Owner will reimburse GDOT for such cost in accordance with State Law.

Any acquisition by GDOT will comply with all requirements pertaining to GDOT's acquisition of its own right of way and easement.

6.2.2.3 Documentation of Existing Utility Property Interests – Affidavits

For each Existing Utility Property Interest within the Existing Right of Way or Proposed Right of Way claimed by any Utility Owner, include an easement deed or an Affidavit of Property Interest in the applicable Utility Work Plan, with appropriate documentation of the Existing Utility Interest attached. Any such claim shall be subject to GDOT's acceptance as part of the Utility Work Plan review. Except as otherwise directed by GDOT, prepare all Affidavits of Property Interest using the standard GDOT form.

6.2.2.4 Acquisition of Replacement Utility Property Interests

Each Utility Owner will be responsible for acquiring any Replacement Utility Property Interests necessary for its Utility Adjustments if the DB Team is not responsible as outlined in the MOU. For acquisitions that are not the responsibility of the DB Team, the DB Team shall have the following responsibilities:

1. Coordinate with, and provide the information to, each Utility Owner as necessary for the Utility Owner to acquire any Replacement Utility Property Interests required for its Utility Adjustments.
2. If any of the DB Team-Related Entities assists a Utility Owner in acquiring a Replacement Utility Project Interest, such assistance shall be by separate contract, and the DB Team shall ensure that the following requirements are met:
   a. The files and records must be kept separate and apart from all acquisition files and records for the Proposed Right of Way and Additional Properties on the Project.
   b. The items used in acquisition of Replacement Utility Property Interests (e.g., appraisals, written evaluations and owner contact reports) must be separate from the purchase of the Proposed Right of Way and Additional Properties on the Project.
   c. Any DB Team Related Entity personnel negotiating the acquisition of Replacement Utility Property Interests must be different from those negotiating the acquisition of Project Right of Way.

The DB Team is not responsible for Utility Owner condemnation proceedings.

6.2.2.4.1 Georgia Utility Permitting System (GUPS)

Submit, or ensure that each Utility Owner submits, Utility permit requests through GUPS for the following:

1. Each Utility proposed to be relocated or installed within the Existing ROW, Proposed ROW and Additional Properties.
2. Each Utility proposed to remain in its existing location within the Existing ROW, Proposed ROW and Additional Properties.

6.2.2.4.2 Documentation Requirements

Prepare, negotiate (to the extent permitted by Section 6.2.2.2 (Real Property Matters), and obtain execution by the Utility Owner (and record in the appropriate jurisdiction, if applicable) all agreements and deeds described in this section, including all necessary exhibits and information concerning the Project (e.g., reports, Plans, and surveys). Each agreement or deed will identify the subject Utility or Utilities by the applicable Utility Permit Number, and identify any real property interests by parcel number or highway station number, or by other identification acceptable to GDOT.

6.2.2.4.3 Record Keeping

Maintain design, construction and inspection, and other Utility related records to ascertain that Utility Adjustment Work is accomplished as required by the Design-Build Documents and the applicable Utility agreements.

6.3 Design Requirements

6.3.1 Memorandum of Understanding (MOU)

The allocation of responsibility for the Utility Adjustment work will be specified in the MOU.

GDOT has executed MOUs between GDOT and each Utility Owner. Copies of the MOUs can be found in the attachments. If a Utility is impacted by the Project and the impact requires a relocation of the Utility, refer to the executed MOU for the Party responsible for the cost of the relocations.

Ensure Utility Adjustments will occur either by coordinating the relocation with the Utility Owner self-performing the relocation work, performing the work with its own forces or by using the Utility Owner's Pre-Approved Design Consultants or Contractors. See Attachment 6-2 (Memorandums of Understanding) for requirements related to coordination and relocations for all Utility owners within the Project Limits, including the relocation of a USGS stream gage

6.3.2 Responsibilities of the DB Team

Ensure all Utility Adjustments necessary to accommodate the Project.

6.3.2.1 DB Team Pre-Construction Coordination

Communicate, cooperate, and coordinate with GDOT, the Utility Owners, Utility Owner's design consultants and construction contractors, property owners, local Governmental Entities, locally impacted businesses, and potentially affected third parties, as necessary for performance of the Utility Adjustment Work. Provide advance notification to all impacted local Governmental Entities, business and property owners for and planned disruption of service. Coordinate with GDOT for any public outreach for planned Utility disruptions as required. The DB Team is responsible for assisting in the preparation of all Standard Utility Agreements (SUA) and Contract Item Agreements (CIA) as required. Utility agreement templates can be acquired from the State Pre-Construction Utility Manager. As part of the Pre-construction coordination, the DB team is required to coordinate with all Utility permitting agencies within the Project limits to ensure that any Utility permits issued by any agency are reviewed and approved by the DB

Team. Notify the Utility Owners that a Georgia Utility Permitting System (GUPS) permit is required for any facilities located inside the Project limits.

Perform all Utility coordination to GDOT standards by a prequalified firm in Area Class 3.10 - Utility Coordination. Refer to the following website for a list of current prequalified firms:

http://www.dot.ga.gov/PS/Business/Prequalification/PrequalConsultants

Include the following in Utility coordination:

1. Schedule and meet with the following for a Utility kick-off meeting within 15 Calendar Days of NTP 1: (a) all Utility Owners with facilities located within the Project limits; (b) GDOT's District Utilities Office; and (c) the State Subsurface Utilities Engineer (or designee). Discuss schedule, provide a Project overview, and provide Utility Owners with a clear understanding of Design-Build Utility Coordination processes and what the Utility Owners can expect for the duration of the Project.
2. Contact each Utility Owner to advise of the proposed Project, and obtain supplemental verification of the locations of existing Utility facilities (including the employment of additional Overhead/Underground Subsurface Utility Engineering (SUE) investigations as needed in determining requirements for the relocation or adjustment of facilities.
3. Perform all coordination necessary for Utility Adjustments.

6.3.2.2 DB Team Design Activities

The DB Team is responsible for the following design activities:

1. Collect the following from each Utility Owner self-performing their relocation work within the Project limits: Utility relocation plans; Utility agreements if required; and cost estimates and letters of no conflict where the Utility Owner's facilities will not be impacted by the Project.
2. Prepare all engineering design, plans, and technical specifications required to perform the necessary Utility relocations.
3. Coordinate the design work of Subcontractors, Utility Owners, and/or Utility Owners' contractors; including any required inspection, permitting, testing, and monitoring to ensure that the Work is properly performed in accordance with approved design plans.
4. The resolution of any conflicts between Utilities and the construction of the Project.
5. No additional compensation will be allowed for any delays, inconveniences, or damage sustained by the DB Team or its Subcontractors due to interference from Utilities or the operation of relocating Utilities.
6. Provide each Utility Owner with roadway design plans and preliminary Utility plans as soon as the plans have reached a level of completeness adequate to allow the Utility Owner to fully understand the Project impacts.
7. Assist Utility Owners in the preparation and submittal to GDOT a Utility Work Plan Retention Request for any Utility that is to remain under the roadway within the construction limits.

8. If a party other than the Utility Owner prepares Utility relocation plans, provide a concurrence box on the plans where the Utility Owner signs and accepts the Utility relocation plans as shown.
9. Review the Utility plans to identify that there are no conflicts with the Project, and ensure that there are no conflicts between each of the Utility Owner's relocation plans.
10. Show all existing and proposed Utilities on the cross-sections and drainage profiles.
11. Furnish the final Utility relocation plans to each Utility owner to incorporate into the GUPS Project permit. Once the GUPS Project permit is submitted, GDOT will forward to the DB Team for concurrence.
12. Review all Utility relocation plans, Utility agreements, Utility estimates, and certificates of eligibility to ensure that relocations comply with GDOT's UAM.
13. Certify to GDOT that Utility relocation design plans have been reviewed and accepted by the respective Utility Owner.

6.3.2.3 Delays

Under no circumstances will the DB Team be entitled to any additional compensation or time extension hereunder as the result of any Utility Adjustment, whether performed by the DB Team or by the Utility Owner, except as provided in Article 14 of the DBA.

6.3.3 General Responsibilities of GDOT

GDOT will provide guidance to the DB Team in the Utility Adjustment process to the extent as described in the Design-Build Documents and the Utility Accommodation Policy and Standards Manual.

6.3.4 Utility Adjustment Relocation

The DB Team is responsible for all Utility Adjustment Work associated with the Project, with the exception of items explicitly excluded within the MOU's.

6.3.5 When Utility Adjustment is Required

Utility Adjustment may be necessary to accommodate the Work for either or both of the following reasons: (i) a physical conflict between the Work and the Utility, and/or (ii) an incompatibility between the Work and the Utility, even though there may be no physical conflict. The physical limits of all Utility Adjustments will extend as necessary to replace the existing Utility, whether inside or outside of the Existing ROW and Proposed ROW. Section 6.2.2.4 (Acquisition of Replacement Utility Property Interests) contains provisions that address the acquisition of easements for Utilities to be installed outside of the Existing ROW and Proposed ROW.

6.3.6 Certain Components of the Utility Adjustment Work

6.3.6.1 Betterments

Replacements for existing Utilities will be designed and constructed to provide service at least equal to that offered by the existing Utilities, unless the Utility Owner specifies a lesser

replacement or unless a larger size is required to meet current Law, industry standards, or Code. Services include equal access and ability to maintain the facility at its current level of functionality; in other words, like for like in-kind replacement and in accordance with the UAM and GDOT Design Policies.

Any Betterment work furnished or performed by the DB Team as part of a Utility Adjustment will be deemed added to the Work. That proportion of the costs representing improvement or Betterment in a facility will be excluded from the costs eligible for payment by the DB Team or participation by GDOT, unless required to meet Law, industry standards, or Code.

Pay the in-kind replacement costs or larger facility costs if required to meet current Law, industry standards, or Code for removing, adjusting, and relocating those facilities that are physically in place and in conflict with proposed construction and where replacement is necessary.

6.3.6.2 Protection in Place

Assist the Utility Owner in the submission of Retention Request to GDOT for review and acceptance for each Utility that will remain in place in accordance with GDOT's Utility Accommodation Policy and Standards Manual. The DB Team is responsible for Protection in Place using a GDOT approved Utility Work Plan Retention Request of all Utilities impacted by the Project as necessary for their continued safe operation and structural integrity.

6.3.6.3 Early Adjustments

6.3.7 DB Team's Responsibility for Utility Identification

All Design Documents for Utility Adjustment Work, whether furnished by the DB Team, or by the Utility Owner or pre-approved design consultant, must be consistent and compatible with the following:

1. The applicable requirements of the DB Documents, including Section 6.2.1 (Standards)
2. Any Utilities remaining in, or being installed in, the same vicinity
3. All applicable Governmental Approvals
4. Private approvals of any third parties necessary for such work

Ensure that the Design Documents are complete and include all Utility adjustment schedules (required only if the Utility Owner self performs), Utility relocation plans, and associated agreements (if required) necessary to address all foreseeable Utility impacts that might affect the Project. This includes Utility issues affecting ROW acquisition, environmental clearances, Project staging, and Project constructability.

Endeavor to design the Project to avoid conflicts with Utilities when feasible and minimize impacts where conflicts cannot be avoided. Submit to GDOT a SUE Utility Impact Analysis (UIA) in GDOT's prescribed format as specified in Section 3, Table 3-1.

Research and verify any compensable prior right claimed in the MOU that would result in reimbursement to the Utility Owner for any relocation design, construction or material cost when a Utility Owner claims prior rights in the MOU and does not include either design or construction

in the Design-Build Documents. If there is a dispute over property interests with a Utility Owner, The DB Team is responsible for resolving the dispute. Meet with GDOT's District Utilities Manager to present the property interests information gathered. This information must be sufficient for the District Utilities Manager (or designee) to certify the extent of the Utility Owner's property interests. GDOT has final approval authority as to the DB Team's determination of whether the Utility Owner has property interests. The DB Team is responsible for all design, construction and material costs when the design and construction are included in the Design-Build Documents.

6.3.8 Utility Relocation Plans

6.3.8.1 Plans Prepared by the DB Team

Where the DB Team and the Utility Owner have agreed that the DB Team will furnish a Utility Adjustment design, prepare final Utility Relocation Plans and have an authorized representative of the Utility Owner sign the plans as “reviewed and approved for construction.” Attach the Utility Work Plan (as approved by the Utility Owner) to the applicable Utility Agreement (if required) for GDOT’s approval.

Unless otherwise specified in the applicable Utility Agreements, all changes to final Utility Relocation Plans previously approved by the Utility Owner (excluding estimates, if the Utility Owner is not responsible for any costs) require written Utility Owner approval. Transmit any GDOT comments to the Utility Owner, and coordinate any modification, re-approval by the Utility Owner, and re-submittal to GDOT as necessary to obtain GDOT's approval.

6.3.8.2 Plans Prepared by the Utility Owner

Coordinate with the Utility Owner as necessary to confirm compliance with the applicable requirements for all Utility Adjustments to be furnished by a Utility Owner. Attach those Utility Adjustments to the applicable Utility Agreement (if required), and include them in the appropriate Utility Work Plan for GDOT’s acceptance. Transmit any GDOT comments to the Utility Owner, and coordinate any modification, review by the DB Team, and re-submittal to GDOT as necessary to obtain GDOT’s acceptance.

6.3.8.3 Design Documents

Each proposed Utility Adjustment must be shown in the Design Documents, regardless of whether the Utility Relocation Plan is prepared by the DB Team, Utility Owner or Utility Owner’s pre-approved design consultant.

Required Information

1. Preliminary Utility Relocation Plans:
    a. Preliminary Utility Relocation Plan sheets are typically comprised of preliminary roadway plan sheets with the inclusion of all existing Utility facility locations (overhead and underground) found within a Project’s limits. The degree of effort exerted on the part of GDOT and the Utility Owner varies with the type and location of the Utility. GDOT has classified these degrees of effort into different quality levels of SUE information.

b. Produce and use Preliminary Utility Relocation Plans in the Utility coordination/relocation design activities outlined here. The following minimum information must be shown on the Preliminary Utility Plans:
   i. Construction centerlines with Project stations and begin/end Project limits
   ii. Curb and gutter or edge of pavement (proposed and existing)
   iii. Road and street names
   iv. Existing and required ROW limits, property lines, environmentally sensitive area limits, and property owners
   v. All proposed and existing easements (including existing Utility easements)
   vi. Proposed and existing drainage structures/features (excluding drainage text)
   vii. Proposed construction limits (C/F lines)
   viii. Topographical planimetrics (i.e., existing buildings/structures, existing tree/vegetation limits)
   ix. All proposed bridges, walls, other structures and landscape hardscapes
   x. All proposed and existing strain poles (signal, sign, lighting)
   xi. Utilities Legend
   xii. Miscellaneous General Notes
   xiii. Existing overhead and underground Utilities found within the Project's limits, including size and material if known
   xiv. Sanitary sewer manhole top, and invert elevations. Sanitary Sewer pipe flow directions
   xv. Railroad mainline and spur tracks with their respective property/easement limits
   xvi. Project survey control point locations

2. Final Utility Relocation Plans
   a. The final Utility Relocation Plans must clearly show all existing Utilities on the plans and clearly indicate all existing Utilities to remain and all proposed relocations necessary to avoid construction conflicts.
   b. In addition to the information required for the Preliminary Utility Relocation Plans, the final Utility Relocation Plans must include Miscellaneous General Notes required for coordination of Utility facilities with roadway construction.

Sheet Layout

1. Remove any information and graphic data that is not necessary to depict the disposition of Utilities found within the Project's limits by turning off the appropriate CAD levels on which the data is stored. This will help ensure that information pertinent to Utility facilities can be clearly seen in the Utility Plan sheets. Examples of extraneous information would be items such as horizontal curve data, superelevation data, roadway dimensions, misc. text, etc. Ensure all background information such as pavement limits, existing structures, etc. is screened back, and ensure all text, line work, details, and symbols are clear and legible when plans are reduced to half-size (typically, 11-by-17 inches).
2. To maintain plan clarity, all applicable general notes, tables, details, and the Utility Legend must be placed separately from the Utility Plan sheets. Provide a Utility Plan Cover Sheet for both preliminary and final Utility Relocation Plans. A recommended example Utility sheet schedule is provided below:

a. Utility Sheet 1 (Cover Sheet) – Utility General Notes, Utility Legend, Miscellaneous Details
b. Utility Sheet 2 (required as needed) – Additional Miscellaneous Details, Pole Data Table
c. Utility Plan Sheets – Display Utilities shown in plan view with respect to Project on 24 Series Plan Sheets.
d. Utility Profile and Cross-Sections Sheets - Proposed Utility facility profiles and cross-sections (as required)
e. Miscellaneous Utilities Sheets – Miscellaneous proposed Utility details (as required)

Follow the above sheet schedule for all separate Utility relocation plans (i.e., water and sewer plans) included in the Project plans.

Note on the Utility Relocation Plans whose responsibility it is for Utility adjustment. Ensure the plans have made accommodations for Utility crossings and attachments for bridge plans, if applicable. Include the size, weight, and type of Utility for any new Utility crossings requests. In addition, fully detail the method of attachment to the bridge. Review such requests to ensure adequacy and constructability and obtain final acceptance from GDOT. Follow the approval process within this specification. Ensure that all proposed and existing Utilities are coordinated with the respective Project's Construction Staging Plans and Erosion Control Plans.

Address any additional environmental impacts due to Utilities in the Project's Environmental Document and/or Permit upon completion of the Utility relocation plans.

6.3.8.4 Certain Requirements for Underground Utilities

Use casing as specified in the Utility Accommodation Policy and Standards Manual for all underground Utilities crossing the Existing ROW, Proposed ROW and/or Additional Properties.

The Worksite Utility Coordination Supervisor (WUCS) shall ensure compliance with all Georgia 811 requirements.

6.3.8.5 Utility Work Plan

Utility Work Plan means the combination of the Utility Relocation Plans and the Utility Adjustment Schedule (if required), and any required agreements, specifications, cost estimates (if required), and any other information and materials which the Design-Build Team is required to submit to GDOT in connection with each Utility Relocation. The Utility Work Plan also includes the Utility Owner's approval of plans, specifications, GUPS project permit, and cost estimates (if required). The term Utility Work Plan also refers to Supplemental Utility Work Plans and Utility Work Plan Retention Requests.

Prepare a Utility Work Plan that addresses each Utility Adjustment (as well as each Utility remaining in place and not requiring any Protection in Place or other Utility Adjustment) and submit it to GDOT for its review and acceptance. Provide Utility Work Plans for each individual Utility Owner in accordance with the Utility Accommodations Policy and Standards Manual. Coordinate preparation of all components of each Utility Work Plan with the Utility Owner or Utility Owner's design consultant. Complete the review and comment process for the applicable

Utility Work Plan, including the issuance of any required GDOT acceptances, before the start of construction for the affected Utility Adjustment Work.

Provisions governing the procedure for and timing of Utility Work Plan submittals are in Section 6.5.

Address all Utility Adjustments covered by the same initial Utility Agreement in a single full Utility Work Plan.

6.3.8.6 Utility Adjustment Schedule (UAS)

The purpose of the UAS is to provide the DB Team with the pertinent information when Utility Owners are self-performing. When the DB Team is performing the relocation work or if the relocation work has been included in the contract to be accomplished by the Utility Owner pre-approved contractor, no UAS will be required, unless there is a dependent activity by the Utility Owner to facilitate this work.

Schedule all Utility relocations, adjustments, and obtain a written schedule from the Utility Owner or a Utility Owner pre-approved contractor.

6.3.8.7 Revised Work Plan Acceptance

Obtain a revised Utility Work Plan from the Utility (if self-performing) within 30 days after becoming aware of, or upon receipt of written notification of, previously unforeseen Utility removal, relocation, or adjustment found necessary by either the DB Team or the Utility after the start of construction of the Project.

The incorporation of this revised Utility Work Plan into the overall Project Schedule is not intended to correct errors and omissions with the original or current accepted Utility Work Plans submitted to GDOT. If such errors or omissions occur, it is the Utility's responsibility to adhere to the original or current Utility Work Plan submitted and approved. However, when a revised Utility Work Plan is deemed appropriate to be submitted, use the following procedure for its acceptance:

1. Review all revised Utility Work Plans submitted by the Utility found within the Project limits.
2. Submit the revised Work Plan after review and acceptance, to GDOT for review and acceptance. If, upon review, GDOT determines a revised Work Plan is unreasonable based on the required scope of Utility Adjustment and/or relocation required to accommodate the Project, GDOT will initiate the escalation process to resolve such disputes involving the revised Utility Work Plan, if disputes occur.

6.3.8.8 Post-Let Utility Certification

Develop the Preliminary Utility Status Report. Include a listing of all Utility Owners located within the Project limits and a recommendation as to the extent of each Utility Owner's property interests. Include copies of easements, plans, or other supporting documentation that substantiates any property interests of the Utility Owners in the report. Ensure the report lists

each Utility Owner with contact information, any Utility Agreements, current UIA, and a preliminary assessment of the impact to each Utility Owner.

Upon receipt of the accepted Utility relocation plans and the Preliminary Utility Status Report review and forward that information to GDOT for review. GDOT will review the information and will perform the post-let Utility certification and issue notice to proceed (NTP 3) released for construction.

6.4 Construction Requirements

6.4.1 Reserved

6.4.2 General Construction Criteria

Notify GDOT that the Project has reached Substantial Completion and certify at that time that all Utilities have been identified, and that those Utility Owners with property interests or other claims related to relocation or coordination with the Project have been relocated or their claims otherwise satisfied or will be satisfied.

In addition to the above, comply with all provisions set forth under subsection 107.21 of the GDOT Standard Specifications, Construction of Transportation Systems, current edition.

Ensure all Utility Adjustment construction performed by the DB Team conforms to the requirements listed below. All construction engineering and contract supervision is the responsibility of the DB Team. Ensure that all Utility relocation work included in the contract is accomplished in accordance with the Contract Special Provisions, MOU and the Utility Owner approved final design plans and specifications. Consult with the Utility Owner before authorizing any changes that affect the Utility Owners facilities. For Work included in the DB Team's Contract, the Utility Owner or Utility Owner's contractor has the right to visit and inspect the work at any time and advise the DB Team and GDOT of any observed discrepancies or potential issues. Notify the Utility Owner when all Utility relocation work is completed and ready for final inspection and acceptance. The DB Team is responsible for verifying that all Utility Adjustment construction performed by each Utility Owner conforms to the requirements described below. In case of nonconformance, the DB Team will cause the Utility Owner (and/or its contractors, as applicable) to complete all necessary corrective work or to otherwise take such steps as are necessary to conform to these requirements:

1. All criteria identified in Section 6.3
2. The Utility Work Plans approved by GDOT (other than Utility Adjustment Field Modifications complying with Section 6.4)
3. All safety and environmental requirements
4. Overall Project Schedule or proposed ROW schedule described in Sections 2, 5 and 7
5. Ensure that the installed, abandoned, excavated, or relocated Utilities within the Project limits are all locatable. Locatable means that the line can be field located using SUE QL-B methodology

The DB Team is responsible for performing all Utility installation, removal, relocation, and adjustments required to accommodate the proposed Project in accordance with the MOU and any required Utility Agreements. This includes any required inspection, permitting, testing, and monitoring to ensure that all the work is properly performed to the approved design plans. The resolution of any conflicts between Utilities and the construction of the Project is be the responsibility of the DB Team. No additional compensation will be allowed for any delays, inconveniences, or damage sustained by the DB Team or its Subcontractors due to interference from Utilities or the operation of relocating Utilities.

6.4.3 Construction Activities

Ensure Utility Adjustments are performed either by the Utility Owner, the Utility Owner's pre-approved contractors or by self-performing the construction Work.

The DB Team Utility Work construction management will be performed by the Worksite Utility Coordination Supervisor.

6.4.4 Inspection of Utility Owner Construction

Set forth procedures for inspection of all Utility Adjustment Work performed by Utility Owners (and/or their pre-approved contractors) to verify compliance with the applicable requirements described in Section 6.4.2 and to ensure the work is being accomplished in accordance with the GDOT approved Utility Relocation Plan.

6.4.5 Scheduling Utility Adjustment Work

The Utility Adjustment Work (other than construction) may begin at any time following issuance of NTP 1. Refer to Article 7.6.2 of the Agreement for the conditions to commencement of Utility Adjustment Construction Work by the DB Team. Do not arrange for any Utility Owner to begin any demolition, removal, or other construction Work for any Utility Adjustment until all the following conditions are satisfied:

1. The Utility Adjustment is covered by an executed Utility Agreement (if required) (and any conditions to commencement of such activities that are included in the Utility Agreement have been satisfied).
2. Availability and access to affected Replacement Utility Property Interests have been obtained by the Utility Owner (and provided to the DB Team, if applicable).
3. Proposed ROW and/or Additional Properties have been obtained in accordance with the applicable requirements of the DB Documents.
4. The review and comment process has been completed and required approvals have been obtained for the Utility Work Plan covering the Utility Adjustment.
5. All third-party approvals (such as railroad, governmental, etc.) necessary for the Utility Adjustment construction have been obtained, and any pre-construction requirements contained in those approvals have been satisfied.

All other conditions to that Work stated in the DB Documents have been satisfied.

6.4.6 Standard of Care Regarding Utilities

Carefully and skillfully carry out all Work impacting Utilities and mark, support, secure, exercise care, and otherwise act to avoid damage to Utilities in accordance with O.C.G.A. 25-9 (The Georgia Utility Facility Protection Act). At the completion of the Work, ensure the condition of all Utilities is at least as safe and permanent as before.

6.4.7 Emergency Procedures

The WUCS shall prepare and submit to GDOT an Emergency Utility Response Plan (EURP) at least 30 days prior to NTP 3. The EURP shall indicate the Project location (which includes street address and or major intersections / major highway route, if possible with a land mark) that would be reported in case of an emergency, WUCS, Emergency Utility Coordinator (EUC), Utility company name, Utility company emergency contact information to include emergency phone number, response time for emergency, working condition of devices needed to facilitate prompt shut off, and primary point of contact name and phone number for the Project.

The Emergency Utility Coordinator (EUC) must be an employee of the DB Team and is responsible for notifying the appropriate Utility company and/or Utility subcontractors in case of an emergency. EURP must include the contact details of the EUC, if WUCS is not the primary emergency Utility coordinator for this Project.

The plan will also include a means of reporting emergencies and the Utility Emergency Response Information for each company. Post the EURP in an area readily accessible to GDOT and Project personnel. Distribute the copies of EURP by e-mail and hard copy to GDOT, DB Team's Project Manager, superintendent, and all approved Subcontractors whose work can be in conflict with Utility facilities, and personnel of each facility/owner/operator who has facilities within the Project limits. Keep a copy in close proximity to active construction.

In the event of interruption to gas, water, or other Utility services as a result of accidental breakage or as a result of being exposed or unsupported, promptly notify the appropriate emergency officials, the Georgia Utilities Protection Center, and the appropriate Utility facility company or operator, if known. Do not engage in excavating or blasting activities that may cause further damage to the Utility facility until the damage has been repaired.

Include an item in the agenda of Utility Coordination meeting about the updates/changes in the EURP plan to ensure the contact information provided in the EURP (name and phone numbers) is kept up-to-date.

The Emergency Utility Response Plan and Emergency Utility Response Information template can be found at the State of Georgia, Office of Utilities Webpage.

6.4.8 Switch Over to New Facilities

After a newly adjusted, relocated or installed Utility has been accepted by the Utility Owner and is otherwise ready to be placed in service, coordinate with the Utility Owner regarding the procedure and timing for placing the newly adjusted Utility into service and terminating service at the Utility being replaced.

6.4.9 Traffic Control

The DB Team is responsible for, and the Construction Traffic Control Plan will cover, all traffic control made necessary for Utility Adjustment Work, whether performed by the DB Team or by the Utility Owner. Traffic control for Adjustments or installations will be coordinated with GDOT. Traffic control must comply with the guidelines of the Manual on Traffic Control Devices (MUTCD), current edition, and of Section 18.

6.5 Deliverables

Time all Submittals described in this Section 6 to meet the Baseline Project Schedule, considering GDOT's applicable review and response times designated in this Section, or if not stated therein, then as stated in Article 6.3 of the Design-Build Agreement (Volume 1).

Upon GDOT review and acceptance, provide a copy of the accepted final Utility plans to all Utility Owners whose Utility relocation work was performed by the DB Team.

6.5.1 Utility Work Plan Submittals

Transmit any GDOT comments to the Utility Owner, and coordinate any modification, review, and approval by the Utility Owner and re-submittal to GDOT, as necessary to resolve all GDOT comments and/or obtain GDOT's acceptance, as applicable.

6.5.2 Preliminary Utility Status Report

Prepare and submit to GDOT a Preliminary Utility Status Report concurrently with accepted relocated Utility plans in accordance with Section 3.

6.5.3 Subsurface Utility Engineering (SUE) Requirements

Compile and submit to GDOT all SUE deliverables, Utility relocation plans, SUE Utility Impact Analysis, Utility Adjustment Schedules (if required), Utility Agreements (if required), Utility Estimates (if required) (if estimates are provided by the Utility owners), and Letters of no conflict, as set forth above for the Project.

Ensure each Utility Agreement and Utility relocation plan submitted is accompanied by a certification from the DB Team stating that the proposed relocation will not conflict with the proposed highway improvement and will not conflict with another Utility Owner's relocation plan.

6.5.4 Utility As-Built Standard

6.5.4.1 General As-Built Utility Requirements

The DB Team is responsible for managing, ensuring the accuracy of, and delivering all Utility Record Drawings, which must be submitted for intermediate review and approval within 30 days after Utility relocations are completed.

Ensure the following:

1. All underground Utilities that are relocated, adjusted or newly installed within the Project limits will be surveyed by a certified licensed surveyor at the time of installation to determine the exact location and position of the Utility line, including:

a. The outside diameter of pipe or width of duct banks and configuration of either cased or non-encased multi-conduit systems
b. The Utility's structural material composition and condition
c. Identification of benchmarks used to determine elevations
d. All bored in facilities will require bore logs, which is part of the required as-built record information
e. Elevations with an accuracy of +/- 0.05 feet and certified accurate to the benchmarks used to determine elevations
f. Horizontal data accurate to within +/- 0.2 feet or applicable survey standards, whichever is more precise
g. Recording and labeling of the average depth below the surface of each run, all change of direction points, and all surface or underground components such as valves, manholes, drop inlets, clean outs, meters, etc.
    i. For wet facilities – at 100 ft. intervals
    ii. For dry facilities – at 25-50 ft. intervals, depending on the vertical alignment

2. All resulting abandoned or excavated underground Utilities within the Project limits are clearly delineated and labeled as abandoned or removed.
3. All relocated, adjusted and newly installed aerial facilities are recorded to include the following:
    a. Owner
    b. Age
    c. Size
    d. Height
    e. Number
    f. Material type
    g. General condition of the Utility
    h. Horizontal location surveyed to the same accuracies and precision as is required for the topographic data
    i. Aerial Utility Owners attached to the pole
    j. Horizontal connectivity of the Utilities between the poles, including major service drops (substations or industrial facilities)

6.5.4.2 As-Built Utility CADD Files and Plans Preparation

Submit as-built information in GDOT's current CADD format (Microstation and InRoads) and in PDF format in accordance with GDOT's current Electronic Data Guidelines (EDG) and Plan Presentation Guide (PPG).

Ensure the as-built Utility information is submitted as follows:

CADD Files

1. All points/data are placed in one CADD file per Utility Owner.
2. DGN files are named using the naming convention "1234567UTLAB_XYZ.dgn" (where "1234567" represents the PI# and "XYZ" the Owner's UPC code).

3. One empty, overall file using the naming convention "1234567UTLEAB.dgn" is created with all individual files named "1234567UTLAB_XYZ.dgn" attached as reference files.
4. All UTLAB files follow the conventions set forth in the EDG for the UTLE file.
5. Sheet files, using GDOT's title block, are created for each Utility Owner in accordance with Section 24, and Section 44 (if required) of GDOT's PPG; levels are correctly turned on/off/grayed back to enable future printing if needed.
6. The Project's scale is maintained.
7. Relocated poles are numbered and matched to a pole data table.
8. Pole data tables and point data tables are included.
9. All street names are labeled.
10. All easements and ROW are labeled.
11. The location and elevation of the referenced benchmark is identified and labeled; if the referenced benchmark is not within the Project limits, then a complete description of its location will be provided to assist in future locating.
12. Any changes in details of design and/or additional supporting information, such as approved placement details, pipe sizes, material changes, geo-coded photos, etc., are be labeled.

PDF Files

1. Create PDFs of the CADD sheet files for each Utility Owner in accordance with Section 24, and Section 44 (if required) of the GDOT PPG; levels must be correctly turned on/off/grayed back to enable future printing.
2. Include the name, address, and telephone number of the firm preparing the drawing in the title block.
3. Include the date the as-built data is collected in the revision block of the title block.
4. Include the Professional Surveyor's or Professional Engineer's stamp and statement certifying that Record Drawings reflect the true conditions in the field.
   a. An electronic stamp may be used.
   b. Certification applies to new as-built information (not to the existing Utility information) provided by GDOT.
5. Provide the Contractors' statement (with an original signature and Project Number on the cover sheet and transmittal letter) verifying that all construction specifications and product qualities have been met.
6. Label "Record Drawing" on each sheet.

6.5.4.3 Utility Record Drawings Review and Submittal Process

1. Submit completed as-built CADD files and PDFs of the Record Drawings Utility plan sheets to the DB Team's EOR for review and comments.
2. Record Drawings are not considered complete until the DB Team has responded to all comments from these reviews to the satisfaction of the DB Team's EOR.

3. Prior to submitting any Utility as-builts to Utility Owners, provide GDOT with one PDF copy of each of the major Utilities (Water/Sewer, Gas, Telecom and Electric) for preliminary review and comment. After comments have been addressed; no further preliminary review will be required.
4. Each Utility Owner, whose facilities were relocated, abandoned, adjusted, or installed will receive a PDF and CADD copy of their Record Drawings for review and acceptance within 90 days of the completed work.
5. Submit the combined final Utility as-built plans to GDOT as follows:
   a. One overall, final CADD file in GDOT's current CADD Software with each Utility Owner's file appropriately attached as a reference file per GDOT's PPG and EDG
   b. One PDF set of Section 24 and Section 44 (if required) plans for each Utility Owner's facilities
6. GDOT will perform Quality Assurance (QA) on all deliverables to determine compliance with GDOT's EDG ad PPG before final acceptance by GDOT.

6.5.4.4 Utility Facility Relocation Acceptance Form

The Utility Facility Relocation Acceptance Form (see Attachment 6-3) shall be completed by the Contractor's WUCS. It must also be signed by an authorized representative of the Utility Owner and by the GDOT Project Manager upon completion and acceptance of the final Utility as-built plans by the Utility Owner.

Execution of the Utility Facility Relocation Acceptance Form by the DB Team, Utility Owner, and GDOT provides acknowledgement that the Utility relocation work accomplished by the DB Team has been visually inspected and accepted by the Utility Owner and constructed in accordance with the Utility Owner approved relocation design plans, their current specifications, and the requirements of the Memorandum of Understanding (MOU) as executed by the Utility Owner. Further, the Contractor's WUCS must provide the Utility Owner with a complete set of Record Drawings (CADD and PDF) reflecting the relocation work performed by the Contractor for review and approval. Upon completion of the Utility Facility Relocation Acceptance Form and the exchange of the final Utility Owner approved Record Drawings, all parties must agree that the Utility Owner will operate and maintain the installed facilities covered by the Utility Facility Relocation Acceptance Form going forward based on the date of execution by the GDOT Project Manager (PM). The DB Team, however, is responsible to correct any items inadvertently overlooked and subsequently identified in a Utility punch list and to provide up to date Record Drawings to the Utility Owner.

Execution of the Utility Facility Relocation Acceptance Form by GDOT does not confer legitimacy and accuracy or in any way transfers liability for errors or omissions made by the preparer.

7 RIGHT OF WAY (ROW) – Additional Properties

7.1 General

No additional property acquisitions will be allowed.

8 GEOTECHNICAL

8.1 General

Perform all geotechnical investigations, testing, research, and analysis necessary to effectively determine and understand the existing surface and subsurface geotechnical conditions. Ensure the geotechnical investigations and analyses are both thorough and complete, so as to provide accurate information for the design of roadways, pavements, foundations, structures, and other facilities that result in a Project that is safe and meets operational standards.

All geotechnical reports, provisions, and recommendations developed by the DB Team and accepted and/or concurred by GDOT will be part of the Project's design and endorsed by the EOR.

8.2 Administrative Requirements

8.2.1 Standards

Construct and maintain roadway pavements in conformance to GDOT's Pavement Design Manual and GDOT policies and procedures.

Perform all other geotechnical Work in general conformance with GDOT's Geotechnical Engineering Manual and guidelines, AASHTO guidelines, and Attachment 3-1 (Manuals), and other provisions of the DB Documents.

8.3 Design Requirements

8.3.1 Subsurface Geotechnical Investigation by the DB Team

Determine the specific locations, frequency, and scope of all subsurface geotechnical investigations, testing, research, and any analysis the DB Team considers necessary to provide a safe and reliable roadway, pavement, foundation, structure, and other facilities for the Project.

Prepare and amend, as needed, Geotechnical Engineering Reports as described later in this Section 8 documenting the assumptions, conditions, and results of the geotechnical investigation and analysis, including the following:

1. The geology of the Project area, including soil and/or rock types, and drainage characteristics.
2. Field investigations and laboratory test results used to characterize engineering and physical properties of soil and rock, including moisture content, plasticity index, gradations for each major soil strata change, levels of shrink/swell potential soil compressibility, and short-term and long-term settlement/ consolidation, strength tests and engineering properties; recording rock recovery and rock quality designation in the field in addition to laboratory tests to determine compressive and split tensile strength tests of rock cores.
3. A discussion of conditions and results with reference to specific locations on the Project, including a dewatering plan and impacts on near-by structures.

4. Design and construction parameters resulting from the geotechnical investigation and analysis, including parameters for the design of pavements, pipes, foundations, structures, slopes, and embankments.
5. Plan view locations of field sampling, profile of boring logs and other field data, laboratory test results, calculations, and analyses that support design decisions taking into consideration down-drag on piles and soil squeeze in high embankments.
6. Include the slope stability analysis for embankment and excavation slopes including both short-term (undrained) and long-term (drained) conditions, and discussion of design measures undertaken to ensure stability and safety of all slopes. Ensure the analysis considers the potential for long-term surficial slide failures common to high plasticity clays in Georgia, and specific recommendations are provided to minimize their occurrence. Internal and external stability analysis shall be considered for walls supporting fill/cut within the Project.

Submit each Geotechnical Engineering Report upon completion, along with back-up of calculations and input and output of GDOT recognized computer software to GDOT for review and comment as a Submittal.

If environmentally-sensitive conditions such as undocumented contaminated soil or archaeological sites are encountered during the subsurface exploration activities, notify GDOT immediately. For hazardous materials, also follow the requirements in Article 7.8 of the DBA and in GDOT Standard Specification 107.22.

8.3.2 Bridge Foundation Investigation (BFI)

Perform a BFI for each bridge in the Project. The BFI report and all recommendations must be reviewed and endorsed by the EOR.

8.3.2.1 Pile Foundation

1. Design and construct the pilings in accordance with all related special provisions per the approved Bridge Foundation Investigation recommendations.
2. All piles must be embedded a minimum of 10 feet into natural ground and 10 feet below 500-year scour line with additional length determined by the lead Professional Engineer for geotechnical design.
3. Piles must have minimum embedment in the following materials:

Table 8-1: Pile Embedment Specifications

Material and Density	Minimum Embedment
15 – to 20 – blow count soil	15 feet
40 – to 50 – plus blow count soil	10 feet
Hard rock (requires pilot holes)	5 feet

4. Pile tips must be set below any soft/loose soils that may settle/consolidate under the design load unless the soft/loose soils are at least deeper than five pile diameters below the pile tip.

5. When piles must penetrate rock to provide the minimum embedment, use pilot holes drilled a minimum of 5 feet into the rock.

8.3.2.2 Drilled Caisson

1. Design and construct the drilled caissons in accordance with Special Provision 524 per the approved Bridge Foundation Investigation recommendations.
2. When sound rock is encountered, drilled caissons must be embedded a minimum of 10 feet into sound rock as defined by Special Provision 524.3 or per the approved Bridge Foundation Investigation (BFI) recommendations.

8.3.2.3 Spread Footings

1. Top of footing must be a minimum of 2 feet below the top of final grade.
2. Spread Footings should bear below the scour line, if applicable.

8.3.3 Dynamic Pile Testing

Perform dynamic pile testing using the Pile Driving Analyzer (PDA) to monitor the driving of piles with accelerometer and strain gauges attached to the piles. Perform a minimum of two PDAs (one for the abutment and one for the intermediate bents), but no less than 2 percent of the production piles, and additional PDAs will be required for a change in bent type, change in abutment, change in geotechnical material, or as determined by the EOR. Perform the dynamic pile testing in accordance with ASTM D4945-08 and Special Provision 523 per the approved Bridge Foundation Investigation recommendations.

Upon completion of a PDA test, provide a complete report consisting of but not limited to PDA field monitoring data, results of Case Pile Wave Analysis Program (CAPWAP) computer analyses, and the driving criteria recommendation from the geotechnical engineer who developed the BFI. The recommendation must be endorsed by the EOR. Submit the report electronically in PDF format and the electronic data files of the PDA analysis and CAPWAP to GDOT and allow seven days for review and acceptance before proceeding with driving production piles.

8.3.4 Soil Survey (SS)

Perform a Soil Survey for all Projects that include the design of roadway foundations, embankments, and the treatments for geotechnical and related problems on the Project in conformance with the GDOT Geotechnical Engineering Manual and Attachment 3-1 Manuals. The EOR shall review and endorse the SS report and all recommendations.

DB Team may choose to accept and use the approved SS report for the Project; however, the document is only provided as a RID and GDOT accepts no liability for the accuracy of the SS report.

8.3.5 Pavement Design

Comply with the required minimum pavement design provided in Section 11 (Roadways).

For roadways adjacent to and crossing the Project that are disturbed by the construction activities of the Project:

1. Match the in-place surface type and structure of the existing roadways at a minimum.
2. Construct all new shoulders as full depth shoulders unless otherwise specified in Volume 2.
3. Design all tie-in Work to avoid differential settlement between the existing and new surfaces.
4. Coordinate the design and construction of all cross roads with the Governmental Entity having jurisdiction whether a municipality, county, or GDOT.

8.3.6 Wall Foundation Investigation (WFI)

Perform a WFI for each wall in the Project that includes wall structures in conformance with the GDOT Geotechnical Engineering Manual, AASHTO guidelines, and Attachment 3-1 for all new walls and wall extensions. The EOR shall endorse the WFI report and all recommendations.

8.3.7 High-Mast Lighting Foundation

No requirements.

8.4 Construction

Ensure that materials used to construct the Project meet the minimum requirement as specified in GDOT specifications, policies and procedures, guidelines, and Attachment 3-1. Ensure all materials used to construct the Project conform to the requirements of the GDOT Qualified Products List (QPL) or equivalent as approved by GDOT. Personnel possessing the requisite GDOT materials certifications will perform testing of materials.

Assume responsibility for obtaining and complying with all Governmental Approvals for construction of the Project.

Submit to GDOT for review and acceptance any blasting plan(s). Perform blasting in accordance with State Law, and in accordance with GDOT's specifications, policies and procedures.

8.5 Deliverables

Refer to Section 3.

9 SURVEYING AND MAPPING

9.1 General

Provide accurate and consistent land surveying and mapping necessary to support ROW acquisition, design, and construction of the Project. The DB Team is responsible for all surveying responsibilities.

Review existing survey data and determine the requirements for updating or extending the existing survey and mapping data. The DB Team is responsible for the final precision, accuracy, and comprehensiveness of all survey and mapping.

9.2 Administrative Requirements

9.2.1 Standards

Provide surveying and mapping activities in accordance with the GDOT Automated Survey Manual and Attachment 3-1 (Manuals), and other provisions of the DB Documents.

9.2.2 Ownership

The documents produced by the DB Team surveyor or the surveyor's subcontractors are the property of GDOT and release of any such document must be approved by GDOT.

9.2.3 Property Owner Notification

Prepare for GDOT review and acceptance a property owner notification letter in accordance with the GDOT Automated Survey Manual prior to entering any private property outside the Existing ROW.

9.3 Design Requirements

9.3.1 Units

Perform all survey Work in U.S survey feet. Ensure the Work conforms to state plane coordinates.

Ensure the combined sea level and scale factor for the Project conforms to the GDOT Automated Survey Manual.

9.3.2 Survey Control Requirements

Ensure that all surveying conforms the Georgia Professional Land Surveying Practices Act, follows the General Rules of Procedures and Practices of the Georgia Board of Professional Engineers and Land Surveying, and otherwise conforms to all applicable Law. Ensure that any person in charge of the survey is proficient in the technical aspects of surveying and is a Professional Land Surveyor (Surveyor).

Establish all horizontal and vertical primary Project control from approved control provided by GDOT. Meet the guidelines as defined in the GDOT Automated Survey Manual if using GPS methods.

Establish and maintain additional survey control as needed and final ROW monumentation throughout the duration of the Project.

Tie any additional horizontal and vertical control for the Project to the established primary Project control network.

Set and/or verify by a Professional Land Surveyor all survey control points.

Establish and maintain a permanent horizontal and vertical primary survey control network. Ensure the control network consists of, at minimum, horizontal deltas coordinated and elevated set in intervisible pairs at spacing of no greater than 1 mile. Install control monuments per the GDOT Automated Survey Manual.

Provide to NOAA, in coordination with GDOT, notification of planned activities that will disturb or destroy any geodetic control monuments at least 90 days prior to construction. This provides time to plan for and execute relocation of geodetic monuments.

Replace all existing horizontal and vertical primary survey control points disturbed or destroyed. Make all survey computations and observations necessary to establish the exact position and elevation of all other control points based on the primary survey control.

Deliver to GDOT a survey control package in accordance with the criteria in the GDOT Automated Survey Manual, as well as a revised survey control package when survey monuments or control points are disturbed, destroyed or found to be in error.

9.3.3 Conventional Method (Horizontal & Vertical)

Meet the accuracy of the appropriate level of survey as defined in the GDOT Automated Survey Manual if using conventional methods to establish additional horizontal control.

9.3.3.1 Horizontal Accuracy Requirements for Conventional Surveys

Horizontal control is to be established on the Georgia State Plane Coordinate System of 1985 [NAD83 or GCS 85], at a minimum.

Upon request, GDOT will compile and provide to the DB Team a survey control package of existing GDOT approved survey monumented data in the Project vicinity.

9.3.3.2 Vertical Accuracy Requirements for Conventional Surveys

Establish vertical control on the North American Vertical Datum of 1988 (NAVD 1988) as shown in Table 9-1.

Table 9-1: North American Vertical Datum of 1988

	1st Order	2nd Order	3rd Order	Remarks and Formulae
Error of Closure	0.013 feet $\sqrt{M}$	0.026 feet $\sqrt{M}$	0.049 feet $\sqrt{M}$	Loop or between control monuments
Maximum Length of Sight	250 feet	300 feet		With good atmospheric conditions
Difference in Foresight and Backsight Distances	±10 feet	±20 feet	±30 feet	Per instrument set up
Total Difference in Foresight and Backsight Distances	±20 feet per second	±50 feet per second	±70 feet per second	Per total section or loop
Recommended Length of Section or Loop	2.0 miles	3.0 miles	4.0 miles	Maximum distance before closing or in loop
Maximum Recommended Distance Between Benchmarks	2000 feet	2500 feet	3000 feet	Permanent or temporary benchmarks set or observed along the route
Level Rod Reading	± 0.001 foot	± 0.001 foot	± 0.001 foot	
Recommended Instruments and Leveling Rods	Automatic or tilting w/ parallel plate micrometer precise rods	Automatic or tilting w/ optical micrometer precise rods	Automatic or quality spirit standard, quality rod	When two or more level rods are used, they should be identically matched
Principal Uses	Broad area control, subsidence or motion studies jig and tool settings	Broad area control, engineering projects basis for subsequent level work	Small area control, drainage studies, some construction and engineering	

9.3.4 Reserved

9.3.5 Right of Way Surveys

Base all surveys on the primary horizontal and vertical control network established for the Project.

9.3.5.1 Accuracy Standard

Ensure the accuracy standards of the appropriate level of survey as defined in the following table are met when performing ROW surveys consisting of boundary locations.

Table 9-2: Chart of Tolerances

	Rural	Urban	Remarks and Formulae
Error of Closure	1:20,000	1:25,000	Loop or between Control Monuments
Adjusted Mathematical Closure of Survey (No Less Than)	1:50,000	1:50,000	

*GDOT policy requires all bearings or angles be based on the following source: Grid bearing of the Georgia Coordinate System of 1985, with the proper zone and epoch specified.

9.3.6 Survey Records and Reports

Use electronic field books to collect and store raw data if necessary. Preserve original raw data and document any changes or corrections made to field data such as station name, height of instrument, or target, as well as raw and corrected field data in hardcopy output forms in a similar manner to conventional field books for preservation.

Record field survey data and sketches that cannot be efficiently recorded in the electronic field volume in a field note volume and store with copies of the electronic data.

Record all field notes in permanently bound books (loose leaf field notes are allowed). Deliver copies of any or all field note volumes to GDOT upon request.

The documents produced by the Surveyor, or the Surveyor's subcontractors, are the property of GDOT, and release of any such document must be approved by GDOT prior to release.

Provide all created topographic mapping to GDOT in digital terrain model format using the software and version thereof being used by GDOT at the time of delivery.

9.4 Construction Requirements

9.4.1 Construction Surveys

Comply with the requirements in Section 9.3.

9.4.2 ROW Monuments

Comply with the requirements in Section 9.3.

Upon completion of the ROW acquisition and all Construction Work, such that the Final ROW monuments are disturbed by construction, set permanent and stable concrete ROW monuments (constructed according to current GDOT specifications) located on the final ROW line at all points of curvature (PCs), points of tangency (PTs), points of intersection (PIs), miters and breaks, points of compound curvature (PCCs), points of reverse curvature (PRCs), and all intersecting crossroad ROW lines.

Set permanent and stable concrete ROW monuments (constructed according to current GDOT specifications) located on all final ROW lines where the distance between such significant ROW line points exceeds 1,500 feet at no more than 1,000-foot intervals.

Purchase all materials, supplies, and other items necessary for proper survey monumentation.

9.4.3 Side-scan Sonar Surveys

Prepare and submit initial (prior to construction activities within the stream) and final (after removal of the existing bridge) bathymetric charts and sonar images of the streambed/lakebed to ensure the removal of the existing bridge and any construction waste or debris is in accordance with the Technical Provisions.

Utilize personnel and equipment necessary to produce bathymetric charts and sonar images capable of distinguishing objects 0.5 cubic feet (0.014 cubic meters) or greater. Use side-scan sonar equipment capable of printing visible sonar recordings/images of the streambed/lakebed. Prior to utilizing a Subcontractor to perform side-scan sonar survey, submit to GDOT the Subcontractor's qualifications and approach for preparing the bathymetric charts of similar size and scope. GDOT will be the sole judge of acceptability and qualifications for the Subcontractor and method/equipment utilized to prepare the bathymetric charts and sonar images. Provide the before and after surveys to the USACE office for review.

1. Prior to commencement of construction activities within the boundaries of the stream/lake, scan the entire Project area from the center of the navigation channel to an appropriate distance shoreward or as directed by GDOT to ensure that no debris is left in the waterway. Submit initial bathymetric chart and side-scan sonar images to GDOT showing disposition of the streambed/lakebed prior to construction activities.
2. After complete removal of the existing bridge and any construction waste or debris, scan the entire Project area using side-scan sonar equipment within the same boundaries stated above or as directed by GDOT. Submit final bathymetric chart and side-scan sonar images to GDOT showing disposition of streambed/lakebed after complete removal. Provide correlation between the initial and final bathymetric charts in order to distinguish changes in the streambed/lakebed as a result of the removal. Continue the removal operations if there are areas where the removal is deemed incomplete by GDOT. Provide subsequent sonar scans with images until the removal operations are complete and accepted by GDOT.

9.5 Deliverables

In addition to those listed in this Section, refer to Section 3.

10 GRADING

10.1 General

Conduct all Work necessary to meet the requirements of grading, including clearing and grubbing; excavation and embankment; removal of existing buildings, pavement, and miscellaneous structures; subgrade preparation and stabilization; dust control; aggregate surfacing; and earth shouldering.

10.2 Administrative Requirements

10.2.1 Standards

Provide grading activities in accordance with Attachment 3-1 (Manuals) and other provisions of the DB Documents.

10.3 Design Requirements

Ensure that all borrow, stockpile, and waste sites for this Project are environmentally approved prior to construction activities occurring in them. Place all common fill or excess material disposed of outside Project Right of Way in either a permitted solid waste facility, a permitted inert waste landfill, or in an engineered fill. See GDOT Standard Specifications Construction of Transportation Systems, Special Provisions, and Supplemental Specifications for additional information.

There is no known suitable place to bury existing bridge/construction debris with the Project limits. Provide an environmentally approved site as shown in Standard Specification 201 to dispose the existing bridge and/or construction debris at no additional cost to GDOT.

Notify GDOT of any non-permitted encroachment in the existing right of way. Do not take any action to remove the encroachment without GDOT approval.

10.3.1 Removal and Disposal of Material

Refer to Section 10.3.

10.3.2 Demolition and Abandonment Plan

Develop, implement, and maintain, for the Term, a Demolition and Abandonment Plan for all existing structures, features, and Utilities including types and sizes, as described in Section 10.4 that will be removed, abandoned or partially abandoned during the Term. Ensure the plan provides that said structures are structurally sound after the abandonment procedure and shows with sufficient detail for the Abandonment the locations of all existing features as listed in Section 10.4.

GDOT reserves the right to require the DB Team, at any time, to salvage equipment and/or material in an undamaged condition and to deliver to a location designated by GDOT within the GDOT District in which the Project is located. GDOT has first right of refusal to retain any salvage material or equipment. Take possession of, but do not reuse for the project, any

material or equipment GDOT decides not to salvage. Ensure all material incorporated into the Project is new.

The material from structures designated for demolition is the DB Team's property. Properly dispose of all material removed outside the limits of the Project.

10.3.3 Slopes and Topsoil

Comply with Attachment 3-1 regarding design limitations and roadside safety guidelines associated with the design of slopes along roadways. Adjust grading to avoid and minimize disturbance to the identified waters of the U.S. Ensure the grading plan is in accordance with the approved Environmental Documents. Secure all associated Governmental Approvals to meet the Released for Construction (RFC) plans.

Perform finished grading and place topsoil in all areas suitable for vegetative slope stabilization (and areas outside the limits of grading that are disturbed during the Work) that are not paved.

Clear the entirety of cut slopes within the available Right of Way and remove debris.

10.3.4 Special Flood Hazard Areas Fill Mitigation

No requirements.

10.4 Construction Requirements

Remove any features that are abandoned in place (e.g., parking lots, abandoned pavements, sidewalks, driveways, catch basins, drop inlets, pipes, manholes, curbing, retaining walls, utilities, foundations, paved floors, underground tanks, fences, bridges, buildings, and other incidental structures to the following depths):

1. **Abandoned pavements**: Obliterate, grade to drain, and grass existing pavement inside the Project that is no longer being used.
2. **Abandoned pipes**: Ensure abandoned pipes that are left in place are grout filled or filled with flowable fill.
3. **Under pavements**: Remove to a depth of at least 3 feet below the finished subgrade elevation.
4. **Underneath other structures**: Remove to at least 3 feet below the foundations of any proposed structure, including installations such as guard rail posts and utility poles.
5. **Elsewhere within the ROW and easement areas, remove as follows**: Remove to at least 3 feet below the finished surface of slopes and shoulders and 1 foot below natural ground outside construction lines.

Thoroughly crack or break abandoned structures that may impound water. These structures include, but are not limited to, concrete floors, basements, catch basins, and other structures within 10 feet of finished grade.

Break floors so that no section greater than 10 square feet remains intact.

10.5 Deliverables

In addition to those listed in this Section, refer to Section 3.

11 ROADWAYS

11.1 General

Coordinate roadway design, construction, maintenance, and operation with all other Work planned or under construction by GDOT and/or Governmental Entity.

11.2 Administrative Requirements

11.2.1 Standards

Provide activities in this section in accordance with GDOT *Standard Specifications, Construction of Transportation Systems*, other Attachment 3-1 (Manuals), and other provisions of the DB Documents.

11.3 Design Requirements

11.3.1 Overview

Coordinate roadway design with the design of all other components of the Project. Design the Project roadways to integrate with streets and roadways that are adjacent or connecting to the Project.

Design the Project roadways to incorporate roadway appurtenances, including fences, noise attenuators, barriers, and hazard protection as necessary to promote safety and to mitigate visual and noise impacts on neighboring properties.

Design and construct any and all proposed intersection reconstruction or rehabilitation to meet the requirements of the Environmental Document Approvals and Attachment 3-1 Manuals.

11.3.2 Design Criteria Order of Precedence

Adhere to the following requirements for the design of the Project. The plans provided in the Reference Information Documents are provided for reference only and may contain or conform to some but not all of the design requirements herein. In the event of any conflict, ambiguity, or inconsistency among the following design criteria, the order of precedence, from highest to lowest, one being higher than two, is as follows:

1. Allowable Design Exceptions, Design Variances, and Design Deviations as set forth in Section 11.3.4
2. Attachments (Technical Provisions)

11.3.3 Typical Sections and Pavement Design

Comply with Attachment 11-1 (Roadway Design Criteria).

Ensure all new pavement for the Project meets, at a minimum, the pavement designs identified in the table(s) in Attachment 11-2 (Pavement Designs).

11.3.3.1 Crossing Streets

Coordinate, design, and construct the improvements on crossing streets in accordance with the requirements of the Governmental Entity having jurisdiction of said roadway.

11.3.3.2 Roadside Safety

Ensure that all roadside safety devices used on the Project meet current crash test and other safety requirements that meet or exceed current GDOT requirements.

11.3.3.3 Pavement Joints

Include in staged construction consideration of using pavement construction widths that don't force the final roadway surface to have longitudinal joints in the wheel path.

Do not design or construct longitudinal pavement joints in the wheel path of the traveling public unless specifically approved by GDOT in writing.

Install high-strength fabric in accordance with GDOT Standard Specifications Section 446 and Attachment 11-3 (Fabric Detail) at all longitudinal joints, transverse joints, and cracks where pavement is to be overlaid.

11.3.3.4 Intersection Reconstruction or Rehabilitation

Design and reconstruct the SR 53 westbound left-turn lane at the Lake Ranch Court intersection, offsetting from the current location.

11.3.3.5 Concrete Usage

Use colored textured concrete in all raised medians when designing and constructing hardscape elements at intersections. Monolithic concrete medians are not permitted. Only use stamped concrete where the DB Teams acquires written agreement, in a manner acceptable to GDOT, from local communities to maintain it, and where it meets the requirements in GDOT specifications, policies, procedures and Attachment 3-1 (Manuals).

Use concrete paving in hard to reach mowing areas or under structures (such as, but not limited to, areas near or next to or between guard fence posts, sign posts, bent columns, next to retaining walls, freeway ramp gores, paved ditches, flumes, ditch inlets, etc.) to improve roadway appearance.

11.3.3.6 Barriers

Remove and upgrade all existing guardrail within the limits of roadway construction that is not otherwise being removed or replaced.

See Attachment 11-1 (Roadway Design Criteria) for additional roadway design requirements.

11.3.4 Allowable Design Exceptions, Design Variances, and Design Deviations

No Design Exceptions or Design Variances are allowed.

Upgrade any existing conditions within the Project limits that do not meet the requirements of either the AASHTO Controlling Criteria or the GDOT Design Policy Manual to meet the Project requirements.

Design Deviations that are present within the existing conditions may be retained. Present any existing Design Deviations that are identified within the Project limits and that are intended to be retained in the Project to GDOT.

11.3.5 Permanent Lighting

No requirements.

11.3.6 Replacement Fencing

Replace fence type in accordance with GDOT's Construction Standards and Details. Submit to GDOT for approval prior to construction the type of proposed fence should the existing type of fence not match the type provided in GDOT's Construction Standards and Details.

Remove and replace in kind, or reset if undamaged, all impacted fencing including, but not limited to, special features (e.g., brick pillars) within the Project limits. If a decorative fence is removed, install a temporary fence to prevent any further access to the property during construction.

11.3.7 Related Transportation Facilities

No requirements.

11.3.8 Design Requests from Adjacent Property Owners

If the DB Team receives any design requests from adjacent property owners, produce a report to GDOT within 30 days of receipt of each design request that identifies the following:

1. The nature of the request
2. Any financial consequences to GDOT of compliance
3. The DB Team's assessment of the feasibility of compliance
4. Any Change Requests from the Technical Provisions that would be required
5. Any potential risks to GDOT that may arise from implementation of the design request such as environmental and permitting risks

Proceed with the implementation of the design request at its option only if no financial consequences to GDOT, time impacts to the project, or Change Requests from the Technical Provisions exist, and if GDOT raises no objection within 30 days of the design request report. Advise GDOT in writing of the decision.

11.3.9 Additional Roadway Design Requirements

Install approach slabs at the beginning and ending of each bridge, conforming to GDOT Construction Standard 9017R – Reinforced Concrete Approach Slab with Asphalt Inlay 30-foot length each.

Use a minimum transition rate of 35-to-1 or flatter from the roadway shoulder to the bridge shoulder .

11.4 Construction Requirements

11.4.1 Vibration Control

The DB Team is responsible for all vibration-related damages to existing structures or other facilities located in the vicinity of construction related activities. Evaluate potential impacts and develop a Vibration Control Plan for GDOT review and acceptance where vibration-inducing construction activities are to be performed in the vicinity of existing properties, structures, utilities, or other facilities. Include in the plan certain triggers of action to ensure no damage to existing structures occur, as well as a means to resolve public concerns for the vibration at any level. Additional requirements for the Vibration Control Plan are as follows:

1. Use attenuation relationships published by applicable governmental agencies and/or applicable equipment manufacturers to estimate the zones within which vibrations caused by the Project may impact existing properties and facilities.
2. Conduct site reconnaissance of properties during site investigations to determine the sensitivity of each structure/facility to vibrations within the zone of potential vibration impacts.
3. List all properties that may be adversely affected by vibrations.
4. Conduct a preconstruction survey of each structure determined to be susceptible to vibrations.
5. Provide GDOT with recommendations to mitigate that may be adversely affected by vibrations.
6. Use the vibration monitoring records to develop attenuation curves for predicting vibrations at varying distances from the source.

Adjust operations immediately if the threshold readings above are exceeded.

11.4.2 Blasting

Follow GDOT Standard Specification 107.12 and Supplemental Specifications 107.12 2016 Edition.

Refer to Attachment 4-2 (Special Provision 107.23.H) and Section 13 (Structures) regarding bridge demolition restrictions and requirements.

11.4.3 Control of Access

Maintain all existing property accesses, including those not shown on the schematic, and do not revise control of access without GDOT review and the written agreement of the affected property owner. Ensure access control is in conformance with the *GDOT* Regulations for Driveway and Encroachment Control.

11.4.4 Pavement Cutting

Obtain prior approval from GDOT for any open cutting (removal of pavement to construct, repair, or relocate utilities/drainage structures or for any purposes that cause a full depth cut of existing pavement and removal of any subgrade beneath) of the Travel Lane pavements or ramp. Repair in kind any pavement that is open cut as described in this paragraph prior to the Travel Lane or ramp being opened to traffic.

11.4.5 Stockpiling

The stockpiling of materials may be permitted on a case by case basis provided that participation is based on the appropriate value of approved specification materials delivered by the DB Team to the Project Site, or other designated location in the vicinity of the Project and the terms and conditions below. Stockpiled materials that may qualify for material allowances include materials that are not readily available, can be easily identified and secured for this Project, and can be stockpiled for long periods without detriment. Use the procedure identified in GDOT Supplement Specifications 109.07.B to process a Material Allowance Request. Other provisions include:

1. Construct stockpiles in conformity with the provisions in the current GDOT Standard Specifications Construction of Transportation Systems. Place and maintain appropriate erosion control measures and restore the site to its original condition.
2. Store the stockpiled material in such a manner that security and inventory can be maintained. The DB Team is responsible for storage of said materials at no additional cost to GDOT.
3. Furnish the paid invoice or receipt for delivery within a reasonable time after receiving payment.
4. The material conforms with the requirements of the plans and specifications.
5. Assume risk for any damage to material due to the delay in incorporation of the material into the Final Plans.
6. Ensure the quantity of material does not exceed the quantity required by the Project, nor does the value exceed the appropriate portion of the contract item in which the material is to be incorporated.
7. Adhere to proper erosion control measures if the stockpiled material is embankment or other erodible material.

11.5 Deliverables

In addition to those listed in this Section, refer to Section 3.

12 DRAINAGE

12.1 General

Effective performance of the drainage design and construction implemented for the Project (the Drainage System) is an integral part of the success of the Project. All stormwater runoff that flows through the Project, whether originating within or outside the Project, must be accounted for in the design of the Drainage System. All existing and proposed riverine/tidal bridges, stormwater conveyances (open-channel and closed-conduit), inlets, and stormwater management such as detention/retention ponds are included as part of the Drainage System.

12.2 Administrative Requirements

12.2.1 Standards

Provide activities in this section in accordance with GDOT's *Manual on Drainage Design for Highways (Drainage Manual),* Attachment 3-1 (Manuals), and other provisions of the DB Documents.

12.2.2 Data Collection

Collect all necessary data, including those components outlined in this Section 12.2.2, to establish a Drainage System that complies with the requirements and accommodates the historical hydrologic flows within the Project limits.

Collect all available data identifying stormwater runoff obligations, including the following:

1. Water quality regulations as imposed by local, State, and federal governments
2. National Wetland Inventory and any other wetland/protected waters inventories
3. Any local floodplain ordinances in effective Federal Emergency Management Agency (FEMA) floodplains
4. Any restrictions on discharging stormwater to environmentally sensitive areas, navigable waters, or coastal zones
5. Official documents concerning the Project, such as the Environmental Documents and any other drainage or environmental studies

Determine any stormwater runoff issues that may include areas with historically inadequate drainage (evidence of flooding or citizen complaints of flooding), maintenance problems associated with drainage, and areas known to contain Hazardous Materials. Identify watershed boundaries, protected waters, areas classified as wetlands, floodplains, and boundaries between regulatory agencies (e.g., watershed districts and watershed management organizations).

Within the Project limits, acquire all applicable records, including:

1. Municipal drainage plans
2. Watershed management plans
3. Coastal zone management plans

4. Records of citizen concerns
5. Existing storm drain plans
6. Bridge hydraulic studies
7. Survey data
8. Data for all culverts, drainage systems, storm sewer systems, and bridges

Identify existing drainage areas and calculate the estimated runoff to the Drainage System.

Obtain photogrammetric and/or geographic information system (GIS) data for the Project that depict any impaired waters as listed by EPD. Conduct surveys for information not available from other sources.

Video record and photograph components of the existing drainage system within the Project limits that are scheduled to remain in place, and for which documentation is not available, to determine condition, size, material, location, and other pertinent information. Refer to Section 19 (Maintenance During the Design-Build Period).

Take data collected into account in the Final Plans of the drainage facilities. This data will be made available to GDOT upon request.

12.2.3 Coordination with Other Agencies

Coordinate all stormwater runoff issues with GDOT, affected interested parties, and regulatory agencies, including EPD, USACE, and USFWS.

12.3 Design Requirements

Ensure the Drainage System meets the following requirements:

1. The analysis, design, and construction of all components of the Drainage System address the interim conditions during construction of the Project and the conditions depicted in the RFC Plans.
2. The Drainage System has adequate capacity to convey all stormwater through the Project without any adverse impacts to upstream and/or downstream adjacent properties.

Upgrade within the Construction Maintenance Limits all substandard drainage facilities where the design and construction of the Project propose to utilize or impact those facilities. A drainage facility utilized on the Project is any drainage facility receiving Project stormwater runoff and/or any drainage facility conveying stormwater through the Project. A substandard drainage facility is any stormwater drainage system component where the existing structural condition, per Section 13 (Structures), and/or hydraulic capacity, per this Section 12, is inadequate to carry additional stormwater generated by the Project. Include in the design of the Drainage System reconfiguration of the existing drainage systems within the Project limits and design of new storm drainage systems as required per the performance requirements defined in this Section 12.

Immediately repair damage to existing infrastructure due to the DB Team's operation to maintain existing system capacity at all times. This permanent repair is DB Team's expense.

Provide facilities compatible with the existing drainage system and all applicable municipal drainage plans or systems in adjacent properties. Preserve existing drainage patterns.

Use the existing drainage facilities, provided the overall drainage requirements for the Project are achieved. Do not modify existing systems or install new drainage systems to create in-line/buried/subsurface/underground detention or stormwater runoff storage. Do not use blind junctions and/or non-accessible structures unless otherwise approved in writing by GDOT. Do not install and/or utilize longitudinal storm sewer pipe under travel lanes unless approved in writing by GDOT. Maintain the existing GDOT stormwater system, at a minimum, if no modification or upgrading is required. Include in this maintenance silt removal from any pipe, ditch, or structure and removal of any debris prior to the use of any existing GDOT stormwater system. This maintenance is the DB Team's expense.

Base Final Plans on design computations and risk assessments for all aspects of Project drainage.

Coordinate with FEMA and the appropriate local Governmental Entities regarding any impacts to regulatory floodways and floodplains. In the event a Conditional Letter of Map Revision (CLOMR) is required, obtain local Governmental Entity approval and coordinate the subsequent submission to FEMA as early in the Project timeline as possible. Allow up to one year in the schedule for FEMA approval of any required CLOMR review.

Design the Project to follow FEMA regulations in FEMA regulated floodplains. This may include bridge structures over streams, bridges or bottomless culverts over streams, increasing the tie slope and/or utilizing retaining walls to reduce fill in the flood plain/floodway.

Ensure all areas of the Project comply with the Post-Construction Stormwater Design Guidelines contained in the *Drainage Manual*.

Ensure flood damage potential for the completed Project does not exceed pre-Project conditions.

Place riprap energy dissipators, or approved equal, at the outlet/downstream end of the stormwater conveyance.

12.3.1 Surface Hydrology

12.3.1.1 Design Frequencies

Use the Design Discharge Criteria in the *Drainage Manual* and comply with CFR Part 650-Bridges, Structures, and Hydraulics.

Use the design storm frequency as required for the corresponding facility in the Final Plans if a design storm frequency is not specified for a given component of the temporary Drainage System.

12.3.1.2 Hydrologic Analysis

Design the Drainage System to accommodate the Project drainage areas. These areas may extend outside of the Project limits.

Perform hydrologic analyses for the design of drainage features during the staging of construction and for the Final Plans for the Project according to the *Drainage Manual*.

12.3.2 Storm Sewer Systems

Design enclosed storm sewer systems to collect and convey runoff to appropriate discharge points where precluded from handling runoff with open channels or ditches. Do not allow stormwater to be conveyed to and/or through the bridge endroll nor released onto the bridge endroll located under a bridge.

Prepare storm sewer analyses and ensure it constitutes a section of the Drainage Design Report that contains, at a minimum, all pertinent items shown in Figure 3.5 in the *Drainage Manual* and the following:

1. Drainage area maps with each storm drain inlet and its pertinent existing and proposed data, such as delineated drainage area, topographic contours, runoff coefficients/design curve numbers, times of concentration, land uses, discharges, velocities and headwater elevations
2. Detailed tabulation of all existing and proposed storm drains. This includes conveyance size and class or gauge; catch basin spacing/location and detailed structure designs
3. Specifications for the pipe bedding material and structural pipe backfill on all proposed pipes and pipe material alternates
4. Storm drain profiles, including pipe size, length, type, height of fill, class/gauge, gradient and design hydraulic grade line (HGL); and numbered drainage structures with station offsets from the roadway alignment and elevations

Refer to GDOT *Guideline for Geotechnical Studies, Section 4.5.26-Pipe Culvert Material Alternates* for allowable pipe and culvert material. The EOR must demonstrate to GDOT the structural and hydraulic sufficiency of existing pipes/culverts, and their functionality, impacted by construction for them to remain in place. Include in the demonstration hydraulic site inspections, calculations, bridge inventory reports, and other methods as needed. Rehabilitate pipes and box culverts as long as hydraulic capacity, structural integrity, and functionality are achieved.

12.3.2.1 Pipes

Design storm drains with design flow velocities greater than or equal to 3 feet per second (fps) or slopes greater than or equal to 0.0100 ft/ft to prevent sedimentation in the pipe.

Ensure minimum pipe inside diameter is 18 inches. GDOT acceptance is required for all existing pipes to be utilized with a diameter less than 18 inches.

Existing pipe systems not meeting GDOT's maximum structure spacing requirement that are not being impacted by the construction of the Project may remain. Upgrade an existing system impacted by the construction of the Project to meet the requirements of this Section 12.

Design the Drainage System such that there is no pressurized flow in the 10-year event or more frequent storms.

12.3.2.2 Municipal Separate Storm Sewer System (MS4)

Follow requirements in the *Drainage Manual* for compliance with GDOT's General NPDES Stormwater Permit No. GAR 041000 (MS4 Permit). The DB Team is directly responsible for the minimum control measures within the MS4 Permit, as required in Attachment 12-1 (MS4 Responsibilities - Design-Build Project). Adhere to Attachment 12-2 (Special Provision 169—Post-Construction Stormwater BMP Items). BMP details are available on GDOT's website, and special grading sheets related to BMP details are posted in the RIDs.

Provide to GDOT annual report data covering the portion of GDOT's MS4 within the Project limits 60 days prior to the end of each reporting period, as required in the MS4 Permit. Submit to GDOT a signed and sealed Post-Construction Stormwater Report prepared per the *Drainage Manual* for review and acceptance. Upon GDOT acceptance, GDOT will send the Report to EPD according to the permit requirements. EPD will have 60 days to disapprove the Report. GDOT will not issue substantial completion until after the 60-day EPD disapproval period ends. Proceed with construction at your own risk prior to the 60 days expiring. GDOT will not issue reimbursement for any revisions to installed post construction BMPs as required by EPD.

Complete the following items:

1. Provide record of attendance of GDOT training courses.
2. Provide GIS data of the existing and proposed storm sewer systems and all ditches within the ROW. Ensure this GIS data complies with GDOT's Supplemental Specification 156 – GPS Specifications for Conveyance Structures GIS Mapping (available on GDOT's website as part of the Supplemental Specifications Modifying the 2013 Standard Specifications, Construction of Transportation Systems, 2016 Edition); contact GDOT to obtain the inventory standards and MS4 policy guidance prior to any data collection efforts.
3. Clean the existing drainage system sufficiently enough to allow for the proper detailed inspection of the system within the Project limits and as required in Section 19 (Maintenance During the Design Build Period) for any proposed stormwater systems.

12.3.2.3 Gutter Spread/Ponding

Design pavement drainage systems, in both staging of construction and the Project, to limit ponding to the maximum gutter spread listed in Table 6.3 in the *Drainage Manual.* Limit ponding for all bridge decks according to Section 13.2.2 Design Spread and Frequency in the *Drainage Manual*.

Ensure concentrated stormwater is not allowed/released to flow across any travel lane within the Project. The term shallow-concentrated is synonymous with concentrated with respect to flows across travel lanes. Only allow sheet flow to flow across travel lanes.

Confine ponding in areas where PEM/OGFC is utilized to the shoulder at the limit of the PEM/OGFC with zero depth at the limit of the PEM/OGFC.

12.3.3 Hydraulic Structures (Culverts/Bridges)

Analyze existing and proposed culverts and bridges impacted, replaced, or created by the Project design, for any flooding problems.

For all culverts, determine the allowable headwater depth (HWd) for the design-year storm per the *Drainage Manual* and based on items such as potential damage or loss of use to adjacent property, the culvert, roadway, stream and/or floodplain, as well as traffic interruption or hazard to human life.

Ensure all hydraulic computations, designs, and recommendations are consistent with past studies and projects in the area performed by local, State, or federal agencies.

Consider in the design of the structure the analysis of the storage and/or the tidal surges where hydraulic design is influenced by upstream storage and/or tidal surges.

Ensure bridge culverts have a minimum rise dimension of 4 feet.

12.3.3.1 Method Used to Estimate Flows

Ensure the selected hydrologic method is appropriate for the watershed conditions by using methods detailed in Table 4.1 of the Drainage Manual.

Utilize as appropriate flow information within FEMA Flood Insurance Studies (FIS) and any subsequent Letters of Map Revision (LOMR).

Utilize the required method for calculating the design flows according to the *Drainage Manual* for crossings not located within a FEMA FIS or on a gauged waterway.

12.3.3.2 Design Frequency

Design culverts and storm drain systems for the Design Storm Event according to the Design Discharge Criteria in the *Drainage Manual*. Design bridges for the 50 and 100-year frequencies.

12.3.3.3 Hydraulic Analysis

Evaluate all bridges for contraction and pier scour concerns and design for scour protection in accordance with the *Drainage Manual*.

Install protection in accordance with Section 15 (Landscape and Hardscape Enhancements) for bridge abutments in urban areas.

12.3.3.4 Riverine Bridge/Bridge Culvert Design

Analyze each existing bridge structure with the proposed flows to ensure it provides the required freeboard per the *Drainage Manual*. If this requirement is not met, design and construct a replacement structure with sufficient capacity to pass the Design Storm Event flows while providing the required freeboards.

Analyze each existing major culvert structure with the proposed flows to ensure the headwater does not exceed that of the allowable headwater per the *Drainage Manual*. If this requirement is not met, design and construct a replacement structure with sufficient capacity to pass the proposed Design Storm Event with a resulting headwater depth of no greater than the HWd.

Design bridges/major culverts to maintain the existing channel morphology through the structure, if possible.

12.3.3.5 Bridge Deck Drainage

Ensure runoff from bridge decks is carried off the bridge and into the adjoining roadway drainage system. Include bridge approach drains to intercept gutter/shoulder flow at each end of the bridge in the roadway drainage design. Ensure stormwater flowing toward the bridge is intercepted upstream of the bridge.

Provide a closed deck drain system for the entire bridge. Ensure runoff is collected in inlets and conveyed in a closed deck drain system before discharging outside of environmentally sensitive areas.

12.4 Construction Requirements

Design the Drainage System to accommodate construction staging. Ensure the design includes temporary erosion control, sediment basins and other BMPs needed to satisfy the NPDES and other regulatory requirements. Include all environmental approval commitments related to drainage design and erosion control as notes on the plans for each stage of construction.

Obtain GDOT acceptance during the Term to utilize any existing stormwater system (all pipe, structure, ditch, detention/retention system or any other component necessary for the conveyance of stormwater) outside the Project limits. Note that maintenance responsibility and costs will be as follows during the Term:

1. Costs to reconstruct or upgrade the substandard drainage facilities outside the Project limits are the sole cost of the DB Team. Rehabilitation of substandard drainage facilities may be considered upon request from the DB Team. The rehabilitation will meet the useful life as if the substandard drainage system structure was replaced as new.
2. Maintain at the DB Team's expense any stormwater system accepted by GDOT and constructed for the sole purpose of the Project outside of the Project limits.
3. Maintain and restore at the DB Team's expense the existing system to its original intended purpose for any accepted existing stormwater system whether used jointly by the DB Team and GDOT or for the DB Team's sole use.

Maintenance work includes silt removal from any pipe, ditch, or structure, and removal of debris prior to the use of any existing GDOT stormwater system.

12.5 Deliverables

12.5.1 MS4 Annual Report Data

Provide to GDOT annual report data covering the portion of GDOT's MS4 within the Project limits 60 days prior to the end of each reporting period, as required in the MS4 Permit.

1. Provide record of attendance of GDOT training courses.
2. Provide GIS data of the existing and proposed storm sewer systems and all ditches within the ROW. Ensure this GIS data complies with GDOT's Supplemental Specification

156 – GPS Specifications for Conveyance Structures GIS Mapping (available on GDOT's website as part of the Supplemental Specifications Modifying the 2013 Standard Specifications, Construction of Transportation Systems, 2016 Edition). Contact GDOT to obtain the inventory standards and MS4 policy guidance prior to any data collection efforts.

3. Clean the existing drainage system sufficiently enough to allow for the proper detailed inspection of the system within the Project limits and as required in Section 19 (Maintenance During the Design Build Period) for any proposed stormwater systems.

12.5.2 Drainage Report for Hydraulic Structures

Prepare a Hydraulic and Hydrologic (H&H) Study and any other required documentation for all existing and/or proposed river and tidal bridge sites and for culverts that meet any of the conditions listed in the *Drainage Manual* (Section 12.1) and any Environmental Commitments identified in the approved Environmental Documents. Additional documentation may include the preparation and submittal of any CLOMR or LOMR required for community and/or FEMA coordination. Provide all documentation according to Drainage Manual Appendix I.

These H&H Studies will constitute a section in the Drainage Design Report.

12.5.3 Drainage Design Report

Submit to GDOT for review and acceptance, a Drainage Design Report, which is a complete documentation of all components of the Project's drainage system, per the accepted Construction Phasing and Staging Plan. Include the following in the report at a minimum:

1. A set of all drainage computations, both hydrologic and hydraulic, with all support data
2. Hydraulic notes, models, and tabulations
3. Submit Bridge and culvert designs and Hydraulic reports (each riverine bridge layout/design at the same time as their corresponding H&H Study)
4. Pond designs, including a graphic display of treatment areas and maintenance guidelines for operation
5. A correspondence file
6. Drainage system data (location, type, material, size, and other pertinent information) in a suitable electronic format such as GIS
7. A post-Construction Stormwater Report with a Post-Construction BMP Infeasibility Report as applicable
8. Storm sewer drainage reports (if applicable) including Temporary and Final Drainage System layout with staged erosion control BMP location details

13 STRUCTURES

13.1 General

See Attachment 13-1 for Special Provisions.

13.2 Administrative Requirements

13.2.1 Design Specifications

Provide activities in this section in accordance with:

1. GDOT's Bridge and Structures Design Manual (GDOT Bridge Design Manual),
2. AASHTO LRFD Bridge Design Specifications, 7th Edition - 2014 (AASHTO LRFD Specifications),
3. Georgia Standard Specifications, Construction of Transportation Systems, 2013 Edition and 2016 Supplemental Specifications (GDOT Standard Specifications),
4. other Attachment 3-1 Manuals, and
5. other provisions of the DB Documents.

The GDOT *Bridge and Structures Design Manual* requirements take precedence where AASHTO LRFD Specifications and GDOT *Bridge and Structures Design Manual* requirements contradict or conflict with one another.

Unless otherwise noted, use LRFD methodology for design and detailing of all structural elements to be constructed or rehabilitated and incorporated within the Project.

13.2.2 Bridge and Wall Construction Plans Meeting

Arrange a meeting with GDOT to specifically discuss how the plans will be prepared prior to beginning plan preparation on the Project. After the preliminary bridge and wall layouts have been accepted by GDOT, prepare final plans.

13.3 Design Requirements

13.3.1 Design Parameters

Design bridges crossing over waterways in accordance with Section 12 (Drainage) and the DB Documents.

Design and construct all new bridge structures to accommodate any planned expansions or updates of each facility by its respective Governmental Entity or GDOT as designated in their respective current transportation master plans. The current transportation master plans (if any) can be found in Section 11. (Roadways).

For the Technical Provisions, superstructure is the portion of the bridge above and including the bearings, and the substructure is the remaining portion of the bridge below the superstructure.

Do not place longitudinal expansion joints in any travel lanes, including turn lanes.

The DB Team may use GDOT Construction Standards and Details on the Project without updating to meet LRFD requirements. Update the design to meet LRFD requirements if the DB Team modifies any of the standards and details.

Do not use any portion of the existing bridge in the new bridge construction.

Do not use culverts or bottomless culverts to replace any existing bridge.

If expanded polystyrene is added into precast concrete elements, ensure the expanded polystyrene is high density polystyrene foam bedding material conforming to the following specifications: compressive strength 60 psi minimum, water absorption 0.125 lb / ft^2 maximum, and oxygen index 24 minimum. Ensure the expanded polystyrene meets the requirements of ASTM D-1621.

Design for a case where wind load area is based on a water elevation of the following: 20 ft below normal pool elevation of 1071.00.

13.3.1.1 Vertical Clearances

Ensure that the bottom of beam profile for the new SR 53 westbound bridge is not lower than existing SR 53 eastbound bridge bottom of beam profile at any point.

13.3.1.2 Bridge Design Live Loads and Load Ratings

Ensure that the bridge meets the load rating requirements for the design vehicle, as well as all current state legal live loads. GDOT will perform a load rating as part of the final review for the bridge design. Load ratings will be performed according to the current GDOT policy and practices.

13.3.1.3 Bridge Requirements

Replace existing bridge in accordance with the requirements listed in this Section 13.

Table 13–1: Bridge Requirements

Bridge	Bridge Location	Description
Bridge 1 **Structure ID** 139-0020-0	SR 53 WB over Chattahoochee River	Full replacement requiring new superstructure, substructure, and piers/foundations. Ensure that the bridge accommodates roadway traveled way as shown in typical section as defined in Section 11.

Do not locate the low-point of a vertical curve on a bridge or approach slab.

Place bents away from top of stream banks, a minimum of 5 feet for pile bents and 10 feet for concrete bents.

Pedestal bents are not allowed.

Ensure that the number of bents within the normal pool for the SR 53 westbound bridge equals the number of existing bents in the normal pool for the SR 53 eastbound bridge.

Ensure that the placement of bents within the normal pool for the SR 53 westbound bridge is collinear to the placement of existing bents in the normal pool for the SR 53 eastbound bridge.

If endrolls are used, utilize a maximum 2:1 (H:V) slope normal to the end bent for endrolls at bridge abutments.

Final Bridge Plan acceptance is contingent on EOR response to GDOT review of the BFI.

13.3.2 Beam Shipping Weight

The maximum weight of an Element that may be transported without analysis is limited. Submit shipping weights larger than 135,000 pounds, including the truck, to GDOT to determine if an acceptable route is available.

13.3.3 Bridge Decks and Superstructures

Timber bridges, masonry bridges, and structural plate arches are not permitted.

Do not use intermediate hinges for bridges.

Ensure each span length is at least 30 feet.

Ensure the girder spacing for beam bridges is 10.5 feet or less, with the exception of Type I mods that are limited to 9 feet or less. Provide a minimum of four beams in each span.

Minimize the number of deck joints wherever possible.

To the extent possible, make bridge superstructures, joints, and bearings accessible for long-term inspection and maintenance. Make open-framed superstructures accessible with walkways or by use of ladders or an under-bridge inspection truck.

The minimum steel beam flange thickness allowed is 1 inch. The maximum steel beam flange thickness allowed is 3 inches. The minimum steel beam flange width allowed is 18 inches.

Use constant flange width for both top and bottom flanges for the entire length of girder. At the field splice locations where the flange thickness is changed, the thicker flange shall provide a minimum 25 percent more area than the thinner flange. In addition, the thicker flange shall not be greater than twice the thickness of the thinner flange.

Use of longitudinal stiffeners is prohibited. Use of transverse stiffeners is prohibited.

Do not use cover plates on new steel beams.

Do not use Fracture Critical Members (FCMs) for bridges. Steel box girder straddle bent caps are considered FCMs due to their non-redundant properties and are not permitted on the Project. Post-tensioned concrete straddle bent caps are not considered FCMs, as the post-tensioning strands provide internal redundancy.

Box girder superstructures are not allowed.

Use of ASTM A709 Grade 50W Steel and Grade HPS 70W Steel is not permitted for steel bridge superstructure.

Paint new steel girders No. 3B, Green per Table 8 of GDOT Standard Specifications, Section 870.

Field splices utilizing bolted connections are permissible.

Ensure the following requirements are met for bolted field splices on steel girders:

1. Place bolts in double shear.
2. Do not allow splice plates and bolts to encroach on the slab design thickness.
3. Ensure contact surfaces of bolted parts meet class B requirements for slip critical joints in accordance with AASHTO.
4. Design connections as slip critical connections.
5. Ensure bolt lengths are such that threads are excluded from the shear plane in the connection.
6. Use 7/8-inch diameter bolts for typical girder splices. The size of the bolts may be increased for unusual structures with approval from GDOT.
7. Keep all erection bolts the same size, if possible.
8. Account for the effect of the splice on vertical clearance when locating the splice. Reduce vertical clearance at the splice location by the bottom flange splice plate, washer, nut, and free end of bolt (see AISC table titled “Entering and Tightening Clearance”).
9. Ensure all bolts are high-strength bolts that conform to the requirements of ASTM F3125.

Blast clean steel bridge components that require painting to a near white surface condition according to SSPC-10 and paint per GDOT Standard Specifications.

Ensure steel-cross frame designs include a horizontal member.

Ensure the paving rest is 12 inches wide. Comply with Attachment 13-3 (Paving Rest Detail).

Groove the entire length of the bridge transversely as per subsection 500.3.05.T.9.C of the GDOT Standard Specifications.

Use shear connectors in the negative moment region of steel girders with the use of precast deck panels.

Do not prestress or post-tension precast deck panels.

If using precast deck panels, use Ultra High-Performance Concrete (UHPC) for closure pours. Ensure closure pour widths are at least 6 inches.

Ensure deck drains and their attachments are 1 foot clear of all panel edges and joints.

Use K-type frames when steel diaphragms are detailed.

Florida I-Beam (FIB) shapes are allowed. Design beams in accordance with Florida Department of Transportation (FDOT) Structures Design Guidelines, FDOT Standard Specifications, FDOT FY 2018-19 Standard Plans index numbers 450-010 and 450-036 through 450-096 and FDOT standard practices, except as noted below:

1. Neglect elastic gains.
2. Do not use transformed section properties.
3. Cast beams with a bearing slot or hole for a dowel bar in accordance with the GDOT Bridge Design Manual.
4. Do not use temporary strands.
5. The Engineer of Record is responsible for providing a beam stability analysis for all span lengths.
6. Ensure maximum beam spacing of 10.5 feet.
7. Use diaphragms, edge beams, and endwalls as specified in the GDOT Bridge Design Manual.

Pot bearings are not allowed.

13.3.4 Bridge/Retaining Wall Foundations

Perform LRFD bridge and wall foundation investigations for all proposed walls and bridges to be constructed on this Project. Base the foundation design on the recommendations of the accepted Bridge or Wall Foundation Investigation report and the requirements of Section 8 (Geotechnical). Except as provided in Section 8, any previously accepted reports provided by GDOT are for informational purposes only and GDOT does not certify or warranty the information contained in these reports.

For bridges crossing streams or any other bodies of water, evaluate and design all foundations to account for the effects of scour. Include in the design the recommendations of the hydraulics and hydrological report to ensure that spread footings, piles and caissons/drilled shafts have the proper embedment below the scour line. Protect slopes with rip rap in accordance with the recommendations of the hydraulics report.

Geosynthetic Reinforced Soils (GRS) Integrated Bridge System (IBS) technology is not allowed.

13.3.5 Bridge Railing and Barriers

Ensure all barrier systems used on the Project match barriers as detailed in Attachment 13-2 (MASH Compliant GDOT Bridge Barriers) and other safety requirements as determined by GDOT. Use GDOT 42-inch Height Single Slope Barrier on both sides of the bridge.

13.3.6 Retaining Walls

To the extent possible, design and construct to provide embankments without the use of retaining walls. Where earthen embankments are not feasible, the DB Team may use retaining walls.

Do not use metal walls (including bin walls and sheet pile walls), recycled material walls, or timber walls.

If pipe culverts are to extend through cast-in-place retaining walls, install the pipe so that no wall expansion joints are located within two pipe diameters from centerline of the pipe.

If pipe culverts are under a cast-in-place retaining wall footing, provide a minimum of 1 foot of cover.

Locate weep holes through cast-in-place retaining walls no higher than 3 inches above proposed grade.

Do not use modular walls employing interlocking blocks where surcharge loads from vehicular traffic are present or as part of bridge abutments.

Do not use Mechanically Stabilized Earth (MSE) walls to support spread footing abutment foundations on the Project.

Design the top of wall to present a smooth profile with no sharp breaks, peaks, or valleys. Set the top of wall elevation for walls directly in front of bridge abutments one foot above the bottom of the adjacent abutment.

Final Wall Plan acceptance is contingent on EOR response to GDOT review of the WFI.

13.3.7 Aesthetics

Design retaining walls to be similar in color, texture, and style to other Elements present in the entire Project, such as structures, landscaping, and other highway components.

Coordinate all embellishments for structural Elements with the DB Team's structural design team to facilitate constructability and maintain safety requirements. Ensure that structural element surfaces exposed to public view meet the requirements of the GDOT Standard Specifications, Construction of Transportation Systems.

Do not allow exposed conduits on bents, columns, bridge beams, overhangs, or any other exposed surfaces. Minimize drain pipe exposure to public view.

Ensure all bridge substructure columns are consistent in form and texture, with similar shapes and details.

Construct the bridge with the same, consistent superstructure type for all spans. Construct all spans with concrete beams or construct all spans with steel girders; mixing of superstructure types is not allowed.

Bridges that are not visible to traffic either passing beneath the bridge or travelling in lanes located adjacent to the elevated portions of the bridge are not required to have all fascia beams constant throughout the bridge length.

Finish concrete as designated for "Multiple Bridges over Stream" in table of Section 500.3.05.AB.3 of the GDOT Standard Specifications.

Ensure concrete finishes comply with Section 15 (Landscape and Hardscape Enhancements) and other requirements of the DB Documents.

13.3.8 Drainage Structures

Account for maximum anticipated loadings in developing the design of drainage structures. Do not utilize step down design for any part of the proposed drainage system.

Consider energy dissipators, if used, as structural Elements.

13.3.9 Sign, Illumination, and Traffic Signal Supports

No requirements.

13.3.10 Widening/Modification of Existing Structure

No requirements.

13.3.11 Reserved

13.4 Construction Requirements

13.4.1 General Construction Requirements

Refer to Section 18 (Traffic Control) for Traffic Control requirements related to bridge construction.

Accelerated bridge construction methods may be utilized to replace existing bridges on the Project. The chosen methods are subject to review and acceptance by GDOT to ensure compliance with Project specifications as well as no adverse safety and schedule impacts to the travelling public.

Ensure all welding is performed by certified welders that have in their possession a current welding certification card issued by the Office of Materials and Testing. Only use E70XX (excluding E7014 and E7024) low hydrogen electrodes for manual shielded metal arc welding.

Ensure welding is in accordance with the requirements of the American National Standards Institute (ANSI)/AASHTO/ American Welders Association (AWS) D1.5M/D1.5:2010 Bridge Welding Code.

13.4.2 Final Bridge Inspection Prior to Substantial Completion

GDOT will inspect all bridges constructed prior to Substantial Completion. GDOT will perform the initial bridge ratings as part of this Work. Bridges shall not be opened to traffic until accepted by GDOT.

Provide to GDOT an overall schedule of completion for each structure in accordance with the Construction Phasing and Staging Plan and coordinate an inspection schedule with GDOT that will meet the Substantial Completion Date.

13.5 Deliverables

13.5.1 Preliminary Bridge Plan Layouts

Prepare Preliminary Bridge Plan Layouts in accordance with the GDOT Bridge Detailing Manual guidelines.

Additionally, provide a typical section that indicates the following information:

1. The center-to-center spacing of girders
2. Overhang or distance from outside edge of slab to center of exterior girder
3. Cross slope of the deck
4. Deck thickness between girders and deck thickness at the centerline of girder measured from the top surface of deck to top of the flange
5. Barrier location, height and width
6. Gutter to gutter and out-to-out dimensions
7. Location of the profile grade

Also provide any drawing and narrative description of the construction scheme necessary to indicate how the bridge is to be built, including traffic handling sketches and temporary barrier locations.

13.5.2 Preliminary Wall Plans

Prepare Preliminary Wall Plans in accordance with the GDOT Bridge Detailing Manual guidelines. The acceptable wall types are as follows:

1. MSE (Mechanically Stabilized Earth)
2. Cast-in place
3. Soil-nail (do not use directly adjacent to areas subject to roadway surcharge loads, including bridge end bents)
4. Modular block (do not use directly adjacent to areas subject to roadway surcharge loads, including bridge end bents)
5. Soldier pile
6. Tie-back

Other wall types may be considered by GDOT.

Any construction sequence requirements that will affect the construction of the walls need to be accounted for in the preparation of retaining wall plans.

13.5.3 Bridge and Wall Construction Plans

Provide Submittals as required in the following:

1. Section 3 (Design and Submittals)
2. Attachment 3-1 (Manuals)
3. DB Documents
4. Hardscape Enhancement Plan for bridges, retaining walls, noise barriers, sign structures, and other structure components as required in Section 15

13.5.4 Bridge Demolition Plan

Prepare a bridge demolition plan. Describe the demolition and removal methods. Provide, at a minimum, the following information in the plan:

1. A demolition schedule.
2. Location and method of protection of utilities.
3. Phasing and sequence of operations indicating construction equipment to be used for each operation being performed.
4. Location and weights of equipment on the structure during demolition.
5. Weights of equipment/materials to be staged/stockpiled on the structure. Demonstrate that the existing structure, in its partially demolished condition, is capable of supporting the weight of equipment and materials proposed to be placed on the structure during demolition.
6. When and how critical sections of the structure are to be removed (i.e., fracture critical components, arches, rigid frames) and analysis, as required, to confirm the structural stability of partial or complete parts of the structure being demolished.
7. Method of providing temporary support for elements which will become unstable as a result of the proposed demolition sequence and supporting calculations.
8. Calculations, as required above, to analyze the existing structure and temporary support conditions, prepared by a Professional Engineer licensed in the State of Georgia.
9. Methods of preventing debris, tools, or other materials from falling into the Stream/Lake and other areas under the bridge.
10. Methods of protection and safety for the general public, inspection personnel, and construction personnel.
11. Blasting plan, including Governmental Entity approvals.
12. Mudline survey information.
13. Schedule and procedure for providing pre- and post- side-scan sonar surveys.
14. Conformance with applicable permit(s) and environmental commitments; refer also to Section 4.
15. Environmental information as outlined in State of Georgia Supplemental Specifications Modifying the 2013 Standard Specification Construction of Transportation Systems current edition, Section 107.23 Environmental Considerations.
16. Additional Information as required by Governmental Entities.

Do not use portions of new bridge or SR 53 eastbound bridge to support portions of existing bridge during demolition.

Do not drop debris or portions of the existing bridge into the water for recovery.

Do not damage existing SR 53 eastbound bridge with demolition activities.

Do not proceed with demolition Work until the plan has been reviewed and accepted by GDOT. GDOT's acceptance of the plan will not relieve the DB Team of liability for safe demolition of the structure. Hold a pre-demolition meeting at the Project site prior to starting the demolition.

14 RAIL

No requirements.

15 LANDSCAPE AND HARDSCAPE ENHANCEMENTS

15.1 General

Design and construct aesthetic treatment enhancements for the roadway and landscaping Elements of the Project as defined in this Section 15 and to harmonize with the indigenous landscape and architecture.

15.2 Administrative Requirements

The intent of this Section 15 is to provide guidelines on enhancement value for both the users and the onlookers of the corridor, and to provide a roadway corridor with continuity and attractiveness using comprehensive aesthetic treatments. This Section 15 presents minimum landscape and hardscape design requirements for the Project.

15.3 Design Requirements

15.3.1 Landscape and Hardscape Enhancement Principles and Strategies

Follow the guidelines listed for preparation of any required landscaping designs and plans for GDOT review:

1. Minimize the impact of the Project on the existing natural environment to the extent possible.
2. Ensure the Project is complimentary to the indigenous landscape to the fullest extent possible.
3. Use color, texture, and form consistently for all structures.
4. Preserve unmanaged woods, existing trees, and rock outcroppings to the greatest extent possible.
5. Ensure Landscape Enhancement Plans conform to GDOT's specifications, policies, and procedures.
6. Ensure consistent visual quality of the landscape along the entire length of the Project.

15.3.2 Walls

Design noise barriers and retaining/structural walls to be similar in color, texture, and style to other Elements present in the entire Project such as structures, landscaping, and other highway components.

Apply aesthetic treatments to the vertical surfaces of retaining walls where the surface is visible from the roadway or adjacent houses.

Use consistent treatments for retaining walls that articulate the design themes established for the Project.

Provide ashlar finish where retaining walls (including cast in place walls and MSE walls) are used. Match existing pattern and color of retaining walls for new walls, which must be reviewed and accepted by GDOT prior to construction.

Use graffiti-proof coating that meets the requirements of GDOT Standard Specifications Section 838 on all visible walls.

15.3.3 Bridges and Other Structures

Coordinate all embellishments for structural Elements with the DB Team's structural design team to facilitate constructability and maintain safety requirements.

15.4 Construction Requirements

Provide GDOT samples, mock ups, or catalog cuts for review and approval prior to start of production of any embellishment element.

Provide GDOT sample panels of textured concrete surfaces a minimum of 60 days in advance of starting construction for review and approval.

15.5 Deliverables

No requirements.

16 SIGNING, PAVEMENT MARKING, AND SIGNALIZATION

16.1 General

Design and construct all signing, delineation, and pavement markings for the Project.

16.2 Administrative Requirements

16.2.1 Standards

Provide activities in this Section 16 in accordance with Attachment 3-1 (Manuals), Government Approvals, and other provisions of the DB Documents.

16.2.2 Meetings

Arrange and coordinate all meetings with local agencies that assume responsibility for maintaining and operating traffic control devices. Provide GDOT with notification of such meetings a minimum of ten Business Days prior to the start of the meeting. GDOT, in its discretion, may attend such meetings.

Arrange and coordinate all meetings with requesting agencies or individuals regarding special signs.

16.3 Design Requirements

16.3.1 Permanent Signing and Delineation

Include all new signs required for the Project and replace existing signs and structures impacted by the Project with new signs and structures that meet all applicable Attachment 3-1 requirements. Include in the design the locations of proposed ground-mounted signs, as well as existing signs that are to remain, graphic representation of all signs, proposed pavement markings, delineation placement, guide sign and special sign details, clearance diagrams, and structural and foundation requirements. Locate signs in a manner that avoids conflicts with other signs, vegetation, CMS/VMS, lighting, and structures. Ensure that signs are clearly visible, provide clear direction and information for users, and comply with all applicable Attachment 3-1 requirements. Ensure that placement, construction, and installation activities of signage avoid impacts to all environmentally sensitive resources.

GDOT will provide to the DB Team two *Your Dollars Building A Better Georgia* logo signs in either 24-inch by 36-inch or 36-by-48-inch size. Install the signs on each end of the Project prior to beginning construction. Remove the signs when GDOT issues Substantial Completion on the Project. Return the signs to GDOT upon removal.

Ensure that all sign placements meet appropriate sight line requirements and standards. Design and locate all sign structures to ensure that they and any existing GDOT overhead signs have sight distance of at least 1,000 feet and meet any other MUTCD and GDOT Signing and Marking Design Guidelines and allowable sign spacing requirements.

Review with GDOT all requests for new signs, including traffic generators, or modifications of existing sign legend. Such requests are subject to GDOT's acceptance.

Replace any existing signs and sign structures impacted by the Project or in conflict with proposed signs with new signs and structures that comply with Attachment 3-1, or as otherwise approved by GDOT.

For a sign structure mounted to a foundation that is independent from the bridge, design the sign foundation in accordance with the current edition of the AASHTO Standard Specification for Structural Supports for Highway Signs, Luminaires, and Traffic Signals.

16.3.2 Sign Support Structures

Determine foundation types and design sign foundations based upon geotechnical surveys/tests. Design sign support structures in accordance with GDOT Signing and Marking Design Guidelines and AASHTO's Standard Specifications for Structural Supports for Highway Signs, Luminaires, and Traffic Signals. Place a GDOT structural support number on the outside vertical support of the structure. Requirements for the alphanumeric code are specified in the GDOT Signing and Marking Design Guidelines. Ensure designs for sign supports comply with requirements in Section 13 (Structures). Do not use Type II cantilever signs for sign installations. Ensure that any existing overhead sign structure that has a change in design sign area and/or load due to new or revised signs meets all structural requirements in the GDOT Signing and Marking Design Guidelines and AASHTO's Standard Specifications for Structural Supports for Highways Signs, Luminaires, and Traffic Signals.

16.3.3 Permanent Pavement Marking

Ensure that the design and installation of all pavement markings including Raised Pavement Markings (RPM) comply with the Attachment 3-1. Install RPMs where new pavement marking is provided.

Contrast pavement markings are required on all concrete surfaces.

16.3.4 Permanent Signalization

No requirements.

16.4 Construction Requirements

16.4.1 Permanent Pavement Marking

Install full pattern pavement markings on all pavement courses before any roadway is opened to traffic. Place and maintain RPMs when the roadway is open to traffic.

Before placing any permanent pavement markings, provide GDOT a layout indicating the proposed location of such items.

16.4.2 Permanent Signing and Delineation

Use established industry and utility safety practices when erecting or removing signs located near any overhead or underground utilities, and consult with the appropriate Utility Owners prior to beginning such work.

Maintain all applicable advance guide signs and any exit direction signs in place at all times and ensure they do not obstruct the view of the signs to the motorist. Replace any other removed signs before the end of the work day.

Ensure signing reflectivity conforms to the Attachment 3-1.

Before placing any permanent signs, delineation, third-party signs, or non-standard sign structures, provide GDOT a layout as part of the Final Plans indicating the proposed location of such items.

16.4.3 Project Signs – Outside the Existing and Proposed ROW

For signs located outside the Existing ROW, Proposed ROW, and Additional Properties, but within a public ROW, install the signs in existing rights of way controlled by local or other Governmental Entities. Coordinate with applicable Governmental Entities for the design, approval, and installation of such signs, including any trailblazing signing required for the Project.

16.4.4 Specific Service Signs

No requirements.

16.5 Deliverables

16.5.1 Final Plans

Submit the Preliminary and Final Plans for the signing, delineation, and pavement marking for GDOT review and acceptance.

17 INTELLIGENT TRANSPORTATION SYSTEMS

No requirements.

18 TRAFFIC CONTROL

18.1 General

Provide for the safe and efficient movement of people, goods, and services through and around the Project while minimizing negative impacts to users, residents, and businesses.

18.2 Administrative Requirements

18.2.1 Standards

Provide activities in this section accordance with Attachment 3-1 (Manuals), Government Approvals, and other provisions of the DB Documents.

18.2.2 Worksite Traffic Control Supervisor (WTCS)

Designate a qualified individual as the WTCS. The WTCS is responsible for selecting, installing, and maintaining all traffic control devices in accordance with the Plans, Specifications, Special Provisions, and the MUTCD. Ensure the WTCS is currently certified by either the American Traffic Safety Services Association (ATSSA) Work Site Traffic Supervisor Certification program or the National Safety Council Certification program. On-line classes will not be accepted.

Ensure the WTCS is available on a 24-hour basis to perform duties. If the Work requires traffic control activities to be performed during the daylight and nighttime hours, designate an alternate WTCS if necessary. Ensure any alternate WTCS meets the same requirements and qualifications as the primary WTCS and is accepted by GDOT prior to beginning any traffic control duties. The WTCS's traffic control responsibilities have priority over all other assigned duties.

The WTCS has full authority to act on behalf of the DB Team in administering the Traffic Control Plan. Ensure the WTCS has appropriate training in safe traffic control practices in accordance with Part 6 of the MUTCD. Ensure all other individuals making decisions regarding traffic control also meet the training requirements of Part 6 of the MUTCD.

Ensure the WTCS has a copy of Part 6 of the MUTCD and the Contract on the Site. Copies of the current MUTCD may be obtained from the FHWA web page at http://mutcd.fhwa.dot.gov.

The WTCS supervises the initial installation of traffic control devices. Prior to the beginning of construction, GDOT will review the initial installation. The WTCS reviews modifications to traffic control devices as required by sequence of operations or staged construction.

Ensure that any Work performed on highway right-of-way that requires traffic control is supervised by a submitted/approved certified WTCS. Perform no work requiring traffic control unless the certified WTCS is on the work site. Failure to maintain a Certified WTCS on the work site will be considered as non-performance under Volume 1, Exhibit 18 (Measures of Liquidated Damages and Nonrefundable Deductions).

Ensure the WTCS is available to maintain traffic control devices with access to all personnel, materials, and equipment necessary to respond effectively to an emergency within forty-five minutes of notification of the emergency.

Ensure the WTCS performs inspections, at a minimum, once a month to maintain traffic control. The inspections will start with the installation of the advance warning signs and continue until a Maintenance Acceptance is issued or when the punch list is completed.

Ensure the WTCS includes both daytime and nighttime reviews in an inspection. Report the inspection to GDOT on a Traffic Control Inspection Report (TC-1). Correct routine deficiencies within a 24-hour period unless modified by the Technical Provisions or by GDOT. Failure to comply with these provisions are grounds for dismissal from the duties of WTCS and/or removal of the WTCS from the Project. Failure of the WTCS to execute his duties will be considered as non-performance. GDOT will periodically review the Work for compliance with the requirements of the Traffic Control Plan.

GDOT may allow the DB Team's Project superintendent, foreman, subcontractor, or other designated personnel to serve as the WTCS on projects where traffic control duties do not require full time WCTS supervision, as long as the individual meets the requirements and performs the duties of a WTCS and satisfactory results are obtained.

18.3 Design Requirements

18.3.1 Transportation Management Plan

Prepare and implement a Transportation Management Plan (TMP) that meets the requirements of the FHWA Work Zone Mobility and Safety Program which can be found at:

http://www.ops.fhwa.dot.gov/wz/resources/final_rule/tmp_examples/tmp_dev_resources.htm

Include in the TMP descriptions of the qualifications and duties of the Worksite Traffic Control Supervisor (WTCS) and other personnel with traffic control responsibilities. Also include the following:

1. Procedures to identify and incorporate the needs of transit operators, Utility Owners, Governmental Entities, local governmental agencies, emergency service providers, school districts, business owners, and other related users, Customer Groups or entities in the Project corridor and surrounding affected areas
2. Procedures for obtaining acceptance of detours, road and lane closures, and other traffic pattern modifications from applicable Governmental Entities, as well as the implementation and maintenance of those modifications. Ensure these procedures encompass

    a. notification of the traveling public by placing CMSs a minimum of seven days in advance of actual roadway closure or major traffic modifications. When possible, coordinate and utilize overhead changeable message signs on the regional ITS system.
    b. utilization of workzone law enforcement for mainline lane closures.

3. Procedures for signing and marking transitions during construction from one stage to the next and from interim to permanent signing and marking
4. Procedures for maintenance and replacement of traffic control devices, including pavement markings and traffic barriers, if used
5. Procedures for regular evaluation and modification of traffic signal timings (including those affected by detours) and procedures for all affected signals to include implementation, testing, and maintenance, as well as GDOT acceptance, and any necessary local Governmental entity acceptance
6. Procedures to coordinate with the appropriate Governmental Entities regarding operating signal networks along the Project or Project detour routes to ensure temporary system compatibility, establish responsibilities for temporary signal installation, maintenance, operation and removal, and coordinate traffic signal timing with local signal networks
7. Procedures and processes for the safe ingress and egress of construction vehicles in the work zone
8. Provisions for continuous access to established truck routes and Hazardous Material (HazMat) routes, and for suitable detour routes, including obtaining any acceptances required by the appropriate Governmental Entities for these uses
9. Procedures for modification of plans as needed to adapt to current Project circumstances
10. Procedures for communication of TMP information, if required, to the DB Team's public information personnel, and for public notification of maintenance of traffic issues in conjunction with the requirements of Section 2.7 (Public Information and Communications)
11. Descriptions of contact methods, personnel available, and response times for any deficiencies or Emergency conditions requiring attention during off-hours

Submit the TMP within 120 days from NTP 1. Obtain GDOT acceptance prior to NTP 3.

Ensure the safe, convenient passage of the traveling public at all times. Prepare contingency traffic control plans for use in relieving travel delays. If in GDOT's sole opinion, sustained traffic control placement creates an unnecessary hindrance to the travelling public, implement contingency plans that will either alleviate traffic congestion or cease traffic interruptions immediately upon notification from GDOT.

Develop a detailed plan for all Project detours, including a narrative of all detour activities, schedules, timelines, and maps, and include it within the Transportation Management Plan (TMP). Include descriptions of the approach for communicating this information to the traveling public.

18.3.2 Traffic Control Plans

Use the procedures in the TMP (if applicable) and the guidelines of the MUTCD, AASHTO's Roadside Design Guide, and comply with GDOT Special Provision 150, Traffic Control, to develop detailed traffic control plans which provide for all Construction Phases and construction stages, as well as all required traffic shifts procedures.

Produce a traffic control plan for every Construction Phase that impacts traffic. Submit each traffic control plan to GDOT for review a minimum of fourteen days prior to implementation. Include in the traffic control plan details for all detours, traffic control devices, striping, and signage applicable to each Construction Phase. Ensure information included in the traffic control plans is of sufficient detail to allow verification of design criteria and safety requirements, including typical sections, alignment, striping layout, drop off conditions, and temporary drainage. Clearly designate in the traffic control plans all temporary reductions in speed limits. Changes to posted speed limits are not allowed unless specific prior acceptance is granted by GDOT.

Substantially complete and open new travel lanes prior to demolition and removal of the existing bridge. Reflect the order of construction in other areas of the Project including the staging plans, Transportation Management Plan, and Bridge Demolition Plan.

Separate opposing traffic on a divided roadway with appropriate traffic control devices in accordance with the MUTCD based on the roadway Design Speed and Attachment 3-1.

Maintain signing continuity on all active roadways within or intersecting the Project at all times.

Ensure all streets and intersections remain open to traffic to the greatest extent possible by constructing the Work in stages, and maintain access to all adjacent streets and provide for ingress and egress to public and private properties at all times during the term of the Project.

Prepare public information notices, if required, in coordination with Section 2.7 in advance of the implementation of any lane closures or traffic switches. These notices are referred to as Traffic Advisories.

Provide a minimum of four changeable message signs for use as needed. Place and maintain messages on all message boards 24 hours a day, seven days a week, as directed by GDOT. Ensure the changeable message signs meet all requirements of Standard Specification Section 632, Changeable Message Sign, Portable Type 3. Failure to respond to the direction of GDOT within 45 minutes will result in the assessment of non-refundable deductions.

18.3.2.1 Roadway Guidelines

Produce traffic control plans for periods of construction in accordance with Attachment 3-1 (Manuals), GDOT Special Provision Section 150, and the DB Documents.

18.3.2.1.1 Design Parameters for Traffic Control

Design Vehicle: Accommodate a design vehicle via turning movements specified by the GDOT Design Policy Manual for specific road classifications. Turning movements on all other local streets and driveways will, at a minimum, provide similar characteristics as existing Geometry.

Work Zone Speed Limits: Ensure the work zone speed limits on State Highways are in conformance with GDOT Special Provision 150. Maintain AASHTO stopping sight distances during construction.

Number of Lanes: Ensure the minimum number of lanes to be maintained is the number of lanes currently available on each controlled access facility except as allowed by this Section 18.

Lane closures on other roadways may be considered as long as all traffic patterns and accesses are not reduced and are maintained.

Lane Widths: During construction, the minimum lane width for main lanes, frontage roads, and major crossing streets is 11 feet. For minor crossing streets, GDOT may, in its sole discretion, allow 10-foot lanes in limited circumstances during construction for short distances after reviewing the DB Team's traffic control plan. See Section 18.3.2 (Traffic Control Plans) for additional information.

18.3.2.1.2 Allowable Shoulder/Lane/Roadway Closures and Traffic Stage Changes

Provide GDOT and appropriate Customer Groups a minimum of 2 weeks advance notice in writing for lane/shoulder closures and/or traffic stage changes planned to be in effect longer than twenty-four hours. Provide a minimum of 24 hours advance notice for lane closures that are planned to be in effect less than 24 hours, using all appropriate tools as needed. Coordinate the closure restrictions with GDOT on all lane/shoulder closures (or an event that results in lane closures) into GDOT's ITS web-based information tool.

Coordinate closures with adjacent projects to ensure the safe and convenient passage of the traveling public. During construction of the Project, GDOT will facilitate coordination with all local entities for traffic control.

18.3.2.1.3 Lane and Shoulder Closure During Design-Build Period

SR 53 Eastbound and SR 53 Westbound

A single lane closure may be permitted to perform construction activities, subject to acceptance by GDOT. Single lane closures will be allowed between the following hours:

	Day	Time	Months	Instructions
Daily	Monday through Friday	11:00 a.m. - 2:00 p.m.	All Year	Shifting the westbound traffic to the eastbound bridge is **not** permissible.
Nightly	Monday through Thursday	7:00 p.m. - 6:00 a.m.	All Year	Shifting the westbound traffic to the eastbound bridge is permissible. If the DB Team shifts traffic, two lanes of travel must be maintained at all times (one lane eastbound, one lane westbound).
	Friday through Monday	10:00 p.m. - 6:00 a.m.	April 1 – December 31	
Continuous	Friday through Monday	10:00 p.m. - 6:00 a.m.	January 1 – March 31	
Note: Single lane closures and traffic shifts are not allowed outside of the times listed above.				

Lake Ranch Court

Do not install lane closures, pace traffic, or move equipment or materials that interferes with traffic on Lake Ranch Court.

Boat Traffic

Maintain a minimum of 60 feet on Chattahoochee River/Lake Lanier through the Project Site at all times for safe boat passage. Coordinate with the USACE on locations of boating channel during phases of construction and demolition and prior to placement of any required buoys, and install temporary channel demarcation signing as approved by the USACE.

Full Roadway and Waterway Closure

The full roadway closure of SR 53, SR 53 eastbound, SR 53 westbound, or any of SR 53 connecting side roads is not permitted.

Do not close any full roadway (all lanes and shoulders) and/or waterway unless accepted by GDOT, US Army Corps of Engineers (USACE), and Governmental Entities having jurisdiction of roadways or waterways affected by the closure.

GDOT and USACE have the right to lengthen, shorten, or otherwise modify the foregoing restrictions as actual traffic conditions may warrant. Utilize workzone law enforcement for all detours.

Submit a Traffic Control Plan for any complete roadway and/or waterway closure for acceptance by GDOT, USACE, and Governmental Entities having jurisdiction of roadways affected by the closure. Consider availability of frontage roads, ramp locations and detour distances in the design.

Holiday Restrictions

No Work that restricts or interferes with traffic will be allowed during the periods specified in the following holiday schedule. GDOT has the right to lengthen, shorten, or otherwise modify these restrictions as actual or projected traffic conditions may warrant.

Table 18-1: Holiday and Event Restrictions Schedule

		Restriction Begins	Restriction Ends
1.	Easter (Thursday through Monday)	Thursday at 6:00 a.m.	Monday at 10:00 p.m.
2.	Memorial Day Weekend (Friday through Monday)	Friday at 6:00 a.m.	Monday at 10:00 p.m.
3.	Independence Day	July 2 at 6:00 a.m.	Monday following July 4 at 10:00 p.m.
4.	Labor Day Weekend (Friday through Monday)	Friday at 6:00 a.m.	Monday at 10:00 p.m.
5.	Thanksgiving Holiday (Wednesday through Monday)	Wednesday at 6:00 a.m.	Monday at 10:00 p.m.
6.	Christmas/New Year Holiday	December 23 at 6:00 a.m.	January 3 at 10:00 p.m.
7.	Georgia Tax Free Weekend/Sales Tax Holiday (typically Saturday and Sunday, late July and late September)	Friday at 6:00 a.m.	Sunday at 10:00 p.m.
8.	Spring Break (traditionally the 2nd or 3rd week of March, but may vary) (Friday before, Saturday through Saturday, Sunday, Monday)	Friday at 6:00 a.m.	Monday at 12:00 noon

18.4 Construction Requirements

Ensure traffic control is in accordance with GDOT accepted TMP and applicable provisions of the MUTCD and GDOT Special Provision Section 150, Traffic Control.

18.4.1 DB Team Responsibility

If at any time GDOT determines the DB Team's traffic control operations do not meet the intent of the TMP, if applicable, or any specific traffic control plan, immediately revise or discontinue such operations to correct the deficient conditions.

Provide GDOT the names of the certified WTCS and support personnel, and the phone number(s) where they can be reached 24 hours per day, seven days per week.

Utilize workzone law enforcement equipped with a marked patrol vehicle and blue flashing lights to enforce traffic laws in construction workzones and administer this service. Deploy workzone law enforcement during lane closures, traffic pacing, and at all other times necessary for the safety of everyone within the Project limits. Coordinate and schedule the utilization of the workzone law enforcement.

Provide a daily work record compiled on a form provided by GDOT, signed by the workzone law enforcement, and signed by the WTCS attesting that the workzone law enforcement was utilized during the time recorded. No separate payment will be made for workzone law enforcement. Coordinate, schedule, and administer workzone law enforcement.

Ensure all milled surfaces are covered before they are opened to traffic.

Payment for workzone law enforcement to be included in Construction Complete.

18.4.2 Access

Maintain existing bicycle and pedestrian access and mobility across all cross streets. Maintain access to existing transit stop locations during construction or provide reasonable alternative locations if applicable.

18.4.3 Detours

Maintain all detours (if approved by GDOT). Provide a pavement transition, required in accordance with AASHTO's Roadside Design Guide, GDOT guidelines, and the MUTCD, based on the roadway design speed of the section, at all detour interfaces.

19 MAINTENANCE DURING THE DESIGN-BUILD PERIOD

19.1 General

Assume full responsibility for maintaining the Project from NTP 3 through the remainder of the Design-Build Period in a manner that provides a safe and reliable transportation system.

19.2 Administrative Requirements

19.2.1 Standards

Provide activities in this section in accordance with GDOT Standard Specifications 104.05, 105.14, 105.15, Attachment 3-1 (Manuals), Government Approvals, and other provisions of the DB Documents.

19.3 Design Requirements

19.3.1 GDOT Obligation to Repair

GDOT or the appropriate local Governmental Entity will, between the effective date and NTP 3, reasonably perform the type of routine maintenance of each Element Category of the existing improvement that normally occurs in GDOT's highway maintenance and repair program. Neither GDOT nor the appropriate local Governmental Entity is obligated to extend the residual life of any Element through reconstruction, rehabilitation, restoration, renewal, or replacement.

19.3.2 Joint Project Inspection

Conduct a Joint Project Inspection of the Project area within the Construction Maintenance Limits Plan and obtain GDOT approval no later than 150 days after NTP 1. Perform the physical in-field Joint Project Inspection with a GDOT-authorized representative and/or GDOT in attendance. The purpose of the Joint Project Inspection is to create a physical baseline of the existing real estate and permanent fixtures and assets of GDOT prior to the start of construction. The area encompasses the entire Project area including areas containing required elements outside of the limits of the Project.

Clean the existing drainage system sufficiently enough to allow for the proper detailed inspection of the system during the joint inspection within the Construction Maintenance Limits and as required in Section 19.

Include the following in the Joint Project Inspection submittal report:

1. Preliminary Plan or Construction Maintenance Limits Plan providing marked-up notes of deficiencies and location reference for cross-referencing any photographs or additional information denoting the existing condition of the infrastructure within the proposed Construction Maintenance Limits Plan area.
2. Pre-construction digital photographs and high-resolution digital video of the Project Area including all existing facilities, structures, and environmentally sensitive areas that can readily depict the exact conditions of the existing Elements of the Work. Provide a

sample report of a section of the Project to determine the level of expected accuracy and increments of the photo documentation.

3. Intermittent photographs along the pavement and shoulders to clearly depict the existing condition of the pavement and shoulders that will be utilized during construction. Maintain the existing pavement and shoulders to a condition equal to or better than existing conditions at all times during the Design-Build Period.
4. Pre-construction digital photographs and high-resolution digital video of existing bench marks, temporary bench marks, existing utilities, and trees and plants to remain.
5. Video recording storm sewers and drainage systems and structures prior to the beginning of construction within the Construction Maintenance Limits Plan or to the nearest structure outside the Construction Maintenance Limits Plan, whichever is greater.

19.3.3 Construction Maintenance Limits Plan

Provide a Construction Maintenance Limits Plan as a drawing or set of drawings that highlight the exact area of the proposed construction and maintenance responsibilities within the ROW, as well as the limits of any Additional Properties to be acquired for the Project. Use this plan as the boundary for construction Work and as the exact limits to maintain any element required to construct the Project beginning at NTP 3 and through Final Acceptance. Perform all maintenance activities within Plan limits in accordance with the GDOT Standard Specifications, Construction of Transportation Systems, including:

1. Pavement maintenance, including pothole patching, concrete patching, striping, etc.
2. Existing Drainage System continuity
3. Landscaping repair
4. Utility Adjustments

Provide the final Construction Maintenance Limits Plan no later than 150 days after NTP 1. If the Project is broken into separate construction phases, provide and obtain approval of the final Construction Maintenance Limits Plan prior to the start of construction of that phase. Ensure the Plan shows hash marks or a method to clearly depict the area of the construction maintenance limits. Depict in the Construction Maintenance Limits Plan, and obtain prior GDOT approval for, all proposed staging and lay-down areas.

Perform all maintenance for any area(s) encroached on by the performance of the construction Work, notwithstanding GDOT's approval of the Construction Maintenance Limits Plan. See Section 2 (Project Management) for additional requirements.

Maintain pavement markings including striping.

Maintenance constitutes continuous and effective work prosecuted day by day or at the direction of GDOT.

Restore any local roads utilized for hauling, staging, or other construction-related activity to their original condition, whether within or outside of the Project limits. Make the repair within a

reasonable period of time as determined by GDOT. Multiple repairs may be required if the damage occurs more than once or after an initial repair. Ensure all repairs are in satisfactory condition as determined by GDOT prior to Final Acceptance.

Restore the Existing ROW within the construction maintenance limits to a condition equal to or better than existing conditions by Substantial Completion.

Maintain and repair any element affected by use of part of the facility outside of the specified maintenance limits by any means, such as lane/shoulder closures, staging, or any other activity as required above. Revise the Construction Maintenance Limits Plan to incorporate the new maintenance limits.

19.3.4 Maintenance Management Plan

In conjunction with the Construction Maintenance Limits Plan, prepare a Maintenance Management Plan that outlines the frequency of inspection and repair and/or maintenance of those items under the DB Team's responsibility. Include in the plan at a minimum the following:

1. Pavement inspection and repair
2. Debris removal on the traveled way
3. Guardrail inspection and safety protections in place where guardrail has been damaged within 48 hours, and repair of damage within 7 days
4. Temporary striping restriping at no longer than 60-day intervals, or more frequently if required

20 BICYCLE AND PEDESTRIAN FACILITIES

No requirements.

21 RESERVED

22 NOISE BARRIERS

No requirements.

23 TRANSIT

No requirements.

Georgia Department of Transportation

Technical Provisions

For

Design-Build Agreement

P.I. No. 0010212

Attachment 3-1

MANUALS

Manuals

All Work shall conform with all applicable Manuals and Guidelines developed for and including AASHTO, FHWA, GDOT, and additional requirements stated in this document and reasonably inferred therefrom. It is the Design-Build Team's responsibility to verify order of the precedence of any State or Federal manual requirement where any potential conflict may exist. The Design-Build Team shall coordinate with the appropriate State and/or Federal agency to confirm the policy and regulations to avoid any conflict of the following manuals prior to design and/or construction. Following is a list of manuals and guidelines that shall be used in the performance of the Work provided that the Work shall not be governed solely by such manuals and guidelines listed herein, and provided further that it is the Design-Build Team's responsibility to locate and utilize the most current edition in effect at the date identified in Article 7.2.4 of Volume 1, including updates, of all such referenced materials for the Work required.

1. AASHTO – A Policy on Geometric Design of Highways and Streets
   https://bookstore.transportation.org/collection_detail.aspx?ID=110
2. AASHTO – Guide for High-Occupancy Vehicle Facilities
   https://bookstore.transportation.org/Item_details.aspx?id=114
3. AASHTO – Standard Specification for Structural Supports for Highway Signs, Luminaires and Traffic Signals (LTS-6)
   https://bookstore.transportation.org/collection_detail.aspx?ID=126
4. AASHTO – Roadside Design Guide
   https://bookstore.transportation.org/item_details.aspx?ID=1807
5. AASHTO – Roadway Lighting Design Guide
   https://bookstore.transportation.org/item_details.aspx?ID=1412
6. AASHTO – AASHTO Standard Specifications for Highway Bridges, 17th Edition - 2002
   https://bookstore.transportation.org/Item_details.aspx?id=51
7. AASHTO – AASHTO LRFD Bridge Design Specifications, 7th Edition - 2014
   https://bookstore.transportation.org/collection_detail.aspx?ID=132
8. AASHTO –Manual for Bridge Evaluation, 2nd Edition, with 2011 Interim Revisions
   https://bookstore.transportation.org/item_details.aspx?ID=1809
9. AASHTO – Guide Specification for Structural Design Sound Barrier
   https://bookstore.transportation.org/item_details.aspx?ID=1155
10. AASHTO – AWS D1.1/ANSI Structural Welding Code – Steel
    http://www.techstreet.com/cgi-bin/detail?doc_no=AWS%7CD1_1_D1_1M_2008&product_id=1519645
11. AASHTO – D1.5/AWS D1.5 Bridge Welding Code
    https://bookstore.transportation.org/item_details.aspx?ID=1756
12. AASHTO – Highway Capacity Manual
    http://www.techstreet.com/cgi-bin/detail?product_id=957255

13. AASHTO – Manual for Assessing Safety Hardware (MASH), 2nd Edition, 2016
    https://bookstore.transportation.org/Item_details.aspx?id=2707
14. Federal Highway Administration (FHWA) Roadway Construction Noise Model (RCNM) and Guideline Handbook
    http://www.fhwa.dot.gov/environment/noise/construction_noise/rcnm/index.cfm
15. AISC Manual of Steel Construction, referred to as "AISC Specifications"
    http://www.aisc.org/store/p-1578-steel-construction-manual-thirteenth-edition.aspx
16. American National Standards Institute (ANSI)/ Illuminating Engineering Society of North America (IESNA) RP-14-8-Recommended Practice for Roadway Lighting
    http://www.ies.org/store/product/roadway-lighting-ansiies-rp814-1350.cfm
17. America Disabilities Act Accessibility Guidelines (ADAAG)
    http://www.ada.gov/stdspdf.htm
18. FHWA - Manual on Uniform Traffic Control Devices (MUTCD)
    http://mutcd.fhwa.dot.gov/
19. GDOT – Signing and Marking Design Guidelines
    http://www.dot.ga.gov/PS/DesignManuals/DesignGuides
20. GDOT – Utility Accommodation Policy and Standards Manual
    http://www.dot.ga.gov/PS/Utilities
21. GDOT - Guidelines on Geotechnical Studies
    http://www.dot.ga.gov/PS/DesignManuals/DesignGuides
22. GDOT – STI (Sampling, Testing and Inspection) Quick Guide and Documents
    http://www.dot.ga.gov/PS/Materials
23. GDOT – Qualified Products List (QPL)
    http://www.dot.ga.gov/PS/Materials/QPL
24. GDOT – Pavement Design Manual
    http://www.dot.ga.gov/PS/Materials
25. GDOT – Pavement Type Selection Manual
    http://www.dot.ga.gov/PartnerSmart/DesignManuals/Pavement/Pavement%20Type%20Selection%20Manual.pdf#search=Pavement%20Type%20Selection
26. GDOT –Drainage Design for Highways
    http://www.dot.ga.gov/PS/DesignManuals/DesignGuides
27. GDOT – Automated Survey Manual
    http://www.dot.ga.gov/PS/DesignManuals/DesignGuides
28. GDOT – Regulations for Driveway and Encroachment Control
    http://www.dot.ga.gov/PS/DesignManuals/DesignGuides
29. GDOT – Electronic Data Guidelines
    http://www.dot.ga.gov/PS/DesignManuals
30. GDOT – Plan Development Process
    http://www.dot.ga.gov/PS/DesignManuals/DesignGuides
31. GDOT – Plan Presentation Guide
    http://www.dot.ga.gov/PS/DesignManuals

32. GDOT – Preliminary Field Plan Review Checklist
http://www.dot.ga.gov/PS/DesignManuals/DesignResources
33. GDOT – Final Field Plan Review Checklist
http://www.dot.ga.gov/PS/DesignManuals/DesignResources
34. GDOT – Design Policy Manual
http://www.dot.ga.gov/PS/DesignManuals/DesignGuides
35. GDOT – ITS Design Manual
http://www.dot.ga.gov/PS/DesignManuals/DesignGuides
36. GDOT – NPDES General Permit Guidance
http://www.dot.ga.gov/PS/DesignManuals/DesignGuides
37. GDOT – MS4 Special Design Post-Construction Details
http://www.dot.ga.gov/PartnerSmart/DesignManuals/NPDES/MS4 Special Design Details.zip
38. GDOT –Bridge and Structures Design Manual
http://www.dot.ga.gov/PS/DesignManuals/DesignGuides
39. GDOT – Environmental Procedures Manual
http://www.dot.ga.gov/PS/DesignManuals/EnvironmentalProcedures
40. GDOT – Standard Specifications, Construction of Transportation Systems
http://www.dot.ga.gov/PS/Business/Source
41. GDOT – Special Provisions and Supplemental Specifications
http://www.dot.ga.gov/PS/Business/Source
42. GDOT – Construction Standards and Details
http://mydocs.dot.ga.gov/info/gdotpubs/ConstructionStandardsAndDetails/Forms/AllItems.aspx
43. GDOT – Right of Way Manual
http://www.dot.ga.gov/PartnerSmart/DesignManuals/ROW/00ExternalRightofWayManual.pdf
44. GDOT – Acquisition Guide for Local Public Agencies
http://www.dot.ga.gov/PartnerSmart/DesignManuals/ROW/ROW-AcquisitionGuideforLocalPublicAgenciesSponsors.pdf
45. GDOT – Statewide MS4 Permit
http://epd.georgia.gov/sites/epd.georgia.gov/files/related_files/site_page/Final_DOT_SW_NPDES_Permit_MS4_Dec_2011.pdf
46. GDOT – Design of Post-Construction BMPs
http://www.dot.ga.gov/PS/DesignManuals/DesignGuides
47. Georgia Soil and Water Conservation Commission - Manual for Erosion and Sediment Control in Georgia
http://gaswcc.georgia.gov/manuals
48. GDOT – Facilities Stormwater Pollution Prevention Plan
49. GDOT – Stormwater System Inspection and Maintenance Manual
http://www.dot.ga.gov/PS/DesignManuals/DesignGuides

50. Bridge Inspection Evaluation Maintenance Manual
https://bookstore.transportation.org/item_details.aspx?ID=1617
51. FHWA Diverging Diamond Interchange Informational Guide
https://safety.fhwa.dot.gov/intersection/alter_design/pdf/fhwasa14067_ddi_infoguide.pdf
52. FHWA Traffic Detector Handbook
http://www.fhwa.dot.gov/publications/research/operations/its/06108/06108.pdf
53. FHWA Mitigation Strategies for Design Exceptions
http://safety.fhwa.dot.gov/geometric/pubs/mitigationstrategies/fhwa_sa_07011.pdf
54. FHWA Traffic Monitoring Guide
http://www.fhwa.dot.gov/ohim/tmgbook.pdf
55. Occupational Safety and Health Administration Standards (OSHA)
http://www.osha.gov/pls/oshaweb/owasrch.search_form?p_doc_type=STANDARDS&p_toc_level=1&p_keyvalue=Construction
56. National Electrical Safety Code ANSI C2 (NESC)
http://standards.ieee.org/nesc/nesc_preprint.html
57. U. S. Environmental Protection Agency Regulations
http://www.epa.gov/lawsregs/
58. GDOT – Public Information Policy Manual
http://www.dot.ga.gov/PartnerSmart/DesignManuals/Environmental/Public%20Involvement%20Plan/PublicInvolvementPlan.pdf
59. American Railway Engineering and Maintenance-of-Way Association (AREMA)
https://www.arema.org/
60. GDOT – Work Zone Safety and Mobility Policy
http://www.dot.ga.gov/PartnerSmart/Training/Documents/WZS/WorkZoneSafety/images/WorkZoneSafetyandMobilityPolicyRewwithsubpartK.DOCX
61. GDOT – Quality Control and Quality Assurance Manual
http://www.dot.ga.gov/PS/DesignManuals/DesignResources
62. Federal Railroad Administration Regulations
http://www.fra.dot.gov
63. Public Project Information for Construction and Improvement Projects That May Involve the Railroad (CSX)
https://www.csx.com/index.cfm/library/files/about-us/property/public-project-manual/
64. MUTCD – Standards Highway Signs and Markings
http://mutcd.fhwa.dot.gov/ser-shs_millennium.htm
65. 2016 Edition of the Georgia Stormwater Management Manual Volumes 1 & 2
http://www.georgiastormwater.com/
66. Georgia EPD – Coastal Stormwater Supplement to the Stormwater management Manual
https://epd.georgia.gov/georgia-epd-coastal-stormwater-supplement-stormwater-management-manual
67. GDOT – ITS Strategic Deployment Plan (Posted on SharePoint)

68. ITE/AASHTO Traffic Management Data Dictionary (TMDD), Standards for Traffic Management Center to Center Communications Version 2.1
69. AASHTO – A Policy on Design Standards Interstate System https://bookstore.transportation.org/item_details.aspx?ID=1175
70. Georgia Traffic Incident Management Guidelines http://www.timetaskforce.com/documents/TIM/GeorgiaTIMGuidelines_FINAL_V0003.pdf
71. GDOT – Construction Manual and Form Documents http://www.dot.ga.gov/PartnerSmart/Business/Source/Pages/ConstructionSpecs.aspx
72. Other manuals, documents, procedures and standards as referenced in the DB Documents

Georgia Department of Transportation

Technical Provisions

For

Design-Build Agreement

P.I. No. 0010212

Attachment 3-2

CONCRETE BARRIER SPECIAL PROVISIONS

SP 621 Concrete Barrier

DEPARTMENT OF TRANSPORTATION
STATE OF GEORGIA
SPECIAL PROVISION
P.I. NO: 0010212
COUNTY: Hall

Section 621—Concrete Barrier

Delete Subsection 621.2 and substitute the following:

621.2 Materials

Use materials that meet the requirements of the following Specifications:

Material	Section
Portland Cement Concrete, Class AA	500
Steel Bars for Concrete Reinforcement	853.2.01
Joint Fillers and Sealers	833

Ensure that barrier walls and parapets on bridges are Class "AA" concrete unless otherwise specified on the Plans.

621.2.01 Delivery, Storage, and Handling

General Provisions 101 through 150.

Delete Subsection 621.3.05 A -- and substitute the following:

621.3.05 Construction

A. Formed or SlipFormed Barrier

Ensure that the barriers are Class AA concrete as defined in Section 500 and are constructed according to Plan details.

1. Place the concrete using conventional forms or an approved self-propelled extrusion machine. When using forms, give the barrier a Type III finish, and cured according to Section 500.
1. Construct joints of the type and at the locations specified on the Plans.
   a. When emergencies interrupt placement, the Engineer will decide whether to allow a construction joint and will direct where and how to construct the joint.
   b. Joints may be sawed or formed. If the joint is sawed within 24 hours of placement to at least 3 in (75 mm) deep using a template, immediately remove the following material:
      - Material that may damage the adjacent concrete by blocking the sawed joint
      - Material that may prevent later operation or cleaning after the sawing operation is complete
   c. Saw the joints through the footing.
2. The outside vertical face of the side barrier or parapet may be battered as directed by the Engineer. Radii, as approved by the Engineer, may be used at intersecting surfaces of the barrier.

Make approved requested changes at no cost to the Department.

Georgia Department of Transportation

Technical Provisions

For

Design-Build Agreement

P.I. No. 0010212

Attachment 4-1

ENVIRONMENTAL COMMITMENTS TABLE

ENVIRONMENTAL COMMITMENTS TABLE
PI#: 0010212, County: Hall

Date Updated: 3/14/2019 | Stage: CE Approval
Transmittal Date for Plans Reviewed by OES (if applicable): 7/5/2018

Review			
If no commitments, NEPA may approve for all.	The GDOT project manager (PM) asserts that these commitments are feasible. GDOT PM: [signature] Signature/Date: 3/14/19	The engineer of record (EOR) asserts that plans incorporate or will incorporate commitments if applicable. EOR Mac Crawford, PE Signature/Date Mac Crawford PE 3-13-19	Air/Noise: ADT 12/17/18 Arch: LWF 12/17/18 Eco: TRS 12/18/18 Hist: CC 3/14/19 NEPA: DB 3/19/19

A. Resources to be Delineated on the Plans and/or Listed in the Environmental Resource Impact Table (ERIT)

Resource Name		Permitted Construction Activity	Refer to	Name and Date of Report or Transmittal	Correctly Shown?	
					Plan Sheet	ERIT
A-1	Open Water (OW) 1 (Chattahoochee River/Lake Lanier)	0.08 acre permanent fill, 1.94 acres temporary cofferdam/dewatering device impact	B-1, C-1	Ecology Resource Survey and Assessment of Effects Report October 2018	Yes	No
A-2	OW 1 Buffer	25-foot buffer; areas within 100 feet of the proposed bridge area exempt; non-exempt buffer impacts anticipated	B-1	"	Yes	No
A-3	Intermittent Stream (IS) 2	No activity	-	"	Yes	No
A-4	IS 2 Buffer	25-foot buffer; no activity	-	"	Yes	No
A-5	Listed Species	Roadway and bridge construction and demolition such that harm to listed species is avoided	B-1	"	Not req'd	No
A-6	GDOT Bridge No. 139-0020-0	Demolition	-	Historic Assessment of Effects August 28, 2018	No	No

B. Special Provisions (Attach all special provisions with transmittal letters to the commitments table, if available)

Special Provision		Purpose	Est. Cost	SP's Latest Date
B-1	SP 107.23H	For the protection of listed species	Negligible	10/26/2018

C. ERIT Comments and Design Features (Description: For ERIT Comments, provide exact wording for the comments section of the ERIT)

ERIT Comment or Design Feature		Description	Est. Cost	Correctly Shown?
C-1	ERIT Comment	Permanent impacts to OW 1 were calculated based on placement of five concrete bents (15-foot radius) within OW 1 as shown in the costing plans. Temporary impacts to OW 1 were calculated to include both the existing SR 53 westbound bridge, the proposed westbound bridge, and the area between the two bridges as shown in the costing plans. It was anticipated that work within OW 1 would take place from a barge and no temporary work bridge or rock jetties would be required. If another method is used, it is the responsibility of the Design Build Team to reassess impacts and acquire necessary permits.	Negligible	No

Estimated Costs are for planning purpose only, in current dollars as of date updated.

D. Necessary Permits, Buffer Variances and Mitigation Credits

Permit, Variance, etc.		*Add'l Info (permit expiration date, number of credits needed, etc…)*	*Est. Cost*	*Acquired?*
D-1	Notice of Intent (NOI) for NPDES	~~The Office of Bidding Administration and Construction Contractor will submit a NOI to the NPDES General Permit following award of the contract but prior to construction.~~	Negligible	Will be acquired by Design Build Team
D-2	USACE Section 404 Regional Permit 32	To be acquired by the Design Build Team	Negligible	Will be acquired by Design Build Team
D-3	Buffer Variance	To be acquired by the Design Build Team	Negligible	Will be acquired by Design Build Team

E. Other Commitments or Requirements (Status: Pre- and Post – Complete or Incomplete; During – Signature Req'd)

Pre-, During, or Post		*Commitment*	*Responsible party*	*Est. Cost*	*Status*
E-1	Pre-Construction	Prior to project implementation, GDOT will make GDOT Bridge No. 139-0020-0 available for an alternative use.	GDOT Office of Environmental Services	Negligible	Complete – Advertising began 3/14/2019
E-2	Pre-Construction	Prior to project implementation, GDOT will record GDOT Bridge No. 139-0020-0 with representative views depicting the existing westbound bridge in high resolution, 10 megapixel digital photography. The photography and accompanying documentation will be completed per GDOT and SHPO's Guidelines for Establishing a Permanent Archival Record. A physical description and a short summary of the historical importance of GDOT Bridge No. 139-0020-0 will be included with the photographic documentation. The documentation will be submitted to the SHPO for acceptance and retention.	GDOT Office of Environmental Services	Negligible	Incomplete
E-3	Pre-Construction	GDOT will produce a written narrative to include the history and development of Lake Lanier and its bridges, the relationship the bridges at Lake Lanier have with the lake, a description of the surrounding area prior to the creation of Lake Lanier, and an analysis of the lake's impact on the surrounding area. A draft copy of the context will be submitted to SHPO and the USACE for review and comment. A copy of this narrative will be provided to the SHPO and the USACE for their records, as well as to relevant historical societies and historical collections in Forsyth and Hall Counties.	GDOT Office of Environmental Services	Negligible	Incomplete
E-4	During Construction	Following final design, the Environmental Stewardship Program (ESP) model is to be coordinated with the USACE.	GDOT	TBD	Signature Req'd _____

Estimated Costs are for planning purpose only, in current dollars as of date updated.

Total Estimated Cost	TBD

If Project is Complete or Under Construction, Area or Construction Engineer affirms that all Special Provisions, Plan Notes and During Construction Commitments were or are being adhered to during the project's construction.

Please Print Name and Title: _____ *Signature*: _____ Date: _____ *Please provide an explanation if unable to sign.*

Estimated Costs are for planning purpose only, in current dollars as of date updated.

Georgia Department of Transportation

Technical Provisions

For

Design-Build Agreement

P.I. No. 0010212

Attachment 4-2

SECTION 107 – LEGAL REGULATIONS AND RESPONSIBILITY TO THE PUBLIC

107.23.H Protection of Federally Protected Species

DEPARTMENT OF TRANSPORTATION
STATE OF GEORGIA

SPECIAL PROVISION

PROJECT: SR 53 over Chattahoochee River

PI No. 0010212, Hall County
Section 107 – Legal Regulations and Responsibility to the Public

---

Add the following to Subsection 107.23:

H. Protection of Federally Protected Species

The following conditions are intended as a minimum to protect these species and their habitat during any activities that are in close proximity to the known location(s) of these species.

1. All personnel employed on this Project shall be notified about the potential presence, appearance, and habitat of the federally protected Indiana bat (*Myotis sodalis*) and northern long-eared bat (*Myotis septentrionalis*), which are protected under the Endangered Species Act (ESA) of 1973. All personnel shall be advised that there are civil and criminal penalties for harassing, harming, pursuing, hunting, shooting, wounding, killing, capturing, or collecting these species in knowing violation of the federal ESA of 1973. Additionally, all bats are protected under Georgia state law (Official Code of Georgia § 27-1-28). Pictures and habitat information will be provided to the Contractor at the Preconstruction Conference and shall be posted in a conspicuous location in the Project field office until such time that Project construction has been completed and time charges have stopped. If a project field office is not present, a copy of the pictures and habitat information shall be supplied to the Project personnel to be kept on the Project during construction.

2. One of the following two options shall be employed to prevent impacts to federally protected bats on the existing SR 53 WB Bridge over Chattahoochee River/Lake Lanier (OW 1).

   Option 1: Bridge demolition activities shall not take place between the dates of April 1 and October 15.

   Option 2: If demolition activities take place between the dates of April 1st – October 15th, an ecologist prequalified in Area Class 1.06(h) shall be employed to conduct an inspection of the bridge prior to the start of demolition.

   (a) The contract ecologist shall inspect the entirety of the bridge no more than fourteen (14) days prior to the scheduled start of demolition activities.

   (b) If the contract ecologist observes roosting bats or signs of bat roosting on the structure, then he/she shall notify the Engineer immediately, who in will notify the State Environmental Administrator, Georgia Department of Transportation, Office of Environmental Services at (404) 631-1101. Demolition activities on the bridge will not begin until a site visit has been conducted by the US Fish and Wildlife Service and/or Georgia Department of Natural Resources and/or their designated representative. Pending the outcome of the site visit, the work may need to be delayed until after October 15th or, if necessary, until after consultation under Section 7 of the ESA is completed.

(c) If the contract ecologist does not observe roosting bats or signs of bats roosting on the structure, then demolition activities on the bridge may proceed.

(d) The contract ecologist shall document the findings of his/her inspection by completing a Georgia Bats in Bridges Datasheet inspection form. Within two (2) business days of completing the inspection, the contract ecologist shall submit a copy of the inspection form to the State Environmental Administrator via the Ecology Submittals Inbox (Ecology_Submittals@dot.ga.gov). The email shall be formatted with the title "Inspection Report PI # 0010212". The State Environmental Administrator in turn will provide the inspection for US Fish and Wildlife Service, Georgia Department of Natural Resources, and the lead Federal Agency within five (5) business days of receipt.

3) All clearing of woody vegetation within the project limits (STA. 14+00 to 41+00) shall occur outside of the summer activity period of the federally protected Indiana bat and northern long-eared bat, which begins April 1st and ends October 15th. A log shall be kept detailing the beginning and ending dates of all clearing of woody vegetation within the station numbers listed above. The log shall be signed by the Contractor and Engineer prior to the occurrence of clearing. Following project completion, the log shall be submitted to the Engineer and the State Environmental Administrator, Georgia Department of Transportation, Office of Environmental Services via the Ecology Submittals Inbox (Ecology_submittals@dot.ga.gov). The email shall be formatted with the title "PI # 0010212: Tree Clearing Log".

4) Temporary lighting shall be directed away from the forested areas during any Project activities conducted between dusk and dawn from April 1st through October 15th. Downward-facing, full cut-off lens lights shall be used.

5) The use of borrow sites or stockpiles of dirt within 200 feet of Chattahoochee River/Lake Lanier (OW 1) is prohibited for protection of the Indian bat and northern long-eared bat. Stockpiled materials shall be placed at least 200 feet away from the Chattahoochee River/Lake Lanier (OW 1) to minimize the potential for stormwater runoff into the lake. All disturbed soil and excavation spoil within 200 feet of Chattahoochee River/Lake Lanier (OW 1) shall be mulched daily or covered with erosion control mats.

6) Equipment staging areas and equipment maintenance areas (particularly for oil changes) shall be located at least 200 feet from Chattahoochee River/Lake Lanier (OW 1) to minimize the potential for wash water, petroleum products, or other contaminants from construction equipment entering the lake for the protection of the Indiana bat and northern long-eared bat.

7) Fertilizers shall only be used while grassing graded areas to achieve site stabilization.

8) When working on the bridge, sightings of bat species shall be reported immediately to the Engineer who in turn will notify the State Environmental Administrator, Georgia Department of Transportation, Office of Environmental Services at (404) 631-1101. All construction activity on the structure, except traffic control and erosion control, shall cease pending consultation by the Department with US Fish and Wildlife Service and/or the Georgia Department of Natural Resources and/or the lead Federal Agency.

9) The Engineer shall be notified immediately in the event of an erosion control failure that allows discharge of sediment into Chattahoochee River/Lake Lanier (OW 1). The Engineer, in turn, shall notify the State Environmental Administrator, Georgia Department of Transportation, Office of Environmental Services at (404) 631-1101.

10) In the event any incident occurs that causes harm or injury to the northern long-eared bat or Indiana bat, the Engineer shall be immediately be notified and will in turn notify the State Environmental Administrator, Georgia Department of Transportation, Office of Environmental Services at (404) 631-1101. All activity, with

the exception of traffic control and erosion control, shall cease pending consultation by the Department with the US Fish and Wildlife Service, Georgia Department of Natural Resources, and/or the lead Federal Agency.

11) The Contractor shall keep a log detailing any incidents that cause harm or injury to northern long-eared bats or Indiana bats in or adjacent to the Project until such time that project construction has been completed and time charges have stopped. Following Project completion, the log and a report summarizing any incidents that caused harm or injury to these species shall be submitted by the Contractor to the Engineer and the State Environmental Administrator, Georgia Department of Transportation, Office of Environmental Services, via the ecology submittals inbox (ecology_submittals@dot.ga.gov) with the PI number in the subject line of the email. GDOT in turn will provide copies of the report to the U.S. Fish and Wildlife Service, the Georgia Department of Natural Resources Wildlife Resources Division, and the lead Federal Agency.

12) Within 30 days of the completion of the Project and the stopping of time charges, a report shall be provided to the State Environmental Administrator via the Ecology Submittals Inbox (Ecology_submittals@dot.ga.gov). The Department, in turn, will provide copies of the report to the US Fish and Wildlife Service, Georgia Department of Natural Resources, and the lead Federal Agency. The following information will be included in the report:

    a) Contractor name and address

    b) Name and title of the report preparer

    c) GDOT Project Identification (PI) Number

    d) County(ies) in which the Project is located

    e) Project description

    f) Project start and end dates

    g) Description of any sightings of bat species when working on bridges. This should include incidents that were reported as required under 107.23H.

13) All costs pertaining to any requirement contained herein shall be included in the overall bid submitted unless such requirement is designated as a separate Pay Item in the Proposal.

Protected Species On This Project

Northern Long-Eared Bat (*Myotis septentrionalis*)

Photo Credit: Al Hicks

Description:

* Adults are medium-sized with a body length of 3 to 3.7 inches and a wing span of 9 to 10 inches.
* Fur color can be medium to dark brown on the back and tawny to pale-brown on the underside.
* As its name suggests, this bat is distinguished by its long ears, particularly as compared to other bats in its genus, *Myotis*.
* During spring and summer months bats emerge from roost trees or structures at dusk and forage until dawn.

Habitat:

During spring and summer months within Georgia, northern long-eared bats will roost singly or in colonies underneath bark, in cavities, or in crevices of both live and dead trees. Males and non-reproductive females may also roost in cooler places, like caves and mines. It has also been found, rarely, roosting in structures like barns and sheds. Prime foraging habitat consists of the understory of forested hillsides and ridges. Northern long-eared bats also feed on insects over vegetation and water surfaces.

Harming, harassing or killing this animal can lead to fines or jail time. See Special Provision 107.23 H.

Protected Species On This Project

Indiana Bat (*Myotis sodalis*)

Photo Credit: Adam Mann

Description:

* Adults are small with a body length up to 2 inches and a wing span of 9 to 11 inches.
* Their body is covered with dark brown to black fur.
* During spring and summer months bats emerge from roost trees at dusk and forage until dawn.

Habitat:

During spring and summer months within Georgia Indiana bats utilize forested areas to forage and form maternity colonies. Prime foraging habitat consists of forest edges, forest gaps, stream corridors, and edges of lakes and ponds. Female bats select live or dead trees with excellent sun exposure which exhibit loose, peeling, or shaggy bark in order to form maternity colonies and rear young.

Harming, harassing or killing this animal can lead to fines or jail time.
See Special Provision 107.23 H.

State protected species on the Project

Bats

- There are 16 bat species in GA; all are protected under state law
- Most bat species are insectivorous — a single bat can eat up to 1,200 mosquitoes/hr
- Bats have declined significantly in recent years, primarily due to habitat loss

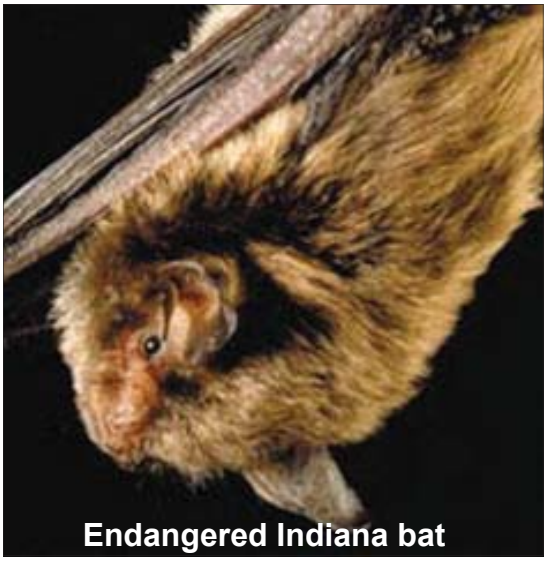

Endangered Indiana bat

Bats roosting in crevices between transverse concrete beams under a bridge

Disturbance to roost sites in the summer months could cause adults to abandon young which have not yet learned to fly

- In GA, about 1 of 10 bridges provides roosting habitat for bats
- Staining and strong smell indicate presence of bats

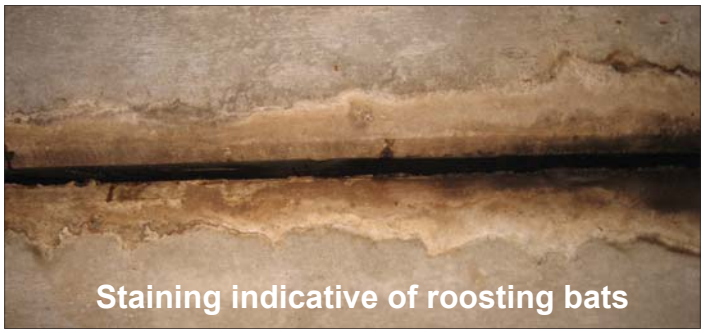

Staining indicative of roosting bats

There are civil and criminal penalties for harming or killing bats. See Special Provisions 107.23H

Georgia Department of Transportation

Technical Provisions

For

Design-Build Agreement

P.I. No. 0010212

Attachment 5-1

RIGHT OF WAY

(Existing Right of Way and Required Right of Way)

DEPARTMENT OF TRANSPORTATION
STATE OF GEORGIA

RIGHT OF WAY OF PROPOSED
SR 53 WESTBOUND BRIDGE REPLACEMENT
OVER CHATTAHOOCHEE RIVER
HALL COUNTY

FEDERAL AID PROJECT

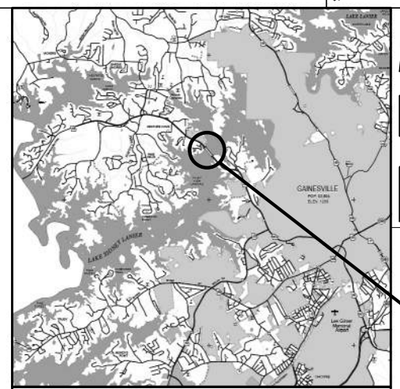

LOCATION SKETCH

PROJECT LOCATION

NOTE: THE CO-ORDINATES LISTED ARE WEST ZONE GRID CO-ORDINATES BASED ON THE GA. STATE PLANE CO-ORDINATE SYSTEM OF 1984.
HORIZONTAL DATUM : NAD 1983
VERTICAL DATUM : NAVD 1988

STATE ROUTE No.: 53
P.I. No.: 0010212

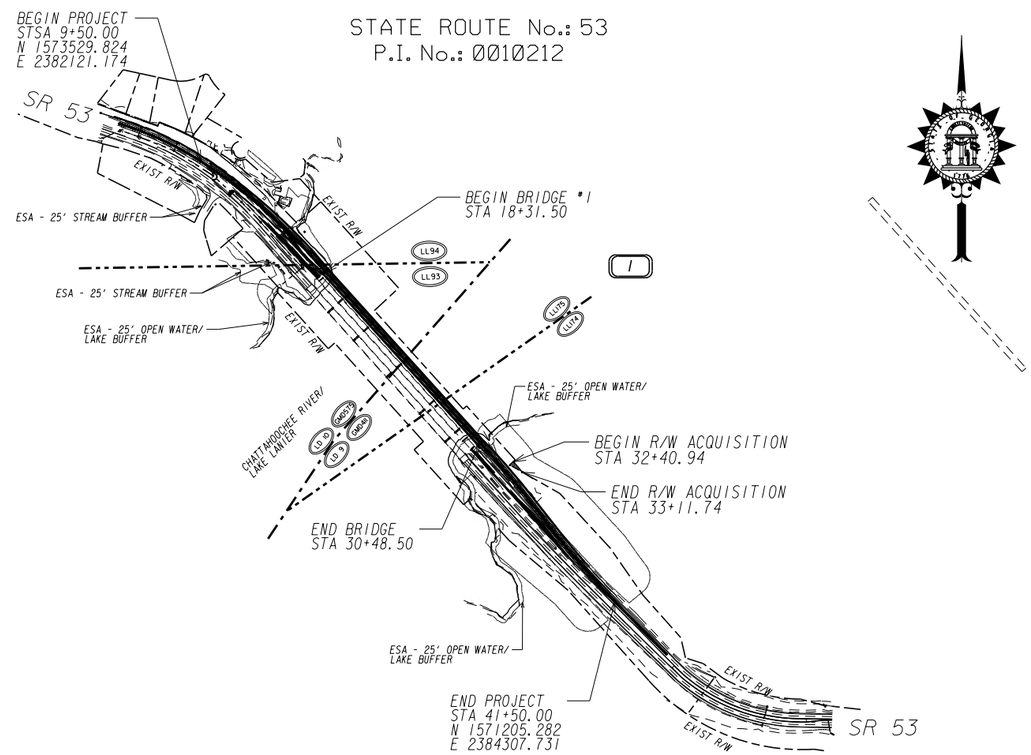

CONVENTIONAL SIGNS

STATE OR COUNTY LINE
CITY LIMIT LINE
LAND LOT LINE
PROPERTY LINE
SURVEY OR BASE LINE
RIGHT OF WAY LINE
- EXISTING
- REQUIRED
- LIMIT OF ACCESS
- REQD R/W & LIMIT OF ACCESS
- R/W MARKERS

FENCE
RAILROAD
POWER LINE
TELEPHONE LINE
POWER/UTILITY POLES
LIGHT POLES

PLANS PREPARED BY
RS&H

UNDER THE SUPERVISION OF

OFFICE OF INNOVATIVE PROGRAM DELIVERY

APPROVED:
TROY D. BYERS STATE RIGHT OF WAY ADMINISTRATOR — DATE
LOCATION AND DESIGN APPROVAL DATE:
PLANS COMPLETED DATE: SEPTEMBER 19, 2017
REVISIONS:

DRAWING No.
60-0001

MID-POINT COORDINATES
STA: 25+50.00
NORTHING: 1572413.598
EASTING: 2383260.107

PI NUMBER 0010212
HALL COUNTY

SCALE IN FEET
0 400 800 1600

LENGTH OF RIGHT OF WAY PROJECT	HALL COUNTY NO. 139
	MILES
NET LENGTH OF RIGHT OF WAY	0.013
NET LENGTH OF BRIDGES	0.230
NET LENGTH OF EXCEPTIONS	0.000
GROSS LENGTH OF RIGHT OF WAY	0.013

THIS PROJECT IS LOCATED 100% IN HALL COUNTY AND CONGRESSIONAL DISTRICT NO. 9.

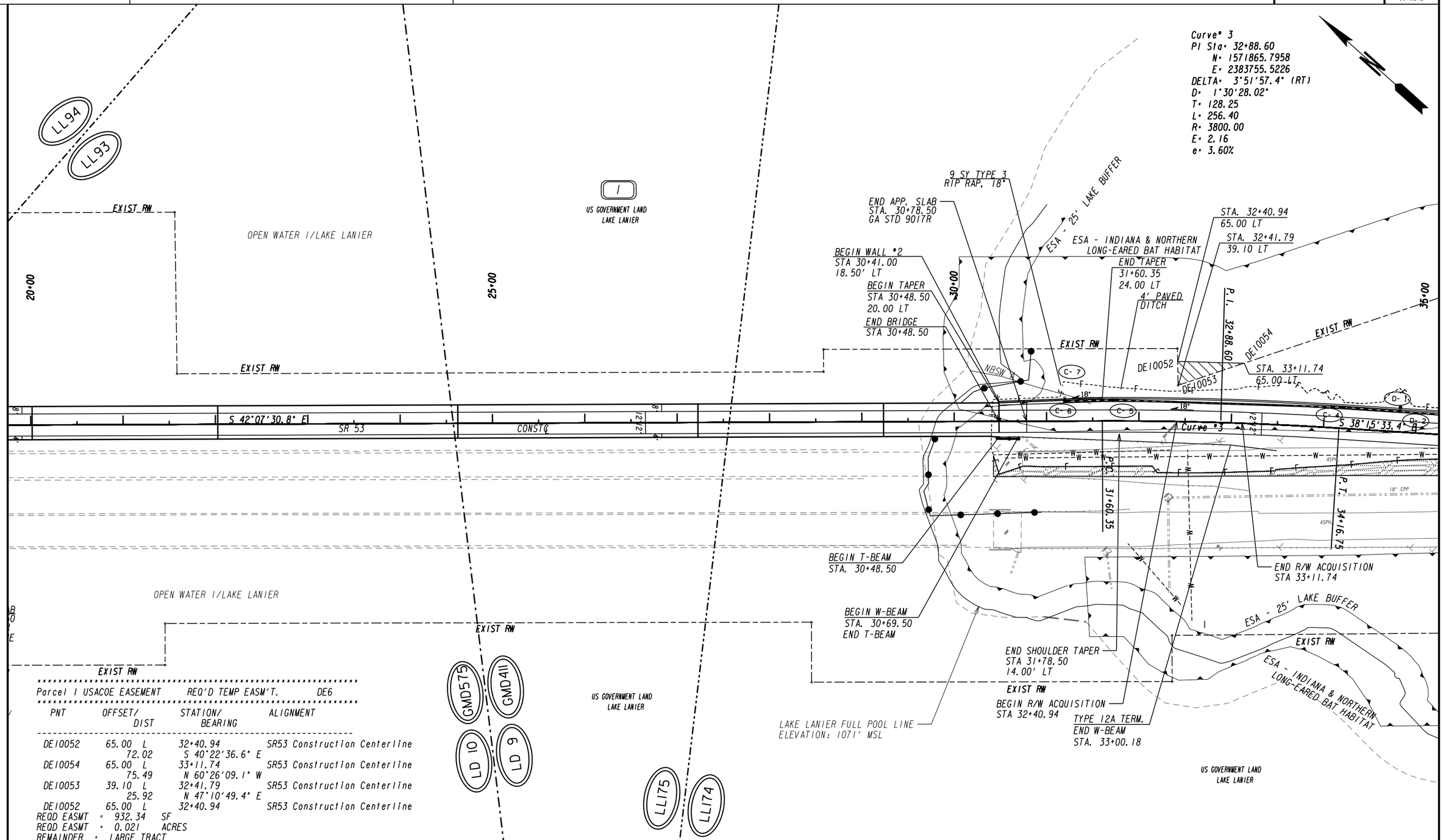

Parcel I USACOE EASEMENT REQ'D TEMP EASM'T. DE6

PNT	OFFSET/ DIST	STATION/ BEARING	ALIGNMENT
DE10052	65.00 L	32+40.94	SR53 Construction Centerline
	72.02	S 40°22'36.6" E	
DE10054	65.00 L	33+11.74	SR53 Construction Centerline
	75.49	N 60°26'09.1" W	
DE10053	39.10 L	32+41.79	SR53 Construction Centerline
	25.92	N 47°10'49.4" E	
DE10052	65.00 L	32+40.94	SR53 Construction Centerline

REQD EASMT = 932.34 SF
REQD EASMT = 0.021 ACRES
REMAINDER = LARGE TRACT

PROPERTY AND EXISTING R/W LINE
REQUIRED R/W LINE
CONSTRUCTION LIMITS
EASEMENT FOR CONSTR & MAINTENANCE OF SLOPES
EASEMENT FOR CONSTR OF SLOPES
EASEMENT FOR CONSTR OF DRIVES

BEGIN LIMIT OF ACCESS.....BLA
END LIMIT OF ACCESS.....ELA
LIMIT OF ACCESS
REQ'D R/W & LIMIT OF ACCESS

SCALE IN FEET
0 50 100 200

DATE	REVISIONS	DATE	REVISIONS

STATE OF GEORGIA
DEPARTMENT OF TRANSPORTATION

RIGHT OF WAY MAP

PROJECT NO:0010212
COUNTY: HALL
LAND LOT NO:93, 94, 174 & 175
LAND DISTRICT:9 & 10
GMD 411 & 575
DATE 09/19/17 SH2 OF2

DRAWING No. 60-0002

Georgia Department of Transportation

Technical Provisions

For

Design-Build Agreement

P.I. No. 0010212

Attachment 6-1

LEGAL REGULATIONS AND RESPONSIBILITY TO THE PUBLIC

SS 107 Legal Regulations and Responsibility to the Public

First Use: June 2016

DEPARTMENT OF TRANSPORTATION STATE OF GEORGIA

SUPPLEMENTAL SPECIFICATION

Section 107 – Legal Regulations and Responsibility to the Public

Delete Section 107 and Substitute the following:

107.01 Laws to Be Observed

The Contractor shall keep fully informed of all Federal and State laws, all local laws, ordinances, codes, and regulations and all orders and decrees of bodies or tribunals having any jurisdiction or authority, which in any manner affect those engaged or employed on The Work, or which in any way affect the conduct of The Work. The Contractor shall at all times observe and comply with all such laws, ordinances, codes, regulations, orders, decrees, and permits; and shall protect and indemnify the Department and its representatives against any claim or liability arising from or based on the violation of any such law, ordinance, code, regulation, order, decrees, and permits, whether by himself, his employees, subcontractors, or agents.

107.02 Permits and Licenses

The Contractor shall procure all permits and licenses, pay all charges, taxes, and fees, and give all notices necessary and incidental to the due and lawful prosecution of The Work.

107.03 Patented Devices

If the Contractor employs any design, device, material, or process covered by letters of patent or copyright, he shall provide for such use by suitable legal agreement with the patentee or owner. The Contractor and the Surety shall indemnify and save harmless the Department from any and all claims for infringement by reason of the use of any such patented design, device, material, or process, or any trademark or copyright, and shall indemnify the Department for any costs, expenses, and damages which it may be obliged to pay by reason of any infringement, at any time during the prosecution or after the completion of The Work.

107.04 Restoration of Surfaces Opened By Permit

The right to construct or reconstruct any utility service in the highway or street and to grant permits for the same at any time, is expressly reserved by the Department for the proper authorities of the municipality or county in which The Work is done and the Contractor shall not be entitled to any damages either for the digging up of the street or highway, or for any delay occasioned thereby.

Any individual, firm, or corporation wishing to make an opening in the street or highway must secure a permit from the Department. The Contractor shall allow parties bearing such permits, and only those parties, to make openings in the street or highway. When ordered by the Engineer, the Contractor shall make in an acceptable manner all necessary repairs due to such openings and such necessary work will be paid for as Extra Work, or as provided in the Specifications, and will be subject to the same conditions as original work performed.

107.05 Federal-Aid Provisions

When the United States Government pays all or any part of the cost of a project, the Federal laws and the rules and regulations made pursuant to such laws must be observed by the Contractor, and The Work shall be subject to the

inspection of the appropriate Federal agency. Such inspection shall in no sense make the Federal Government a party to this Contract and will in no way interfere with the rights of either party hereunder.

107.06 Sanitary Provisions

The Contractor shall provide and maintain in a neat, sanitary condition such accommodations for the use of his employees as may be necessary to comply with the requirements of the State Department of Health and other authorities having jurisdiction, and shall permit no public nuisance.

107.07 Public Convenience and Safety

The Contractor shall at all times so conduct The Work as to assure the least possible obstruction of traffic. The safety and convenience of the general public and the residents along the highway and the protection of persons and property shall be provided for by the Contractor as specified under Subsection 104.05, Subsection 107.09, Section 150, the Project Plans, and Special Provisions.

Traffic whose origin and destination is within the limits of the Project shall be provided ingress and egress at all times unless otherwise specified in the Plans or Special Provisions. The ingress and egress includes entrance and exit via driveways at the various properties, and access to the intersecting roads and streets. The Contractor shall maintain sufficient personnel and equipment on the project at all times, particularly during inclement weather, to ensure that ingress and egress are provided when and where needed.

Two-way traffic shall be maintained at all times unless otherwise specified or approved. The Contractor shall not stop traffic without permission granted by the Engineer.

All equipment used on The Work shall come equipped with factory-installed mufflers, or manufacturer's recommended equivalent, in good condition. These mufflers shall be maintained in good condition throughout the construction period.

107.08 Railroad-Highway Provisions

All work to be performed by the Contractor on a railroad company's right-of-way or property shall be done in a manner satisfactory to the chief engineer of the railroad company, or his authorized representative, and shall be performed at such times and in such manner as not to unnecessarily interfere with the movement of trains or traffic upon the track of the railroad company. The Contractor shall use all reasonable care and precaution in order to avoid accidents, damage, or unnecessary delay or interference with the railroad company's trains or other property, or property of tenants of railroad company.

The Contractor shall notify the railroad company and obtain its approval before commencing work on the railroad company's right-of-way or property.

The Contractor shall determine what measures are required by the railroad company to protect its operations and right-of-way or property during construction. Such protection may include the use of a flagger or flaggers provided by the railroad company. The Contractor shall be responsible for ensuring that the required protection is provided and shall pay the railroad company directly for any and all such services which may be required to accomplish the construction unless otherwise specified.

Any temporary grade crossings or other means needed during construction by the Contractor for transporting materials of any nature and/or equipment across the railroad tracks will be the responsibility of the Contractor to handle directly with the railroad company and bear all costs incidental to such crossings including flagging services provided by the railroad company.

A "Special Provisions for the Protection of Railroad Interests" may be included in the proposal to stipulate insurance and other requirements of the railroad company.

107.09 Barricades and Danger, Warning, and Detour Signs

The Contractor shall furnish, install, and maintain all necessary and required barricades, signs, and other traffic control devices in accordance with these Specifications, Project Plans, Special Provisions, and the MUTCD, and take all necessary precautions for the protection of the work and safety of the public.

Unless otherwise specified, all traffic control devices furnished by the Contractor shall remain the property of the Contractor.

107.10 Forest Protection

In carrying out work within or adjacent to State or National Forests, or any other forests, parks, or other public or private lands, the Contractor shall obtain necessary permits and comply with all of the regulations of the appropriate authorities having jurisdiction over such forest, park, or lands. The Contractor shall keep the areas in an orderly condition, dispose of all refuse, obtain permits for the construction and maintenance of all construction camps, stores, warehouses, residences, latrines, cesspools, septic tanks, and other structures in accordance with the requirements of the appropriate authority.

The Contractor shall take all reasonable precautions to prevent and suppress forest fires and shall require his employees and subcontractors, both independently and at the request of forest officials, to do all reasonably within their power to prevent and suppress and to assist in preventing and suppressing forest fires; to notify a forest official at the earliest possible moment of the location and extent of any fire seen by them; and to extinguish or aid in extinguishing nearby fires.

107.11 Construction Over or Adjacent to Navigable Waters

A. Navigation to Be Protected

Since navigable waterways are under the jurisdiction of the United States Coast Guard and/or the United States Army Corps of Engineers, all work done in, over, on or adjacent to such waters shall comply with their requirements. Free navigation shall not be impeded, and navigable depths shall be maintained.

The Contractor shall comply with permits issued by the United States Coast Guard and/or the United States Army Corps of Engineers, and the Contractor shall obtain and comply with other permits in accordance with the requirements of Subsection 107.02

Special Provisions for environmental protection may be included in the proposal to stipulate environmental commitments and other requirements.

B. Obstructions to be Removed

When the construction has progressed enough to permit removal, all falsework, piling and other obstructions shall be removed to the satisfaction of the Federal agency having jurisdiction. In all cases such clearing must be done thoroughly before The Work will be accepted by the Department.

107.12 Use of Explosives

When the use of explosives is necessary for the prosecution of The Work, the Contractor shall exercise the utmost care not to endanger life or property, and shall obey all State, Federal and other Governmental regulations applying to transportation, storage, use, and control of such explosives. The Contractor shall be completely responsible for any and all damage resulting from the transportation, storage, use, and control of explosives in the prosecution of The Work by the Contractor, the Contractor's agents, or employees; and shall hold the Department harmless from all claims of damages resulting in any manner therefrom.

The Contractor shall notify each public utility owner having structures or other installations, above or below ground, near the site of The Work of his intention to use explosives. Such notice shall be given sufficiently in advance to enable the utility owners to take such steps as they may deem necessary to protect their property from injury. Such notice shall not relieve the Contractor of responsibility for all damages resulting from his blasting operations.

All explosives shall be stored securely in compliance with all laws and ordinances, and all such storage places shall be clearly marked DANGEROUS EXPLOSIVES. Explosives and detonators shall be stored in separate storage facilities in separate areas. Where no laws or ordinances apply, locked storage shall be provided satisfactory to the Engineer, never closer than 1,000 ft (300 m) from any travel-road, building, or camping area.

In all cases where the transport, storage, or use of explosives is undertaken, such activities shall be controlled and directed by fully qualified representatives of the Contractor.

Whenever electric detonators are used, all radio transmitters shall be turned off within a radius of 500 ft (150 m). No blasting supplies shall be transported in vehicles with two-way radio unless the transmitter is turned off, or extra shielding precautions are taken. Appropriate signs shall be placed so as to give ample warning to anyone driving a vehicle equipped with two-way radio. Electrical detonators will not be used within 500 ft (150 m) of a railroad.

Submit a blasting plan to the Engineer a minimum of five working days prior to use of explosives that provides details of the proposed blasting plan, including, but not limited to, the type and amount of explosives, the shot sequence, the description of and distance to the closest inhabitable structure, and other information as requested by the Engineer. Submission of blasting plan does not relieve the contractor of the responsibility for the adequate and safe performance of the blasting.

107.13 Protection and Restoration of Property and Landscape

A. General Provisions

The Contractor shall be responsible for the preservation of all public and private property, crops, fish ponds, trees, monuments, highway signs and markers, fences, grassed and sodded areas, etc. along and adjacent to the highway, and shall use every precaution necessary to prevent damage or injury thereto, unless the removal, alteration, or destruction of such property is provided for under the Contract. The Contractor shall use suitable precaution to prevent damage to all underground structures, whether shown on the Plans or not, and shall protect carefully from disturbance or damage, all land monuments and property marks until the Engineer has witnessed or otherwise referenced their location and shall not move them until directed. The Contractor shall not willfully or maliciously injure or destroy trees or shrubs, and he shall not remove or cut them without proper authority.

The Contractor shall be responsible for all sheet piling, shoring, underpinning, etc., as may be required for the protection of abutting property, nearby buildings, streets, and the like.

The Contractor shall be responsible for all damage or injury to property of any character, during the prosecution of The Work, resulting from any act, omission, neglect, or misconduct in his manner or method of executing The Work, or at any time due to defective work or materials, and said responsibility will not be released until the Project shall have been completed and accepted.

When the Contractor's excavating operations encounter remains of prehistoric people's dwelling sites or artifacts of historical or archeological significance, the operations shall be temporarily discontinued. The Engineer will contact archeological authorities and the Office of Environmental Services to determine the disposition thereof. When directed by the Engineer, the Contractor shall excavate the site in such a manner as to preserve the artifacts encountered and shall remove them for delivery to the custody of the proper authorities. Such excavation will be considered and paid for as Extra Work.

When the Contractor's normal operations are delayed by such stoppage or extra work, an appropriate time extension will be granted.

The Contractor shall plan, coordinate, and prosecute the work so that disruption to personal property and business is held to a practical minimum.

No resident or business shall be denied vehicular access to their property for any length of time other than as determined by the Engineer is absolutely necessary. Where two or more existing driveways are present for a business, only one existing driveway shall be closed at any time. All construction areas abutting lawns and yards of residential or commercial property shall be restored promptly. Backfilling of each drainage structure or section of curb and gutter, sidewalk, or driveway shall be accomplished as soon as adequate strength is obtained. Finishing, dressing, and grassing shall be accomplished immediately thereafter as a continuous operation within each area being constructed with emphasis placed on completing each individual yard or business frontage. Care shall be taken to provide positive drainage to avoid ponding or concentration of runoff.

Handwork, including raking and smoothing, shall be required to ensure that roots, sticks, rocks, and other debris are removed in order to provide a neat and pleasing appearance. Grassing, when in season, shall immediately follow in order to establish permanent cover at the earliest date. If grassing is not in season, proper erosion control shall be installed and maintained.

The work described above shall be in addition to that required by Subsection 104.07, "Final Cleaning Up" and Subsection 105.16, "Final Inspection and Acceptance".

B. Erosion and Siltation Control

The Contractor shall take all necessary measures throughout the life of the Project to control erosion and silting of rivers, streams, and impoundments (lakes, reservoirs, etc.). Construction of drainage facilities as well as performance of other Contract work which will contribute to the control of erosion and siltation shall be carried out in conjunction with clearing and grubbing, and earthwork operations as stipulated in Section 161.

C. Pollution

The Contractor shall exercise every reasonable precaution throughout the life of the Contract to prevent pollution of rivers, streams or impoundments. Pollutants such as chemicals, fuels, lubricants, bitumens, raw sewage and other harmful waste shall not be discharged into or alongside rivers, streams, and impoundments, or into natural or manmade channels leading thereto. The Contractor shall also comply with the applicable regulations of other State and Federal departments and to all governmental statues relating to the prevention and abatement of pollution.

D. Insect Control Regulations

The Plant Pest Control Division of the U.S. Department of Agriculture and the Georgia State Department of Agriculture restrict the movement of certain items from areas infested with Japanese Beetles or Imported Fire Ants so as to prevent the spread of these pests to non-infested areas. Where insect infested areas are shown on the Plans, Contractors will control their operations in such a manner as to comply fully with the requirements of Section 155.

E. Reclamation of Material Pits and Waste Disposal Areas

Whenever or wherever the Contractor obtains material from a source or wastes material on an area other than within the Right-of-Way, regardless of the fashion, manner or circumstances for which the source or area is obtained, it shall be reclaimed in accordance with the requirements of Section 160.

F. Mailboxes

The property owner shall have the responsibility for removing and relocating the mailbox to an area outside construction limits.

The Engineer will mark a point for the relocation of the box. The stake should be set so that the location of the box will be convenient to both the mail carrier and the patron, yet not interfering with the proposed work. It may be necessary for the Engineer to confer with the Post Office serving the area.

The Contractor shall notify each affected owner, in writing, that their mailbox is in conflict with the proposed construction, that they have ten days to relocate the box and that, after the expiration of the 10 days' notice, if the owner has not relocated the box, it shall be removed by the Contractor and laid upon the owner's property, clear of the Right-of-Way.

Any cost to the Contractor for removing the mailboxes as stated above shall be included in the price bid for other items.

G. Failure to Comply

Failure of the Contractor to comply with any of the above provisions or to install erosion prevention items included in the Contract at the time specified, will be evidence of omission and neglect, and the Contractor will be liable for damages as outlined in Subsection 107.13.H below. Furthermore, the Engineer shall withhold payment on all Contract Items until such time as the Contractor complies in full with all of the aforesaid provisions.

H. Payment for Damages

When or where any direct or indirect damage or injury is done to public or private property by or on account of any act, omission, neglect, or misconduct in the execution of the Work, or in consequence of the nonexecution thereof by the Contractor, the Contractor shall restore, at his own expense, such property to a condition similar or equal to that existing before such damage or injury was done, by repairing, rebuilding or otherwise restoring as may be directed, or shall make good such damage or injury in an acceptable manner.

I. Compensation

All costs pertaining to any requirement contained herein shall be included in the overall Bid submitted unless such requirement is designated as a separate Pay Item in the Proposal.

107.14 Load Restrictions

It is hereby agreed between the Department and the Contractor that in the performance of The Work under the Contract, the following load restrictions and stipulations shall be in full force and effect during the life of the Contract:

A. Parties Affected

The load restrictions and stipulations contained herein shall be applicable to the equipment of the Contractor; each agent or subcontractor employed by the Contractor; and each person or persons, firm, partnership, corporation or any combination thereof, hauling materials, supplies or equipment to or on the Project, by or for the Contractor.

B. Within Project Limits

No hauling equipment which is loaded beyond those limits provided by State Law shall be permitted on any portion of the new or existing pavement structure except that such loads will be permitted on nonstabilized bases and subbases prior to placing roadway paving subject to the provisions of Subsection 107.17.

Axle loads and gross weight limits will be evaluated in accordance with current Georgia Law.

All damage caused by any equipment to any permanent installation or portion of The Work shall be promptly repaired by the Contractor at his expense. When it becomes necessary to cross existing pavement with excessive loads, the Contractor shall provide and remove, at his own expense, proper cushioning by means of earth blanket or otherwise as directed.

C. Outside Project Limits

All equipment users included in Subsection 107.14.A, above, operating equipment on roads outside the Project limits shall be governed by the following regulations:

1. No vehicle shall carry any load in excess of that specified by Georgia Law.
2. On County System roads the maximum total gross weight shall not exceed 56,000 lbs. (25,400 kg) unless a vehicle is making a pickup or delivery on such roads.
3. For a specific individual trip the above weight limitations may be exceeded provided a special permit is obtained from the Department for each such movement. A special permit will not relieve the Contractor of liability for damage that may result from such a movement. Refer to O.C.G.A §32-6-26 Weight of Vehicle and Load, SB54 (2011) for compliance with weight limitations and exceptions.
4. Authorized personnel of the Department of Public Safety shall be permitted to weigh each truck hauling material to the Project whenever the Department so desires. The owner of each truck shall instruct his operators to cooperate with and assist the truck weighers in every way possible.
5. A Certified Public Weigher operating under the provisions of Standard Operating Procedure 15 shall not dispatch any vehicle loaded with material to be incorporated into the Project when the gross vehicle weight exceeds the limit established by law.
6. Ready Mix Concrete trucks shall comply with load restrictions as specified in Laboratory Standard Operating Procedure 10, "Quality Assurance for Ready-Mixed Concrete Plants in Georgia."

D. Responsibilities

It will be the responsibility of the Contractor to advise his personnel, and all equipment users included in Subsection 107.14.A, as to the load restrictions and stipulations contained herein.

E. Excess Loads and Violations

If multiple violations assignable to a given Certified Public Weigher are occurring, that Certified Public Weigher may be suspended from weighing materials dispatched to Department of Transportation projects.

107.15 Responsibility for Damage Claims

The Contractor shall indemnify and save harmless the Department, its officers and employees, from all suits, actions, or claims of any character brought because of any injuries or damage received or sustained by any person, persons, or property on account of the operations of the said Contractor; or on account of or in consequence of any neglect in safe-guarding The Work; or through use of unacceptable materials in constructing The Work; or because of any act of omission, neglect or misconduct of said Contractor; or because of any claims or amounts recovered from any infringements of patent, trademark, or copyright; or from any claims or amounts arising or recovered under the Workmen's Compensation Act, or any other law, ordinance, order, or decree; and so much of the money due the said Contractor under and by virtue of his Contract as may be considered necessary by the Department for such purpose may be withheld for the use of the State; or, in case no money is due, his surety may be held until such suit or suits, action or actions, claim or claims for injuries or damages as aforesaid shall have been settled and suitable evidence to that effect furnished to the Department; except that money due the Contractor will not be withheld when the Contractor produces satisfactory evidence that he is adequately protected by public liability and property damage insurance.

107.16 Opening Sections of Project to Traffic

Whenever any bridge or section of roadway is in acceptable condition for travel, the Engineer may direct that it be opened to traffic, whether or not the opening was originally provided for, and such opening shall not be held to be in any way an acceptance of the bridge or roadway, or any part thereof, or as a waiver of any of the provisions of the Contract. Necessary repairs or renewals made on any section of the roadway or bridge thus opened to traffic under instructions from the Engineer, due to defective material or work, or to any cause other than ordinary wear and tear, pending completion and acceptance of the roadway, bridge, or other work, shall be done by the Contractor, without additional compensation. Also, the Contractor shall not receive additional compensation for completing the Work except as specified in Subsection 104.03.

If the Contractor is dilatory in completing shoulders, drainage structures, or other features of work, the Engineer may so notify him in writing and establish therein a reasonable period of time in which the Work should be completed. If the Contractor is dilatory, or fails to make a reasonable effort toward completion in this period of time, the Engineer may then order all or a portion of the Project opened to traffic. On such sections which are so ordered to be opened, the Contractor shall conduct the remainder of his construction operations so as to cause the least obstruction to traffic and shall not receive any added compensation due to the added cost of the Work by reason of opening such section to traffic.

On any section opened to traffic under any of the above conditions, whether stated in the Special Provisions or opened by necessity of Contractor's operations, or unforeseen necessity, any damage to the highway not attributable to traffic which might occur on such section (except slides) shall be repaired by the Contractor at his expense. The removal of slides shall be done by the Contractor on a basis agreed to prior to the removal of such slides.

107.17 Contractor's Responsibility for the Work

From the first day the Contractor begins work, or from the date Contract Time commences, whichever occurs first, until written final acceptance of the project by the Engineer, the Contractor shall have the charge and care thereof and shall take every precaution against injury or damage to any part thereof by the action of the elements or from any other cause, whether arising from the execution or from the non-execution of The Work. The Contractor shall rebuild, repair, restore, and make good all injuries or damages to any portion of The Work occasioned by any of the above causes before final acceptance and shall bear the expense thereof except that the Department may, in its discretion, reimburse the Contractor for the repair of damage to The Work due to unforeseeable causes beyond the control of and without the fault or negligence of the Contractor, including but not restricted to acts of God, of the

public enemy or of governmental authorities. The Contractor's responsibility for damages and injuries is defined in Subsection 104.05.A.

In case of suspension of work from any cause whatsoever, the Contractor shall be responsible for the Project and shall take such precautions as may be necessary to prevent damage to the Project, provide for normal drainage and shall erect any necessary temporary structures, signs, or other facilities at his expense.

107.18 Acquisition of Right-of-Way

Rights of Way for the project will be obtained by the Department, in coordination with local governments and others. However, the Contractor's access to the portions of the right-of-way may be restricted. Where such restrictions are known in advance to the Department they will be listed in the bid proposal. Delays to the progress of the Work may be encountered because of restricted access to portions of the right-of-way. When such delays occur, whether caused by restrictions listed in the bid proposal or restrictions that develop after the Contract is signed, the parties agree in executing the Contract that such delays do not constitute breach of the Contract. Delays in availability of right-of-way beyond those listed in the bid proposal, or that develop after the Contract has been signed, that impact the controlling Item or Items of the Work will not be charged against the Contract Time. Additional compensation for such delays shall not be paid, except as provided in Subsection 105.13, "Claims for Adjustments and Disputes," or Subsection 109.09, "Termination Clause." In the event the Department is unable to acquire right-of-way needed for the project, resulting in delay to or termination of the project, such situation will also be controlled by this Section, and will not constitute a breach of the Contract by the Department.

107.19 Personal Liability of Public Officials

In carrying out any of the provisions of the Contract or in exercising any power or authority granted to the Board, Commissioner, Chief Engineer, their agents and employees, by the Contract, there shall be no liability, either personally or as officials or representatives of the Department, it being understood that in all such matters they act solely as agents and representatives of the Department.

107.20 No Waiver of Legal Rights

Upon completion of The Work, the Department will expeditiously make final inspection and notify the Contractor of acceptance. Such final acceptance, however, shall not preclude or estop the Department from correcting any measurement, estimate, or certificate made before or after completion of The Work, nor shall the Department be precluded or estopped from recovering from the Contractor or his Surety, or both, such over-payment as it may sustain, or by failure on the part of the Contractor to fulfill his obligations under the Contract. A waiver on the part of the Department of any breach of any part of the Contract shall not be held to be a waiver of any other or subsequent breach.

The Contractor, without prejudice to the terms of the Contract, shall be liable to the Department for latent defects, fraud, or such gross mistakes as may amount to fraud, or as regards the Department's rights under any warranty or guaranty.

107.21 General Description

The Contractor shall designate, prior to beginning any work, a Worksite Utility Coordination Supervisor (WUCS) who shall be responsible for initiating and conducting utility coordination meetings and accurately recording and reporting the progress of utility relocations and adjustment work. Also, the WUCS shall prepare an Emergency Response Plan for the purpose of planning, training, and communicating among the agencies responding to the emergency. The WUCS shall be the primary point of contact between all of the Utility companies, the Contractor and the Department. The WUCS shall recommend the rate of reoccurrence for utility coordination meetings and the Engineer will have the final decision on the regularity for utility coordination meetings. In no case will utility coordination meetings occur less than monthly until controlling items of utility relocations and adjustment milestones are completed. The WUCS shall contact each of the utility companies for the purpose of obtaining information including, but not limited to, a Utility Adjustment Schedule for the controlling items of utility relocations and adjustments. The WUCS shall notify the appropriate utility company and/or

utility subcontractors and the Department of the status of controlling items of relocations and adjustment milestones as they are completed. The WUCS shall furnish the Engineer, for approval, a Progress Schedule Chart, immediately following the receipt of the Notice to Proceed unless otherwise specified, which includes the utility companies controlling items of work and other information in accordance with Section 108.03 or elsewhere in the Contract documents.

A. Qualifications

The WUCS shall be an employee of the Prime Contractor, shall have at least one year experience directly related to highway and utility construction in a supervisory capacity and have a complete understanding of the Georgia Utilities Protection Center operations, and shall be knowledgeable of the High-voltage Safety Act and shall be trained on the Georgia Utility Facility Protection Act (GUFPA). The Department does not provide any training on GUFPA but will maintain a list of the Georgia Public Service Commission certified training programs developed by other agencies. Currently the following companies offer approved GUFPA training programs:

Associated Damage Consultants
Phone: 706.234.8218 or 706.853.1362
Georgia Utility Contractors Association
Phone: 404.362.9995

Georgia Utilities Protection Center
Phone: 678.291.0631 or 404.375.6209
H B Training & Consulting
Phone: 706.619.1669 or 877.442.4282 (Toll Free)

The Prime Contractor is responsible for obtaining the GUFPA training for their employees. Questions concerning the Georgia Public Service Commission GUFPA training program should be directed to:

Georgia Public Service Commission
244 Washington St. SW
Atlanta, GA 30334-5701
404.463.9784

B. Ticket Status

During the utility coordination meetings the WUCS shall collect and maintain the Ticket Status information to determine the status of all locate requests within the project limits. This information will be used to assure those planning to use mechanized equipment to excavate or work within the project limits are prepared to begin work when they have reported or estimated beginning work. At points where the Contractor's or utility company's operations are adjacent to or conflict with overhead or underground utility facilities, or are adjacent to other property, damage to which might result in considerable expense, loss, or inconvenience, work shall not commence until all arrangements necessary for the protection thereof have been made.

C. Notice

The names of known utility companies and the location of known utility facilities will be shown on the Plans, or listed in the Subsurface Utility Engineering Investigation if performed or in the

Special Provisions; and the WUCS shall give 24-hour notice to such utility companies before commencing work adjacent to said utility facilities which may result in damage thereto. The WUCS shall further notify utility companies of any changes in the Contractor's work schedules affecting required action by the utility company to protect or adjust their facilities. Notice to the utility companies by the Department of the Award of Contract, under Subsection 105.06, shall not be deemed to satisfy the notice required by this paragraph. Furthermore, this 24-hour notice shall not satisfy or fulfill the requirements of the Contractor as stated in Chapter 9 of Title 25 of the Official Code of Georgia Annotated, known as the "Georgia Utility Facility Protection Act".

D. Agenda

The WUCS shall cooperate with the companies of any underground or overhead utility facilities in their removal and relocations or adjustment work in order that these operations may progress in a reasonable manner, that duplication of their removal and relocations or adjustment work may be reduced to a minimum, and services rendered by those parties will not be unnecessarily interrupted. To promote this effort the WUCS shall prepare an agenda for the utility coordination meetings and circulate same in advance of the meeting to encourage input and participation from all of the utility companies. The agenda will be prepared by an examination of the project site and may include photographs of potential/actual utility conflicts.

E. Emergency Response Plan

The WUCS shall prepare an Emergency Utility Response Plan (EURP) within 30 days following the receipt of the Notice to Proceed. The EURP shall indicate the project location (which includes street address and or major intersections / major highway route, if possible with a land mark) that would be reported in case of an emergency, WUCS, Emergency Utility Coordinator (EUC), utility company name, utility company emergency contact information to include but not limited to emergency phone number, response time for emergency, working condition of devices needed to facilitate prompt shut off, and primary point of contact name and phone number for the project.

Emergency Utility Coordinator (EUC) shall be an employee of the Prime Contractor and shall notify the appropriate utility company and/or utility subcontractors in case of an emergency. EURP must include the contact details of the EUC, if WUCS is not the primary emergency utility coordinator for this project.

The plan will also include a means of reporting emergencies and the Utility Emergency Response Information for each company. The WUCS/EUC shall post the EURP in an area readily accessible to the Department and project personnel. Also, WUCS shall distribute the copies of EURP by e-mail and hard copy to GA DOT Area Engineer, GA DOT Construction Project Engineer, Contractor's project manager, superintendent, and all approved sub-contractors whose work can be in conflict with utilities facilities, personnel of the each facility/owner/ operator who has facilities within the project limits and keep a copy in close proximity to active construction.

In the event of interruption to gas, water or other utility services as a result of accidental breakage or as a result of being exposed or unsupported, the WUCS/EUC shall promptly notify the appropriate emergency officials, the Georgia Utilities Protection Center and the appropriate utility facility company or operator, if known. Until such time as the damage has been repaired, no person shall engage in excavating or blasting activities that may cause further damage to the utility facility.

In order to keep up with the latest / most updated EURP contact information (name and phone numbers); WUCS shall include an item in the agenda of Utility Coordination meeting about the updates / changes in the EURP plan.

The Emergency Utility Response Plan and Emergency Utility Response Information template can be found at the State of Georgia, Office of Utilities Webpage.

F. Submission

Provisions for reporting all utility coordination meetings, the progress of utility relocation and adjustment work milestones and ticket status information will be reported on a form developed by the WUCS and will be distributed by the WUCS to all of the utility companies as milestones are met and shall be included as part of the project records. These reports shall be delivered to the Engineer for review, on a monthly basis. The WUCS shall immediately report to the Engineer any delay between the utility relocation and adjustment work, the existing Utility Adjustment Schedule, or the proposed Utility Adjustment Schedule so that these differences can be reconciled.

G. Delays

Delays and interruptions to the controlling Item or Items of The Work caused by the adjustment or repair of water, gas, or other utility appurtenances and property may be considered for an extension of Contract Time as provided in Subsection 108.07.E unless such delays are due to the negligence of the Contractor.

H. Facilities Supported on Bridges

If the utility facilities are to be supported on bridges, the following provisions shall apply:

1. The Plans will show the location of the facility and the auxiliary items necessary to support the facility.
2. The Contractor constructing the bridge shall install anchor bolts, thimbles, inserts, or other auxiliary items attached to the bridge as a part of the support for the utility facility. The Utility Company shall furnish these auxiliary items, unless the Contract indicates these items are to be furnished by the Contractor as a part of the bridge construction.
3. The Utility or its subcontractor constructing the utility facility shall install hanger rods, pipe rollers, and other attachments necessary for the support of the utility facility as indicated on the Plans. The Utility Company shall furnish these attachments at no cost to the Department or the prime contractor unless otherwise specified. This work shall also include:

a. Caulking the openings around the utility where it passes through endwalls to prevent the passage of undesirable materials.

b. Painting the exposed portions of utility supports unless such supports are corrosion resistant. Painting shall be done in accordance with the applicable portions of Section 535, unless otherwise specified.
4. The sequence of bridge construction work may be set forth in the Plans and/or the Special Provisions and will show at what stage of the Work a utility company will be allowed to make the utility installation. Further, all or any portion of The Work under Subsection 107.21.H.3 may be included in the bridge Contract by the Plans and/or the Special Provisions.
5. Any damage to the bridge structure caused by the utility installation shall be repaired to the satisfaction of the Engineer at the expense of the Utility or its subcontractor installing the utility facility.

I. Clearances
The Plans provide for at least minimum clearance of utilities as required by the National Electrical Safety Code, U.S. Department of Commerce, and National Bureau of Standards. Any additional clearance the Contractor may desire or require in performing The Work shall be arranged by the Contractor with the utility company. The Department will pay no extra compensation for such additional clearances.

J. Utility Relocation Progress Schedule
The purpose of the Utility Adjustment Schedule is to provide the Contractor with the pertinent information, including any utility staging required, dependent activities, or joint-use coordination that is required for the creation of a feasible progress schedule. A suitable Utility Adjustment Schedule form is available from the Department for the WUCS to circulate to utility companies for any proposed project construction staging or should a utility company not duly file a Utility Adjustment Schedule to the Department during the preconstruction phase of the project. The WUCS shall submit a Utility Relocation Progress Schedule showing together the Progress Schedule Chart referenced in Section 108.03 and the proposed Utility Adjustment Schedules from all utility companies to the Engineer for review and approval. Copies of existing Utility Adjustment Schedules with utility companies having facilities on this project will be made available at the Georgia Department of Transportation, Office of Construction Bidding Administration, located at One Georgia Center, 600 West Peachtree Street, NW, Atlanta, GA 30308, for examination by the Contractor. The Utility Adjustment Schedules are available on-line at: http://www.dot.ga.gov/doingbusiness/contractors/Pages/default.aspx

K. Compensation
There will be no separate measurement or payment for this Work. The cost associated with this Work shall be included in the overall Bid submitted.

107.22 Hazardous and/or Toxic Waste

When the Contractor's operations encounter or expose any abnormal condition which may indicate the presence of a hazardous and/or toxic waste, such operations shall be discontinued in the vicinity of the abnormal condition and the Engineer shall be notified immediately. The presence of barrels, discolored earth, metal, wood, or visible fumes, abnormal odors, excessively hot earth, smoke, or anything else which appears abnormal may be indicators of hazardous and/or toxic wastes and shall be treated with extraordinary caution as they are evidence of abnormal conditions.

The Contractor's operations shall not resume until so directed by the Engineer.

Disposition of the hazardous and/or toxic waste will be made in accordance with the requirements and regulations of the Department of Human Resources and the Department of Natural Resources. Where the Contractor performs work necessary to dispose of hazardous and/or toxic waste, payment will be made at the unit prices for pay items included in the contract which are applicable to such work or, where the contract does not include such pay items, payment will be as provided in Subsection 109.05, "Extra Work."

107.23 Environmental Considerations

A. Construction

Erosion control measures shall be installed, to the greatest practical extent, prior to clearing and grubbing. Particular care shall be exercised along stream buffers, wetlands, open waters and other sensitive areas to ensure that these areas are not adversely affected.

Construction equipment shall not cross streams, rivers, or other waterways except at temporary stream crossing structures shown on the plans or as allowed by permit.

Construction activities within wetland areas are prohibited except for those within the construction limits as shown on the Plans and as specified in Subsection 107.23.E.

All sediment control devices (except sediment basins) installed on a project shall, as a minimum, be cleaned of sediment when one half the capacity, by height, depth or volume, has been reached. Sediment basins shall be cleaned of sediment when one-third the capacity by volume has been reached.

B. Bridge Construction Over Waterways

Construction waste or debris, from bridge construction or demolition, shall be prevented from being allowed to fall or be placed into wetlands, streams, rivers or lakes.

Excavation, dewatering, and cleaning of cofferdams shall be performed in such a manner as to prevent siltation. Pumping from cofferdams to a settling basin or a containment unit will be required if deemed necessary by the Engineer.

Operations required within rivers or streams, i.e. jetting or spudding, shall be performed within silt containment areas, cofferdams, silt fence, sediment barriers or other devices to minimize migration of silt off the project.

C. Environmental Clearance of Local Material or Disposal Sites

Specific written environmental approval from the Engineer will be required for any local material or disposal sites not included in the Plans. No work shall be started at any potential local material or waste site not shown on the plans prior to receiving said environmental approval from the Engineer. Local material sites are defined as borrow pits, common borrow, base, embankment, sand clay base, topsoil base, soil cement base, granular embankment, asphalt sand, maintenance pits, or stockpiled borrow sources. Disposals sites, as defined in Standard Specification 201.3.05.E.3, may be defined as excess material, common fill, or inert waste.

The Contractor may obtain environmental approval on a site with one of two methods: 1) GDOT provided environmental surveys or 2) environmental surveys obtained by the Contractor at no cost to the Department. The Contractor must choose one method for review and approvals, which will apply to all sites required for a given project, and submit an Environmental Review Notification indicating their chosen method.

1. If the Contractor chooses to obtain their own environmental surveys, they shall be conducted by a consultant(s) prequalified to work with the Department in the following area classes: 1.06(b) – History;

1.06(e) – Ecology; and 1.06(f) – Archaeology. Background research and field methods shall be conducted in accordance with the Office of Environmental Services Environmental Procedures Manual, with documentation in an Environmental Survey Results Memorandum (template available from the Office of Environmental Services).

2. If the Contractor requests that GDOT conduct required environmental surveys, an Environmental Survey Request shall be submitted for each site (template available from the Office of Environmental Services).

Upon receipt of an Environmental Survey Request, the Office of Environmental Services shall provide environmental approval or denial within thirty (30) business days. Upon receipt of an Environmental Survey Results Memorandum, the Office of Environmental Services shall provide environmental approval or denial within ten (10) business days. The Department will not accept requests for review of sites before a Notice to Proceed is issued. Incomplete Survey Requests, surveys that are not conducted by a GDOT prequalified consultant, or surveys that do not meet the required level of field effort or documentation, will be denied by GDOT OES and may require resubmittal.

The Engineer will inform the Contractor in writing as to the approval or denial of environmental clearance. Approvals may be provided upon condition that an Environmentally Sensitive Area (ESA) be designated within or adjacent to the site prior to use. All ESA stipulations shall be adhered to in accordance with Standard Specification 107.23.F. If a site is denied, the Contractor may, at no expense to the Department, seek to obtain permits or pursue other remedies that might otherwise render the site(s) acceptable, if available. Any and all changes to proposed sites or their associated haul roads that are not included within the original Environmental Survey Request or Environmental Survey Results Memorandum, including expansion, utilization for purposes other than those indicated in the original submittal, etc. must be submitted for further environmental review and approval prior to use.

Sites included in the Plans have environmental clearance and shall be used only for the purpose(s) specified in the Plans or other contract documents. Should the Contractor wish to expand or utilize said sites for any purpose other than that provided for in the Plans or other contract documents, specific written environmental clearance as noted above shall be obtained.

D. Control of Pollutants

Pollutants or potentially hazardous materials, such as fuels, lubricants, lead paint, chemicals or batteries, shall be transported, stored, and used in a manner to prevent leakage or spillage into the environment. The Contractor shall also be responsible for proper and legal disposal of all such materials.

Equipment, especially concrete or asphalt trucks, shall not be washed or cleaned-out on the Project except in areas where unused product contaminants can be prevented from entering waterways.

E. Temporary Work in Wetlands Outside of the Construction Limits within the Right-of-Way and Easement Areas

Temporary work in wetlands (that are not delineated with orange barrier fence) will be subject to the following requirements:

1. Temporary work in wetlands shall be accomplished by using temporary structures, timber, concrete, soil with geotextile fabric, or other suitable matting. The area shall not be grubbed.
2. Soil matting shall be protected from erosion in accordance with the Specifications.
3. Whenever temporary work is required in Saltwater Marsh Wetlands, all temporary structures and/or matting shall be removed in their entirety prior to Final Acceptance of the Project. Matted and compressed soils shall be backfilled to their original ground elevation with material meeting the requirements of Section 212 – Granular Embankment.
4. Whenever temporary work is required in Freshwater Wetlands, all temporary structures and/or matting (exclusive of soil matting to be retained in the final roadway section) shall be removed in their entirety prior to Final Acceptance of the Project. Once the temporary materials have been removed, the area shall be covered by Excelsior or Straw blankets according to Section 713 of the Specifications. The grassing and ground preparation referenced in Subsection 713.3.03, "Preparation", will not be applicable to this Work.
5. The Engineer shall be notified so that a field inspection may be conducted to certify that the temporary materials were properly removed and that the area was properly restored. The Contractor shall be responsible for any corrective action required to complete this Work.
6. There will be no separate measurement or payment for this Work. The cost associated with this work shall be included in the overall Bid submitted.

F. Environmentally Sensitive Areas

Some archaeological sites, historic sites, wetlands, streams, stream and pond buffers, open waters and protected animal and plant species habitat within the existing/required Right-of-Way and easement areas may be designated as ENVIRONMENTALLY SENSITIVE AREAs (ESAs). These areas are shown on the applicable Plan sheets and labeled "ESA" (e.g. ESA – Historical Boundary, ESA – Wetland Boundary). The Department may require that some ESAs or portions thereof be delineated with orange barrier fence. The Contractor shall install, maintain, and replace as necessary orange barrier fence at ESAs as delineated in the Plan sheets.

The Contractor shall not enter, disturb, or perform any construction related activities, other than those shown on the approved plan sheets within areas designated as ESAs including ESAs or portions thereof not delineated with orange barrier fence. This includes but is not limited to the following construction activities: clearing and grubbing; borrowing; wasting; grading; filling; staging/stockpiling; vehicular use and parking; sediment basin placement; trailer placement; and equipment cleaning and storage. Also, all archaeological sites, historic sites, wetlands, streams, stream and pond buffers, open waters, and protected animal and plant species habitat that extend beyond the limits of existing/required Right-of-Way and easement areas shall be considered ESAs and the Contractor shall not perform any construction related activities (such as those listed above) within these areas or make agreements with property owners to occupy these areas for construction related activities (such as those listed above). The Contractor shall make all construction employees aware

of the location(s) of each ESA and the requirement to not enter or otherwise disturb these areas.

If the Contractor is found to have entered an ESA, either within or outside the project area, for any purpose not specifically shown on the approved plan sheets, the Department may, at its discretion, issue a stop work order for all activities on the project except erosion control and traffic control until such time as all equipment and other items are removed and the ESA is restored to its original condition.

However, should damage to an ESA occur as a result of the Contractor's action in violation of this section, and notwithstanding any subsequent correction by the Contractor, the Contractor shall be liable for any cost arising from such action, including but not limited to, the cost of repair, remediation of any fines, or mitigation fees assessed against the Department by another government entity.

G. Protection of Migratory Birds and Bats

The following conditions are intended as a minimum to protect migratory birds and bats during construction activities.

1. Project personnel shall be advised about the potential presence and appearance of federally protected migratory birds, including the barn swallow (*Hirundo rustica*), cliff swallow (*Petrochelidon pyrrhonota*), and eastern phoebe (*Sayornis phoebe*), and that there are civil and criminal penalties for harassing, harming, pursuing, hunting, shooting, wounding, killing, capturing, or collecting these species in violation of the Migratory Bird Treaty Act of 1918. The law protects adults, fledglings, nestlings, eggs, and active nests. All bats are protected under Georgia state law (Official Code of Georgia § 27-1-28), with some species protected under the federal Endangered Species Act of 1973. Pictures and habitat information shall be posted in a conspicuous location in the Project field office until such time that construction has been completed and time charges have stopped.

2. The demolition of existing bridge and culvert, the extension of existing culvert, and bridge maintenance activities on the underside of the bridge deck shall take place outside of the breeding and nesting season of phoebes, swallows and other migratory birds, which begins April 1 and extends through August 31, unless exclusionary barriers are put in place to prevent birds from nesting. For bridges, exclusionary barriers may be made of plastic, canvas or other materials proposed by the Contractor and approved by the State Environmental Administrator prior to installation. For box culverts, exclusionary barriers may be overlapping strips of flexible plastic (also called "PVC Strip Doors" or "Strip Curtains") or an alternate material proposed by the Contractor and approved by the State Environmental Administrator prior to installation. Exclusionary barriers must be installed on the bridge(s) and/or box culvert(s) prior to March 1 or after August 31, but in no time in between this period. Exclusionary barriers are not a guaranteed method of preventing migratory birds from nesting beneath bridges and work schedules shall take into account the possibility that barriers

will not be successful. If exclusionary barriers are to be used, these steps shall be followed:

a. The Project ecologist shall be notified by phone (404) 631-1100 of the decision to install exclusionary barriers and the date of the proposed installation prior to the installation of any exclusionary devices.

b. The structure(s) shall be checked for nests prior to the placement of exclusionary barriers. If nests are present, they shall be inspected to ensure that eggs or birds are not present. If the nests are found to be occupied, construction activities associated with the bridge shall be postponed until after August 31 when the breeding season is complete.

c. For any box culvert(s) being replaced, exclusionary barriers shall be installed on both the inlet and outlet openings. For any box culvert(s) being extended, exclusionary barriers shall be placed on the opening(s) (inlet and/or outlet) where work is taking place. For bridge(s) being removed, barriers shall be installed along the full length of the bridge(s). In all cases, barriers shall be installed prior to March 1 and left in place until August 31 or until the culvert removal, culvert extension, or bridge demolition is complete. If the exclusionary barriers fail to prevent nesting (i.e., birds are able to bypass barriers and build nests), construction activities associated with the bridge shall be postponed until after August 31.

d. During construction activities, exclusionary barriers shall be inspected daily for holes or other defects that impair its ability to exclude migratory birds from nesting beneath the bridge. Any holes or defects shall be repaired immediately.

e. Entanglement and/or entrapment of barn swallows, cliff swallows, and eastern phoebes in exclusionary netting constitutes harm to migratory birds. Any entanglement and/or entrapment of migratory birds shall be reported immediately to the Project Engineer, who in turn will notify the State Environmental Administrator, Georgia Department of Transportation, Office of Environmental Services at (404) 631-1101.

3. Migratory birds may nest in other structures or natural features that will be impacted by construction activities. If active nests containing eggs are encountered within the footprint of construction activities, the finding shall be reported immediately to the Project Engineer, who in turn shall notify the State Environmental Administrator, Georgia Department of Transportation, Office of Environmental Services at (404) 631-1101. All activity within 50 feet of active nests shall cease pending consultation by the Department with the U. S. Fish and Wildlife Service and the lead Federal Agency.

4. When working on bridges and culverts, sightings of bat species shall be reported immediately to the Project Engineer who in turn will notify the State Environmental Administrator, Georgia Department of Transportation, Office of Environmental Services at (404) 631-1101. All construction activity on the structure shall cease pending consultation by the Department with the U. S. Fish and Wildlife Service and/or

the Georgia Department of Natural Resources and/or the lead Federal Agency. The Department will inform the Contractor of any changes to the project.

5. In the event any incident occurs that causes harm or injury to migratory birds during construction activities, the incident shall be reported immediately to the Project Engineer who in turn shall notify the State Environmental Administrator, Georgia Department of Transportation, Office of Environmental Services at (404) 631-1101. All activity shall cease pending consultation by the Department with the U. S. Fish and Wildlife Service and the lead Federal Agency.

6. Within 30 days of the completion of construction and the stopping of time charges, a report shall be provided to the State Environmental Administrator, Georgia Department of Transportation, Office of Environmental Services, 600 West Peachtree Street NW, Atlanta, Georgia 30308. GDOT in turn will provide copies of the report to the U.S. Fish and Wildlife Service, the Georgia Department of Natural Resources Wildlife Resources Division, and the lead Federal Agency. The following information will be included in the report:

   a. Contractor name and address.

   b. Name and title of report preparer.

   c. GDOT Project Identification (PI) number.

   d. County(s) in which project is located.

   e. Project description.

   f. Construction start and end dates.

   g. Date GDOT was notified of intent to install barrier(s) per # 107.23G.2.a.

   h. Number and type(s) of structures on which exclusion barriers were installed.

   i. Type(s) of exclusion material used on each structure.

   j. Start and end date(s) of installation of exclusionary barrier on each structure.

   k. Start and end date(s) of removal of exclusionary barrier from each structure.

   l. Photographs of each structure before and after exclusionary barrier installation.

   m. Statement regarding whether the exclusionary barrier was effective in deterring bird use of the structure during construction.

   n. Description of any incidents causing harm or injury to migratory birds during construction. This should include incidents that were reported as required under 107.23G.5.

o. Description of any sightings of bat species when working on bridges and culverts. This should include incidents that were reported as required under 107.23G.4.

7. All costs pertaining to any requirement contained herein shall be included in the overall bid submitted unless such requirement is designated as a separate Pay Item in the Proposal.

107.24 Closing of Roadways without On-Site Detours

When existing roadways are to be closed to through traffic and on-site detours are not provided, the Contractor shall submit a written notice to the Engineer for approval 14 days prior to the closure of the existing roadways.

After receiving approval from the Engineer for the closure, the Contractor shall install signs at each closure site, in accordance with the MUTCD, to inform the traveling public of the proposed closure, including the date of closure. The sign shall be placed 5 days prior to the closure, at the direction of the Engineer.

Prior to the closure, the Area Engineer will inform local government officials and agencies, local news media, and the DOT Public Information Office of the proposed closure of the roadways.

107.25 Disruption to Residential and Commercial Property

The Contractor shall plan, coordinate, and prosecute the work such that disruption to personal property and business is held to a practical minimum.

All construction areas abutting lawns and yards of residential or commercial property shall be restored promptly. Backfilling of each drainage structure or section of curb and gutter, sidewalk, or driveway shall be accomplished as soon as adequate strength is obtained. Finishing, dressing and grassing shall be accomplished immediately thereafter as a continuous operation within each area being constructed with emphasis placed on completing each individual yard or business frontage. Care shall be taken to provide positive drainage to avoid ponding or concentration of runoff.

Handwork, including raking and smoothing, shall be required to ensure that roots, sticks, rocks, and other debris is removed in order to provide a neat and pleasing appearance. Grassing, when in season, shall immediately follow in order to establish permanent cover at the earliest date. If grassing is not in season, proper erosion control shall be installed and maintained.

The work described herein shall be in addition to that required by Subsection 104.07 “Final Cleaning Up” and Subsection 105.16 “Final Inspection and Acceptance.”

Georgia Department of Transportation

Technical Provisions

For

Design-Build Agreement

P.I. No. 0010212

Attachment 6-2

UTILITY MEMORANDUMS OF UNDERSTANDING

- **Bellsouth Telecommunications, LLC**
- **Charter Communications**
- **Crown Castle**
- **Gainesville Water Resources**
- **Jackson EMC**
- **Southern Gas Company**

Georgia DOT Project: Bridge Replacement on SR 53 Westbound @ the Chattahoochee River
GDOT P.I. 0010212

DESIGN-BUILD
MEMORANDUM OF UNDERSTANDING

between the

Georgia Department of Transportation (hereafter the DEPARTMENT)

and

Bellsouth Telecommunications, LLC d/b/a AT&T Georgia (hereafter the OWNER)

Whereas GDOT, hereafter referred to as the DEPARTMENT proposes to undertake a design-build project hereafter referred to as SR 53 Westbound @ the Chattahoochee River PROJECT to replace the bridge on SR 53 Westbound over the Chattahoochee River in Hall County, Georgia by contract through competitive bidding procedures; and,

Whereas the DEPARTMENT will accomplish the PROJECT through a Design Consultant, Design Consultant Team and/or Contractor, hereafter referred to as CONTRACTOR; and the utility owner hereafter referred to as the OWNER, and

Whereas, where OWNER has property rights ("Prior Rights") at the location of the PROJECT, OWNER will provide written evidence as to said prior rights within the area and will provide written documentation of prior rights relating to any individual crossing or Utility Facility, at the location of the PROJECT; and

Whereas, OWNER acknowledges that, generally, absent a showing of prior rights, the costs of relocation, protection, removal, or adjustment performed by OWNER shall be borne by OWNER; and

Whereas, pursuant to O.C.G.A. § 32-6-170(b), DEPARTMENT is authorized to pay or participate in the payment of the costs of relocation, protection, or adjustment of OWNER'S facilities where DEPARTMENT has made the determination that (i) such payments are in the best interest of the public and necessary in order to expedite the staging of the design-build project; and (ii) the costs of the removal, relocation, protection, or adjustment of such facilities are included as part of the Contract between the Department and the Department's roadway contractor for the design-build project; and

1. Type of Utility

OWNER has the following utility facilities which may need to be adjusted or relocated as a result of the proposed PROJECT:

Type of facility or facilities of OWNER:

_____Domestic water mains and distribution lines and associated appurtenances
_____Sanitary Sewer facilities and/or Storm Drainage System
_____Electrical Distribution (overhead and underground) wires, poles, etc.
_____Electrical Transmission (overhead and underground) wires, poles, etc.
_____Natural Gas Distribution Facilities (underground)
_____Natural Gas Transmission Facilities (underground)
_____Petroleum Pipeline (underground)
___x___Telecommunications facilities and equipment
_____Cable TV facilities
_____Street Lighting
_____Internet Data Service
_____Other Facilities (Description) _____

2. New Utility Facilities Proposed (Betterment)

OWNER desires the following to be installed as new additional facilities within the PROJECT. Insert here or attach a detailed description of proposed new additional utility installations:

___N/A_____

_____

3. Assignment of Responsibilities for Design and Construction

This MEMORANDUM OF UNDERSTANDING and the following shall serve as a *basis* for assignment of responsibilities and costs for the DEPARTMENT, CONTRACTOR and the OWNER to enter into a Standard Utility Agreement (SUA) or Contract Item Agreement (CIA), if necessary, with OWNER once the PROJECT is awarded to the CONTRACTOR. For a PROJECT implementation, GDOT will not have in its possession exact costing plans to be utilized to determine exact locations of the removal, relocation, protection, or adjustment. However, Overhead/Subsurface Utility Engineering (SUE) investigations plans exist providing the best information and signifying the layout of known existing facilities. Please use these plans for developing the final determination of services as indicated below. The CONTRACTOR developed plans will be provided to the OWNER after the design build project is awarded by GDOT which shall be used by the CONTRACTOR as the final basis for the SUA or CIA. **Betterment costs will be the OWNER'S responsibility.**

NOTE: Water and Sewer Design and Construction relocation work put in the contract will automatically be accomplished by the DEPARTMENT'S CONTRACTOR. The UTILITY OWNER will still have design approval authority. (No Pre-Approved Contractor/Consultant List required, leave page 6 blank). If you are a Water & Sewer Utility and choose to put your relocation Design and Construction in the contract, please check Design and Construction under Option 2 under 3B. Owner's electing to perform their own design, at their own cost, please select design under 3C.

OWNER hereby intends to:

3A. OWNER, at the DEPARTMENT'S cost through an Agreement, will provide the following services for the properties for which it has established prior rights (Check to signify):

Design _____
Construction _____

3B. OWNER, at the CONTRACTOR'S cost, for any removal, relocation, protection, adjustment and/or design (Regardless of Prior Rights) will allow their facilities to be placed into the DEPARTMENT'S contract for the following services pursuant to O.C.G.A. § 32-6-170(b). The CONTRACTOR will add the removal, relocation, protection, materials, adjustment and/or design cost, excluding betterment, to the overall PROJECT's cost. (Check to signify):

Option 1: OWNER wants the work to be performed by the OWNER's pre-approved Design Consultants and/or Contractors.

Design __x___
Construction __x___

Option 2: OWNER wants the DEPARTMENT'S CONTRACTOR to perform the design and/or construction. (Check to signify):

Design ____
Construction ____ **If both are checked, please leave page 6 blank.**

As per this section, all work necessary for the removal, relocation, protection, or adjustment of the described utilities in accordance with the plans when approved shall be included in the project contract and accomplished by the CONTRACTOR except as follows (Check none or list any work items to be performed by the OWNER)

None _____

Excluded Items _____
_____
_____

Comments: **While the DB Contractor will be able to perform much of the design and construction, only AT&T union personnel can pull cable/fiber, perform splicing/tie-in work, some technical design work and do pole attachments (AT&T will be responsible these cost). The DB Contractor can install any required ducts, poles and vaults/manholes/handholes, enclosures and bridge attachments and will be responsible for the cost of the design and construction (including materials). In the MOU, AT&T has selected design and construction under 3b, option 1. AT&T has also selected 3c design and construction. AT&T will be responsible for some cost as indicated above and the DB Contractor will be responsible for the remaining cost.**

3C. OWNER, at OWNER'S cost, will provide the following services (Check to signify):

Design _____
Construction _____

The following is hereby mutually agreed to and understood by both parties:

1. The identification of existing facilities including preparation of Overhead/Subsurface Utility Engineering (SUE) investigations plans will be accomplished by the DEPARTMENT prior to award of the PROJECT and thereafter supplemented by the CONTRACTOR.

2. The CONTRACTOR shall coordinate reviews of the utility relocation information and obtain acceptance from the OWNER and DEPARTMENT when required. However; the OWNER shall apply for and obtain any required permits from the DEPARTMENT and perform any final design or proprietary design needed to administer its own relocation work if the work will not be included in the contract If the preliminary plans indicate that no conflict exists, and the OWNER concurs with this information, the OWNER shall provide a letter of "no conflict" to the CONTRACTOR.

3. After award of the PROJECT, the CONTRACTOR will research any claimed compensable property interest for each OWNER claiming prior rights under section 3A and present the findings to the DEPARTMENT and OWNER for approval. The plans and estimate for the utility work shall be subject to approval of both the DEPARTMENT and the OWNER prior to construction. If the OWNER chooses to perform its own relocations and the OWNER holds no property interest as stated above; the OWNER shall confirm in writing that the OWNER will relocate its own facilities at no cost to the DEPARTMENT or the CONTRACTOR.

4. All construction engineering and contract supervision shall be the responsibility of the DEPARTMENT and the CONTRACTOR to ensure that all utility work included in the contract is accomplished in accordance with the PROJECT's plans and specifications. The CONTRACTOR will consult with the OWNER before authorizing any changes or deviations which affect the OWNER's facility.

5. For utility work included in the contract, the CONTRACTOR shall ensure that the design/construction and installation of the OWNER'S facilities is performed by a contractor/design consultant pre-approved/registered with both the DEPARTMENT and the OWNER. For any work included in the contract, excluding water and sewer, the OWNER will provide a list of pre-approved/registered contractors/design consultants on page 6 of the MOU.

6. For Utility work included in the contract, the OWNER or the OWNER's Consultant shall have the right to visit and inspect the work at any time and advise the CONTRACTOR and the DEPARTMENT'S Engineer of any observed discrepancies or potential issues. The DEPARTMENT agrees to notify the OWNER when all utility work is completed and ready for final inspection by the OWNER.

7. Upon Maintenance Acceptance or Final Acceptance of the utility work included in the contract and upon certification by the DEPARTMENT'S Engineer and the OWNER that the work has been completed in accordance with the plans and specifications, the OWNER will accept the adjusted, relocated, and additional facilities and will thereafter operate and maintain said facilities located within the PROJECT right of way subject to the DEPARTMENT'S Utility Accommodations Policy and Standards Manual (UAM), current edition" and any agreements in effect without further cost to the DEPARTMENT or it's CONTRACTOR. Final acceptance of the utility relocation work is accomplished by the execution of the Utility Facility Relocation Acceptance Form. The CONTRACTOR shall provide the OWNER with a complete set of "As-Built Plans" for review and approval reflecting the relocation work performed by the CONTRACTOR. Upon completion of the Utility Facility Relocation Acceptance Form and the exchange of the final OWNER approved "As-Built Plans", the OWNER will operate and maintain the installed facilities going forward based on the date of execution of the Utility Facility Relocation Acceptance Form by the DEPARTMENT.

8. For utility coordination, relocation and reimbursement matters, the OWNER shall cooperate with the CONTRACTOR in the same manner as if coordinating directly with the DEPARTMENT in accordance with the laws of the State of Georgia, the DEPARTMENT'S UAM and any agreements in effect between the DEPARTMENT and OWNER. The OWNER agrees to cooperate in good faith with the CONTRACTOR and to respond to all requests for information or meetings required to reach a resolution of any disputed items.

9. All Utility work included in the PROJECT's contract and Utility work completed by the OWNER that is reimbursed by the DEPARTMENT through an agreement shall be in accordance with the BUY AMERICA requirements of the Federal regulations (23 U.S.C. 313 and 23 CFR 635.410) all manufacturing processes for steel and iron products or predominantly of steel or iron furnished for permanent incorporation into the work on this project shall occur in the United States. The only exception to this requirement is the production of pig iron and the processing, pelletizing and reduction of iron ore, which may occur in another country. Other than these exceptions, all melting, rolling, extruding, machining, bending, grinding, drilling, coating, etc. must occur in the United States.

    a. Products of steel include, but are not limited to, such products as structural steel piles, reinforcing steel, structural plate, steel culverts, and guardrail steel supports for signs, signals and luminaires. Products of iron include, but are not limited to, such products as cast iron frames and grates and ductile iron pipe. Coatings include, but are not limited to, the applications of epoxy, galvanizing and paint. The coating material is not limited to this clause, only the application process.

    b. A Certificate of Compliance shall be furnished for steel and iron products as part of the backup information with the billing. The form for this certification entitled "Buy America Certificate of Compliance" is attached to this agreement as "Exhibit A." Records to be maintained by the Developer for this certification shall include a signed mill test report and a signed certification by each supplier, distributor, fabricator, and manufacturer that has handled the steel or iron product affirming that every process, including the application of a coating, performed on the steel or iron product has been carried out in the United States of America, except as allowed by this Section. The lack of these certifications will be justification for rejection of the steel and/or iron product or nonpayment of the work.

The requirements of said law and regulations do not prevent the use of miscellaneous steel or iron components, subcomponents and hardware necessary to encase, assemble and construct the above products, manufactured products that are not predominantly steel or iron or a minimal use of foreign steel and iron materials if the cost of such materials used does not exceed one-tenth of one percent (0.1%) of the total contract price or $2,500.00, whichever is greater. The Memorandum of Understanding will be incorporated into the project contract by reference or Exhibit.

APPROVED FOR THE OWNER BY:

(Signature) (Date) 4/9/18

Engineer

(Title)

APPROVED FOR THE DEPARTMENT BY:

(Signature) (Date) 5/31/18

STATE UTILITIES ADMINISTRATOR

Pre-Approved Contractor List

Company Name: Ansco & Associates
Address: 736 Park North Blvd, Suite 100, Clarkston, GA 30021
Phone: 404-508-5700
Contact Person: Walt Woody
E-Mail: walt.woody@anscollc.com

Company Name: Cable East, Inc.
Address: 1940 Statham Dr, Statham, Ga 30666
Phone: 706-255-3952
Contact Person: Robert Wall
E-Mail: robert.wall@cable-east.com

Company Name: Danella, Inc
Address: 142 Old Airport Rd, Lagrange, GA 30240
Phone: 706-325-7233
Contact Person: Jack Martinec
E-Mail: jmartinec@danella.com

Please provide a minimum of three.

Pre-Approved Design Consultant List

Company Name: SourceOne Corp.
Address: 1012 Coggins Pl, Marietta, GA 30060
Phone: 678-594-5100
Contact Person: Ben Blanton
E-Mail: bblanton@sourceonecorp.com

Company Name: RTS Associates
Address: 188 Hurricane Shoals Rd NE #1000, Lawrenceville, GA 30046
Phone: 678-442-1515
Contact Person: Sheree Woodham
E-Mail: sheree.woodham@rtsassociates.net

Company Name: Ansco & Associates
Address: 736 Park North Blvd, Suite 100, Clarkston, GA 30021
Phone: 404-508-5700
Contact Person: Walt Woody
E-Mail: walt.woody@anscollc.com

Georgia DOT Project: Bridge Replacement on SR 53 Westbound @ the Chattahoochee River
GDOT P.I. 0010212

DESIGN-BUILD
MEMORANDUM OF UNDERSTANDING
between the
Georgia Department of Transportation (hereafter the DEPARTMENT)
and
Charter Communications (hereafter the OWNER)

Whereas GDOT, hereafter referred to as the DEPARTMENT proposes to undertake a design-build project hereafter referred to as SR 53 Westbound @ the Chattahoochee River PROJECT to replace the bridge on SR 53 Westbound over the Chattahoochee River in Hall County, Georgia by contract through competitive bidding procedures; and,

Whereas the DEPARTMENT will accomplish the PROJECT through a Design Consultant, Design Consultant Team and/or Contractor, hereafter referred to as CONTRACTOR; and the utility owner hereafter referred to as the OWNER, and

Whereas, where OWNER has property rights ("Prior Rights") at the location of the PROJECT, OWNER will provide written evidence as to said prior rights within the area and will provide written documentation of prior rights relating to any individual crossing or Utility Facility, at the location of the PROJECT; and

Whereas, OWNER acknowledges that, generally, absent a showing of prior rights, the costs of relocation, protection, removal, or adjustment performed by OWNER shall be borne by OWNER; and

Whereas, pursuant to O.C.G.A. § 32-6-170(b), DEPARTMENT is authorized to pay or participate in the payment of the costs of relocation, protection, or adjustment of OWNER'S facilities where DEPARTMENT has made the determination that (i) such payments are in the best interest of the public and necessary in order to expedite the staging of the design-build project; and (ii) the costs of the removal, relocation, protection, or adjustment of such facilities are included as part of the Contract between the Department and the Department's roadway contractor for the design-build project; and

1. Type of Utility
OWNER has the following utility facilities which may need to be adjusted or relocated as a result of the proposed PROJECT:

Type of facility or facilities of OWNER:
_____Domestic water mains and distribution lines and associated appurtenances
_____Sanitary Sewer facilities and/or Storm Drainage System
_____Electrical Distribution (overhead and underground) wires, poles, etc.
_____Electrical Transmission (overhead and underground) wires, poles, etc.
_____Natural Gas Distribution Facilities (underground)
_____Natural Gas Transmission Facilities (underground)
_____Petroleum Pipeline (underground)
_____Telecommunications facilities and equipment
___X__Cable TV facilities
_____Street Lighting
_____Internet Data Service
_____Other Facilities (Description) _____

2. New Utility Facilities Proposed (Betterment)

OWNER desires the following to be installed as new additional facilities within the PROJECT. Insert here or attach a detailed description of proposed new additional utility installations:

_____

_____

3. Assignment of Responsibilities for Design and Construction

This MEMORANDUM OF UNDERSTANDING and the following shall serve as a *basis* for assignment of responsibilities and costs for the DEPARTMENT, CONTRACTOR and the OWNER to enter into a Standard Utility Agreement (SUA) or Contract Item Agreement (CIA), if necessary, with OWNER once the PROJECT is awarded to the CONTRACTOR. For a PROJECT implementation, GDOT will not have in its possession exact costing plans to be utilized to determine exact locations of the removal, relocation, protection, or adjustment. However, Overhead/Subsurface Utility Engineering (SUE) investigations plans exist providing the best information and signifying the layout of known existing facilities. Please use these plans for developing the final determination of services as indicated below. The CONTRACTOR developed plans will be provided to the OWNER after the design build project is awarded by GDOT which shall be used by the CONTRACTOR as the final basis for the SUA or CIA. **Betterment costs will be the OWNER'S responsibility.**

NOTE: Water and Sewer Design and Construction relocation work put in the contract will automatically be accomplished by the DEPARTMENT'S CONTRACTOR. The UTILITY OWNER will still have design approval authority. (No Pre-Approved Contractor/Consultant List required, leave page 6 blank). If you are a Water & Sewer Utility and choose to put your relocation Design and Construction in the contract, please check Design and Construction under Option 2 under 3B. Owner's electing to perform their own design, at their own cost, please select design under 3C.

OWNER hereby intends to:

3A. OWNER, at the DEPARTMENT'S cost through an Agreement, will provide the following services for the properties for which it has established prior rights (Check to signify):

Design _____
Construction _____

3B. OWNER, at the CONTRACTOR'S cost, for any removal, relocation, protection, adjustment and/or design (Regardless of Prior Rights) will allow their facilities to be placed into the DEPARTMENT'S contract for the following services pursuant to O.C.G.A. § 32-6-170(b). The CONTRACTOR will add the removal, relocation, protection, materials, adjustment and/or design cost, excluding betterment, to the overall PROJECT's cost. (Check to signify):

Option 1: OWNER wants the work to be performed by the OWNER's pre-approved Design Consultants and/or Contractors.

Design _____
Construction __X__

Option 2: OWNER wants the DEPARTMENT'S CONTRACTOR to perform the design and/or construction. (Check to signify):

Design ____
Construction ____ **If both are checked, please leave page 6 blank.**

As per this section, all work necessary for the removal, relocation, protection, or adjustment of the described utilities in accordance with the plans when approved shall be included in the project contract and accomplished by the CONTRACTOR except as follows (Check none or list any work items to be performed by the OWNER)

None _____

Excluded Items _____

Comments: _____

3C. OWNER, at OWNER'S cost, will provide the following services (Check to signify):

Design __X__
Construction _____

The following is hereby mutually agreed to and understood by both parties:

1. The identification of existing facilities including preparation of Overhead/Subsurface Utility Engineering (SUE) investigations plans will be accomplished by the DEPARTMENT prior to award of the PROJECT and thereafter supplemented by the CONTRACTOR.

2. The CONTRACTOR shall coordinate reviews of the utility relocation information and obtain acceptance from the OWNER and DEPARTMENT when required. However; the OWNER shall apply for and obtain any required permits from the DEPARTMENT and perform any final design or proprietary design needed to administer its own relocation work if the work will not be included in the contract If the preliminary plans indicate that no conflict exists, and the OWNER concurs with this information, the OWNER shall provide a letter of "no conflict" to the CONTRACTOR.

3. After award of the PROJECT, the CONTRACTOR will research any claimed compensable property interest for each OWNER claiming prior rights under section 3A and present the findings to the DEPARTMENT and OWNER for approval. The plans and estimate for the utility work shall be subject to approval of both the DEPARTMENT and the OWNER prior to construction. If the OWNER chooses to perform its own relocations and the OWNER holds no property interest as stated above; the OWNER shall confirm in writing that the OWNER will relocate its own facilities at no cost to the DEPARTMENT or the CONTRACTOR.

4. All construction engineering and contract supervision shall be the responsibility of the DEPARTMENT and the CONTRACTOR to ensure that all utility work included in the contract is accomplished in accordance with the PROJECT's plans and specifications. The CONTRACTOR will consult with the OWNER before authorizing any changes or deviations which affect the OWNER's facility.

5. For utility work included in the contract, the CONTRACTOR shall ensure that the design/construction and installation of the OWNER'S facilities is performed by a contractor/design consultant pre-approved/registered with both the DEPARTMENT and the OWNER. For any work included in the contract, excluding water and sewer, the OWNER will provide a list of pre-approved/registered contractors/design consultants on page 6 of the MOU.

6. For Utility work included in the contract, the OWNER or the OWNER's Consultant shall have the right to visit and inspect the work at any time and advise the CONTRACTOR and the DEPARTMENT'S Engineer of any observed discrepancies or potential issues. The DEPARTMENT agrees to notify the OWNER when all utility work is completed and ready for final inspection by the OWNER.

7. Upon Maintenance Acceptance or Final Acceptance of the utility work included in the contract and upon certification by the DEPARTMENT'S Engineer and the OWNER that the work has been completed in accordance with the plans and specifications, the OWNER will accept the adjusted, relocated, and additional facilities and will thereafter operate and maintain said facilities located within the PROJECT right of way subject to the DEPARTMENT'S Utility Accommodations Policy and Standards Manual (UAM), current edition" and any agreements in effect without further cost to the DEPARTMENT or it's CONTRACTOR. Final acceptance of the utility relocation work is accomplished by the execution of the Utility Facility Relocation Acceptance Form. The CONTRACTOR shall provide the OWNER with a complete set of "As-Built Plans" for review and approval reflecting the relocation work performed by the CONTRACTOR. Upon completion of the Utility Facility Relocation Acceptance Form and the exchange of the final OWNER approved "As-Built Plans", the OWNER will operate and maintain the installed facilities going forward based on the date of execution of the Utility Facility Relocation Acceptance Form by the DEPARTMENT.

8. For utility coordination, relocation and reimbursement matters, the OWNER shall cooperate with the CONTRACTOR in the same manner as if coordinating directly with the DEPARTMENT in accordance with the laws of the State of Georgia, the DEPARTMENT'S UAM and any agreements in effect between the DEPARTMENT and OWNER. The OWNER agrees to cooperate in good faith with the

CONTRACTOR and to respond to all requests for information or meetings required to reach a resolution of any disputed items.

9. All Utility work included in the PROJECT's contract and Utility work completed by the OWNER that is reimbursed by the DEPARTMENT through an agreement shall be in accordance with the BUY AMERICA requirements of the Federal regulations (23 U.S.C. 313 and 23 CFR 635.410) all manufacturing processes for steel and iron products or predominantly of steel or iron furnished for permanent incorporation into the work on this project shall occur in the United States. The only exception to this requirement is the production of pig iron and the processing, pelletizing and reduction of iron ore, which may occur in another country. Other than these exceptions, all melting, rolling, extruding, machining, bending, grinding, drilling, coating, etc. must occur in the United States.

    a. Products of steel include, but are not limited to, such products as structural steel piles, reinforcing steel, structural plate, steel culverts, and guardrail steel supports for signs, signals and luminaires. Products of iron include, but are not limited to, such products as cast iron frames and grates and ductile iron pipe. Coatings include, but are not limited to, the applications of epoxy, galvanizing and paint. The coating material is not limited to this clause, only the application process.

    b. A Certificate of Compliance shall be furnished for steel and iron products as part of the backup information with the billing. The form for this certification entitled "Buy America Certificate of Compliance" is attached to this agreement as "Exhibit A." Records to be maintained by the Developer for this certification shall include a signed mill test report and a signed certification by each supplier, distributor, fabricator, and manufacturer that has handled the steel or iron product affirming that every process, including the application of a coating, performed on the steel or iron product has been carried out in the United States of America, except as allowed by this Section. The lack of these certifications will be justification for rejection of the steel and/or iron product or nonpayment of the work.

The requirements of said law and regulations do not prevent the use of miscellaneous steel or iron components, subcomponents and hardware necessary to encase, assemble and construct the above products, manufactured products that are not predominantly steel or iron or a minimal use of foreign steel and iron materials if the cost of such materials used does not exceed one-tenth of one percent (0.1%) of the total contract price or $2,500.00, whichever is greater. The Memorandum of Understanding will be incorporated into the project contract by reference or Exhibit.

APPROVED FOR THE OWNER BY:

Andy White — 03/22/18

(Signature) (Date)

Construction Coordinator II

(Title)

APPROVED FOR THE DEPARTMENT BY:

5/31/18

(Signature) (Date)

STATE UTILITIES ADMINISTRATOR

Pre-Approved Contractor List

Company Name: Ficoa Communications
Address: 5135 Carson Ct, Buford GA 30518
Phone: 678-541-5287
Contact Person: Frank Cauley
E-Mail: Frank.cauley@bellsouth.net

Company Name:
Address:
Phone:
Contact Person:
E-Mail:

Company Name:
Address:
Phone:
Contact Person:
E-Mail:

Please provide a minimum of three.

Pre-Approved Design Consultant List

Company Name:
Address:
Phone:
Contact Person:
E-Mail:

Company Name:
Address:
Phone:
Contact Person:
E-Mail:

Company Name:
Address:
Phone:
Contact Person:
E-Mail:

Georgia DOT Project: Bridge Replacement on SR 53 Westbound @ the Chattahoochee River
GDOT P.I. 0010212

DESIGN-BUILD
MEMORANDUM OF UNDERSTANDING
between the
Georgia Department of Transportation (hereafter the DEPARTMENT)
and
Crown Castle (hereafter the OWNER)

Whereas GDOT, hereafter referred to as the DEPARTMENT proposes to undertake a design-build project hereafter referred to as SR 53 Westbound @ the Chattahoochee River PROJECT to replace the bridge on SR 53 Westbound over the Chattahoochee River in Hall County, Georgia by contract through competitive bidding procedures; and,

Whereas the DEPARTMENT will accomplish the PROJECT through a Design Consultant, Design Consultant Team and/or Contractor, hereafter referred to as CONTRACTOR; and the utility owner hereafter referred to as the OWNER, and

Whereas, where OWNER has property rights ("Prior Rights") at the location of the PROJECT, OWNER will provide written evidence as to said prior rights within the area and will provide written documentation of prior rights relating to any individual crossing or Utility Facility, at the location of the PROJECT; and

Whereas, OWNER acknowledges that, generally, absent a showing of prior rights, the costs of relocation, protection, removal, or adjustment performed by OWNER shall be borne by OWNER; and

Whereas, pursuant to O.C.G.A. § 32-6-170(b), DEPARTMENT is authorized to pay or participate in the payment of the costs of relocation, protection, or adjustment of OWNER'S facilities where DEPARTMENT has made the determination that (i) such payments are in the best interest of the public and necessary in order to expedite the staging of the design-build project; and (ii) the costs of the removal, relocation, protection, or adjustment of such facilities are included as part of the Contract between the Department and the Department's roadway contractor for the design-build project; and

1. Type of Utility
OWNER has the following utility facilities which may need to be adjusted or relocated as a result of the proposed PROJECT:

Type of facility or facilities of OWNER:
_____Domestic water mains and distribution lines and associated appurtenances
_____Sanitary Sewer facilities and/or Storm Drainage System
_____Electrical Distribution (overhead and underground) wires, poles, etc.
_____Electrical Transmission (overhead and underground) wires, poles, etc.
_____Natural Gas Distribution Facilities (underground)
_____Natural Gas Transmission Facilities (underground)
_____Petroleum Pipeline (underground)
__X__Telecommunications facilities and equipment
_____Cable TV facilities
_____Street Lighting
_____Internet Data Service
_____Other Facilities (Description) _____

2. New Utility Facilities Proposed (Betterment)

OWNER desires the following to be installed as new additional facilities within the PROJECT. Insert here or attach a detailed description of proposed new additional utility installations:

_____

_____

3. Assignment of Responsibilities for Design and Construction

This MEMORANDUM OF UNDERSTANDING and the following shall serve as a *basis* for assignment of responsibilities and costs for the DEPARTMENT, CONTRACTOR and the OWNER to enter into a Standard Utility Agreement (SUA) or Contract Item Agreement (CIA), if necessary, with OWNER once the PROJECT is awarded to the CONTRACTOR. For a PROJECT implementation, GDOT will not have in its possession exact costing plans to be utilized to determine exact locations of the removal, relocation, protection, or adjustment. However, Overhead/Subsurface Utility Engineering (SUE) investigations plans exist providing the best information and signifying the layout of known existing facilities. Please use these plans for developing the final determination of services as indicated below. The CONTRACTOR developed plans will be provided to the OWNER after the design build project is awarded by GDOT which shall be used by the CONTRACTOR as the final basis for the SUA or CIA. **Betterment costs will be the OWNER'S responsibility.**

NOTE: Water and Sewer Design and Construction relocation work put in the contract will automatically be accomplished by the DEPARTMENT'S CONTRACTOR. The UTILITY OWNER will still have design approval authority. (No Pre-Approved Contractor/Consultant List required, leave page 6 blank). If you are a Water & Sewer Utility and choose to put your relocation Design and Construction in the contract, please check Design and Construction under Option 2 under 3B. Owner's electing to perform their own design, at their own cost, please select design under 3C.

OWNER hereby intends to:

3A. OWNER, at the DEPARTMENT'S cost through an Agreement, will provide the following services for the properties for which it has established prior rights (Check to signify):

Design _____
Construction _____

3B. OWNER, at the CONTRACTOR'S cost, for any removal, relocation, protection, adjustment and/or design (Regardless of Prior Rights) will allow their facilities to be placed into the DEPARTMENT'S contract for the following services pursuant to O.C.G.A. § 32-6-170(b). The CONTRACTOR will add the removal, relocation, protection, materials, adjustment and/or design cost, excluding betterment, to the overall PROJECT's cost. (Check to signify):

Option 1: OWNER wants the work to be performed by the OWNER's pre-approved Design Consultants and/or Contractors.

Design __x___
Construction _x____

Option 2: OWNER wants the DEPARTMENT'S CONTRACTOR to perform the design and/or construction. (Check to signify):

Design ____
Construction ____ **If both are checked, please leave page 6 blank.**

As per this section, all work necessary for the removal, relocation, protection, or adjustment of the described utilities in accordance with the plans when approved shall be included in the project contract and accomplished by the CONTRACTOR except as follows (Check none or list any work items to be performed by the OWNER)

None _____

Excluded Items _____

Comments: _____

3C. OWNER, at OWNER'S cost, will provide the following services (Check to signify):

Design _____
Construction _____

The following is hereby mutually agreed to and understood by both parties:

1. The identification of existing facilities including preparation of Overhead/Subsurface Utility Engineering (SUE) investigations plans will be accomplished by the DEPARTMENT prior to award of the PROJECT and thereafter supplemented by the CONTRACTOR.

2. The CONTRACTOR shall coordinate reviews of the utility relocation information and obtain acceptance from the OWNER and DEPARTMENT when required. However; the OWNER shall apply for and obtain any required permits from the DEPARTMENT and perform any final design or proprietary design needed to administer its own relocation work if the work will not be included in the contract If the preliminary plans indicate that no conflict exists, and the OWNER concurs with this information, the OWNER shall provide a letter of "no conflict" to the CONTRACTOR.

3. After award of the PROJECT, the CONTRACTOR will research any claimed compensable property interest for each OWNER claiming prior rights under section 3A and present the findings to the DEPARTMENT and OWNER for approval. The plans and estimate for the utility work shall be subject to approval of both the DEPARTMENT and the OWNER prior to construction. If the OWNER chooses to perform its own relocations and the OWNER holds no property interest as stated above; the OWNER shall confirm in writing that the OWNER will relocate its own facilities at no cost to the DEPARTMENT or the CONTRACTOR.

4. All construction engineering and contract supervision shall be the responsibility of the DEPARTMENT and the CONTRACTOR to ensure that all utility work included in the contract is accomplished in accordance with the PROJECT's plans and specifications. The CONTRACTOR will consult with the OWNER before authorizing any changes or deviations which affect the OWNER's facility.

5. For utility work included in the contract, the CONTRACTOR shall ensure that the design/construction and installation of the OWNER'S facilities is performed by a contractor/design consultant pre-approved/registered with both the DEPARTMENT and the OWNER. For any work included in the contract, excluding water and sewer, the OWNER will provide a list of pre-approved/registered contractors/design consultants on page 6 of the MOU.

6. For Utility work included in the contract, the OWNER or the OWNER's Consultant shall have the right to visit and inspect the work at any time and advise the CONTRACTOR and the DEPARTMENT'S Engineer of any observed discrepancies or potential issues. The DEPARTMENT agrees to notify the OWNER when all utility work is completed and ready for final inspection by the OWNER.

7. Upon Maintenance Acceptance or Final Acceptance of the utility work included in the contract and upon certification by the DEPARTMENT'S Engineer and the OWNER that the work has been completed in accordance with the plans and specifications, the OWNER will accept the adjusted, relocated, and additional facilities and will thereafter operate and maintain said facilities located within the PROJECT right of way subject to the DEPARTMENT'S Utility Accommodations Policy and Standards Manual (UAM), current edition" and any agreements in effect without further cost to the DEPARTMENT or it's CONTRACTOR. Final acceptance of the utility relocation work is accomplished by the execution of the Utility Facility Relocation Acceptance Form. The CONTRACTOR shall provide the OWNER with a complete set of "As-Built Plans" for review and approval reflecting the relocation work performed by the CONTRACTOR. Upon completion of the Utility Facility Relocation Acceptance Form and the exchange of the final OWNER approved "As-Built Plans", the OWNER will operate and maintain the installed facilities going forward based on the date of execution of the Utility Facility Relocation Acceptance Form by the DEPARTMENT.

8. For utility coordination, relocation and reimbursement matters, the OWNER shall cooperate with the CONTRACTOR in the same manner as if coordinating directly with the DEPARTMENT in accordance with the laws of the State of Georgia, the DEPARTMENT'S UAM and any agreements in effect between the DEPARTMENT and OWNER. The OWNER agrees to cooperate in good faith with the CONTRACTOR and to respond to all requests for information or meetings required to reach a resolution of any disputed items.

9. All Utility work included in the PROJECT's contract and Utility work completed by the OWNER that is reimbursed by the DEPARTMENT through an agreement shall be in accordance with the BUY AMERICA requirements of the Federal regulations (23 U.S.C. 313 and 23 CFR 635.410) all manufacturing processes for steel and iron products or predominantly of steel or iron furnished for permanent incorporation into the work on this project shall occur in the United States. The only exception to this requirement is the production of pig iron and the processing, pelletizing and reduction of iron ore, which may occur in another country. Other than these exceptions, all melting, rolling, extruding, machining, bending, grinding, drilling, coating, etc. must occur in the United States.

    a. Products of steel include, but are not limited to, such products as structural steel piles, reinforcing steel, structural plate, steel culverts, and guardrail steel supports for signs, signals and luminaires. Products of iron include, but are not limited to, such products as cast iron frames and grates and ductile iron pipe. Coatings include, but are not limited to, the applications of epoxy, galvanizing and paint. The coating material is not limited to this clause, only the application process.

    b. A Certificate of Compliance shall be furnished for steel and iron products as part of the backup information with the billing. The form for this certification entitled "Buy America Certificate of Compliance" is attached to this agreement as "Exhibit A." Records to be maintained by the Developer for this certification shall include a signed mill test report and a signed certification by each supplier, distributor, fabricator, and manufacturer that has handled the steel or iron product affirming that every process, including the application of a coating, performed on the steel or iron product has been carried out in the United States of America, except as allowed by this Section. The lack of these certifications will be justification for rejection of the steel and/or iron product or nonpayment of the work.

The requirements of said law and regulations do not prevent the use of miscellaneous steel or iron components, subcomponents and hardware necessary to encase, assemble and construct the above products, manufactured products that are not predominantly steel or iron or a minimal use of foreign steel and iron materials if the cost of such materials used does not exceed one-tenth of one percent (0.1%) of the total contract price or $2,500.00, whichever is greater. The Memorandum of Understanding will be incorporated into the project contract by reference or Exhibit.

APPROVED FOR THE OWNER BY:

(Signature) 3-19-2018 (Date)

Project Manager

(Title)

APPROVED FOR THE DEPARTMENT BY:

(Signature) 5/31/18 (Date)

STATE UTILITIES ADMINISTRATOR

Pre-Approved Contractor List

Pre-Approved Construction Contractor				
Company Name	Address	Phone	Contact Person	E-Mail
Cable east	1940 Statham Dr Statham Ga 30666	678-753-1410	Adam Rickabaugh	adam.rickabaugh@cable-east.com
neXtier	111 Holt Industrial Cir, Acworth, GA 30101	678-761-7761	Austin Lark	al@nextieris.com
Quicksite (NODE)	1625 Candler Road Gainesville, GA 30507	678-450-0722	Justin Sullens	jsullens@qwiksiteinc.com

Pre-Approved Design Consultant				
Company Name	Address	Phone	Contact Person	E-Mail
Source One (Node)	3950 Cobb Pkwy NW, Acworth, GA 30101	678-594-5100	Jimmy Payton	jpayton@sourceonecorp.com
neXtier (fiber)	111 Holt Industrial Cir, Acworth, GA 30101	678-761-7761	Austin Lark	al@nextieris.com
Byers (fiber)				

Georgia DOT Project: Bridge Replacement on SR 53 Westbound @ the Chattahoochee River
GDOT P.I. 0010212

DESIGN-BUILD
MEMORANDUM OF UNDERSTANDING
between the
Georgia Department of Transportation (hereafter the DEPARTMENT)
and
Gainesville Water Resources (hereafter the OWNER)

Whereas GDOT, hereafter referred to as the DEPARTMENT proposes to undertake a design-build project hereafter referred to as SR 53 Westbound @ the Chattahoochee River PROJECT to replace the bridge on SR 53 Westbound over the Chattahoochee River in Hall County, Georgia by contract through competitive bidding procedures; and,

Whereas the DEPARTMENT will accomplish the PROJECT through a Design Consultant, Design Consultant Team and/or Contractor, hereafter referred to as CONTRACTOR; and the utility owner hereafter referred to as the OWNER, and

Whereas, where OWNER has property rights ("Prior Rights") at the location of the PROJECT, OWNER will provide written evidence as to said prior rights within the area and will provide written documentation of prior rights relating to any individual crossing or Utility Facility, at the location of the PROJECT; and

Whereas, OWNER acknowledges that, generally, absent a showing of prior rights, the costs of relocation, protection, removal, or adjustment performed by OWNER shall be borne by OWNER; and

Whereas, pursuant to O.C.G.A. § 32-6-170(b), DEPARTMENT is authorized to pay or participate in the payment of the costs of relocation, protection, or adjustment of OWNER'S facilities where DEPARTMENT has made the determination that (i) such payments are in the best interest of the public and necessary in order to expedite the staging of the design-build project; and (ii) the costs of the removal, relocation, protection, or adjustment of such facilities are included as part of the Contract between the Department and the Department's roadway contractor for the design-build project; and

1. Type of Utility

OWNER has the following utility facilities which may need to be adjusted or relocated as a result of the proposed PROJECT:

Type of facility or facilities of OWNER:

- ✓ Domestic water mains and distribution lines and associated appurtenances
- ✓ Sanitary Sewer facilities and/or Storm Drainage System
- ____ Electrical Distribution (overhead and underground) wires, poles, etc.
- ____ Electrical Transmission (overhead and underground) wires, poles, etc.
- ____ Natural Gas Distribution Facilities (underground)
- ____ Natural Gas Transmission Facilities (underground)
- ____ Petroleum Pipeline (underground)
- ____ Telecommunications facilities and equipment
- ____ Cable TV facilities
- ____ Street Lighting
- ____ Internet Data Service
- ____ Other Facilities (Description) _____

2. New Utility Facilities Proposed (Betterment)

OWNER desires the following to be installed as new additional facilities within the PROJECT. Insert here or attach a detailed description of proposed new additional utility installations:

N/A

3. Assignment of Responsibilities for Design and Construction

This MEMORANDUM OF UNDERSTANDING and the following shall serve as a *basis* for assignment of responsibilities and costs for the DEPARTMENT, CONTRACTOR and the OWNER to enter into a Standard Utility Agreement (SUA) or Contract Item Agreement (CIA), if necessary, with OWNER once the PROJECT is awarded to the CONTRACTOR. For a PROJECT implementation, GDOT will not have in its possession exact costing plans to be utilized to determine exact locations of the removal, relocation, protection, or adjustment. However, Overhead/Subsurface Utility Engineering (SUE) investigations plans exist providing the best information and signifying the layout of known existing facilities. Please use these plans for developing the final determination of services as indicated below. The CONTRACTOR developed plans will be provided to the OWNER after the design build project is awarded by GDOT which shall be used by the CONTRACTOR as the final basis for the SUA or CIA. **Betterment costs will be the OWNER'S responsibility.**

NOTE: Water and Sewer Design and Construction relocation work put in the contract will automatically be accomplished by the DEPARTMENT'S CONTRACTOR. The UTILITY OWNER will still have design approval authority. (No Pre-Approved Contractor/Consultant List required, leave page 6 blank). If you are a Water & Sewer Utility and choose to put your relocation Design and Construction in the contract, please check Design and Construction under Option 2 under 3B. Owner's electing to perform their own design, at their own cost, please select design under 3C.

OWNER hereby intends to:

3A. OWNER, at the DEPARTMENT'S cost through an Agreement, will provide the following services for the properties for which it has established prior rights (Check to signify):

Design _____
Construction _____

3B. OWNER, at the CONTRACTOR'S cost, for any removal, relocation, protection, adjustment and/or design (Regardless of Prior Rights) will allow their facilities to be placed into the DEPARTMENT'S contract for the following services pursuant to O.C.G.A. § 32-6-170(b). The CONTRACTOR will add the removal, relocation, protection, materials, adjustment and/or design cost, excluding betterment, to the overall PROJECT's cost. (Check to signify):

Option 1: OWNER wants the work to be performed by the OWNER's pre-approved Design Consultants and/or Contractors.

Design _____
Construction _____

Option 2: OWNER wants the DEPARTMENT'S CONTRACTOR to perform the design and/or construction. (Check to signify):

Design ____
Construction ____ **If both are checked, please leave page 6 blank.**

As per this section, all work necessary for the removal, relocation, protection, or adjustment of the described utilities in accordance with the plans when approved shall be included in the project contract and accomplished by the CONTRACTOR except as follows (Check none or list any work items to be performed by the OWNER)

None _____

Excluded Items _____

Comments: _____

3C. OWNER, at OWNER'S cost, will provide the following services (Check to signify):

Design ✓
Construction ✓

The following is hereby mutually agreed to and understood by both parties:

1. The identification of existing facilities including preparation of Overhead/Subsurface Utility Engineering (SUE) investigations plans will be accomplished by the DEPARTMENT prior to award of the PROJECT and thereafter supplemented by the CONTRACTOR.

2. The CONTRACTOR shall coordinate reviews of the utility relocation information and obtain acceptance from the OWNER and DEPARTMENT when required. However; the OWNER shall apply for and obtain any required permits from the DEPARTMENT and perform any final design or proprietary design needed to administer its own relocation work if the work will not be included in the contract If the preliminary plans indicate that no conflict exists, and the OWNER concurs with this information, the OWNER shall provide a letter of "no conflict" to the CONTRACTOR.

3. After award of the PROJECT, the CONTRACTOR will research any claimed compensable property interest for each OWNER claiming prior rights under section 3A and present the findings to the DEPARTMENT and OWNER for approval. The plans and estimate for the utility work shall be subject to approval of both the DEPARTMENT and the OWNER prior to construction. If the OWNER chooses to perform its own relocations and the OWNER holds no property interest as stated above; the OWNER shall confirm in writing that the OWNER will relocate its own facilities at no cost to the DEPARTMENT or the CONTRACTOR.

4. All construction engineering and contract supervision shall be the responsibility of the DEPARTMENT and the CONTRACTOR to ensure that all utility work included in the contract is accomplished in accordance with the PROJECT's plans and specifications. The CONTRACTOR will consult with the OWNER before authorizing any changes or deviations which affect the OWNER's facility.

5. For utility work included in the contract, the CONTRACTOR shall ensure that the design/construction and installation of the OWNER'S facilities is performed by a contractor/design consultant pre-approved/registered with both the DEPARTMENT and the OWNER. For any work included in the contract, excluding water and sewer, the OWNER will provide a list of pre-approved/registered contractors/design consultants on page 6 of the MOU.

6. For Utility work included in the contract, the OWNER or the OWNER's Consultant shall have the right to visit and inspect the work at any time and advise the CONTRACTOR and the DEPARTMENT'S Engineer of any observed discrepancies or potential issues. The DEPARTMENT agrees to notify the OWNER when all utility work is completed and ready for final inspection by the OWNER.

7. Upon Maintenance Acceptance or Final Acceptance of the utility work included in the contract and upon certification by the DEPARTMENT'S Engineer and the OWNER that the work has been completed in accordance with the plans and specifications, the OWNER will accept the adjusted, relocated, and additional facilities and will thereafter operate and maintain said facilities located within the PROJECT right of way subject to the DEPARTMENT'S Utility Accommodations Policy and Standards Manual (UAM), current edition" and any agreements in effect without further cost to the DEPARTMENT or it's CONTRACTOR. Final acceptance of the utility relocation work is accomplished by the execution of the Utility Facility Relocation Acceptance Form. The CONTRACTOR shall provide the OWNER with a complete set of "As-Built Plans" for review and approval reflecting the relocation work performed by the CONTRACTOR. Upon completion of the Utility Facility Relocation Acceptance Form and the exchange of the final OWNER approved "As-Built Plans", the OWNER will operate and maintain the installed facilities going forward based on the date of execution of the Utility Facility Relocation Acceptance Form by the DEPARTMENT.

8. For utility coordination, relocation and reimbursement matters, the OWNER shall cooperate with the CONTRACTOR in the same manner as if coordinating directly with the DEPARTMENT in accordance with the laws of the State of Georgia, the DEPARTMENT'S UAM and any agreements in effect between the DEPARTMENT and OWNER. The OWNER agrees to cooperate in good faith with the CONTRACTOR and to respond to all requests for information or meetings required to reach a resolution of any disputed items.

9. All Utility work included in the PROJECT's contract and Utility work completed by the OWNER that is reimbursed by the DEPARTMENT through an agreement shall be in accordance with the BUY AMERICA requirements of the Federal regulations (23 U.S.C. 313 and 23 CFR 635.410) all manufacturing processes for steel and iron products or predominantly of steel or iron furnished for permanent incorporation into the work on this project shall occur in the United States. The only exception to this requirement is the production of pig iron and the processing, pelletizing and reduction of iron ore, which may occur in another country. Other than these exceptions, all melting, rolling, extruding, machining, bending, grinding, drilling, coating, etc. must occur in the United States.

    a. Products of steel include, but are not limited to, such products as structural steel piles, reinforcing steel, structural plate, steel culverts, and guardrail steel supports for signs, signals and luminaires. Products of iron include, but are not limited to, such products as cast iron frames and grates and ductile iron pipe. Coatings include, but are not limited to, the applications of epoxy, galvanizing and paint. The coating material is not limited to this clause, only the application process.

    b. A Certificate of Compliance shall be furnished for steel and iron products as part of the backup information with the billing. The form for this certification entitled "Buy America Certificate of Compliance" is attached to this agreement as "Exhibit A." Records to be maintained by the Developer for this certification shall include a signed mill test report and a signed certification by each supplier, distributor, fabricator, and manufacturer that has handled the steel or iron product affirming that every process, including the application of a coating, performed on the steel or iron product has been carried out in the United States of America, except as allowed by this Section. The lack of these certifications will be justification for rejection of the steel and/or iron product or nonpayment of the work.

The requirements of said law and regulations do not prevent the use of miscellaneous steel or iron components, subcomponents and hardware necessary to encase, assemble and construct the above products, manufactured products that are not predominantly steel or iron or a minimal use of foreign steel and iron materials if the cost of such materials used does not exceed one-tenth of one percent (0.1%) of the total contract price or $2,500.00, whichever is greater. The Memorandum of Understanding will be incorporated into the project contract by reference or Exhibit.

APPROVED AS TO FORM

_____
Abbott S. Hayes, Jr.
Hulsey, Oliver & Mahar, LLP
City Attorney

CITY OF GAINESVILLE

By: _____
Bryan Lackey
City Manager

Attest: _____
Denise O. Jordan, City Clerk

CITY SEAL

CITY OF GAINESVILLE GEORGIA CHARTERED 1821

Patrick Allen

(Signature)

10.12.18

(Date)

STATE UTILITIES ADMINISTRATOR

Pre-Approved Contractor List

Company Name:
Address:
Phone:
Contact Person:
E-Mail:

Company Name:
Address:
Phone:
Contact Person:
E-Mail:

N/A

Company Name:
Address:
Phone:
Contact Person:
E-Mail:

Please provide a minimum of three.

Pre-Approved Design Consultant List

Company Name:
Address:
Phone:
Contact Person:
E-Mail:

Company Name:
Address:
Phone:
Contact Person:
E-Mail:

N/A

Company Name:
Address:
Phone:
Contact Person:
E-Mail:

Georgia DOT Project: Bridge Replacement on SR 53 Westbound @ the Chattahoochee River
GDOT P.I. 0010212

DESIGN-BUILD
MEMORANDUM OF UNDERSTANDING

between the
Georgia Department of Transportation (hereafter the DEPARTMENT)
and
Jackson EMC (hereafter the OWNER)

Whereas GDOT, hereafter referred to as the DEPARTMENT proposes to undertake a design-build project hereafter referred to as SR 53 Westbound @ the Chattahoochee River PROJECT to replace the bridge on SR 53 Westbound over the Chattahoochee River in Hall County, Georgia by contract through competitive bidding procedures; and,

Whereas the DEPARTMENT will accomplish the PROJECT through a Design Consultant, Design Consultant Team and/or Contractor, hereafter referred to as CONTRACTOR; and the utility owner hereafter referred to as the OWNER, and

Whereas, where OWNER has property rights ("Prior Rights") at the location of the PROJECT, OWNER will provide written evidence as to said prior rights within the area and will provide written documentation of prior rights relating to any individual crossing or Utility Facility, at the location of the PROJECT; and

Whereas, OWNER acknowledges that, generally, absent a showing of prior rights, the costs of relocation, protection, removal, or adjustment performed by OWNER shall be borne by OWNER; and

Whereas, pursuant to O.C.G.A. § 32-6-170(b), DEPARTMENT is authorized to pay or participate in the payment of the costs of relocation, protection, or adjustment of OWNER'S facilities where DEPARTMENT has made the determination that (i) such payments are in the best interest of the public and necessary in order to expedite the staging of the design-build project; and (ii) the costs of the removal, relocation, protection, or adjustment of such facilities are included as part of the Contract between the Department and the Department's roadway contractor for the design-build project; and

1. Type of Utility

OWNER has the following utility facilities which may need to be adjusted or relocated as a result of the proposed PROJECT:

Type of facility or facilities of OWNER:

_____Domestic water mains and distribution lines and associated appurtenances
_____Sanitary Sewer facilities and/or Storm Drainage System
___x__Electrical Distribution (overhead and underground) wires, poles, etc.
_____Electrical Transmission (overhead and underground) wires, poles, etc.
_____Natural Gas Distribution Facilities (underground)
_____Natural Gas Transmission Facilities (underground)
_____Petroleum Pipeline (underground)
_____Telecommunications facilities and equipment
_____Cable TV facilities
_____Street Lighting
_____Internet Data Service
_____Other Facilities (Description) _____

2. New Utility Facilities Proposed (Betterment)

OWNER desires the following to be installed as new additional facilities within the PROJECT. Insert here or attach a detailed description of proposed new additional utility installations:

N/A_____

_____

3. Assignment of Responsibilities for Design and Construction

This MEMORANDUM OF UNDERSTANDING and the following shall serve as a *basis* for assignment of responsibilities and costs for the DEPARTMENT, CONTRACTOR and the OWNER to enter into a Standard Utility Agreement (SUA) or Contract Item Agreement (CIA), if necessary, with OWNER once the PROJECT is awarded to the CONTRACTOR. For a PROJECT implementation, GDOT will not have in its possession exact costing plans to be utilized to determine exact locations of the removal, relocation, protection, or adjustment. However, Overhead/Subsurface Utility Engineering (SUE) investigations plans exist providing the best information and signifying the layout of known existing facilities. Please use these plans for developing the final determination of services as indicated below. The CONTRACTOR developed plans will be provided to the OWNER after the design build project is awarded by GDOT which shall be used by the CONTRACTOR as the final basis for the SUA or CIA. **Betterment costs will be the OWNER'S responsibility.**

NOTE: Water and Sewer Design and Construction relocation work put in the contract will automatically be accomplished by the DEPARTMENT'S CONTRACTOR. The UTILITY OWNER will still have design approval authority. (No Pre-Approved Contractor/Consultant List required, leave page 6 blank). If you are a Water & Sewer Utility and choose to put your relocation Design and Construction in the contract, please check Design and Construction under Option 2 under 3B. Owner's electing to perform their own design, at their own cost, please select design under 3C.

OWNER hereby intends to:

3A. OWNER, at the DEPARTMENT'S cost through an Agreement, will provide the following services for the properties for which it has established prior rights (Check to signify):

Design _____
Construction _____

3B. OWNER, at the CONTRACTOR'S cost, for any removal, relocation, protection, adjustment and/or design (Regardless of Prior Rights) will allow their facilities to be placed into the DEPARTMENT'S contract for the following services pursuant to O.C.G.A. § 32-6-170(b). The CONTRACTOR will add the removal, relocation, protection, materials, adjustment and/or design cost, excluding betterment, to the overall PROJECT's cost. (Check to signify):

Option 1: OWNER wants the work to be performed by the OWNER's pre-approved Design Consultants and/or Contractors.

Design _____
Construction _X__

Option 2: OWNER wants the DEPARTMENT'S CONTRACTOR to perform the design and/or construction. (Check to signify):

Design ____
Construction ____ **If both are checked, please leave page 6 blank.**

As per this section, all work necessary for the removal, relocation, protection, or adjustment of the described utilities in accordance with the plans when approved shall be included in the project contract and accomplished by the CONTRACTOR except as follows (Check none or list any work items to be performed by the OWNER)

None _____

Excluded Items _____

Comments: _____

3C. OWNER, at OWNER'S cost, will provide the following services (Check to signify):

Design __X__
Construction _____

The following is hereby mutually agreed to and understood by both parties:

1. The identification of existing facilities including preparation of Overhead/Subsurface Utility Engineering (SUE) investigations plans will be accomplished by the DEPARTMENT prior to award of the PROJECT and thereafter supplemented by the CONTRACTOR.

2. The CONTRACTOR shall coordinate reviews of the utility relocation information and obtain acceptance from the OWNER and DEPARTMENT when required. However; the OWNER shall apply for and obtain any required permits from the DEPARTMENT and perform any final design or proprietary design needed to administer its own relocation work if the work will not be included in the contract If the preliminary plans indicate that no conflict exists, and the OWNER concurs with this information, the OWNER shall provide a letter of "no conflict" to the CONTRACTOR.

3. After award of the PROJECT, the CONTRACTOR will research any claimed compensable property interest for each OWNER claiming prior rights under section 3A and present the findings to the DEPARTMENT and OWNER for approval. The plans and estimate for the utility work shall be subject to approval of both the DEPARTMENT and the OWNER prior to construction. If the OWNER chooses to perform its own relocations and the OWNER holds no property interest as stated above; the OWNER shall confirm in writing that the OWNER will relocate its own facilities at no cost to the DEPARTMENT or the CONTRACTOR.

4. All construction engineering and contract supervision shall be the responsibility of the DEPARTMENT and the CONTRACTOR to ensure that all utility work included in the contract is accomplished in accordance with the PROJECT's plans and specifications. The CONTRACTOR will consult with the OWNER before authorizing any changes or deviations which affect the OWNER's facility.

5. For utility work included in the contract, the CONTRACTOR shall ensure that the design/construction and installation of the OWNER'S facilities is performed by a contractor/design consultant pre-approved/registered with both the DEPARTMENT and the OWNER. For any work included in the contract, excluding water and sewer, the OWNER will provide a list of pre-approved/registered contractors/design consultants on page 6 of the MOU.

6. For Utility work included in the contract, the OWNER or the OWNER's Consultant shall have the right to visit and inspect the work at any time and advise the CONTRACTOR and the DEPARTMENT'S Engineer of any observed discrepancies or potential issues. The DEPARTMENT agrees to notify the OWNER when all utility work is completed and ready for final inspection by the OWNER.

7. Upon Maintenance Acceptance or Final Acceptance of the utility work included in the contract and upon certification by the DEPARTMENT'S Engineer and the OWNER that the work has been completed in accordance with the plans and specifications, the OWNER will accept the adjusted, relocated, and additional facilities and will thereafter operate and maintain said facilities located within the PROJECT right of way subject to the DEPARTMENT'S Utility Accommodations Policy and Standards Manual (UAM), current edition" and any agreements in effect without further cost to the DEPARTMENT or it's CONTRACTOR. Final acceptance of the utility relocation work is accomplished by the execution of the Utility Facility Relocation Acceptance Form. The CONTRACTOR shall provide the OWNER with a complete set of "As-Built Plans" for review and approval reflecting the relocation work performed by the CONTRACTOR. Upon completion of the Utility Facility Relocation Acceptance Form and the exchange of the final OWNER approved "As-Built Plans", the OWNER will operate and maintain the installed facilities going forward based on the date of execution of the Utility Facility Relocation Acceptance Form by the DEPARTMENT.

8. For utility coordination, relocation and reimbursement matters, the OWNER shall cooperate with the CONTRACTOR in the same manner as if coordinating directly with the DEPARTMENT in accordance with the laws of the State of Georgia, the DEPARTMENT'S UAM and any agreements in effect between the DEPARTMENT and OWNER. The OWNER agrees to cooperate in good faith with the CONTRACTOR and to respond to all requests for information or meetings required to reach a resolution of any disputed items.

9. All Utility work included in the PROJECT's contract and Utility work completed by the OWNER that is reimbursed by the DEPARTMENT through an agreement shall be in accordance with the BUY AMERICA requirements of the Federal regulations (23 U.S.C. 313 and 23 CFR 635.410) all manufacturing processes for steel and iron products or predominantly of steel or iron furnished for permanent incorporation into the work on this project shall occur in the United States. The only exception to this requirement is the production of pig iron and the processing, pelletizing and reduction of iron ore, which may occur in another country. Other than these exceptions, all melting, rolling, extruding, machining, bending, grinding, drilling, coating, etc. must occur in the United States.

    a. Products of steel include, but are not limited to, such products as structural steel piles, reinforcing steel, structural plate, steel culverts, and guardrail steel supports for signs, signals and luminaires. Products of iron include, but are not limited to, such products as cast iron frames and grates and ductile iron pipe. Coatings include, but are not limited to, the applications of epoxy, galvanizing and paint. The coating material is not limited to this clause, only the application process.

    b. A Certificate of Compliance shall be furnished for steel and iron products as part of the backup information with the billing. The form for this certification entitled "Buy America Certificate of Compliance" is attached to this agreement as "Exhibit A." Records to be maintained by the Developer for this certification shall include a signed mill test report and a signed certification by each supplier, distributor, fabricator, and manufacturer that has handled the steel or iron product affirming that every process, including the application of a coating, performed on the steel or iron product has been carried out in the United States of America, except as allowed by this Section. The lack of these certifications will be justification for rejection of the steel and/or iron product or nonpayment of the work.

The requirements of said law and regulations do not prevent the use of miscellaneous steel or iron components, subcomponents and hardware necessary to encase, assemble and construct the above products, manufactured products that are not predominantly steel or iron or a minimal use of foreign steel and iron materials if the cost of such materials used does not exceed one-tenth of one percent (0.1%) of the total contract price or $2,500.00, whichever is greater. The Memorandum of Understanding will be incorporated into the project contract by reference or Exhibit.

APPROVED FOR THE OWNER BY:

Jonathan Wm — 4/3/2018
(Signature) (Date)

DIRECTOR SYSTEM ENGINEERING
(Title)

APPROVED FOR THE DEPARTMENT BY:

5/31/18
(Signature) (Date)

STATE UTILITIES ADMINISTRATOR

Pre-Approved Contractor List

Company Name: Pike Electric – Overhead Contractors
Address: PO Box 868, 100 Pike Way, Mount Airy, North Carolina 27030
Phone: 770 601 2363
Contact Person: Daryl Harrison
E-Mail:

Note:
Jackson EMC only has this Overhead contractor under contract.

Company Name:
Address:
Phone:
Contact Person:
E-Mail:

Company Name:
Address:
Phone:
Contact Person:
E-Mail:

Please provide a minimum of three.

Pre-Approved Design Consultant List

Company Name:
Address:
Phone:
Contact Person:
E-Mail:

Company Name:
Address:
Phone:
Contact Person:
E-Mail:

Company Name:
Address:
Phone:
Contact Person:
E-Mail:

Georgia DOT Project: Bridge Replacement on SR 53 Westbound @ the Chattahoochee River
GDOT P.I. 0010212

DESIGN-BUILD
MEMORANDUM OF UNDERSTANDING
between the
Georgia Department of Transportation (hereafter the DEPARTMENT)
and
Southern Company Gas (hereafter the OWNER)

Whereas GDOT, hereafter referred to as the DEPARTMENT proposes to undertake a design-build project hereafter referred to as SR 53 Westbound @ the Chattahoochee River PROJECT to replace the bridge on SR 53 Westbound over the Chattahoochee River in Hall County, Georgia by contract through competitive bidding procedures; and,

Whereas the DEPARTMENT will accomplish the PROJECT through a Design Consultant, Design Consultant Team and/or Contractor, hereafter referred to as CONTRACTOR; and the utility owner hereafter referred to as the OWNER, and

Whereas, where OWNER has property rights ("Prior Rights") at the location of the PROJECT, OWNER will provide written evidence as to said prior rights within the area and will provide written documentation of prior rights relating to any individual crossing or Utility Facility, at the location of the PROJECT; and

Whereas, OWNER acknowledges that, generally, absent a showing of prior rights, the costs of relocation, protection, removal, or adjustment performed by OWNER shall be borne by OWNER; and

Whereas, pursuant to O.C.G.A. § 32-6-170(b), DEPARTMENT is authorized to pay or participate in the payment of the costs of relocation, protection, or adjustment of OWNER'S facilities where DEPARTMENT has made the determination that (i) such payments are in the best interest of the public and necessary in order to expedite the staging of the design-build project; and (ii) the costs of the removal, relocation, protection, or adjustment of such facilities are included as part of the Contract between the Department and the Department's roadway contractor for the design-build project; and

1. Type of Utility

OWNER has the following utility facilities which may need to be adjusted or relocated as a result of the proposed PROJECT:

Type of facility or facilities of OWNER:

_____Domestic water mains and distribution lines and associated appurtenances
_____Sanitary Sewer facilities and/or Storm Drainage System
_____Electrical Distribution (overhead and underground) wires, poles, etc.
_____Electrical Transmission (overhead and underground) wires, poles, etc.
__X__Natural Gas Distribution Facilities (underground)
_____Natural Gas Transmission Facilities (underground)
_____Petroleum Pipeline (underground)
_____Telecommunications facilities and equipment
_____Cable TV facilities
_____Street Lighting
_____Internet Data Service
_____Other Facilities (Description) _____

2. New Utility Facilities Proposed (Betterment)

OWNER desires the following to be installed as new additional facilities within the PROJECT. Insert here or attach a detailed description of proposed new additional utility installations:

_____

_____

3. Assignment of Responsibilities for Design and Construction

This MEMORANDUM OF UNDERSTANDING and the following shall serve as a *basis* for assignment of responsibilities and costs for the DEPARTMENT, CONTRACTOR and the OWNER to enter into a Standard Utility Agreement (SUA) or Contract Item Agreement (CIA), if necessary, with OWNER once the PROJECT is awarded to the CONTRACTOR. For a PROJECT implementation, GDOT will not have in its possession exact costing plans to be utilized to determine exact locations of the removal, relocation, protection, or adjustment. However, Overhead/Subsurface Utility Engineering (SUE) investigations plans exist providing the best information and signifying the layout of known existing facilities. Please use these plans for developing the final determination of services as indicated below. The CONTRACTOR developed plans will be provided to the OWNER after the design build project is awarded by GDOT which shall be used by the CONTRACTOR as the final basis for the SUA or CIA. **Betterment costs will be the OWNER'S responsibility.**

NOTE: Water and Sewer Design and Construction relocation work put in the contract will automatically be accomplished by the DEPARTMENT'S CONTRACTOR. The UTILITY OWNER will still have design approval authority. (No Pre-Approved Contractor/Consultant List required, leave page 6 blank). If you are a Water & Sewer Utility and choose to put your relocation Design and Construction in the contract, please check Design and Construction under Option 2 under 3B. Owner's electing to perform their own design, at their own cost, please select design under 3C.

OWNER hereby intends to:

3A. OWNER, at the DEPARTMENT'S cost through an Agreement, will provide the following services for the properties for which it has established prior rights (Check to signify):

Design _____
Construction _____

3B. OWNER, at the CONTRACTOR'S cost, for any removal, relocation, protection, adjustment and/or design (Regardless of Prior Rights) will allow their facilities to be placed into the DEPARTMENT'S contract for the following services pursuant to O.C.G.A. § 32-6-170(b). The CONTRACTOR will add the removal, relocation, protection, materials, adjustment and/or design cost, excluding betterment, to the overall PROJECT's cost. (Check to signify):

Option 1: OWNER wants the work to be performed by the OWNER's pre-approved Design Consultants and/or Contractors.

Design ____
Construction ✓

Option 2: OWNER wants the DEPARTMENT'S CONTRACTOR to perform the design and/or construction. (Check to signify):

Design ✓
Construction ____ **If both are checked, please leave page 6 blank.**

As per this section, all work necessary for the removal, relocation, protection, or adjustment of the described utilities in accordance with the plans when approved shall be included in the project contract and accomplished by the CONTRACTOR except as follows (Check none or list any work items to be performed by the OWNER)

None ✓

Excluded Items _____

Comments: _____

3C. OWNER, at OWNER'S cost, will provide the following services (Check to signify):

Design ____
Construction ____

The following is hereby mutually agreed to and understood by both parties:

1. The identification of existing facilities including preparation of Overhead/Subsurface Utility Engineering (SUE) investigations plans will be accomplished by the DEPARTMENT prior to award of the PROJECT and thereafter supplemented by the CONTRACTOR.

2. The CONTRACTOR shall coordinate reviews of the utility relocation information and obtain acceptance from the OWNER and DEPARTMENT when required. However; the OWNER shall apply for and obtain any required permits from the DEPARTMENT and perform any final design or proprietary design needed to administer its own relocation work if the work will not be included in the contract If the preliminary plans indicate that no conflict exists, and the OWNER concurs with this information, the OWNER shall provide a letter of "no conflict" to the CONTRACTOR.

3. After award of the PROJECT, the CONTRACTOR will research any claimed compensable property interest for each OWNER claiming prior rights under section 3A and present the findings to the DEPARTMENT and OWNER for approval. The plans and estimate for the utility work shall be subject to approval of both the DEPARTMENT and the OWNER prior to construction. If the OWNER chooses to perform its own relocations and the OWNER holds no property interest as stated above; the OWNER shall confirm in writing that the OWNER will relocate its own facilities at no cost to the DEPARTMENT or the CONTRACTOR.

4. All construction engineering and contract supervision shall be the responsibility of the DEPARTMENT and the CONTRACTOR to ensure that all utility work included in the contract is accomplished in accordance with the PROJECT's plans and specifications. The CONTRACTOR will consult with the OWNER before authorizing any changes or deviations which affect the OWNER's facility.

5. For utility work included in the contract, the CONTRACTOR shall ensure that the design/construction and installation of the OWNER'S facilities is performed by a contractor/design consultant pre-approved/registered with both the DEPARTMENT and the OWNER. For any work included in the contract, excluding water and sewer, the OWNER will provide a list of pre-approved/registered contractors/design consultants on page 6 of the MOU.

6. For Utility work included in the contract, the OWNER or the OWNER's Consultant shall have the right to visit and inspect the work at any time and advise the CONTRACTOR and the DEPARTMENT'S Engineer of any observed discrepancies or potential issues. The DEPARTMENT agrees to notify the OWNER when all utility work is completed and ready for final inspection by the OWNER.

7. Upon Maintenance Acceptance or Final Acceptance of the utility work included in the contract and upon certification by the DEPARTMENT'S Engineer and the OWNER that the work has been completed in accordance with the plans and specifications, the OWNER will accept the adjusted, relocated, and additional facilities and will thereafter operate and maintain said facilities located within the PROJECT right of way subject to the DEPARTMENT'S Utility Accommodations Policy and Standards Manual (UAM), current edition" and any agreements in effect without further cost to the DEPARTMENT or it's CONTRACTOR. Final acceptance of the utility relocation work is accomplished by the execution of the Utility Facility Relocation Acceptance Form. The CONTRACTOR shall provide the OWNER with a complete set of "As-Built Plans" for review and approval reflecting the relocation work performed by the CONTRACTOR. Upon completion of the Utility Facility Relocation Acceptance Form and the exchange of the final OWNER approved "As-Built Plans", the OWNER will operate and maintain the installed facilities going forward based on the date of execution of the Utility Facility Relocation Acceptance Form by the DEPARTMENT.

8. For utility coordination, relocation and reimbursement matters, the OWNER shall cooperate with the CONTRACTOR in the same manner as if coordinating directly with the DEPARTMENT in accordance with the laws of the State of Georgia, the DEPARTMENT'S UAM and any agreements in effect between the DEPARTMENT and OWNER. The OWNER agrees to cooperate in good faith with the CONTRACTOR and to respond to all requests for information or meetings required to reach a resolution of any disputed items.

9. All Utility work included in the PROJECT's contract and Utility work completed by the OWNER that is reimbursed by the DEPARTMENT through an agreement shall be in accordance with the BUY AMERICA requirements of the Federal regulations (23 U.S.C. 313 and 23 CFR 635.410) all manufacturing processes for steel and iron products or predominantly of steel or iron furnished for permanent incorporation into the work on this project shall occur in the United States. The only exception to this requirement is the production of pig iron and the processing, pelletizing and reduction of iron ore, which may occur in another country. Other than these exceptions, all melting, rolling, extruding, machining, bending, grinding, drilling, coating, etc. must occur in the United States.

    a. Products of steel include, but are not limited to, such products as structural steel piles, reinforcing steel, structural plate, steel culverts, and guardrail steel supports for signs, signals and luminaires. Products of iron include, but are not limited to, such products as cast iron frames and grates and ductile iron pipe. Coatings include, but are not limited to, the applications of epoxy, galvanizing and paint. The coating material is not limited to this clause, only the application process.

    b. A Certificate of Compliance shall be furnished for steel and iron products as part of the backup information with the billing. The form for this certification entitled "Buy America Certificate of Compliance" is attached to this agreement as "Exhibit A." Records to be maintained by the Developer for this certification shall include a signed mill test report and a signed certification by each supplier, distributor, fabricator, and manufacturer that has handled the steel or iron product affirming that every process, including the application of a coating, performed on the steel or iron product has been carried out in the United States of America, except as allowed by this Section. The lack of these certifications will be justification for rejection of the steel and/or iron product or nonpayment of the work.

The requirements of said law and regulations do not prevent the use of miscellaneous steel or iron components, subcomponents and hardware necessary to encase, assemble and construct the above products, manufactured products that are not predominantly steel or iron or a minimal use of foreign steel and iron materials if the cost of such materials used does not exceed one-tenth of one percent (0.1%) of the total contract price or $2,500.00, whichever is greater. The Memorandum of Understanding will be incorporated into the project contract by reference or Exhibit.

APPROVED FOR THE OWNER BY:

Gene W. Killingsp — 3/21/2018
(Signature) (Date)

VP OPERATIONS
(Title)

APPROVED FOR THE DEPARTMENT BY:

[illegible] — 3/31/18
(Signature) (Date)

STATE UTILITIES ADMINISTRATOR

Pre-Approved Contractor List

*See Attached

Company Name:
Address:
Phone:
Contact Person:
E-Mail:

Company Name:
Address:
Phone:
Contact Person:
E-Mail:

Company Name:
Address:
Phone:
Contact Person:
E-Mail:

Please provide a minimum of three.

Pre-Approved Design Consultant List

*N/A

Company Name:
Address:
Phone:
Contact Person:
E-Mail:

Company Name:
Address:
Phone:
Contact Person:
E-Mail:

Company Name:
Address:
Phone:
Contact Person:
E-Mail:

Approved AGL Contractors - Contact List for GDOT Move In Contract Work

Note: The list below contains active and approved pipeline contractors that perform work for Atlanta Gas Light as of 4/27/17. Road Contractors should always reach out directly to Rob Hembree (rhembree@southernco.com.com) and Brian Leavell (bleavell@southernco.com.com) for the most current list of available contractors. Please note the limitations column to ensure that the Contractors you are contacting are currently approved to complete the necessary gas work for your

Limitations	First Name	Last Name	Company Name	City	State	Title	Work Phone	WorkExtn	Email Name
no steel pipe larger than 6"	Lamar	Andrews	CEDS Construction	Cumming	Georgia	Supervisor	770-889-2361	16	landrews_ceds@bellsouth.net
	Chad	Roebuck		Cumming	Georgia	Supervisor	770-889-2361	16	croebuck1_ceds@bellsouth.net
no steel pipe	Lance	Souther	D Lance Souther, Inc.	Macon	GA	President	478-742-2292		lance@dlsi.us
	Edmund	Zammit		Macon	GA	Manager	478-742-2292		edmund@dlsi.us
no projects outside NW GA	SD	Newman	Hiwassee Construction Company, Inc.	Calhoun	TN	Owner	423-421-3030		Only available by cell. Email Todd at Hiwassee Construction address below when needed.
	Todd	Newman	Hiwassee Construction Company, Inc.	Calhoun	TN		423-667-0576		todd@hiwasseeconstruction.com
no steel pipe	Eugene	McCallie	Hunter Utility	Birchwood	TN	Operations Manager	423-240-9896		Hunterutility@aol.com
no plastic pipe	Dooley	Eaves	Troy Construction, LLC	Commerce	GA	Vice President	706-336-0063		deaves@troyconstruction.com
	Casey	Colbey		Commerce	GA	Estimating/Project Management	706-336-0063		ccolbey@troyconstruction.com
no steel pipe larger than 6"	Tony	Pittman	Southern Pipeline, Inc.	Winder	Georgia	Owner	770-589-5184		tpittman@southernpipeline.org
	Jhonny	Phommaly		Winder	Georgia	Computer IT/Engineer	678-963-5676		jphommaly@southernpipeline.org
no steel pipe larger than 12"	Payton	Crawford	Pride Utility	Gainesville	Georgia	Operation Manager	770-532-0085		pcrawford@prideutility.com
	Scott	Case	Pride Utility	Gainesville	Georgia	Vice President/Sec	770-532-0085		scase@prideutility.com
	Tom	Pridemore	Pride Utility	Gainesville	Georgia	President	770-532-0085		tpridemore@prideutility.com
	Matt	Pridemore	Pride Utility	Gainesville	Georgia		770-532-0086		mpridemore@prideutility.com
no steel pipe larger than 12" & over 1 mile long	Bryan	Boyd	Gunter Construction Company, Inc.	Lawrenceville	Georgia	President	770-963-7760	201	bboyd@gunterconst.com
	Chad	Zeis	Gunter Construction Company, Inc.	Lawrenceville	Georgia	Vice President	770-963-7760	203	chad@gunterconst.com
no limitations	Kevin	Adams	Southeast Connections	Conyers	GA	VP Operations	404-659-1422	240	kadams@seconnections.com
	Kyle	Ormsby	Southeast Connections	Conyers	GA	Senior Vice President	404-659-1422	227	Kormsby@seconnections.com
no steel larger than 4"	Walter	Thomas	Thomas Utility Contractors	Augusta	GA	Pres.	706-737-0042		tuci@bellsouth.net
	David	Mize		Augusta	GA	VP	706-737-0042		tuci@bellsouth.net
no limitations	Doug	Greene	Benton-Georgia, LLC	Douglasville	GA	Div Manager	770-942-8180	120	dgreene@benton-georgia.com
	Scott	Bailey	Benton-Georgia, LLC	Douglasville	GA	Estimator	770-942-8180	0	sbailey@benton-georgia.com
	Eric	Bonner	Benton-Georgia, LLC	Douglasville	GA	Estimator	770-942-8180	0	ebonner@benton-georgia.com
no limitations	Jason	Aldredge	Diversified Utility Services	MORROW	GA	MANAGER	678-618-4696		jason.aldredge@dusllc.com
			Diversified Utility Services	MORROW	GA	MANAGER			

Georgia Department of Transportation

Technical Provisions

For

Design-Build Agreement

P.I. No. 0010212

Attachment 6-3

UTILITY FACILITY RELOCATION ACCEPTANCE FORM TEMPLATE

Original: 3/15/2016

Utility Facility Relocation Acceptance Form

Project PI Number: 0010212
Project Number:
County(ies): Hall
Project Description:
Utility Owner Name:_____

Type of Utility Facilities Installed by Contractor:_____

_____

Type of Relocation Work Described Herein (Circle One): Initial Relocation or Revised

Relocation Station Limits:_____

_____

General Description of Utility Facilities Installed by Contractor:_____

_____

_____

_____

Utility Work Completion Date:_____

This Utility Facility Relocation Acceptance Form shall be completed by the Contractor's Worksite Utility Coordination Supervisor (WUCS). It shall also be signed by an authorized representative of the Utility Owner and by the GDOT Project Manager upon completion and acceptance of the work described herein.
Execution of this Utility Facility Relocation Acceptance Form by the parties below provides acknowledgement that the work described above, has been visually inspected and accepted by the Utility Owner as to having been constructed in accordance with the Utility Owner approved relocation design plans and their current specifications and the requirements of the Memorandum of Understanding (MOU) as executed by the Utility Owner. Further, the Contractor's WUCS shall provide the Utility Owner with a complete set of "As-Built Plans" for review and approval reflecting the relocation work performed by the Contractor as outlined in the Contract Specifications. Upon completion of this form and the exchange of the final Utility Owner approved "As-Built Plans", all parties agree the Utility Owner will operate and maintain the installed facilities covered by this document going forward based on the date of execution by the GDOT Project Manager (PM). However, any items inadvertently overlooked and as identified in a subsequent utility punch list shall still be the responsibility of the Contractor to correct and provide up to date "As-Built Plans" to the Utility Owner.

Acceptance of this form by the Department does not confer legitimacy and accuracy or in any way transfers liability for errors or omissions made by the preparer.

Contractor's WUCS:

Printed Name: _____ Date: _____

Signature: _____ Title: _____

Utility Owner Representative:

Printed Name: _____ Date: _____

Signature: _____ Title: _____

GDOT Project Manager:

Printed Name: _____ Date: _____

Signature: _____ Title: _____

Georgia Department of Transportation

Technical Provisions

For

Design-Build Agreement

P.I. No. 0010212

Attachment 11-1

DESIGN CRITERIA TABLE

Attachment 11-1

Road Design Criteria
PI 0010212

GENERAL - DESIGN ELEMENTS	SR 53 WB DE1	COMMENTS / REMARKS
Roadway Classification	Principal Arterial - Rural	
Design Vehicle	WB-67	
Design Speed	55 mph	
Min. Stopping Sight Distance	495-ft	On-level roadway
Max. Super-elevation rate (emax.)	6%	
Min. Radius of Curvature	1,650-ft	
Maximum Grade	5%	
Crest Vertical Curve (min. K value)	114	
Sag Vertical Curve (min. K value)	115	
Number of Lanes	2 in each direction	
Lane-Width	12-ft	
Median Type	Median 32-ft Depressed	
Inside Shoulder-Width (min.)	6-ft total	
	2-ft paved	
Outside Shoulder-Width (min.)	10-ft total	
	6.5-ft paved	
Normal Cross-Slope:		
up to 2 Lanes in one direction	2%	
Outside Shoulders	4%	8% max breakover
Side Slopes:		
Normal Slope	6:1	
Maximum Slope	2:1	

Georgia Department of Transportation

Technical Provisions

For

Design-Build Agreement

P.I. No. 0010212

Attachment 11-2

PAVEMENT DESIGNS

Attachment 11-2

Pavement Designs
PI 0010212

SR 53 Mainline & Shoulder	
Material	**Spread Rate**
Recycled Asph Conc 12.5 mm Superpave, GP 2 Only, incl Bitum Matl & H Lime	165 lb/sy
Recycled Asph Conc 19 mm Superpave, GP 1 or 2, incl Bitum Matl & H Lime	220 lb/sy
Recycled Asph Conc 25 mm Superpave, GP 1 or 2, incl Bitum Matl & H Lime	770 lb/sy
GAB – 12 inches	

SR 53 Overlay	
Material	**Spread Rate**
Recycled Asph Conc 12.5 mm Superpave, GP 2 Only, incl Bitum Matl & H Lime	165 lb/sy
Recycled Asph Conc 19 mm Superpave, GP 1 or 2, incl Bitum Matl & H Lime	220 lb/sy
Leveling Asph Conc leveling, incl Bitum Matl & H Lime	Varies (As Required)

Georgia Department of Transportation

Technical Provisions

For

Design-Build Agreement

P.I. No. 0010212

Attachment 11-3

FABRIC DETAIL

Attachment 11-3
Fabric Detail
PI 0010212

TYPICAL SECTION DETAIL TO BE USED WHEN
EXISTING PAVEMENT IS TO BE RESURFACED WITH
TWO INCHES OR MORE OF ASPHALTIC CONCRETE

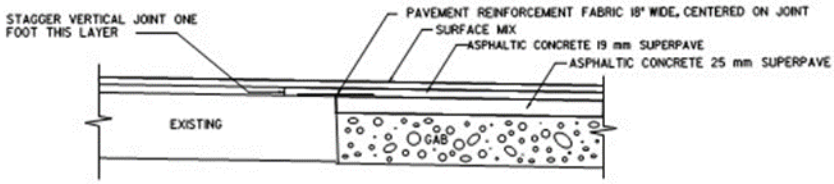

TYPICAL SECTION DETAIL TO BE USED WHEN
EXISTING PAVEMENT IS TO BE RESURFACED WITH
LESS THAN TWO INCHES OF ASPHALTIC CONCRETE

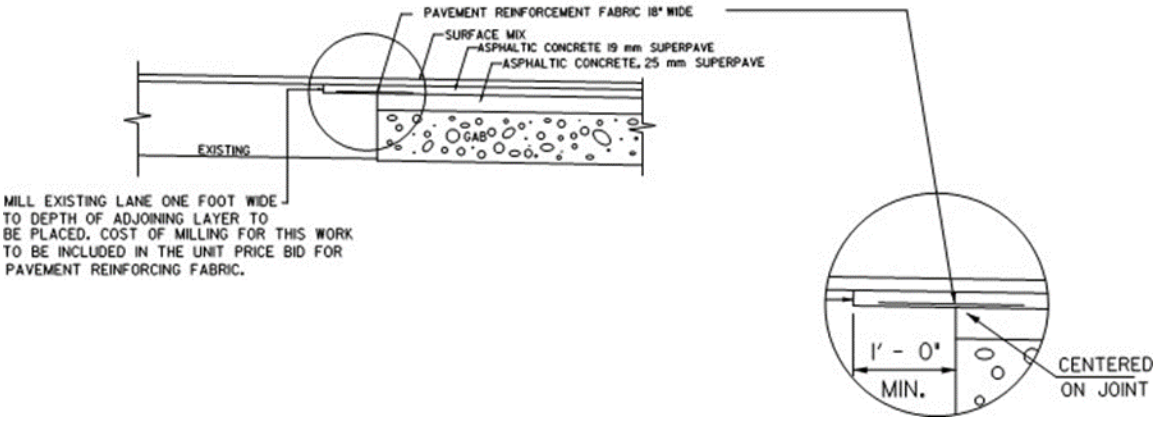

Georgia Department of Transportation

Technical Provisions

For

Design-Build Agreement

P.I. No. 0010212

Attachment 12-1

MS4 RESPONSIBILITIES FOR DESIGN-BUILD PROJECT

Attachment 12-1
PI 0010212
MS4 Responsibilities – Design-Build Project

2017-2022 Permit No. GAR041000 Ref.	Best Management Practice (BMP)	Activity Description	Design-Build Team	GDOT	PMC	3rd Party
4.2.1	**Public Education**					
4.2.1-1	DOT website to educate the public regarding stormwater related topics (e.g. litter prevention, Adopt-A-Highway)	N/A		✓		
4.2.1-2	Training program to educate contractors and employees conducting activities that may impact stormwater runoff	Attend periodic training related to stormwater impacts including Construction Engineering & Inspection for Post-Construction BMPs (CEI) course, Facility Stormwater Pollution Prevention (F-SWPP) and Overview of Post-Construction Stormwater (O-PCS).	✓	✓	✓	✓
4.2.1-3	Distribution of stormwater related educational materials to the public	N/A		✓		
4.2.1-4	Storm draining marking, and/or pet waste program in high pedestrian areas, such as welcome centers/ rest areas, maintenance facilities, and along streets with sidewalks within a permitted area	N/A		✓		
4.2.2	**Public Involvement**					
4.2.2-1	Adopt-A-Highway Program	N/A		✓		
4.2.2-2	Public Information Open Houses (PIOHs) to allow public input into projects	Conduct all appropriate public information open houses as applicable. As part of each public information open house, contact GDOT Office of Design Policy to ensure that a Stormwater Management Program display is provided and displayed at the open house. Provide the number of open houses conducted each year.	✓			
4.2.2-3	Memorandum of Agreements	N/A		✓		
4.2.3	Illicit Discharge Detection and Elimination					
4.2.3-1	Outfall Map and Inventory	Provide a list of new outfalls within the project area indicating the location and geographic coordinates for each outfall. Provide all information per SP 156.	✓			
4.2.3-2	A policy that prohibits non-stormwater discharges into the MS4	N/A		✓		

2017-2022 Permit No. GAR041000 Ref.	Best Management Practice (BMP)	Activity Description	Design-Build Team	GDOT	PMC	3rd Party
4.2.3-3	An Illicit Discharge Detection and Elimination (IDDE) Plan	Conduct inspections outfalls within the project area each year inspecting the outfalls for the presence of dry weather discharges in accordance with the IDDE plan. For a copy of the IDDE plan, contact the GDOT Office of Design Policy. Provide a copy of the inspection reports (see the IDDE plan) for each outfall inspected. If a dry weather discharge is detected, contact the District Environmental Compliance Engineer for further investigation / action.		✓		
4.2.3-4	Procedures for tracing and eliminating any identified illicit discharges	N/A		✓		
4.2.3-5	Education	N/A		✓		
4.2.3-6	Procedures for receiving and responding to complaints related to illicit discharges	Report all complaints related to illicit discharges to the District Environmental Compliance Engineer. Provide a summary of the number of complaints and summary of resolution including the date and time received each year for the project area to GDOT.		✓		
4.2.3-7	Spill response procedures	Report all spills in accordance with the IDDE plan and the Georgia Oil or Hazardous Material Spills and Releases Reporting. If a spill occurs and the spill reaches an MS4 structure, report the spill to the District Environmental Compliance Engineer.	✓			
4.2.4	**Construction Site Runoff Stormwater Control**					
4.2.4-1	A contractual obligation mechanism	Requires erosion and sediment controls consistent with the Manual for Erosion and Sediment Control in Georgia and the Construction General Permits, as well as penalties to ensure compliance, to the extent allowable, under State or local law.	✓			
4.2.4-2	Erosion, Sedimentation and Pollution Control Plans (ESPCPs)	Prepare and submit to EPD an ESPCP that complies with the requirements of the most recent Construction Activity Permits, which identify the Manual for Erosion and Sediment Control in Georgia (Green Book) and stream buffer requirements for all land disturbance activities that require coverage.	✓			
4.2.4-3	Procedures for receiving and responding to erosion and sedimentation complaints	Report all complaints related to construction site runoff to the District Environmental Compliance Engineer. Provide a summary of the number of complaints and summary of resolution including the date and time received each year for the project area to GDOT.	✓			
4.2.4-4	Site plan review procedures	Incorporate consideration of potential water quality impacts.	✓			
4.2.4-5	Site inspection procedures in accordance with the Construction Activity Permits	Maintain inspections as required in the most recent Construction Activity Permits, which identify the Manual for Erosion and Sediment Control in Georgia (Green Book) and stream buffer requirements for all land disturbance activities that require coverage. Provide a copy of all inspections performed.	✓			

2017-2022 Permit No. GAR041000 Ref.	Best Management Practice (BMP)	Activity Description	Design-Build Team	GDOT	PMC	3rd Party
4.2.4-6	Ensure through contracts or other mechanisms that construction site operators control waste that may cause adverse water quality impacts in accordance with the Construction Activity Permits		✓		✓	✓
4.2.4-7	Procedures for bringing contractors back into compliance with the contract requirements	N/A			✓	✓
4.2.5	Post-Construction Stormwater Management					
4.2.5-1	Inventory of post-construction stormwater management structures, designed for filtering and/or detention	Provide an inventory of all permanent Post Construction Stormwater management structures following GDOT acceptance utilizing SP 156 for required data to be provided on each structure.	✓			
4.2.5-2	Policy or other regulatory mechanism to address post-construction runoff	N/A		✓		
4.2.5-3	Program for the long-term operation and maintenance of post-construction structures	Inspect and maintain Post Construction Stormwater management structures within the project area utilizing the inspection forms in the current effective GDOT Stormwater System Inspection & Maintenance (I&M) Manual. Report all maintenance performed on each structure utilizing GDOT Maintenance Activity Codes.	✓			
4.2.5-4	Program for ensuring the use of a stormwater design manual and the feasibility of inclusion of the post-construction standards from Section 4.2.5.1 during the project design phase	Submit and secure approval of a Post Construction Stormwater Report for all applicable construction projects within the project area following the specifications in the most current GDOT Drainage Manual.	✓			
4.2.5.4	Green Instructure / Low Impact Development					
4.2.5.4-1	Program for conducting a green infrastructure / low impact development (GI/LID) feasibility study, and implementing GI/LID infrastructure, where feasible	Submit and secure approval of a Post Construction Stormwater Report for all applicable construction projects within the project area following the specifications in the most current GDOT Drainage Manual.	✓			
4.2.6	Pollution Prevention / Good Housekeeping for Municipal-Type Operations					
4.2.6-1	Inventory of GDOT facilities conducting municipal-type activities that have the potential to cause pollutant runoff	N/A		✓		

2017-2022 Permit No. GAR041000 Ref.	Best Management Practice (BMP)	Activity Description	Design-Build Team	GDOT	PMC	3rd Party
4.2.6-2	Program for inspecting the GDOT facilities for good housekeeping practices	Perform inspections on 20% of all GDOT accepted facilities annually utilizing the F-SWPPP such that all facilities are inspected over the course of 5 years.		✓		
4.2.6-3	Manual detailing procedures for routine maintenance activities at municipal type operations to prevent pollutant runoff	Provide an annual copy of inspections and corrective actions implemented for each GDOT accepted facility utilizing the F-SWPPP for guidance.		✓		
4.2.6-4	Inventory and Map of MS4 structures	Provide an inventory of all MS4 structures following GDOT acceptance utilizing SP 156 for required data to be provided on each structure.	✓			
4.2.6-5	Program for inspecting and maintaining MS4 structures	Perform inspections on 10% of all GDOT MS4 structures within the project area annually utilizing the GDOT Stormwater System Inspection & Maintenance Manual such that all structures are inspected over the course of 5 years. Report all maintenance performed on each structure utilizing GDOT Maintenance Activity Codes.		✓		
4.2.6-6	An employee training program, with the purpose of preventing and reducing stormwater pollution from GDOT facilities and activities	All field personnel with supervisory capacity assigned to the project must have attended a GDOT F-SWPP training course within 5 years of the contract date of the project. For those personnel that have not attended the training course within the previous 5 years, the training course must be completed within 6 months of assignment to the project.	✓			
4.2.6-7	Procedures for receiving and responding to complaints related to MS4 structures	Report all complaints related to runoff / pollution from GDOT accepted facilities within the project area to the District Environmental Compliance Engineer. Provide a summary of the number of complaints and summary of resolution including the date and time received each year for the project area to GDOT.		✓		

Reporting:

GDOT's NPDES Phase II MS4 permit requires that an annual report be submitted each year documenting compliance with all aspects of the permit from January 1st to December 31st (reporting period). To aid in that reporting, the contractor shall submit quarterly update reports documenting those activities undertaken during the reporting period as required in the matrix above. The deadlines for each update report shall be established as shown below:

Quarter	Dates	Quarterly Update Report Due Date
Q1	January 1st – March 31st	April 30th
Q2	April 1st – June 30th	July 31st
Q3	July 1st – September 30th	October 31st
Q4	October 1st – December 31st	January 31st

Georgia Department of Transportation

Technical Provisions

For

Design-Build Agreement

P.I. No. 0010212

Attachment 12-2

SPECIAL PROVISION FOR POST-CONSTRUCTION STORMWATER BMP ITEMS

SP 169 Post-Construction Stormwater BMP Items

December 18, 2018

DEPARTMENT OF TRANSPORTATION
STATE OF GEORGIA

PROJECT SPECIAL PROVISION

Section 169—Post-Construction Stormwater BMP Items

169.1 General Description

This work includes constructing the following Best Management Practices (BMPs) as shown in the Plans or as directed by the Engineer:

- Bioretention basins
- Bioslopes
- Dry detention basins
- Enhanced dry swales
- Enhanced wet swales
- Infiltration trenches
- Sand filters
- Wet detention ponds
- Other permanent water treatment structures as shown on the Plans or as directed by the Engineer

169.1.01 Related References

A. Standard Specifications

Section 109—Measurement and Payment

Section 161—Control of Soil Erosion and Sedimentation

Section 208—Embankments

Section 500—Concrete Structures

Section 511—Reinforcement Steel

Section 573—Underdrains

Section 574—Edge Drains

Section 603—Rip Rap

Section 700—Grassing

Section 702—Vine, Shrub, and Tree Planting

Section 708—Plant Topsoil

Section 711—Turf Reinforcement Matting

Section 800—Coarse Aggregate

Section 801—Fine Aggregate

Section 805—Rip Rap and Curbing Stone

Section 806—Aggregate for Drainage

Section 814—Soil Base Materials

Section 830—Portland Cement

Section 839—Corrugated Polyethylene Underdrain Pipe

Section 846—Polyvinyl Chloride (PVC) Drain Pipe

Section 853—Reinforcement and Tensioning Steel

Section 881—Fabrics

Section 890—Seed and Sod

Section 893—Miscellaneous Planting Materials

Section 894—Fencing

Section 910—Sign Fabrication

Section 911—Sign Posts

Section 914—Sign Paint

B. Referenced Documents

AASHTO M-252

AASHTO M-294

AASHTO M-304

AASHTO T 215

ASTM D-422

ASTM D-698

ASTM D-1784

ASTM D-1785

ASTM D-2434

ASTM D-2466

ASTM D-2564

ASTM D-2665

ASTM D-3786

ASTM D-4491

ASTM D-4533

ASTM D-4632

ASTM D-4751

ASTM D-4833

ASTM F-758

ASTM F-949

169.1.02 Submittals

General Provisions 101 through 150.

169.2 Materials

Provide materials shown on the Plans, such as pipe, spillways, wood baffles, plants, and other accessories including an anti-seep collar, when necessary. Materials shall be approved by the Engineer before use.

Materials shall meet the requirements of the following Specifications:

Material	GDOT Section/Requirement
Nonwoven filter fabric	ASTM D-3786: Mullen burst strength = 280 psi ASTM D-4491: permittivity = 1.30 sec^{-1} ASTM D-4533: Trapezoidal tear strength = 60 lb ASTM D-4632: Grab tensile strength = 160 lb ASTM D-4632: Grab tensile elongation = 50% ASTM D-4751: AOS = 70 US standard sieve ASTM D-4833: Puncture Resistance = 85 lb
Class A, AA, and B Concrete	500/ASTM C-76-10
Reinforcement Steel	511
Rip Rap	603, 805
Permanent Grass, Sod, and Other Vegetation	700
Turf Reinforcement Matting	711
Coarse Aggregate	800
Fine Aggregate	801
Soil Base Materials	814
Rip Rap and Curbing Stone	805
Portland Cement	830
Corrugated Polyethylene Underdrain Pipe	839/AASHTO M252 or M294
PVC Underdrains	846/ASTM F-758, ASTM F-949
Reinforcement and Tensioning Steel	853
Fabrics	881
Seed	890
Miscellaneous Planting Materials	893
Mulch	893.2.02
Signage	910, 911, 914
Landscape Plantings	702

A. Engineered Soil Mix Requirements

1. Use an engineered soil mix that meets the requirements herein. Do not use a mixture that contains deleterious substances. Obtain the materials from sources approved by the Engineer. Ensure that aggregate retained on No. 10 (2 mm) sieve is of hard, durable particles.
2. Remove particles with a diameter greater than 2 in (50 mm) before placing the engineered soil mix. Remove particles with screens or by hand if few oversized pieces exist. Otherwise, crush the oversized pieces to less than 2 in and use them in the proportions shown by the gradation table below.
3. Use 5-10% by dry weight composted organic matter as soil components. All components shall be free of heavy metals, pathogens, pesticides, and herbicides.

4. Use 90-95% by dry weight inorganic soil components with the following properties:

Sieve Size	Percent Passing by Weight
Passing 2 in (50 mm)	100
Passing No. 4 (4.75mm)	98-100
Passing No. 8 (2.36 mm) sieve	95-100
Passing No. 10 (2.0 mm)	86-100
Passing No. 16 (1.18 mm) sieve	70-100
Passing No. 30 (600 µm) sieve	40-75
Passing No. 50 (300 µm) sieve	10-35
Passing No. 100 (150 µm) sieve	2-15
Passing No. 200 (75 µm) sieve	0-10
Clay size (< 2 µm)	0-6

5. Ensure that material passing the No. 10 (2 mm) sieve meets the following requirements:

Property	Value
Liquid Limit (LL)	≤25
Plasticity Index (PI)	≤10
Volume Change, Maximum Percent	12
Maximum Dry Density, lb/ft³*	105
Permeability (in/hr)	1 – 6
Phosphorous Index (P-index)	<25
*by standard Proctor	

169.2.01 Fabrication

General Provisions 101 through 150.

169.2.02 Acceptance

The Contractor is required to submit a minimum of three (3) cubic-foot-sized random soil samples per 150 tons of material per each source to the Department's Geotechnical Bureau of the Materials Office 20 working days before placement for testing to ensure acceptability for use as directed by the Project Engineer. The Department's Geotechnical Bureau of the Materials Office reserves the right to disapprove the engineered soil mix for use if test results show that parameters do not meet the acceptable values specified above. Acceptance must be granted prior to placement.

The Department will test engineered soil mix as follows:

Test	Method
Soil Gradation	GDT 4
Volume Change	GDT 6
Maximum Density	GDT 7 or GDT 67

Liquid Limit	AASHTO T 89
Plastic Limit and Plasticity Index	AASHTO T 90
Permeability	AASHTO T 215

169.2.03 Materials Warranty

General Provisions 101 through 150.

169.2.04 Delivery, Storage, and Handling

General Provisions 101 through 150.

169.3 Construction Requirements

169.3.01 Personnel

General Provisions 101 through 150.

169.3.02 Equipment

General Provisions 101 through 150.

169.3.03 Preparation

General Provisions 101 through 150.

169.3.04 Fabrication

General Provisions 101 through 150.

169.3.05 Construction

A. Bioretention Basins

Construct bioretention basins as shown in the Plans, or as modified by the Engineer, after final grade and stabilization of the area upstream of each bioretention basin are achieved. If this is not feasible, stormwater flow shall be diverted around the bioretention basin and the basin area protected with temporary erosion and sediment control measures. Once the basin has been stabilized, vegetation shall be established within the bioretention basin per the details shown in the plans. Contractor shall maintain the bioretention basin after construction as outlined in the GDOT Stormwater System Inspection and Maintenance Manual until the project is turned over.

1. Excavation

Excavation should be limited to the width and length of the bioretention basin per the details shown in the plans or as directed by the Engineer. Avoid placing excavated material near the open trench so as not to jeopardize the stability of the trench sidewalls. The bottom of the excavated trench should be flat across its width and length, shall not be loaded in a way that causes soil compaction, and should be scarified prior to placement of specified materials. The sides of the trench shall be trimmed of all large roots. The sidewalls should be uniform with no voids and scarified prior to placement of materials for specified engineered drainage layers. Trench sidewalls shall be lined with the specified filter fabric. Infiltration testing should be performed prior to excavation of the bioretention basin if the bioretention basin is designed for infiltration. If infiltration is feasible, a second infiltration test is required prior to the placement of the underdrain system/aggregate layer to ensure that infiltration rates were not impacted during excavation.

2. Underdrain System/Aggregate Layer

Install underdrain system(s) made of perforated polyethylene or perforated PVC pipe at the locations and depth per details shown in the plans for conveyance of stormwater that has filtered through the media. Perforations shall be 3/8-inch diameter and spaced 6-inches on center with four rows running longitudinally. A removable end cap connected to the underdrain system shall be installed per the details shown in the plans. If infiltration is feasible, the end cap shall be closed except for emergency drainage or maintenance purposes. The underdrain pipe shall be surrounded by an aggregate layer as defined in the details and a 2-3-inch filter blanket of size No. 89 aggregate (Georgia Department of Transportation

Specification Section 800) shall be used to segregate the aggregate layer from the engineered soil mix. Aggregates used in underdrain systems shall be double washed and free of fines and organic materials. Cleanouts shall be provided at the end of each underdrain branch. Cleanouts shall extend to an elevation such that they are accessible once the trench is backfilled with the specified media, and shall have a locking screw top lid, to discourage vandalism and tampering.

3. Engineered Soil Mix

Install the engineered soil mix specified above for a 24-inch-minimum-thickness and nonwoven plastic filter fabric per the details shown in the plans. The engineered soil mix shall be placed in a maximum of 12-inch lifts and shall be protected from contamination by foreign matter during installation. If the engineered soil mix becomes contaminated or the filter fabric is damaged, remove contaminated or damaged materials and replace them at no additional cost to the Department. Avoid using heavy equipment within the basin area during installation to avoid compromising the hydraulic conductivity of the engineered soil mix and to prevent damage to the underdrains.

4. Mulch Layer

The mulch layer of the bioretention basin shall be a minimum thickness of 3 inches and shall consist of triple shredded hardwood mulch resistant to floating (Georgia Department of Transportation Specification Subsection 893.2.02). The mulch layer should be well aged (stockpiled or stored for at least six months), uniform in color, and free of other materials, such as weed seeds, soil, roots, etc. Grass clippings or pine straw shall not be used as mulch material.

5. Plantings

Plant species used in bioretention basins shall be installed per the details shown in the plans and meet the requirements outlined in Georgia Department of Transportation Specification Section 702. Plants shall be selected on the basis of a specified hydric tolerance zone and shall be capable of surviving both wet and dry conditions. All plants used shall be well grown and healthy and free from disease and infestation by invasive species. Trees shall not be planted in bioretention basins.

6. Pretreatment

Install rip rap forebays, filter strips, level spreaders and other pretreatment devices per the details and at the locations specified in the plans. Rip rap used in pretreatment devices shall meet the requirements outlined in Georgia Department of Transportation Specification Sections 603 and 805 and woven filter fabric shall meet shall meet the requirements outlined in Georgia Department of Transportation Specification Section 881.2.05. Grasses used in filter strips shall be tolerant of both wet and dry conditions and meet the requirements outlined in Georgia Department of Transportation Specification Section 700.

7. Signage

Install signage per the details and locations specified in the plans.

B. Bioslopes

Complete bioslopes as shown in the construction Plans, or as modified by the Engineer, after final grade and stabilization of the area upstream of each bioslope is reached. If this is not feasible, stormwater flow shall be diverted around the bioslope and the bioslope protected with temporary erosion and sediment control measures. Contractor shall maintain the bioslope after construction as outlined in the GDOT Stormwater System Inspection and Maintenance Manual until the project is turned over.

1. Excavation

Excavation should be limited to the width and length of bioslope per the details shown in the plans or as directed by the Engineer. Avoid placing excavated material near the open trench so as not to jeopardize the stability of the trench sidewalls. The bottom of the excavated trench should be flat across its width and length, shall not be loaded in a way that causes soil compaction, and should be scarified prior to placement of specified materials. The sides of the trench shall be trimmed of all large roots. Sidewalls should be uniform with no voids and scarified prior to placement of materials for specified engineered drainage layers. Trench sidewalls shall be lined with the specified filter fabric.

2. Underdrain System/Aggregate Layer

Install underdrain system(s) made of perforated polyethylene or perforated PVC pipe at the locations and depth per details shown in the plans for conveyance of stormwater that has filtered through the media.

Perforations shall be 3/8-inch diameter and spaced 6-inches on center with four rows running longitudinally. The underdrain pipe shall be surrounded by an aggregate layer of size No. 57 aggregate. Nonwoven plastic filter fabric shall be used to protect the aggregate layer from the bioslope media mix. Aggregates used in underdrain systems shall be double washed and free of fines and organic materials. Cleanouts shall be provided at the end of each underdrain branch. Cleanouts shall extend to an elevation such that they are accessible once the trench is backfilled with the specified media and shall have a locking screw top lid to discourage vandalism and tampering.

3. Bioslope Media Mix

a) The bioslope media mix shall contain aggregate, dolomite, gypsum, and perlite and shall be mixed as follows:

Material	Quantity
Aggregate: GDOT size No. 89 stone No recycled material Non-limestone material mineral aggregate	3 yd^3 (3 yd^3 used as a baseline for other mixture components: adjust total quantity based on bioslope dimensions)
Perlite: Horticultural grade, free of toxic materials 99-100% passing US No. 4 Sieve 0-30% passing US No. 18 Sieve 0-10% passing US No. 30 Sieve	1 yd^3 per 3 yd^3 of mineral aggregate
Dolomite: calcium magnesium carbonate, $CaMg(CO_3)_2$ Agricultural grade, free of toxic materials 100% passing US No. 8 Sieve 0% passing US No. 16 Sieve	40 pounds per yd^3 of perlite
Gypsum: Non-calcined, agricultural gypsum $CaSO_4 \cdot 2H_2O$ (hydrated calcium sulfate) Agricultural grade, free of toxic materials 100% passing US No. 8 Sieve 0% passing US No. 16 Sieve	12 pounds per yd^3 of perlite

b) Install the bioslope media mix specified above for the 12-inch-minimum-thickness bioslope media mix layer and nonwoven filter fabric per the details shown in the plans. Protect the bioslope media mix from contamination by foreign matter during installation. If the bioslope media mix becomes contaminated or the filter fabric is damaged, remove contaminated or damaged materials and replace them at no additional cost to the Department.

c) Cover the bioslope media mix with turf reinforcement matting 1 (TRM 1). Or as directed by the Engineer.

4. Engineered Soil Application

1. The top 3 inches of the bioslope should consist of engineered soil. Do not use a mixture that contains deleterious substances. Obtain the materials from sources approved by the Engineer. Ensure that aggregate retained on No. 10 (2 mm) sieve is of hard, durable particles.

2. Stabilize the disturbed area adjacent to the bioslope per the plans immediately after the bioslope is installed. Permanent vegetation using grass cover shall be established within the bioslope surface area using sod.

5. Sod Layer

The sod layer must be grown in primarily sand/sandy-loam soils with less than 6% clay content. Sod shall be half cut or thin cut to promote infiltration. Sod shall consist of at least 75% of the designated grass species specified in the plans.

6. Pretreatment

Install filter strips per the details and locations specified in the plans. Grasses used in filter strips shall be tolerant of both wet and dry conditions and meet the requirements outlined in Georgia Department of Transportation Specification Section 700.

7. Signage

Install signage per the details and locations specified in the plans.

C. Dry Detention Basins

Construct dry detention basins per the Plans at the required locations, or as modified by the Engineer. Construct the basins complete as shown, including but not limited to: grading, drainage, accessories to complete the dry detention basins and temporary mulching and permanent grassing on external slopes. The contractor may propose alternate construction staging for review and approval. Alternate construction submittals for review shall be provided a minimum of 30 days prior to the construction of a dry detention basin. Contractor shall maintain the dry detention basin after construction as outlined in the GDOT Stormwater System Inspection and Maintenance Manual until the project is turned over.

1. Excavation

Excavation should be limited to the width and length of the dry detention basin per the details shown in the plans or as directed by the Engineer. Embankments shall be constructed using the materials and methods specified in Section 208 and shall be compacted to at least 95 percent of the maximum laboratory dry density. Stabilize the disturbed areas adjacent to dry detention basins per the plans immediately after each dry detention basin is installed.

2. Pretreatment

Install rip rap forebays per the details and at the locations specified in the plans. Rip rap used in forebays shall meet the requirements outlined in Georgia Department of Transportation Specification Sections 603 and 805 and woven filter fabric shall meet the requirements outlined in Georgia Department of Transportation Specification Section 881.2.05.

3. Signage

Install signage per the details and locations specified in the plans.

D. Enhanced Dry Swales

Construct enhanced dry swales as shown in the Plans, or as modified by the Engineer, after final grade and stabilization of the area upstream of each enhanced dry swale is reached. If this is not feasible, stormwater flow shall be diverted around the swale and the swale protected with temporary erosion and sediment control measures. Contractor shall maintain the enhanced dry swale after construction as outlined in the GDOT Stormwater System Inspection and Maintenance Manual until the project is turned over.

1. Excavation

Excavation should be limited to the width and length of the enhanced dry swale per the details shown in the plans or as directed by the Engineer. Avoid placing excavated material near the open trench so as not to jeopardize the stability of the trench sidewalls. The bottom of the excavated trench shall not be loaded in a way that causes soil compaction, and should be scarified prior to placement of specified materials. The sides of the trench shall be trimmed of all large roots. Sidewalls should be uniform with no voids and scarified prior to placement of materials for specified engineered drainage layers. Trench sidewalls shall be lined with the specified filter fabric. Infiltration testing should be performed prior to excavation of the dry enhanced swale if the enhanced dry swale is designed for infiltration. If infiltration is feasible, a second infiltration test is required prior to the placement of the underdrain system/aggregate layer to ensure that infiltration rates weren't impacted during excavation.

2. Underdrain System/Aggregate Layer

Install underdrain system(s) made of perforated polyethylene or perforated PVC pipe at the locations and depth per details shown in the plans for conveyance of stormwater that has filtered through the media. Perforations shall be 3/8-inch diameter and spaced 6-inches on center with four rows running longitudinally. A removable end cap connected to the underdrain system shall be installed per the details shown in the plans. If infiltration is feasible, the end cap shall be closed except for emergency drainage or maintenance purposes. The underdrain pipe shall be surrounded by an aggregate layer as defined in the details and a 2-3-inch filter blanket of size No. 89 aggregate (Georgia Department of Transportation Specification Section 800) shall be used to segregate the aggregate layer from the engineered soil mix. Aggregates used in underdrain systems shall be double washed and free of fines and organic materials. Cleanouts shall be provided at the end of each underdrain branch. Cleanouts shall extend to an elevation such that they are accessible once the trench is backfilled with the specified media and shall have a locking screw top lid, to discourage vandalism and tampering.

3. Engineered Soil Mix

Install the engineered soil mix specified above for the 30-inch thick engineered soil mix and nonwoven filter fabric per the details shown in the plans. The engineered soil mix shall be placed in a maximum of 12-inch lifts and shall be protected from contamination by foreign matter during installation. If the engineered soil mix becomes contaminated or the filter fabric is damaged, remove contaminated or damaged materials and replace them at no additional cost to the Department. Avoid using heavy equipment on the basin area during installation to maintain hydraulic conductivity of the engineered soil mix and to prevent damage to the underdrains.

4. Sod Layer

The sod layer must be grown in primarily sand/sandy-loam soils with a clay content of 10% or less. Sod shall be half cut or thin cut to promote infiltration. Sod shall consist of at least 75% of the designated grass species specified in the plans.

5. Pretreatment

Install rip rap forebays per the details and at the locations specified in the plans. Rip rap used in forebays shall meet the requirements outlined in Georgia Department of Transportation Specification Sections 603 and 805 and woven filter fabric shall meet the requirements outlined in Georgia Department of Transportation Specification Section 881.2.05. Rip rap forebays shall be located at major inflow locations and energy dissipation shall be provided at all concentrated inflow locations. Maintenance access shall be provided to the forebay.

6. Signage

Install signage per the details and locations specified in the plans.

E. Enhanced Wet Swales

Construct enhanced wet swales as shown in the Plans, or as modified by the Engineer, after final grade and stabilization of the area upstream of each enhanced wet swale is reached. If this is not feasible, stormwater flow shall be diverted around the swale and the swale protected with temporary erosion and sediment control measures. Contractor shall maintain the enhanced wet swale after construction as outlined in the GDOT Stormwater System Inspection and Maintenance Manual until the project is turned over.

1. Excavation

Excavation should be limited to the width and length of enhanced wet swale per the details shown in the plans or as directed by the Engineer. Avoid placing excavated material near the open trench so as not to jeopardize the stability of the trench sidewalls. The bottom of the excavated trench shall not be loaded in a way that causes soil compaction, and should be scarified. The sides of the trench shall be trimmed of all large roots, uniform with no voids, and scarified during normal stage construction. Install matted permanent grass slopes adjacent to enhanced wet swales immediately after each enhanced wet swale is installed. Once the basin has been stabilized, vegetation shall be established within the enhanced wet swale per the details shown in the plans.

2. Plantings

Plant species used in enhanced wet swale shall be installed per the details shown in the plans and meet the requirements outlined in Georgia Department of Transportation Specification Section 702. Plants shall be

selected on the basis of a specified hydric tolerance zone and shall be capable of surviving wetland conditions. All plants used shall be well grown and healthy and free from disease and infestation by invasive species.

3. Pretreatment

Install rip rap forebays per the details and at the locations specified in the plans. Rip rap used in forebays shall meet the requirements outlined in Georgia Department of Transportation Specification Sections 603 and 805 and woven filter fabric shall meet the requirements outlined in Georgia Department of Transportation Specification Section 881.2.05.

4. Signage

Install signage per the details and locations specified in the plans.

F. Infiltration Trenches

Construct infiltration trenches as shown in the Plans, or as modified by the Engineer, only after final grade and stabilization of drainage areas upstream of the infiltration trenches are completed to prevent contamination. If this is not feasible, stormwater flow shall be diverted around the trench and the trench area protected with temporary erosion and sediment control measures. Contractor shall maintain the infiltration trench after construction as outlined in the GDOT Stormwater System Inspection and Maintenance Manual until the project is turned over.

1. Excavation

Excavation should be limited to the width and length of infiltration trench per the details shown in the plans or as directed by the Engineer. Avoid placing excavated material near the open trench so as not to jeopardize the stability of the trench sidewalls. The bottom of the excavated trench should be flat across its width and length, shall not be loaded in a way that causes soil compaction, and should be scarified prior to placement of specified materials. The sides of the trench shall be trimmed of all large roots. The sidewalls should be uniform with no voids and scarified prior to placement of materials for specified engineered drainage layers. Trench sidewalls shall be lined with specified filter fabric. Infiltration testing is required before excavation and prior to placement of the drainage layer to ensure that infiltration rates were not impacted during excavation and that the in-situ soils have a minimum infiltration rate of 0.7 in/hr (5.0×10^{-4} cm/s)

2. Observation Wells

Install observation wells made of 2-inch diameter, 0.01-inch-slotted, threaded, schedule 40 PVC pipe at the locations and depth per details shown in the plans for percolation monitoring. Observation wells shall have a threaded or slip-on top cap and shall have a locking steel sleeve to discourage vandalism and tampering.

3. Drainage Layer

Install the specified materials for drainage layers and filter fabric per the details shown in the plans. The bottom 6 inches of the drainage layer shall consist of size 10 NS sand (Georgia Department of Transportation Specification Section 801). The drainage layer shall consist of size No. 3 drainage aggregate to the depth specified in the plans and filter fabric shall be used to segregate the aggregate layer from the sod layer. All aggregates used in drainage layers shall be double washed and free of fines and organic materials. Protect drainage layers from contamination by foreign matter during installation. If drainage layers become contaminated or filter fabric is damaged, remove contaminated or damaged materials and replace them at no additional cost to the Department.

4. Sod Layer

The top layer of the trenches shall consist of sod as specified in the plans. Sod must be washed or grown in primarily sand/sandy-loam soils with 10% or less clay content. Stabilize the disturbed areas adjacent to infiltration trenches per the plans immediately after each infiltration trench is installed.

5. Pretreatment

Install rip rap forebays, filter strips, level spreaders and other pretreatment devices per the details and at the locations specified in the plans. Rip rap used in pretreatment devices shall meet the requirements outlined in Georgia Department of Transportation Specification Sections 603 and 805 and woven filter fabric shall meet the requirements outlined in Georgia Department of Transportation Specification Section 881.2.05.

Grasses used in filter strips shall be tolerant of both wet and dry conditions and meet the requirements outlined in Georgia Department of Transportation Specification Section 700.

6. Signage

Install signage per the details and locations specified in the plans.

G. Sand Filters

Construct sand filters as shown in the Plans or as modified by the Engineer, after final grade and stabilization of the area upstream of each sand filter is reached/ If this is not feasible, stormwater flow shall be diverted around the sand filter and the area shall be protected with temporary erosion and sediment control measures. Contractor shall maintain the sand filter after construction as outlined in the GDOT Stormwater System Inspection and Maintenance Manual until the project is turned over.

1. Excavation

Excavation should be limited to the width and length of the sand filter per the details shown in the plans or as directed by the Engineer. Avoid placing excavated material near the open trench so as not to jeopardize the stability of the trench sidewalls. The bottom of the excavated trench should be flat across its width and length, shall not be loaded in a way that causes soil compaction, and should be scarified prior to placement of specified materials. The sides of the trench shall be trimmed of all large roots. The sidewalls should be uniform with no voids and scarified prior to placement of materials for specified engineered drainage layers. Trench sidewalls shall be lined with the specified filter fabric.

2. Underdrain System/Aggregate Layer

Install underdrain system(s) made of perforated polyethylene or perforated PVC pipe at the locations and depth per details shown in the plans for conveyance of stormwater that has filtered through the media. Perforations are shall be 3/8-inch diameter and spaced 6-inches on center with four rows running longitudinally. The underdrain pipe shall be surrounded by an aggregate layer as defined in the details. Nonwoven filter fabric shall be used to segregate the aggregate layer from the sand filter bed. Aggregates used in underdrain systems shall be double washed and free of fines and organic materials. Cleanouts shall be provided at the end of each underdrain branch. Cleanouts shall extend to an elevation such that they are accessible once the trench is backfilled with the specified media and shall have a locking and threaded top lid to discourage vandalism and tampering.

3. Sand Filter Bed

Install the sand filter bed consisting of size 10 NS sand (Georgia Department of Transportation Specification Section 801) for the 18-inch-minimum-thickness sand filter bed layer and nonwoven filter fabric per the details shown in Plans. The sand filter bed shall be placed in 6-inch lifts and shall be protected from contamination by foreign matter during installation. If the sand filter bed becomes contaminated or the filter fabric is damaged, remove contaminated or damaged materials and replace them at no additional cost to the Department. Avoid using heavy equipment on the filter bed to maintain hydraulic conductivity of the soil media and avoid damaging the underdrains.

4. Engineered Soil Requirements

1. The top 3 inches of the sand filter should consist of engineered soil. Do not use a mixture that contains deleterious substances. Obtain the materials from sources approved by the Engineer. Ensure that aggregate retained on No. 10 (2 mm) sieve is of hard, durable particles.
2. Nonwoven filter fabric shall be installed between the engineered soil and sand filter bed and shall be readily separable for maintenance. Stabilize the disturbed area adjacent to the sand filter per the plans immediately after the sand filter is installed. Permanent vegetation using grass cover shall be established within the sand filter using seeding once the basin has been stabilized. Grass used within the sand filter should be capable of withstanding frequent periods of wet and dry conditions.

5. Pretreatment-Sediment Chamber

Rip rap used in sediment chambers shall meet the requirements outlined in Georgia Department of Transportation Specification Sections 603 and 805 and woven filter fabric shall meet the requirements outlined in Georgia Department of Transportation Specification Section 881.2.05.

6. Signage

Install signage per the details and locations specified in the plans.

H. Wet Detention Ponds

Construct wet detention ponds per the Plans at the required locations or as modified by the Engineer. Construct the ponds complete as shown, including but not limited to: grading, drainage, accessories to complete the wet detention ponds and temporary mulching and permanent grassing on external slopes. The contractor may propose alternate construction staging for review and approval. Alternate construction submittals for review shall be provided a minimum of 30 days prior to construction of a wet detention pond. Contractor shall maintain the wet detention pond after construction as outlined in the GDOT Stormwater System Inspection and Maintenance Manual until the project is turned over.

1. Excavation

Excavation should be limited to the width and length of the wet detention pond per the details shown in the plans or as directed by the Engineer. Embankments shall be constructed using the materials and methods specified in Georgia Department of Transportation Specification Section 208 and shall be compacted to at least 95 percent of the maximum laboratory dry density. Infiltration testing shall be performed prior to excavation of the wet detention pond to determine if a permanent pool will be maintained. If infiltration test results show an infiltration rate greater than 1 inch/hour at the proposed wet detention pond invert, an impervious liner shall be approved by the Engineer for use. Install matted permanent grass slopes adjacent to wet detention ponds immediately after each wet detention pond is installed. Once the basin has been stabilized, vegetation shall be established within the wet detention pond per the details shown in the plans.

2. Liners

1. If geotechnical testing confirms the need for a liner, acceptable options include one of the following and shall be approved by the Engineer for use: (a) six to 12 inches of clay soil that meets the specifications below, (b) a 30 mm poly-liner, (c) bentonite, (d) use of chemical additives, or (e) a design prepared by a professional engineer registered in the state of Georgia.

Clay Liner Specifications			
Property	**Test Method**	**Unit**	**Specification**
Permeability	ASTM D-2434	cm/sec	$1 X 10^{-6}$
Plasticity Index of Clay	ASTM D-423/424	%	Not less than 15
Liquid Limit of Clay	ASTM D-2216	%	Not less than 30
Clay Particles Passing	ASTM D-422	%	Not less than 30
Clay Compaction	ASTM D-2216	%	95% of standard proctor density

2. For wet detention ponds designed to have a clay liner, 4" of soil shall be added to the top of the clay liner. The soil may be amended organic material in order to support plant growth depending on the soil analysis. If a geosynthetic liner is used to reduce exfiltration from the wet detention pond, a minimum of 1 foot of soil shall separate the geosynthetic liner from the planting surface.

3. Plantings

Plant species used in wet detention ponds shall be installed per the details shown in the plans and meet the requirements outlined in Georgia Department of Transportation Specification Section 702. Vegetation surrounding the normal pool and along the safety bench shall be water tolerant wetland species and the remaining areas shall be planted with turf grass to prevent erosion. Woody vegetation shall not be planted on the embankment or 25 feet from the outlet structure. Plants shall be selected based on a specified hydric tolerance zone and all plants used shall be well grown and healthy and free from disease and infestation by invasive species.

3. Pretreatment

Install rip rap forebays per the details and at the locations specified in the plans. Rip rap used in forebays shall meet the requirements outlined in Georgia Department of Transportation Specification Sections 603and 805 and woven filter fabric shall meet the requirements outlined in Georgia Department of Transportation Specification Section 881.2.05.

4. Signage

Install signage per the details and locations specified in the plans.

169.3.06 Quality Acceptance

General Provisions 101 through 150.

169.3.07 Contractor Warranty and Maintenance

General Provisions 101 through 150.

169.4 Measurement

A. Bioretention Basins

Bioretention basins are measured for payment by the entire basin constructed at each location complete in place and accepted. The outlet control structure, underdrain system, engineered soil mix, mulch, any pretreatment (e.g. forebay), any landscape plants, any signage, any outlet pipe, and any outlet apron and/or other energy dissipation devices are included in the cost of the bioretention basin. Permanent grassing is incidental.

B. Bioslopes

Permanent bioslopes are measured for payment by the entire bioslope complete in place and accepted. The outlet control structure, underdrain system, any outlet pipe, any pretreatment, any signage, and any outlet apron and/or other energy dissipation devices are included in the cost of the bioslope. Permanent grassing is incidental.

C. Dry Detention Basins

Dry detention basins are measured for payment by the entire structure constructed at each location complete in place and accepted. The outlet control structure, any outlet pipe, any pretreatment (e.g. forebay), any signage, and any outlet apron and/or other energy dissipation devices are included in the cost of the dry detention basin. Permanent grassing is incidental.

D. Enhanced Dry Swales

Enhanced dry swales are measured for payment by the entire structure constructed at each location complete in place and accepted. The outlet control structure, underdrain system, engineered soil mix, any pretreatment (e.g. forebay), any signage, any outlet pipe, and any outlet apron and/or other energy dissipation devices are included in the cost of the enhanced dry swale. Permanent grassing is incidental.

E. Enhanced Wet Swales

Enhanced wet swales are measured for payment by the entire structure constructed at each location complete in place and accepted. The outlet control structure, any outlet protection, any pretreatment (e.g. forebay), any landscape plants, any signage, and any outlet apron and/or other energy dissipation devices are included in the cost of the enhanced wet swale. Permanent grassing is incidental.

F. Infiltration Trenches

Infiltration trenches are measured for payment by the entire structure constructed at each location complete in place and accepted. Any pretreatment and any signage are included in the cost of the infiltration trench. Sod is incidental.

G. Sand filters

Sand filters are measured for payment by the entire structure constructed at each location complete in place and accepted. The outlet control structure, underdrain system, sand filter bed, sedimentation chamber, any signage, any outlet pipe, and any outlet apron/or other energy dissipation devices are included in the cost of the sand filter. Permanent grassing is incidental.

H. Wet Detention Ponds

Wet detention ponds are measured for payment by the entire structure constructed at each location complete in place and accepted. The outlet control structure, any outlet pipe, any pretreatment (e.g. forebay), landscape plants, any signage, and any outlet apron and/or other energy dissipation devices are included in the cost of the wet detention pond. Permanent grassing is incidental.

169.4.01 Limits

General Provisions 101 through 150.

169.5 Payment

A. Bioretention Basins

Bioretention basins are paid for at the Contract Unit Price per each. The outlet control structure, any outlet pipe, any pretreatment (e.g. forebay), any landscape plants, any signage, and any outlet apron and/or other energy dissipation devices are paid for in the overall cost of the bioretention basin. Payment is full compensation for:

- Furnishing the material and labor
- Preparation and grading required to construct bioretention basins
- Installation of the drainage aggregate, nonwoven plastic filter fabric, and complete underdrain system as shown in the details for construction of bioretention basins
- Installation of the permeable engineered soil mix, and mulch, as shown in the details for construction of bioretention basins
- Installation of landscape plantings as shown in the plans for construction of bioretention basins
- Any other incidentals such as but not limited to pipe fittings and connections to other specified structures required to construct bioretention basins

B. Bioslopes

Bioslope drains are paid for at the Contract Unit Price per each. The outlet control structure, any outlet pipe, any pretreatment, any signage, and any outlet apron and/or other energy dissipation devices are paid for in the overall cost of the bioslope. Payment is full compensation for:

- Furnishing the material and labor
- Preparation and grading required to construct bioslopes
- Installation of the drainage aggregate, collector pipes, bioslope soil media, nonwoven filter fabric, and turf reinforcement matting 1, as shown in the details for construction of bioslope drains
- Any incidentals such as but not limited to pipe fittings and connections required to construct the bioslope

C. Dry Detention Basins

Dry detention basins are paid for at the Contract Unit Price per each. The outlet control structure, any outlet pipe, any pretreatment (e.g. forebay), any signage, and any outlet apron and/or other energy dissipation devices are paid for in the overall cost of the dry detention basin. Payment is full compensation for:

- Furnishing the material and labor
- Preparation and grading required to construct dry detention basins
- Any other incidentals such as but not limited to pipe fittings and connections to other specified structures required to construct dry detention basins

D. Enhanced Dry Swales

Enhanced dry swales are paid for at the Contract Unit Price per each. The outlet control structure, any outlet pipe, any pretreatment (e.g. forebay), any signage, and any outlet apron and/or other energy dissipation devices are paid for in the overall cost of the enhanced dry swale. Payment is full compensation for:

- Furnishing the material and labor
- Preparation and grading required to construct enhanced dry swales
- Installation of the drainage aggregate, nonwoven filter fabric, and complete underdrain system as shown in the details for construction of enhanced dry swales
- Installation of the permeable engineered soil mix, and sod if required, as shown in the details for construction of enhanced dry swales

- Any other incidentals such as but not limited to pipe fittings and connections to other specified structures required to construct enhanced dry swales

E. Enhanced Wet Swales

Enhanced wet swales are paid for at the Contract Unit Price per each. The outlet control structure, any outlet pipe, any pretreatment (e.g. forebay), any landscape plants, any signage, and any outlet apron and/or other energy dissipation devices are paid for in the overall cost of the enhanced wet swale. Payment is full compensation for:

- Furnishing the material and labor
- Preparation and grading required to construct enhanced wet swales
- Installation of landscape plantings as shown in the plans for construction of enhanced wet swales
- Any other incidentals such as but not limited to pipe fittings and connections to other specified structures required to construct wet swales

F. Infiltration Trenches

Infiltration trenches are paid for at the Contract Unit Price per each. Any pretreatment and any signage are paid for in the overall cost of the infiltration trench. Payment is full compensation for:

- Furnishing the material and labor
- Preparation and grading required to construct infiltration trenches
- Installation of the drainage aggregate, nonwoven filter fabric, and observation wells as shown in the details for construction of infiltration trenches
- Installation of the sod as shown in the details for construction of infiltration trenches
- Any other incidentals such as but not limited to pipe fittings and connections to other specified structures required to construct infiltration trenches

G. Sand Filters

Sand filters are paid for at the Contract Unit Price per each. The outlet control structure, the sedimentation chamber, any outlet pipe, any signage, and any outlet apron and/or other energy dissipation devices are paid for in the overall cost of the sand filter. Payment is full compensation for:

- Furnishing the material and labor
- Preparation and grading required to construct sand filters
- Installation of the drainage aggregate, nonwoven filter fabric, 10 NS sand, and complete underdrain system as shown in the details for construction of sand filters
- Installation of the permeable soil as shown in the details for construction of sand filters
- Any other incidentals such as but not limited to pipe fittings and connections to other specified structures required to construct sand filters.

H. Wet Detention Ponds

Wet detention ponds are paid for at the Contract Unit Price per each. The outlet control structure, any outlet pipe, any pretreatment (e.g. forebay), any landscape plants, any signage, and any outlet apron and/or other energy dissipation devices are paid for in the overall cost of the wet detention pond. Payment is full compensation for:

- Furnishing the material and labor
- Preparation and grading required to construct wet detention ponds
- Installation of landscape plantings as shown in the plans for construction of wet detention ponds

Any other incidentals such as but not limited to pipe fittings and connections to other specified structures required to construct wet detention ponds

Payment is made under:

Item No. 169	Construct bioretention basin	Per each

Item No. 169	Construct bioslope	Per each
Item No. 169	Construct dry detention basin	Per each
Item No. 169	Construct enhanced dry swale	Per each
Item No. 169	Construct enhanced wet swale	Per each
Item No. 169	Construct infiltration trench	Per each
Item No. 169	Construction sand filter	Per each
Item No. 169	Construct wet detention pond	Per each

169.5.01 Adjustments

General Provisions 101 through 150.

169.6 As-Built Documents

169.6.01 Description

Arrange for the inspection of post-construction stormwater BMPs during construction activities as specified and submit post-construction stormwater BMP as-built documents to the Department within 45 calendar days prior to substantial completion of the Contract.

169.6.02 Construction

Submit to the Department within 45 calendar days of completing construction of all post-construction stormwater BMPs in the Contract post-construction stormwater BMP as-built documents that contain the specified information for each post-construction stormwater BMP constructed. Submit two hard copies and one digital copy in PDF format. All post-construction stormwater BMPs shall meet the construction tolerances outlined in Georgia Department of Transportation specification 169.6.03 and will require approval from construction engineering and inspection personnel.

The post-construction stormwater BMP as-built documents shall be prepared by a professional engineer or registered land surveyor.

The post-construction stormwater BMP as-built documents include the following content, neatly presented and organized in an easy-to-follow format, for each post-construction stormwater BMP in the Contract.

A. Red line revision data must be overlaid on the appropriate Contract Plan sheet(s). Red line revision data must be red in color, clearly legible, and easily distinguishable. Printed copies must be submitted on 11 in. X 17 in. sheets.

B. Applicable supporting computations demonstrating that the functionality of the post-construction stormwater BMP meets the approved design requirements as noted in the approved Post-Construction Stormwater Management (PCS) Report for the Contract. Include any necessary revisions to the final PCS Report.

Upon, written request, the Department will provide CADD files in DGN format for the approved plans and a copy of the PCS Report in PDF format to facilitate completion of the post-construction stormwater BMP as-built documents.

169.6.03 Construction Tolerances

Construction tolerances for post-construction stormwater BMPs shall be as follows.

A. Depths: Depths shall be within 5% of the depths specified in the Contract Documents.

B. Water Quality and Channel Protection Volumes:

– Measurement of Water Quality volume and Channel Protection volume shall be within 5% of the volumes specified in the Contract Documents.

– Outlet structure orifices and weirs shall be within 3/16 inch of the Contract Documents.

C. Dimensions:

- Length of bioslopes, enhanced dry/wet swales, grass channels, infiltration trenches, and filter strips shall be within 5% of the length specified in the Contract Documents not to exceed 10 feet.
- Width of infiltration trenches and filter strips shall be within 5% of the width specified in the Contract Documents.
- Surface area for bioretention basins and sand filters shall be within 5% of the surface area specified in the Contract Documents.
- In lieu of measuring length and width and depth of a post construction structure the average end area method for calculating volume can be used to calculate of post construction structures that have an irregular shape. The accepted tolerance of the difference between the volume measured and the volume derived from the contract documents shall be 10%.

169.6.04 Payment

Post-construction stormwater BMP as-built documents will be paid for at the contract unit price per each. The payment will be full compensation for services of the professional engineer or registered surveyor, and for all material, labor, equipment, tools, and incidentals necessary to complete the work.

Subsequent inspections and reconstructed post-construction stormwater BMPs because of failure to address deviations from the Contract Documents that exceed specified tolerances and do not meet the design functions as presented in the approved final PCS Report shall be at no additional cost to the Department.

Subsequent revisions to and submissions of the post-construction stormwater BMP as-built documents following the initial submission shall be at no additional cost to the Department.

Georgia Department of Transportation

Technical Provisions

For

Design-Build Agreement

P.I. No. 0010212

Attachment 13-1

SP 443 Elastomeric Profile Bridge Joint Seals

SP 447 Modular Expansion Joints

SP 449 Silicone Seal

SP 449 Bridge Deck Joint Seals

SP 500 HPC

SP 500 Light Weight Concrete

SP 500 Class D

SP 500 UHPC

SP 500 Mass Concrete

SP 511 Mechanical Bar Splice

SP 581 Disc Bearings

SP 627 LRFD MSE Walls

SP 628 Permanent Soil Nailed Walls

SP 865 Manufacture of Prestressed Concrete Members

SP 999 Precast Deck Panels

Date: May 15, 2013

DEPARTMENT OF TRANSPORTATION
STATE OF GEORGIA

SPECIAL PROVISION

Project No:
P.I. No. 0010212

SECTION 443 - ELASTOMERIC PROFILE BRIDGE JOINT SEALS

443.1 General Description

This work consists of furnishing and installing a bridge deck joint seal device to the limits shown on the plans that consists of a monolithic steel strip seal retainer, a polychloroprene gland, and a lubricant adhesive. Only a continuous full length strip seal joint system is acceptable, unless stage construction or excessive length prohibits monolithic installation. Utilize a prequalified expansion device manufacturer with a five year proven history of successful product manufacture.

Provide an expansion joint device designed for HS-20 truck loading and impact in accordance with 2002 AASHTO specifications.

443.1.01 Definitions

A. Strip Seal Expansion Joint Device

This device is constructed of steel elements designed with a locking mechanism capable of securely locking the edges of a continuous non-reinforced polychloroprene gland. The steel elements are anchored to the structure in accordance with the specification. All materials are as specified in the contract documents or as recommended by the manufacturer of the strip seal joint assembly. The strip seal joint assembly is referred to throughout the specifications as the expansion joint device.

B. Joint

Provide joint opening between two portions of a structure to allow for expansion and contraction.

443.1.02 Related Referernces

General Provisions 101 through 150.

443.1.02 Submittals

Submit for review by the Engineer, complete shop drawings and product data for the expansion device. Submit seven (7) complete sets of information. At the discretion of the Engineer, furnish facilities for inspection of the completed device or a representative sample in the manufacturer's plant. Allow the inspector free access to the necessary parts of the manufacturer's plant. Accurately set and securely support at the correct grade and elevation and the correct joint opening based on temperature as shown on the plans and on the approved shop drawings.

443.2 Materials

Furnish a manufacturer's certification that the materials proposed for use on the project have been pretested and meet the requirements as set forth in the specification and as detailed in the corresponding contract drawings. Do not install materials in the field prior to the Engineer's approval. The strip seal expansion joint device, including anchorages, is to be supplied by the manufacturer. The following requirements for each component are to be verified by the manufacturer:

A. Steel Elements

Provide ASTM A-588 weathering grade steel for the material utilized to produce a shape suitable to mechanically lock the sealing element in place throughout the normal movement cycle of the joint. Provide a minimum thickness of ¼ in. as measured from the internal locking mechanism cavity to the top surface of the steel retainer. Provide minimum dimensions of 2-1/4 in. width and 3 in. height.

Provide steel strip seal retainers that are a monolithic steel shape with a machined seal retainer cavity. Multiple component welded steel shapes and rolled steel, that is bent or crimped to achieve final shape and/or seal retainer cavity, is not permitted. Perform all welding in accordance to the Georgia Standard Specifications and paragraph D-1.5 of the AWS welding code. Provide full penetration groove welds for splices between sections of steel strip seal retainers.

B. Continuous Polychloroprene Gland

Supply and install the polychloroprene gland in one continuous length. Provide a gland with a shape that promotes self-removal of foreign material during normal joint operation. Provide a gland with physical properties generally in accordance with the following:

PHYSICAL PROPERTY	ASTM TEST METHOD	REQUIREMENTS
Tensile strength, min, psi	D-412	2000
Elongation @ break, min, %	D-412	250%
Hardness, Type A durometer	D-2240 Modified	55 ± 5% points
Oven aging, 70h @ 212°F	D-573	
Tensile strength, max % loss		20% max
Elongation, max % loss		20% max
Hardness, Type A durometer, points change		0 to + 10
Oil Swell, ASTM Oil No. 3, 70h @ 212°F	D-471	
Weight change, max %		45%

Ozone resistance	D-1149 Modified	
20% strain, 300 pphm in air 70h @ 104°F		no cracks
Low temperature stiffening, 7 days @ 14°F		
Hardness, Type A durometer, points change		0 to + 15
Compression Set,		
70h @ 212°F max	D-395 Method B (modified)	40%

C. Lubricant Adhesive

Use a one part moisture curing polyurethane and hydrocarbon solvent mixture meeting the requirements of ASTM D-4070-81 for the material used in bonding the polychloroprene gland to the steel elements.

D. Anchorage

Provide an anchorage as detailed on the contract drawings with a minimum of 0.75 in^2 of bolt area per 1.0 linear foot of joint (Minimum ½ in. diameter hardware at 6 in. O.C. both sides of joint).

443.2.01 Delivery, Storage and Handling

General Provisions 101 through 150.

Store all materials to prevent damage from the elements and to ensure the preservation of its quality and fitness for the work. Avoid contact with flame.

Inspect all stored materials, although accepted before storage, prior to their use in the work. Ensure that all stored materials meet the requirements of the Contract at the time of use.

Remove from the site of the work immediately, any material rejected because of failure to meet the required tests or rejected because of damage. Replace all removed material at no additional cost to the Department.

443.3 Construction Requirements

443.3.01 Personnel

General Provision 101 through 150.

443.3.02 Equipment

General Provisions 101 through 150.

443.3.03 Preparation

General Provisions 101 through 150.

443.3.04 Fabrication

General Provisions 101 through 150.

443.3.05 Construction

Measure and record the surface temperature of the concrete and/or steel with a surface thermometer as described below. Record the temperature of the underside of the concrete slab at each end of the superstructure element adjacent to the expansion joint. Take the average of the readings to use with the temperature shown on the shop drawings.

Immediately prior to installation, inspect the joint system for proper alignment and complete bond between the neoprene sealer and the steel and proper stud placement and effectiveness. No bends or kinks in the joint system are allowed, except as necessary to follow the roadway grades. Any joint system exhibiting bends or kinks due to transporting or as a result of mishandling are to be removed from the work site, and replaced by a new joint system, at no additional expense to the Department. Where stage construction is required, connect all steel sections using full penetration groove welds.

Inspect studs visually and give each a light blow with a 4 lb. hammer to ensure full connection to steel. Repalce any stud which does not have a complete end weld, or does not emit a ringing sound when struck with a light blow by hammer. Carefully remove studs located more than 1 inch in any direction from the location shown on the shop drawings and provide a new stud placed on the proper location. Perform all stud replacements at no additional expense to the Department.

Blast clean all metal surfaces to come in contact with the neoprene sealer in accordance with the requirements of Steel Structures Painting Council Surface Preparation NO. 6 (SSPC-SP6)-Commercial Blast Cleaning. After cleaning, all cleaned surfaces are to exhibit a clean quality of C SA 2, or better, as defined by Steel Structures Painting Council Standard SSPC-VIS 1.

Protect cleaned metal surfaces until such time as the sealer and lubricant adhesive are placed against the metal surface. Reclean any metal surface upon which rusting appears in accordance with the foregoing, at no additional expense to the Department. Replace neoprene seals not fully bonded to the steel at no additional expense to the Department.

After installation and when the adjacent concrete is cured, water test the expansion joint device under the Engineer's direction and supervision. Seeping of water through the joint is cause for rejection of the expansion joint device.

443.4 Measurement

Measurement for the expansion device is per each device completely installed, which is the expansion joint device in place with the concrete placed and finished and the watertight integrity test performed as described above.

443.5 Payment

Payment for the expansion device as specified above is paid for at the Contract Unit price bid per each. Such payment is full compensation for furnishing all equipment and materials and performing the work in accordance with the Plans and Specifications.

Payment will be made under:

Item No. 443	Elastomeric Profile Bridge Joint Seals, Bridge No - __, Bent No - __	Per each

DEPARTMENT OF TRANSPORTATION
STATE OF GEORGIA

SPECIAL PROVISION

PROJECT NO.
P.I. NO. 0010212

Section 447—Modular Expansion Joints

Delete Section 447 and substitute the following:

Section 447—Modular Expansion Joints

447.1 General Description

This work includes fabricating, furnishing, and installing a modular expansion joint device at the locations shown on the plans and in accordance with these specifications. Seal the deck surface and side barriers to prevent water from seeping through the bridge deck. Any seeping of water through the joint will be cause for rejection of the expansion device.

Use a modular expansion joint device supplied by one of the following:

(a) Wabo Modular Expansion Joint System – as furnished by:

Watson Bowman Acme
95 Pineview Drive
Amherst, New York 14228 Tel. (716) 691-7566

(b) Steelflex Modular Expansion Joint System – as furnished by:

D.S. Brown Company
300 East Cherry Street
North Balitmore, Ohio 45872 Tel. (419) 257-3561

Only a continuous full length modular joint device supplied by one of the foregoing suppliers is acceptable. No other supplier will be considered. Only one type of modular joint device will be permitted to be installed at all locations. The installation of two different types at separate locations will not be permitted.

447.1.01 Definitions

The term modular expansion device includes the following items:

- Elastomeric joint seals
- Support bar
- Center beam

- Edge beam
- Sliding elastomeric bearings

447.1.02 Related References

A. Standard Specifications

Section 501—Steel Structures

Section 535—Painting Structures

Section 645—Repair of Galvanized Coatings

Section 851—Structural Steel

B. Referenced Documents

General Provisions 101 through 150.

447.1.03 Submittals

A. Shop Drawings

Submit shop drawings in accordance with Section 501 of the Specifications. Include the manufacturer's instructions for proper installation of the expansion joint device. Show details of the expansion device at the barrier. Furnish the facilities for testing and inspecting the completed device or have the manufacturer provide a representative sample expansion device in his plant or at an independent test facility. Allow inspectors free access to the necessary parts of the manufacturer's plant and test facility and cooperate with the Inspector.

447.2 Materials

Ensure that materials meet the following requirements:

MATERIAL	SPECIFICATION
Structural Steel (except center beams, edge beams and support bars)	ASTM A 709 Gr 36 (A 709 Gr 250)
Center Beams, Edge Beams and Support Bars	ASTM A 709 Gr 50 (A 709 Gr 345) or ASTM A 709 Gr 50W (A 709 Gr 345W)
Headed Studs	ASTM A 108
Premolded Seals, Lubricant, Adhesive, and Sliding Surfaces	As per manufacturer's current literature and recommendations
Stainless Steel Bearing Surfaces	ASTM A 167 or A 240M/A 240, Type 304

447.2.01 Delivery, Storage, and Handling

General Provisions 101 through 150.

447.3 Construction Requirements

447.3.01 Personnel

Ensure that the manufacturer provides an experienced representative familiar with the installation of the expansion device to be present at all times while the expansion device is being installed. Notify the expansion device manufacturer of the scheduled installation a minimum of two (2) weeks prior to the installation date.

447.3.02 Fabrication

A. Modular Unit

1. Use a device consisting of premolded elastomeric expansion joint strip seals mechanically held in place by steel center beams and edge beams. Box seals will not be permitted. Ensure that the components meet the following requirements:
   - Each transverse center beam is a one-piece monolithic shape individually supported by, and welded to, an independent support bar.
   - Edge beams that are a minimum of 4 ¾ inches (120 mm) in height and have a machined or extruded retainer shape.
   - Securely anchored into concrete.
   - Support bars supported by sliding elastomeric bearings.
   - Provide equal-distance control of the premolded elastomeric seals.
2. Paint or galvanize all structural steel not in contact with elastomers or embedded in concrete in accordance with Section 501. Either painting or galvanizing may be used, unless noted otherwise on the plans. Galvanize (do not paint) portions of structural steel in contact with elastomeric seals or embedded in concrete. Shop apply all paint coats.

B. Center Beams and Support Bars

Design center beams, support bars, and their connections to satisfy the applicable requirements of the current edition of AASHTO Standard Specifications for Highway Bridges. In addition, design center beams and support bars to satisfy the minimum criteria:

- The maximum spacing of the support bars connected to a center beam is 4.0 feet (1.22 m) along the center beam.
- The minimum area of the center beam is 4.9 square inches (645 mm^2).
- Minimum section modulus about the horizontal axis for the bottom fiber of a center beam is 5.9 cubic inches (96 684 mm^3).
- For the support bar, the minimum area (A) and minimum section modulus, about the horizontal axis for the top fiber (S), is as follows:

	Rated Movement (inches/millimeters)						
	0-6/150	0-9/230	0-12/305	0-15/380	0-18/460	0-21/535	0-21/610
A (in^2/mm^2)	5.1/3290	6.2/4010	7.0/4516	7.7/4968	8.5/5484	9.1/5871	9.7/6258
S (in^3/mm^3)	2.9/47 522	4.2/68 826	5.5/90 129	6.7/109 793	8.0/131 097	9.3/152 400	10.4/170 426

- Ensure that the center beams and support bars are sufficiently detailed in the shop drawings so that the above minimum section properties can be independently verified using the information contained in the shop drawings.

447.3.03 Construction

Install the modular expansion joint device in strict accordance with the manufacturer's written instructions, the advice of their representative, and these specifications. Ensure that the permanently installed expansion joint device matches the finished roadway profile and grade.

Immediately prior to installation, have the Engineer inspect the expansion joint device for proper alignment, and complete bond between the premolded elastomeric seals and the steel, and proper stud placement and constructability. Bond any

premolded elastomeric seals not fully bonded to the steel. Ensure that all bolted connections are checked and tightened if found to be loose.

Do not allow any bends or kinks in the expansion joint steel (except as necessary to follow the roadway grades). Straightening of bends or kinks will not be allowed. Remove any expansion joint device exhibiting bends or kinks from the work site, and replace it with a new expansion device.

Ensure that the manufacturer presets the expansion joint device prior to shipment. Preset the joint opening at 70° F (21° C) or as indicated on the plans. Remove any mechanical devices supplied to set the expansion joint to the proper width following final adjustment for temperature.

Inspect the concrete anchorages visually and give each one a light blow with a 4 lb (18 N) hammer. Replace any anchorage which does not have a complete weld or does not emit a ringing sound when struck with a light blow of the hammer.

Weld stainless steel sheet to the support member. Adhesive will not be allowed.

Anchor the expansion device as shown on the plans or as shown on the shop drawings approved by the Engineer. Where support bar boxes interfere with the edge beam anchorage method, weld the edge beam to the support bar boxes. For portions of the support bar boxes embedded in concrete, weld all plate connections perimeter in a manner that will prevent water or mortar from entering the box.

Accurately set and securely support the expansion device at the correct grade and elevation, and the correct joint opening as shown on the plans and on the shop drawings. If the maximum time between setting the joint opening and placing concrete exceeds four hours, check and adjust the opening as necessary.

Measure the structure temperature by recording the surface temperature of the concrete and/or steel with a surface thermometer as described below.

1. Concrete bridges: Record the temperature of the underside of the concrete slab a each end of the superstructure element adjacent to the expansion joint. Take the average of the readings to use with the temperature adjustment shown on the plans or on the approved shop drawings.
2. Steel bridges: Record the concrete slab temperature as described above. In addition, record the surface temperature of the shaded portion of the girder web at each location. Average the readings of the steel and concrete to use with the temperature adjustment.

Blast clean all non-galvanized metal surfaces that come in contact with the premolded elastomeric seal and lubricant adhesive in accordance with the requirements of Steel Structures Painting Council Surface Preparation Specification No. 6 (SSPC-SP6, Commercial Blast Cleaning).

Protect the cleaned metal surfaces from rusting until the premolded elastomeric seal and lubricant adhesive are placed against the metal surface. Reclean any previously cleaned metal on which rusting appears in a accordance with the foregoing.

In order to perform the work of installing the expansion joint device in a proper manner, some portions of the barrier and bridge deck cannot be constructed until after the expansion joint is installed. After the modular expansion joint device has been set to its final line and grade, fill recess openings in the deck and barrier with concrete (Class AA).

447.3.04 Quality Acceptance

A. Fatigue Testing

Perform fatigue testing by an independent testing laboratory on multiple spans of one or more full-size center beams. Test the same support and connections of the center beams and support bars as for the designed unit. Apply a simultaneous horizontal load, equal to a minimum of 20% of the vertical load. Perform the fatigue testing in accordance with the manufacturer's recommendations and approved procedures.

B. Watertight Integrity

After the expansion joint device has been permanently installed, test the full length of the device for watertight integrity. Use a method satisfactory to the Engineer.

Cover the entire joint system with water, either ponded or flowing, for a minimum duration of 15 minutes. Inspect the concrete surfaces under the joint during this 15 minute period and also for a minimum of 45 minutes after the supply of water has stopped, for any evidence of dripping water on any surface on the underside of the joint. Patches of moisture are not a cause for non-acceptance.

If the joint system exhibits evidence of water leakage at any place whatsoever, locate the leakage and take measures to correct the leakage as approved by the Engineer. Subsequent to corrective measures, perform the watertightness integrity test subject to the same conditions as the original test.

The words "permanently installed" as used above include completion of the portions of the barrier and deck that cannot be constructed until after the expansion device installed. This applies even though this work is to be paid for under other contract items.

C. Contractor Certification

Provide written certification to the Engineer that the expansion joint device was installed in accordance with the manufacturer's instructions, the advice of their representative, and these specifications. Also, provide in writing any certification from the joint manufacturer's representative

447.4 Measurement

Bridge expansion device will be measured as a unit, completely installed and accepted.

The words "completely installed" mean that the expansion joint device is in place with concrete placed and finished, and that the watertight integrity test has been successfully performed.

447.5 Payment

Each expansion joint device will be paid for at the Contract Price per each, complete in place. Payment will be full compensation for all work necessary to furnish, test, and install a modular expansion device, steel angles, concrete anchorages, placing and finishing concrete in block-outs.

Payment will be made under;

Item No. 447-1050 Modular Expansion Joint, Br No - , Bt No - …….. per each

DEPARTMENT OF TRANSPORTATION
STATE OF GEORGIA

SPECIAL PROVISION

PROJECT No:
P.I. NO. 0010212

SECTION 449 – Bridge Deck Joint Seals

Add the following Subsections to Section 449:

449.1 General Description

- A Preformed Pre-compressed, Silicone Coated, Self-Expanding Sealant System

449.2 Materials

J. Preformed Pre-compressed, Silicone Coated, Self-Expanding Sealant System

The preformed pre-compressed silicone joint seal shall as a minimum:

- Sealant system shall be comprised of three components: 1.) cellular polyurethane foam impregnated with hydrophobic 100% acrylic, water-based emulsion, factory coated with highway-grade, fuel resistant silicone; 2) field-applied epoxy adhesive primer, 3) field-injected silicone sealant bands.
- Be held in place by a non-sag, high modulus silicone adhesive.
- Be compatible with the epoxy and header material.
- Withstand the effects of vertical and lateral movements, skew movements and rotational movement without adhesive or cohesive failure.
- Designed so that, the material is capable of movement of +50%, -50% (100% total) of nominal material size.
- Changes in plane and direction shall be executed using factory fabricated 90 degree transition assemblies. The transitions shall be watertight at the inside and outside corners though the full movement of the product.
- The depth of the joint shall be recessed ½" below the riding surface throughout the normal limits of joint movement.
- Be resistant to ultraviolet rays
- Be resistant to abrasion, oxidation, oils, gasoline, salt, and other materials that may be spilled on or applied to the surface.
- Certify to the Engineer that the joint composition shall be free of any waxes or wax compounds; asphalts or asphalt compounds.

Ensure the joint meets the following physical properties:

Test	Requirements	Test Method
Tensile Strength of Silicone Coating (min)	140 psi	ASTM D 412
UV Resistance of Joint System	No Changes--2000 Hours	ASTM G155-00A
Density of Cellular Polyurethane Foam	200kg/m3 (12.5lb/ft3)	ASTM D545
Heat Aging Effects (Silicone Coating)	No cracking, chalking	ASTM C 792
Resilience (Silicone Coating)	≥ 95%	ASTM D 5329
Joint System Operating temp range (min)	-40° F to 185° F	ASTM C 711

The adhesive shall be a two-component, 100% solid, modified epoxy meeting the requirements of ASTM C881, Type I, Grade 3, Class B & C. The adhesive shall also have the following properties:

Tensile Strength	2,500 psi (24 MPa) min.
Compressive Strength	7000 psi (48 MPa) min.
Bond Strength (Dry Cure)	2000 psi (28MPa) min
Water Absorption	0.1% by weight

The silicone band adhesive shall have the following properties:

Test	**Requirements**	**Test Method**
Movement Capability	+100/-50%	ASTM C 719
Elongation at Break	>1400%	ASTM D 412
Slump	≤=0.3"	ASTM D 2202
Hardness (Shore A) max.	20	ASTM C 661
Tack free time (max)	60 minutes	ASTM C 679
Heat Aging Effects	No cracking, chalking	ASTM C 792
Resilience	≥ 95%	ASTM D5329
Bond	0% Adhesive or Cohesive Failure after 5 cycles @100% extension	ASTM D 5329

449.3.03 Preparation

A. Surface Preparation

2. **Preparation for Joint Seal**

   Delete: "Saw-cutting of the concrete deck may be necessary to provide an acceptable attachment surface for the joint seal".

449.3.05 Construction

H. Preformed Pre-compressed, Silicone Coated, Self-Expanding Sealant System

1. After the epoxy or elastomeric concrete had developed enough strength to be traffic ready, remove the temporary joint filler (when called for) and thoroughly clean the joint faces of all joint filler.
2. Lightly sandblast the joint to remove all residues. Prior to installation ensure surfaces are completely dry and all recommendations of the manufacture have been completed.
3. Clean the seal prior to installation by wiping it down with a cloth saturated with acetone.
4. Apply epoxy adhesive to substrate in a thin layer inside cleaned substrate.
5. Install the foam length into the wet epoxy adhesive so that the top of the bellows is ½" below the deck surface.
6. Inject a ¾-inch band of Silicone between the substrate and the foam.
7. Tool the excess Silicone and remove excess Silicone from bellows at the joins. Coat any exposed foam ends.

449.5 Payment

Payment will be made under:

Item No. 449	Preformed Pre-compressed, Silicone Coated, Self-Expanding Sealant System, Bridge No - ____, Bent No - ___	Per Linear Foot (meter)

Date: October 28, 2015

DEPARTMENT OF TRANSPORTATION
STATE OF GEORGIA

SPECIAL PROVISION

P.I. No: 0010212
Hall Counties

SECTION 449 – Bridge Deck Joint Seals

Add the following Subsections to Section 449:

449.1 General Description

- A preformed silicone joint seal, or

449.2 Materials

J. Performed Silicone Joint Seal

The preformed silicone joint seal shall as a minimum:

- Be held in place by a non-sag, high modulus silicone adhesive.
- Be compatible with epoxy and elastomeric concrete header material and steel headers (if required).
- Withstand the effects of vertical and lateral movements, skew movements and rotational movement without adhesive or cohesive failure.
- The depth of the joint shall be recessed below the riding surface throughout the normal limits of joint movement.
- Be resistant to ultraviolet rays
- Be resistant to abrasion, oxidation, oils, gasoline, salt, and other materials that may be spilled on or applied to the surface.

Ensure the joint meets the following physical properties:

Test	Requirements	Test Method
Hardness Type A durometer	53 ± 5	ASTM D 2240
Tensile Strength (min)	550 psi (3.8 Mpa)	ASTM D 412
Elongation at break (min)	350%	ASTM D 412
Tear Strength (min)	80 lb/in (92 kg/cm)	ASTM D 624
Compression set (max)	30% at 350o F	ASTM D 395
Operating temp range (min)	-60º F to 450º F (51º C to 232º C)	

The adhesive shall also have the following properties:

Test	Requirements	Test Method
Sag/flow (max)	3/16" (4.8 mm)	ASTM C 639
Hardness	23 ± 3	ASTM C 661
Tack free time (max)	30 minutes	ASTM C 679
Skin over time (tooling Time) (max)	5 minutes	AT 75º F/50% RH
Cure through to ¼" thickness (max)	16 hours	AT 75º F/50% RH
Resistance to UV	No Degradation	ASTM C 793
Peel Adhesion to substrates (min)	50 lb/in (58kg/cm)	ASTM C 794

449.3.03 Preparation

A. Surface Preparation

2. **Preparation for Joint Seal**

   Delete: "Saw-cutting of the concrete deck may be necessary to provide an acceptable attachment surface for the joint seal".

449.3.05 Construction

H. Preformed Silicone Joint Seal

1. After the epoxy or elastomeric concrete has developed enough strength to be traffic ready, remove the temporary joint filler (when called for) and thoroughly clean the joint faces of all joint filler.
2. Lightly sandblast the joint to remove all residues. Prior to installation, ensure surfaces are completely dry and all recommendations of the manufacture have been completed.
3. Clean the seal prior to installation by wiping it down with a cloth saturated with denatured alcohol.
4. Apply a 3/8" thick bead of adhesive along both sides of the joint at the depth recommended by the manufacturer.
5. Position the joint seal to the proper depth as recommended by the manufacturer.
6. Apply a bead of adhesive along the top side of the joint on each side as recommended by the manufacturer.
7. Tool the adhesive twice to insure complete contact with the vertical edge.

Revised: October 19, 2017
First Use Date: April 8, 2011

DEPARTMENT OF TRANSPORTATION
STATE OF GEORGIA

SPECIAL PROVISION

PROJECT NO.:

P.I. NO.: 0010212

Section 500—Concrete Structures

Add the following to 500.1.03.A:

The Contractor is responsible for all concrete mix designs. Submit a mix design for approval to the Office of Materials and Testing. Include the sources, actual quantity of each ingredient, design slump, design air and laboratory results that demonstrate the ability of the design to attain the required compressive strength at 28 days.

Prepare and test at least 8 cylinders according to ASTM C192 and AASHTO T22 to ensure that the demonstrated laboratory compressive strength at 28 days exceeds the minimum acceptance strength (X). Make the specimens from two or more separate batches with an equal number of cylinders made from each batch. The minimum acceptance strength is:

$$X = f'c + 500 \text{ psi} \; (X = f'c + 3.4 \text{ MPa})$$

Where, f'c is the required minimum compressive strength at 28 days for Class D concrete as shown in Table 1–Concrete Mix Table.

Add the following to Table 1—Concrete Mix Table:

Table 1—Concrete Mix Table

English								
Class of Concrete	(2) Coarse Aggregate Size No.	(1 & 6) Minimum Cement Factor lbs/yd^3	Max Water/ Cement Ratio lbs/lbs	(5) Slump Acceptance Limits (in) Lower - Upper		(3 & 7) Entrained Air Acceptance Limits (%) Lower - Upper		Minimum Compressive Strength at 28 days (psi)
Class D	57,67	650	0.445	2	4	3.5	7.0	4000
Metric								
Class of Concrete	(2) Coarse Aggregate Size No.	(1 & 6) Minimum Cement Factor kg/m^3	Max Water/ Cement Ratio kg/kg	(5) Slump Acceptance Limits (mm) Lower - Upper		(3 & 7) Entrained Air Acceptance Limits (%) Lower - Upper		Minimum Compressive Strength at 28 days (MPa)
Class D	57,67	386	0.445	50	100	3.5	7.0	28

Delete Subsection 500.3.04.F.1.b

Add the following to Subsection 500.3.04.F.1:

f. Class D—Bridge superstructure concrete or as called for on the Plans

August 10, 2015

Georgia Department of Transportation

State of Georgia

Special Provision

PROJECT NO.:

P.I. NO.: 0010212

Section 500—Concrete Structures

Delete Subsection 500.1 and substitute the following:

This work consists of manufacturing and using High Performance Portland cement concrete to construct precast-prestressed concrete bridge members as shown in the plans and using normal weight Portland cement concrete to construct structures as shown in the Plans.

Add the following to Subsection 500.1.02.A:

Section 831—Admixtures

Add the following to Subsection 500.1.02.B:

AASHTO T 277

Add the following to Subsection 500.1.03.A:

High Performance Concrete Mix Designs

The Fabricator is responsible for all concrete mix designs. Ensure that concrete mixes contain enough cement to produce workability within the water-cement ratio specified in Table 1A—High Performance Concrete Mix Table, below.

Submit a mix design for approval to the Office of Materials and Research. Include the sources and actual quantity of each ingredient and laboratory results that demonstrate the ability of the design to attain both the required compressive strength and chloride permeability at 56 days.

Include laboratory compressive strength test results of at least eight test cylinders prepared and cured according to AASHTO T 126. Ensure these test cylinders are made from two or more separate batches with an equal number of cylinders made from each batch.

Also include laboratory chloride permeability test results of at least two test specimens prepared and tested according to AASHTO T 277. Ensure these test specimens are made from two or more separate batches with an equal number of specimens made from each batch.

Table 1A—High Performance Concrete Mix Table

English									
Class of Concrete	Coarse Aggregate Size No.	(1) Minimum Cement Factor (lbs/yd^3)	Maximum Water/ Cement ratio (lbs/lbs)	(2) Slump Acceptance Limits (in) Lower-Upper		Entrained Air Acceptance Limits (%) Lower-Upper		(3) Minimum Compressive Strength at 56 days (psi)	Maximum Chloride Permeability at 56 days (Coulombs)
"AAA HPC"	67	650	.330	2	7	3.5	6.5	Beams – As shown on the Plans Piling – 5000	Beams – 3,000 Piling – 2,000
Metric									
Class of Concrete	Coarse Aggregate Size No.	(1) Minimum Cement Factor (kg/m^3)	Maximum Water/ Cement ratio (kg/kg)	(2) Slump acceptance Limits (mm) Lower-Upper		Entrained Air Acceptance Limits (%) Lower-Upper		(3) Minimum Compressive Strength at 56 days (MPa)	Maximum Chloride Permeability At 56 days (Coulombs)
"AAA HPC"	67	386	.330	50	180	3.5	6.5	Beams – As shown on the Plans Piling – 35	Beams – 3,000 Piling – 2,000

1. Determine the slump acceptance after the addition of high-range water reducer.
2. Determine the minimum compressive strength at 56 days using 4 in. diameter x 8 in. high (100 mm x 200 mm) cylinders.

Add the following to Subsection 500.2 Table 3:

Fly Ash	831.2.03.A.1
Silica Fume	831.2.03.A.4

Add the following note to Subsection 500.2 Table 3:

4. Use Type I or III Portland cement in High Performance concrete. Do not use air-entraining cement.

Add the following to Subsection 500.3.04.D.4:

f. For High Performance concrete, fly ash may be used as an additive at an addition rate not to exceed 15% of the cement by weight.

Add the following to Subsection 500.3.04.D:

6. Silica Fume

   Silica Fume may be used as an additive at an addition rate not to exceed 10% of the cement by weight.

June 19, 2012

Georgia Department of Transportation

State of Georgia

Special Provision

PROJECT NO.:

P.I. NO.: 0010212

Section 500—Concrete Structures

Add the following to Subsection 500.1:

This work consists of manufacturing and using Portland cement concrete with lightweight aggregate to construct structures as shown in the Plans.

Add the following to Subsection 500.1.02.B

ASTM C 567

AASHTO T 96

AASHTO T 104

AASHTO M 195

AASHTO T 196

GDT 32

Add the following to Subsection 500.3.01:

C. ACI Concrete Technician

Provide a GDOT certified ACI Concrete Technician, from an independent GDOT prequalified consultant firm, which is certified to perform Field Testing of Roadway Construction Materials.

Add the following to Subsection 500.3.04.F.1:

f. Lightweight Concrete—Concrete composed of a mixture of cementitious material, normal weight fine aggregate, lightweight coarse aggregate conforming to AASHTO M 195, water and admixtures. All structural lightweight concrete will have a maximum equilibrium density of 115 lbs/ft3 (1840 kg/m3) as determined by ASTM C 567.

g. Lightweight concrete will comply with the applicable requirements of Section 500 of the Standard Specifications. Use GDT 32 or AASHTO T 196 to determine air content of structural lightweight concrete.

Use lightweight coarse aggregate from an approved source or stockpile meeting the requirements of AASHTO M 195 and the Sulfate Soundness (AASHTO T 104) and Los Angeles Abrasion (AASHTO T 96) requirements of Section 800.2. Nominal sizes of lightweight coarse aggregates are as specified in AASHTO M 195 as 3/4, 1/2 or 3/8 in. (19.0, 12.5 or 9.5 mm).

The use of lightweight aggregate in concrete in a particular component of a structure will be shown on the Plans or called for in the specifications.

Add the following to Subsection 500.3.06:

F. Air Content Testing of Structural Lightweight Concrete

Provide testing of structural lightweight concrete per Subsection 500.3.04.F.1.g, and in accordance with test frequencies outlined in the Sampling, Testing and Inspection Quick Guide. Perform air content by a technician meeting the requirements of Subsection 500.3.01.C and who is approved by the Engineer. Submit test results to the Engineer. No separate measurement for payment will be made for testing of structural lightweight concrete.

MATERIALS AND RESEARCH

March 11, 2016

DEPARTMENT OF TRANSPORTATION
STATE OF GEORGIA
SPECIAL PROVISION

PROJECT NO.:

P.I. NO.: 0010212

Section 500—Concrete Structures

Add the following to Subsection 500.1.02:

B. Referenced Documents

"Guide to Mass Concrete", ACI 207.1R-05.

"Report on Thermal and Volume Change Effects on Cracking of Mass Concrete", ACI 207.2R-07.

"Cooling and Insulating Systems for Mass Concrete", ACI 207.4R-05.

"Standard Practice for Selecting Proportions for Normal, Heavyweight, and Mass Concrete", ACI 211.1-91

"Control of Cracking Concrete Structures", ACI 224R-01.

"Specification of Structural Concrete", Section 8, ACI 301-10.

"Compressive Strength of Cylindrical Concrete Specimens", AASHTO T 22-10

"Making and Curing Concrete Test Specimens in the Laboratory", ASTM C192

Add the following to Subsection 500.3.05:

AM. Mass Concrete

Mass concrete is defined as "Any large volume of concrete with dimensions large enough to require that measures be taken to cope with the generation of heat and attendant volume change to minimize cracking". Any concrete element with a least plan dimension greater than 5ft (or greater than 6 ft diameter for a drilled shaft) shall be designated as mass concrete and will use this specification. To account for variability in as-built dimension versus plan dimension, such as telescoping casing during construction, any concrete element with a least as-built dimension greater than 5 ½ ft (or great than 6 ½ ft diameter for a drilled shaft) shall be designated as mass concrete and use this specification. The introduction of a construction joint at a dimension less than 5 ft does not ensure that the maximum temperature attained by or the differential temperature in concrete is adequately controlled. Proposals for large volume concrete shall thus be evaluated based on the heat development and a Thermal Control Plan.

a. Temperature Specifications for Mass Concrete

Mass concrete shall conform to the concrete acceptance criteria and the following temperature requirements to prevent delayed ettringite formation (DEF) and thermally induced stress cracks:

1. The maximum allowable internal temperature of mass concrete meeting the requirements of Subsection 500.3.05.AM.b.1, shall not exceed 158 °F.

2. The maximum temperature differential between interior and exterior portions of the designated mass concrete element shall not exceed 35 °F.

3. The maximum temperature of the concrete when delivered and prior to placement shall be 85 °F.

b. Materials Selection and Mix Design Development

Materials used for mass concrete shall conform to the provisions in Section 500-Concrete Structures of GDOT *Standard Specifications-Construction of Transportation Systems* and the following requirements. When in conflict, materials shall conform to the special provisions below rather than those in Section 500.

1. Use Class F fly ash (no Class C fly ash is allowed), granulated iron blast-furnace slag or other pozzolans, if approved by the Department in all mass concrete. Slag may comprise no more than 75% by mass of total cementitious and pozzolanous materials. Class F fly ash may comprise no more than 40% by mass of total cementitious and pozzolanous materials. When a combination of multiple different pozzolans is used, the total amount may be no more than 75% by mass of total cementitious and pozzolanous materials.

2. High-early-strength (ASTM C150 Type III or ASTM C1157 HE) cement, metakaolin, silica fume calcium chloride and accelerating type admixtures shall not be used unless an adiabatic temperature study is completed showing temperature rise significantly less than that of plain unmodified concrete.

3. A retarding admixture, pretested with the job materials under job conditions, may be permitted to prevent cold joints due to the quantity of concrete placed, as approved by the Engineer.

4. Coarse aggregate larger than #5 stone maximum size aggregate is permitted to be used for mass concrete, if approved by the Engineer.

5. Other materials and/or mix designs may be proposed to the Engineer for approval, with documentation that the proposed mix designs meet temperature specifications from Subsection 500.3.05.AM.a for mass concrete.

6. Laboratory-designed mix proportions of materials are permitted for commonly used combinations of materials. Request these mixes in writing from the State Materials Engineer specifying the class of concrete and the source of ingredients.
7. Degree of Alkali-Silica Reactivity (ASR) of either fine or coarse aggregate is determined by testing the aggregates in ASTM C1260, or ASTM C1567 (either expansion shall be less than 0.10% after 14 days immersion). Unless the results of petrography indicate a significant change in the composition of materials in quarries, ASTM 1293 (expansion <0.04% at 1 year) is not required to be conducted, before a mix design can be approved by the Engineer. Alternatively obtain low ARS risk aggregate materials from certified suppliers.
8. The mixture will be capable of demonstrating a laboratory compressive strength at 28 days meeting the requirements of Table 1 – Concrete Mix Table, *Subsection 500.1.03.A*. Compressive strength will be determined based upon result of six cylinders prepared and tested in accordance with AASHTO T 22 and ASTM C192.

c. Thermal Control Plan

At least 30 calendar days prior to placing any concrete defined as mass concrete, the contractor shall submit to the Engineer for approval a Thermal Control Plan (TCP). The TCP shall show complete analysis of the anticipated thermal developments in the mass concrete elements for all expected project temperature ranges using the proposed mix design, casting procedures and materials. A primary focus of the TCP is actions to take when any of the temperature controls noted in Subsection 500.3.05.AM are exceeded or are anticipated to be exceeded. As a minimum, the TCP shall include details about the following:

1. Concrete mix design showing composition, proportions, and sources for all components.
2. Proposed methods to control concrete temperature at time of placement, such as pre-cooling of raw materials or concrete.
3. Duration and method of curing.
4. Calculations of maximum concrete temperatures for the range of expected air, water (for underwater construction) and concrete temperatures.
5. Proposed methods to control maximum temperature during curing. A mechanical cooling system may be used to control the internal temperature of mass concrete during curing but shall be designed in conformance with the Thermal Control Plan. If a mechanical cooling system is used, the plans for the cooling system operation and final grouting after cooling shall be submitted to the Engineer for approval.
6. When the maximum concrete temperature nears 140 °F, notify the Engineer and take corrective measures immediately to retard further increase in the temperature to limit it to the 158 °F maximum. Utilize the mechanical cooling system, if installed, to lower the overall temperature. Other active measures may include, but not limited to

for any further pours: chilled water for mixing, precooling aggregate stockpiles, ice for mixing water, nitrogen gas, and shade for aggregate stockpiles. Cease placement of concrete until the maximum temperature has been lowered.

7. Proposed methods to control temperature differentials during curing that could include insulation for the forms and exposed portions of concrete. Contractor must take actions that prevent the exterior surfaces of the concrete from getting too cool, too quickly such as using insulation or heater or by preventing the core from getting too hot.

8. When the internal concrete temperature differential between interior and exterior concrete nears 30°F, notify the Engineer and take corrective measures immediately to retard further increase in the temperature differential to limit it to the 35°F maximum. Utilize the mechanical cooling system, if being use, to lower the internal temperature. Other active measures may include, but not limited to: chilled water for mixing, precooling aggregate stockpiles, ice for mixing water, nitrogen gas, and shade for aggregate stockpiles. Cease placement of concrete until the temperature differential has been lowered.

9. Calculations of maximum temperature gradients within each concrete element during curing. Calculations shall include maximum possible temperature induced tensile stress in the concrete in addition to tensile stresses at 1 day, 3 days, 7 days, 28 days, and 56 days after placement. The thermal calculation model and/or computational software shall be submitted to the Engineer for approval.

10. Temperature monitoring and recording system, that shall consist of temperature sensors connected to a data acquisition system. The temperature sensor types and locations shall be specified.

11. Results of strength tests of sample cylinders. The concrete shall attain the specified strength at an age (28 or 56 days) as specified by the Engineer. Match curing of concrete is required. Match curing shall be conducted according to temperature history obtained using thermocouples typically 4 inches from surface and at the centroid of the concrete pour. The depth of the thermocouple may need to be established by the depth of rebar or other anchoring structure (See Subsection 500.3.05.AM.d.3 and Subsection 500.3.05.AM.d.5).

12. For all mass concrete construction, the TCP shall be developed by a Professional Engineer, licensed in the State of Georgia, who shall be competent in the modeling, design, and temperature control of mass concrete with at least three mass concrete projects experience that can be verified by the Department.

Place no concrete until the mass concrete mix design and the proposed TCP is reviewed and approved by the Engineer. If concrete design mixture is changed, the TCP must be updated and approved by the Engineer.

d. Temperature Monitoring and Recording System

1. Install within the concrete placed in each mass pour and in the surrounding environment of the concrete, temperature sensing devices (thermocouples) of a type approved by and at locations based on the plan approved by the Engineer.

2. The sensing system will contain as a minimum two independent sets of sensing devices in order to assure readings if one of the systems fail. The sensing devices shall be accurate to within 2°F range.

3. Thermocouples shall be placed at the centroid of the pour, or wherever the point of expected maximum temperature is anticipated. Additional thermocouples shall be placed on the exterior to monitor the maximum temperature differential. Ensure the thermocouples are placed at a depth of 2 to 6 inches below the surface.

4. The temperature monitoring and recording system for mass concrete shall consist of temperature sensors connected to a data acquisition system capable of printing, storing, and downloading data to a computer. Data shall be printed and submitted to the Engineer daily with a copy sent to Office of Materials and Testing.

5. Two independent sets of sensing devices shall be placed at each of the following locations and readings to be taken hourly: (1) center of the mass pour; (2) midpoint of the side which is the shortest distance from the center; (3) midpoint of the top surface; (4) midpoint of the bottom surface; and (5) corner of the mass pour which is furthest distance from the center. Ensure the thermocouples are placed at a depth of 2 to 6 inches below the surface.

e. Placing and Curing Mass Concrete

When placing and curing mass concrete do the following:

1. Maintain a temperature differential of 35 °F or less between the interior and exterior portions of the designated mass elements.

2. Monitor and maintain records of the concrete temperature, beginning with casting and continuing until the maximum temperature is reached and begins decreasing to a differential of no more than 35°F from the mean annual ambient temperature of the surrounding environment, for three consecutive days.

3. The contractor shall suggest consolidation techniques based on the placement technique to be used for mass concrete. The consolidation technique shall be reviewed and approved by the Engineer before start of placement of mass concrete. Slump tests or slump-flow (ASTM C 1611) tests, as applicable, shall be used to provide quality control from batch to batch.

4. Maintain a minimum concrete placement rate of 30 cubic yards per hour or as designated on the plans or in the Special Provisions. Any requested change from this placement rate is to be approved by the Engineer.

f. Acceptance

Mass concrete shall conform to the concrete acceptance criteria and the temperature requirements as stated earlier to prevent delayed ettringite formation (DEF) and thermally induced stress cracks.

If the Contractor fails to conform to any of the above temperature requirements in any one pour, any additional mass concrete pours will cease. The Engineer may, at its sole discretion, direct that the concrete be removed or otherwise mitigated, at no cost to the Department. The contractor shall revise the Thermal Control Plan and design calculations to correct the problem and resubmit the revised Thermal Control Plan. Mass concrete placement shall not begin until the Engineer has approved the revised Thermal Control Plan. No extension of time or compensation will be made for any rejected mass concrete element or revisions of the Thermal Control Plan.

Revised: January 18, 2018
First Use Date: January 18, 2018

DEPARTMENT OF TRANSPORTATION
STATE OF GEORGIA

SPECIAL PROVISION

PROJECT NO.:

P.I. NO.: 0010212

Section 500—Concrete Structures

Add the following Subsections to Section 500:

500.1 General Description

This work includes furnishing ultra high performance concrete (UHPC) field cast joints to accelerate bridge construction.

500.1.02 Related References

A. Standard Specifications

Section 109—Measurement and Payment

500.1.03 Submittals

I. Ultra High Performance Concrete

1. Documented experience of manufacturing UHPC for at least five projects.

2. UHPC mix design in accordance with the material performance measures stated in this specification.

3. For UHPC mixed at the site, documentation of equipment meeting the UPHC Manufacturer's recommendations.

J. UHPC Pour Details

Provide details for placement of UHPC. Start placement of UHPC at the lowest pont of bridge and limit length of UHPC pours to a maximum of 10 feet horizontal.

500.2 Materials

Ensure that materials for Ultra High Performance Concrete (UHPC) meet the following Specifications:

The material shall be Ultra High Performance Concrete with all components supplied by one manufacturer. Materials commonly used in UHPC include: fine aggregate, cementious material, super plasticizer, accelerator and steel fibers (deformed, specifically made for steel reinforcement of concrete). The Contractor is responsible for UHPC mix design and ensure material meets:

Minimum Compressive Strength (ASTM C39)	
Heat-Treated*	≥ 25 ksi
Not Heat-Treated	≥ 21 ksi
Not Heat-Treated 4 day	≥ 12 ksi
Prism Flexural Tensile toughness (ASTM C1018**, 10 in. span)	$I_{30} \geq 48$

Long-Term Shrinkage (ASTM C157; initial reading after set)	≤ 800 microstrain
Chloride Ion Penetrability (ASTM C1202)	≤ 250 coulombs
Chloride Ion Penetrability (AASTHO T259; 1/5 in. depth)	< 0.07 oz/ft^3
Scaling Resistance (ASTM C672)	y < 3
Abrasion Resistance (ASTM C944 2x weight; ground surface)	< 0.025 oz. lost
Freeze-Thaw Resisitance (ASTM C666A; 600 cycles)	RDM > 96%
Alkali-Silica Reaction (ASTM C1260; tested for 28 days)	Innocuous
* Heat-Treated – According to manufacturer's recommendation, temperature not to exceed 250°F ** This ASTM test has been discontinued. The Department continues to require it while options are explored for its replacement.	

Provide a UHPC mix design that contains steel fibers at a minimum of 2% by total volume of UHPC.

Provide certification of UHPC.

A minimum of 12 cylinders 3 in. X 6 in. shall be cast.

All cylinders shall be cured using the same method of curing proposed to be used in the field. The temperature during curing shall be within 18°F of the low end of the proposed temperature range for curing in the field. Test 2 cylinders each testing day. Test at 4 days, 7 days, 14 days and 28 days. Measure compressive strength in accordance with ASTM C39. Compressive strength shall meet 12 ksi minimum at 4 days and 21 ksi minimum at 28 days. Only a UHPC mix design that passes these test may be used in the work.

Cast 6 additional cylinders 12 in. diameter and 7½ in. deep. Each cylinder shall have one 32 in. long epoxy-coated reinforcing bar cast in the center of the circular face. The axis of the bar shall be perpendicular to the finished surface. Three (3) of the bars shall be #6 bars embedded 5 inches deep and 3 of the bars shall be #4 bars embedded 3 inches deep. Keep cylinders wet for 4 days prior to testing. Perform test as soon as practical once samples have reached a minimum compressive strength of 12 ksi. This test is a pullout test. The samples pass if the bars yield without the UHPC failing and without the bars pulling out of UHPC.

Results of these tests shall be conducted by a GDOT approved testing firm. Submit results for review and approval to the Engineer a minimum of 60 days prior to use of UHPC in the field.

500.3 Construction Requirements

500.3.01 Personnel

A. Supervision, Personnel, and Skilled Workers

4. Provide a manufacturer's representative supplying the approved UHPC who is knowledgeable in the supply, mixing, delivery, placement and curing of UHPC material. This representative shall be on site during all placement of UHPC.

500.3.03 Preparation

A. Pre-Pour Meeting

Prior to the initial placement of the UHPC, conduct an on site meeting with a manufacturer's representative supplying the approved UHPC and the Engineer. The objective of the meeting will be to clearly outline the procedures for mixing, transporting, finishing and curing of the UHPC material.

500.3.05 Construction

AM. Form Work, Batching and Curing

The design and fabrication of forms shall follow approved shop drawings and shall follow recommendations of the manufacturer. All forms for UHPC shall be constructed from plywood unless otherwise shown in the plans. The forms shall be coated to prevent absorption of water. Provide water tightness of forms to prevent loss of UHPC during pours.

Follow batching sequence as specified by the supplier and approved by the Engineer. The surface of UHPC field joints shall be filled flush to plus 1/4 in. above surface of bridge deck.

Cure UHPC in form according to Manufacturer's recommendations and as approved by the Engineer to attain 28 day strength listed herein. A continuous curing temperature of a minimum of 60°F is recommended.

500.3.06 Quality Acceptance

A. UHPC

Measure the slump flow on each batch of UHPC. The slump flow will be conducted using a mini-slump cone. The flow for each batch shall be between 7 in. and 10 in. Record slump flow for each batch and submit to the Engineer.

Make four sets of compressive strength test samples for each day of placement. Each set consists of 3 cylinders 3 in. X 6 in. Cure all cylinders in an environment similar to material placed and approved by the Engineer. Test the first set of cylinders as directed by the Engineer. Test second set of cylinders at 28 days. The third set of cylinders will be submitted to GDOT Office of Materials and Testing between the 4th day and the 14th day. The fourth set will be treated as a reserve set.

500.5 Payment

This Work will be paid for at the Contract Price per Lump Sum, complete in place and accepted.

Payment is full compensation for all things, including incidentals, and direct and indirect cost, to complete the Work.

Payment will be made under:

Item No.	Item	Payment
500	Ultra High Performance Concrete, Br No -	Per lump sum

DEPARTMENT OF TRANSPORTATION
STATE OF GEORGIA
SPECIAL PROVISION

PROJECT NO.

P.I. NO. 0010212

Section 511 – Reinforcement Steel

Add the following to 511.2 Materials, B. Fabrication:

2. **Reinforcement Steel Couplers.** When couplers are indicated on the Plans, use mechanical butt splices from an approved source listed on QPL 93.

   Provide mechanical butt splices which develop a minimum of 125% of the guaranteed yield strength of the reinforcing steel to be spliced. Limit the total slip of the reinforcing bars within the splice sleeve after loading to 30 kips per square inch (207 MPa) and relaxing to 3 kips per square inch (21 MPa) to no more than the following, as measured between gauge points clear of the splice sleeve: 0.010 of an inch (.25mm) for reinforcing bars no. 14 (43) or smaller, or 0.030 of an inch (.76mm) for reinforcing bars no. 18 (57).

   Prior to installation on GDOT projects, the contractor is required to submit job-control samples for testing to the Office of Materials and Testing. This is to ensure that the installer is qualified to construct the units. Make test specimens in the presence of the Engineer or his authorized representative using reinforcing steel consigned for the work. A test specimen consists of a splice made at the job site to connect two 24 inch (600mm) or longer bars using the same splice materials, position, location, and equipment, and following the same procedures to be used to make splices in the work. Prior to incorporating couplers into the work, make and test three specimens that meet the above criteria.

   Perform all testing required above by the Office of Materials and Testing or at a testing laboratory approved by the Department.

   If threaded couplers are used, equip them with approved devices which will prevent rotation after installation.
   After installation, clean all couplers with a power wire brush or by other approved methods and recoat the couplers with a material prepared and recommended by the coating manufacturer.

   Install the couplers in strict accordance with the manufacturer's instructions and as approved by the Engineer.

   All costs for the couplers, test samples (including reinforcing steel for tests) and testing of couplers shall be included in the costs of reinforcing steel.

DEPARTMENT OF TRANSPORTATION
STATE OF GEORGIA

SPECIAL PROVISION

PROJECT NO.:
P.I. NO. 0010212

Section 581—Pot Bearings

Delete Section 581 in its entirety and add the following:

Disc Bearings

581.1 General Description

This work includes furnishing and installing disc bearings (fixed and expansion types). Use the quality, type, and size designated in this Specification, on the Plans, or ordered by the Engineer.

581.1.01 Definitions

General Provisions 101 through 150.

581.1.02 Related References

A. Standard Specifications

Section 501—Steel Structures

Section 506—Expanded Mortar

Section 535—Painting Structures

Section 851—Structural Steel

Section 852—Miscellaneous Steel Materials

Section 885—Elastomeric Bearing Pads

Section 886—Epoxy Resin Adhesives

Section 887—Bearing Plates with Polytetrafluroethylene Surfaces

B. Referenced Documents

ASTM A 709 Grade 36 (ASTM A 709M Grade 250)

A 709 Grade 50 (A 709M Grade 345)

581.1.03 Submittals

Provide the following reports to the Project Engineer and the Office of Materials:

- Certified test reports
- Materials certificates
- Certificate of Compliance to conform with the requirements in this Specification
- Shop drawings
- Certification

A. Shop Drawings

Before fabricating the bearings, submit to the Engineer Shop Drawings according to Subsection 501.1.03.B, "Shop Drawings." Include the following on the drawings:

- Bearing plan and elevation
- Complete details and sections that show the materials incorporated into the bearing
- ASTM or other material designations
- Vertical and horizontal load capacity
- Rotation and translation capacity
- Compression stress on sliding surfaces and elastomeric surfaces at maximum and minimum design loads
- Complete design calculations
- Complete erection and installation procedure

B. Certification

Have the disc bearing manufacturer furnish the following to the Project Engineer and the Office of Materials:

- Certified test reports
- Material certificates
- Certificate of compliance to conform with these Specifications for each bearing furnished

581.2 Materials

Ensure that materials meet the requirements of the following Specifications:

Material	Section
Painting	535
Structural Steel	851
Anchor Bolts, Nuts, and Washers	852.2.02
Elastomeric Bearing Pads	885
Epoxy Resin Adhesives	886
Bearing Plates with PTFE Surfaces	887

A. Metals

Use the stainless steel sliding surfaces indicated below:

- Stainless Clad Steel Plate: Minimum eight percent stainless steel conforming to the requirements of ASTM A 264 (both Shear Strength and Bond Strength tests in 8.13 and 8.14 of ASTM A 264 are required). Use stainless steel cladding that meets Type 304. Use backing steel (base metal) that meets ASTM Designation A 709 Grade 50W (A 709M, Grade 345 W).
- Stainless Steel Plate Welded To A Steel Backup Plate: Use at least 16 gage (1.6 mm) thickness of the stainless steel plate that meets ASTM 240 Type 304. Use steel backing plate that meets ASTM Designation A 709 Grade 50W (A 709M Grade 345W) unless otherwise indicated on the Plans. Use qualified welders to weld the stainless steel plate to the steel backing. Furnish welding procedures and welder qualification documents to the Department for review and approval prior to fabrication. Weld entirely around the perimeter of the stainless steel plate.
- Solid Stainless Steel Plate: Mill-finish the stainless steel sliding surfaces to a maximum surface roughness of 20 micro-inches (0.50µm), RMS, according to the requirements of ANSI Standard B 46.1. Remove and replace, at no additional cost to the Department, bearing plates whose stainless steel sliding surfaces have been scratched or damaged.

B. Structural Steel

Use structural steel for the masonry plates and the components of the bearings that meet the requirements of these ASTM Specifications:

- ASTM A 709, Grade 36 (ASTM A 709M, Grade 250)
- A 709, Grade 50 (A 709M, Grade 345)

Machine the steel plates confining the disc from solid steel plates.

C. Anchor Bolts

Use anchor bolts, including nuts and washers, that meet the requirements of Subsection 852.2.02.

D. Polyether Urethane Elastomeric Disc

Ensure that the disc material is 100 percent polyether urethane meeting the following Specifications:

Property	Test Method	Range of Values
Hardness, Durometer D	ASTM D 2240	62 + or -2
Tensile Stress psi at 100% elongation at 200% elongation	ASTM D 412 Pulled at 20 in/min. (pulled at 8.5 mm/s)	2,030 minimum 3,771 minimum (14 minimum) (26 minimum)
Tensile Strength	ASTM D 412	5,000 minimum (34.5 minimum)
Ultimate Elongation, %	ASTM D 412	220 minimum
Compression Set, 22 hours at 159 degrees F., % (71° C, %)	ASTM D 395	40% maximum
Compression Strain, % at 5,000 psi stress* (35 MPa)		Strain % 8.0 min 15.0 max

* Compression stress is based on the net plan area of the rotational element and the compressive strain is the percentage of the original thickness. Gross bearing dimensions shall have a tolerance of -0 inch to + 1/8 inch (-0 mm to +3 mm).

E. Shear Restriction Mechanism

Design a shear restriction mechanism to take horizontal forces at all possible vertical loads that consists of a pin connected to the bottom plate and a ring connected to the upper bearing plate.

F. Expanded Mortar

Set anchor bolts in preformed or drilled holes using expanding mortar that meets the requirements of Section 506.

G. Paint

Paint exposed steel of each bearing assembly other than stainless steel according to System VI of Section 535. Take care to keep Polytetrafluroethylene (PTFE) or sliding surfaces free of paint.

H. Design and Applicable Codes

Design, fabricate, and erect disc bearings according to these Specifications and the applicable requirements of the following Standard Codes and Specifications.

- Section 501, including supplements
- Current AASHTO Standard Specifications for Highway Bridges

Additional design parameters with which the disc bearing manufacturer must comply:

1. Bearing on Concrete: Maximum bearing pressure is as indicated in AASHTO.
2. Polyether Urethane Disc: Design compressive strength is 5000 psi (35 MPa).
3. Virgin PTFE: Design compressive strength is 3,500 psi (25 MPa).
4. Sliding Surfaces: Accommodate translation by sliding of a hard mating surface of stainless steel across a PTFE surface.
   a. Stainless Steel Sliding Surface: Accurate, flat surface with Brinnell hardness of 125 minimum.
      1) Stainless steel sliding surface to completely cover PTFE surface in all operating positions of the bearing.
      2) Position the stainless steel sliding surface so that the sliding movement causes the dirt and dust accumulation to fall from the surface of the stainless steel.
   b. PTFE Sliding Surface: Do not use holes or slots in the PTFE sliding surface.
   c. Static Coefficient of Friction: Under a load of 3,500 psi (25 MPa), do not exceed 4 percent for unfilled PTFE nor 8 percent of filled PTFE surfaces.
   d. Rotation: 0.03 radians maximum.

I. Substituted Bearings

Disc bearings may be substituted for the bearings shown on the Plans provided the bearings to be substituted are approved by the State Bridge Engineer and comply with the following:.

1. Equal or better load carrying and moment capacity.
2. All control dimensions are maintained and bearings fit within the limits of detailed masonry plate.
3. Use filled or unfilled (recessed) PTFE.
4. Use Polyether Urethane disc material as a medium within the shear restricted disc bearing.
5. The Polyether Urethane disc shall be lined with PTFE on the bottom side of expansion guided bearings.
6. Do not use aluminum or aluminum alloy.

7. Equal or better than the pot bearings shown on the Plans in all structural respects and meets all design requirements.

581.2.01 Delivery, Storage, and Handling

A. Assembling and Marking

Have each disc bearing assembled at the plant, marked for identification, and delivered to the construction site as a complete unit.

Mark each bearing with permanent match-marks to indicate the normal position of the bearing.

B. Transportation, Storage, and Handling During Construction

Follow these guidelines to transport, store, and handle disc bearings during construction:

1. Protect each disc bearing from dust and moisture.
2. Store the PTFE surface in the shade to avoid the damaging effects of ultraviolet rays.
3. Protect the disc bearings from damage during construction and prevent contamination of the various components of the disc bearings.

Ensure that the Fabricator also follows the above requirements.

During transportation and storage, cover the bearings with moisture-proof and dust-proof covers.

581.3 Construction Requirements

581.3.01 Personnel

A. Skilled Representative

Have the bearing manufacturer provide a skilled representative who is certified by the manufacturer to be experienced in similar installations.

The representative shall:

- Give aid and instruction during the disc bearing installation.
- Be present during the initial bearing installation.
- Be present during welding of the lower steel plates to the masonry plates, if not performed in the manufacturer's shop.
- Remain on the job until the bearing installation proceeds without trouble and until the workmen are experienced with the work for each installation as determined by the Engineer.

Arrange to have the manufacturer's skilled representative present whenever requested by the Engineer.

581.3.02 Equipment

General Provisions 101 through 150.

581.3.03 Preparation

General Provisions 101 through 150.

581.3.04 Fabrication

A. Polytetrafluroethylene (PTFE)

Ensure that the PTFE, including its connection to its backup material, conforms with the requirements of Section 887, except as modified in this Specification.

Have the PTFE sliding surface bonded under factory controlled conditions to a rigid backup material that can resist bending stresses of the sliding surfaces.

As an alternate, PTFE material of twice the thickness specified above may be recessed for half its thickness in the backup material. Ensure that it is at least 1/8 in (3 mm) thick and that the PTFE sliding surface is bonded under factory controlled conditions.

1. When shown on the Plans, weld the lower steel plate to the masonry plate before installing the disc.

   If welding procedures established and approved by the Engineer restrict the temperature of the bond area to no greater than 300 °F (150 °C), welding to steel plates with a bonded PTFE surface is permitted.

   Use temperature-indicating wax pencils or other suitable means to determine the temperature.
2. After fabricating the backup material, plane it before bonding the stainless steel or PTFE to a true plane surface.
3. Have the PTFE sheets bonded at the bearing manufacturer's factory under controlled conditions in accordance with the written instructions of the manufacturer of the approved adhesive system.
4. When epoxy bonding PTFE sheets, ensure that the side of the PTFE sheet to be bonded to the metal is factory treated by the sodium napthalene or sodium ammonia process.
5. After the bonding operation, ensure that the PTFE surface is smooth, flat, and bubble free. Polish the filled PTFE surfaces.
6. Positively locate the elements of the bearing in the bearing manufacturing and assembling.
7. If using bearings other than those detailed on the Plans, obtain approval before constructing the substructure upon which the bearings will be installed.
8. Have each bearing assembled at the manufacturer's plant, marked for identification, and delivered to the construction site as a complete unit.

   Ensure that the bearings have permanent match-marks to indicate the normal position of the bearing.

581.3.05 Construction

A. Erection

Place bearings at their proper locations before erecting the superstructure supported by the bearings.

1. Install Pier Tops

   Install pier tops horizontal at the correct elevation with a plus or minus tolerance of zero. Do not install the masonry plates until the Engineer accepts the pier tops.
2. Install the Anchor Bolts

   Cast anchor bolts in the concrete or set them in preformed holes, unless otherwise shown on the Plans. If setting them in preformed holes, fill the preformed holes in the concrete substructure with epoxy grout.

   a. Insert the anchor bolts to the prescribed depth.

   b. Place additional grout as required in the annular space around the anchor bolts until the grout is well packed and flush with the top surface of the concrete.

   c. Wipe clean the exposed surfaces of the anchor bolts and substructure. Do not allow a load on grout that has not been in place at least 7 days.
3. Install Masonry Plates

   Set the masonry plates to the proper elevation on the previously finished concrete pads.
4. Install the Bearings

   a. Place the bearing at the predetermined locations when erecting the superstructure.

   b. Remove the temporary restraints as directed by the bearing manufacturer.

   c. Adjust the bearings as follows:

- Adjust the expansion bearings from the normal position at 60 °F (15 °C) to allow for the ambient temperature during erection or casting.
- Adjust the disc bearings to allow them to move when dead loads are applied. Ensure that the bearing is properly positioned and parallel (free from rotation) after applying the dead load.
- Adjust the bearings horizontally on the masonry plate to properly fit the superstructure members being erected.

d. After adjustments and approval by the Engineer, weld the bearings to the masonry plate.

581.3.06 Quality Acceptance

Instruct the manufacturer to furnish facilities to test and inspect the completed bearings in the plant or at an independent test facility. An approved testing laboratory or the manufacturer supervised by an approved independent expert shall perform the testing.

Follow these testing guidelines:

- Instruct the manufacturer to allow the Engineer and Inspectors access to the plant and test facilities.
- Furnish certified test reports, materials certificates, and a certificate of compliance to conform with the requirements in the Specifications.
- Perform testing according to Section 887 and this Specification. The Department reserves the right to sample and test the material and disc bearing assemblies as shown in Section 106.
- Test complete bearing assemblies or a specially manufactured disc bearing prototype that has a capacity of 400 kips (181 000 kg).

Successfully tested full-size bearings that meet the requirements of this subsection and have no damaged components, finishes, or surfaces may be used in construction. Provide prototype disc bearings, if used, at no additional expense to the Department.

Specific Items tested are as follows:

A. Coefficient of Friction

Perform tests to determine the static coefficient of friction of the first movement under a load of 3,500 psi (25 MPa) on a disc area applied continuously for 12 hours before testing. Determine under a load of 2,000 psi (14 MPa) on a disc area the following:

1. The static coefficient of friction value shall not exceed 10 percent for filled PTFE surfaces and 6 percent for unfilled PTFE surfaces.
2. The first movement static and dynamic coefficient of friction at a sliding speed of less than 1 in per min (0.4 mm per sec). Values shall not exceed 10 percent for filled PTFE surfaces and 6 percent for unfilled PTFE surfaces.
3. The static and dynamic coefficient of friction is determined after the bearing is subjected to 100 design movements at a speed of less than 1 ft per min (5 mm per sec). Values shall not exceed those indicated in step 2 above. Signs of bond failure or other defects are cause for disc bearing rejection.

B. Proof Loading

Perform, under maximum design loads, proof loading and compression deflection tests on a full-size disc bearing.

C. Rotation

The Polyether Urethane element shall be capable of retaining initial contact with the steel bearing plates through the rotational range under a compressive load equal in magnitude to the design load.

D. Cold Flow

Subject an approved sample of filled PTFE or unfilled PTFE to a static pressure of 3,500 psi (25 MPa) for at least 24 hours. Ensure that the PTFE material is bonded or mechanically connected to its backup material in the same way as the disc bearing.

Apparent cold flow of the PTFE material is cause for disc bearing rejection.

581.3.07 Contractor Warranty and Maintenance

General Provisions 101 through 150.

581.4 Measurement

Disc bearing assemblies are measured by Lump Sum for each bridge. Determine the actual quantities required before submitting the bid.

581.4.01 Limits

General Provisions 101 through 150.

581.5 Payment

The work in this Specification will be paid for on a Lump Sum basis.

Payment is full compensation for:

- Furnishing materials and equipment including structural steel components of the bearings, masonry plates, top plates, sole plates, PTFE, Polyether Urethane Disc, anchor bolts, and welding
- Designing the disc bearing
- Performing tests
- Furnishing prototype bearings and test samples
- Performing Work as described and specified in this Specification or the Plans
- Providing incidentals to complete the work

Payment will be made under:

Item No. 581	Pot bearings, bridge No.___	Per lump sum

581.5.01 Adjustments

General Provisions 101 through 150.

Revised: January 22, 2018
First Use Date: January 18, 2017

DEPARTMENT OF TRANSPORTATION
STATE OF GEORGIA

SPECIAL PROVISION

PROJECT NO.:

P.I. NO.: 0010212

Section 627—Mechanically Stabilized Embankment Retaining Wall-Contractor Design

Delete Subsection 627.3.03.B and substitute the following:

B. Wall Design

Use the following design criteria for a Contractor designed wall:

1. Provide one of the following wall systems:
   ARES (Tensar Earth Technologies)
   Reinforced Earth Wall (The Reinforced Earth Company)
   Sine Wall MSE Panel Systems (Sine Wall)
   Stabilized Earth Wall (Vistawall Systems)
   Tricon Retained Soil Wall (Tricon Precast)
2. Design the MSE Wall according to the AASHTO LRFD Bridge Design Specifications, 7th Edition, 2014.
3. Design the MSE wall to account for all live load, dead load and wind load from all traffic barrier, lights, overhead signs, sound barriers and other appurtenances located on top and adjacent to the wall. Design MSE walls to account for all external forces. Also, design bridge abutment walls for a lateral load as defined in the plans. If lateral load is not defined on plans then design bridge abutment wall for a lateral load equal to 5% of the dead load transmitted through the bearings, as reported on the bearing sheet of the bridge. This load shall be considered a destabilizing force for the entire reinforced mass as well as a load to be resisted by reinforcement attached to the back of the abutment seat. It should be applied at the top of the abutment seat.
4. Design MSE Walls within 100 feet of a bridge abutment for a minimum service life of 100 years.
5. Assume responsibility for all temporary shoring that may be necessary for wall construction. Design the shoring using sound engineering principles.
6. Use permanent concrete wall facing panels that are at least 7 in (175 mm) thick.
7. Provide a minimum length of soil reinforcement as defined in the plans. If the minimum is not defined in the plans, then provide a minimum length of soil reinforcement of 10 feet (3 m) or seven-tenths (0.7) of the wall height, whichever is greater.
8. Ensure that the special wall backfill extends a minimum of 12 in (300 mm) past the end of the soil reinforcement.
9. Use the Architectural treatment of facing panels as indicated on the Department's drawings.

10. Provide internal walls to allow for future widening if shown on the wall envelope. Ensure the internal walls have galvanized wire or concrete facing. Ensure as a minimum that the facing of the internal walls extend to the back limit of the MSE Wall Backfill for the permanent wall.
11. Ensure the maximum panel area does not exceed 35 square feet (3.25 square meters).
12. Design the Traffic Barrier H or Coping B Parapet to satisfy the requirements of AASHTO LRFD Section A13.2-1 for a railing Test Level of TL-4 except that the Ft load shall equal 76 kips. Evaluate overturning and sliding using a 10 kip force distributed to a maximum length of the moment slab joint spacing.
13. A Foundation Investigation Report may be available from the Geotechnical Engineering Bureau of the Department. The information contained in this report may be used by the Contractor to assist in evaluating existing conditions for design as well as construction. However, the accuracy of the information is not guaranteed and no requests for additional monies or time extensions will be considered as a result of the Contractor relying on the information in this report.
14. Ensure the following requirements are met:
    - The gutterline grade on the proposed top of wall submitted matches the gutter elevations required by the plans.
    - The top of coping is at or above the top of coping shown on the envelope.
    - The leveling pad is at or below the elevation shown on the wall envelope.
    - Any changes in wall pay quantities due to changes in the wall envelope are noted in the contractor's plans
    - All changes in quantities due to the proposed walls being outside the wall envelope (step locations, ending wall at full panel, etc.) are shown as separate quantities.
15. Ensure the minimum embedment of the wall (top of leveling pad) is at least 2 feet (600 mm). If the soil slopes away from the bottom of the wall, lower the bottom of the wall to provide a minimum horizontal distance of 10 ft (3 m) to the slope. [i.e. a 2:1 slope in front of the wall requires 5 ft (1.5 m) of embedment; a 4:1 slope in front of the wall requires 2.5 ft (750 mm) of embedment]
16. If the Department's review of the submitted plans and calculations results in more than two submittals to the Department by the Contractor, the Contractor will be assessed for all reviews in excess of two submittals. The assessment for these additional reviews will be at the rate of $60.00 per hour of engineering time expended.

Revised Date: July 14, 2014
First Use Date 2001 Specifications: June 1, 2005

DEPARTMENT OF TRANSPORTATION
STATE OF GEORGIA

SPECIAL PROVISION

PROJECT NO.: HALL COUNTY
P.I. NO.: 0010212

SECTION 628—PERMANENT SOIL NAILED WALLS

628.1 General Description

This work includes furnishing materials, labor, tools, equipment, and other incidental items to design, detail, and construct a soil nailed wall. This Specification also applies to any Contractor-proposed alternate design of Department-furnished plans.

628.1.01 Definitions

Soil Nail - Synonymous with nail or soil reinforcing

The term Soil Nailed Wall includes the following items:

- Soil nails
- Nails
- Shotcrete (pneumatically applied concrete) – for temporary facing
- Cast-in-place reinforced concrete facing – for permanent facing
- Drainage

628.1.02 Related References

A. Standard Specifications

Section 500 - Concrete Structures
Section 511 - Reinforcement Steel
Section 853 - Reinforcement and Tensioning Steel

B. Referenced Documents

General Provisions 101 through 150.

628.1.03 Submittals

A. Proof of Ability

Submit the following proof of ability (or ability of the subcontractor) when requested by the Department to design or construct soil nailed walls:

- Evidence of successfully completing at least 5 projects similar in concept and scope to the proposed wall.
- Resumes of foremen, nail testing personnel, and drilling operators to be employed on this project. Show the type, length, and number of soil nails each has installed or tested within the past 5 years.
- Evidence of experience in nail testing. Persons performing nail testing shall prove experience by performing sample tests supervised by the Engineer.

The Department is the sole judge of the qualifications of the foreman, drilling operator, and testing personnel. Do not begin wall construction until the Engineer has approved proof of ability.

B. Design Criteria for Alternate Design

If the department receives more than 2 submittals of the Plans and calculations for review, the Contractor will be assessed $60 per hour of engineering time for reviews in excess of the 2 submittals.

C. Construction Drawings and Design Notes

Submit construction drawings and design notes within 28 days of the award of the Contract. The Design Engineer shall prepare and stamp the submission. Include design notes and reproducible drawings in the submission concerning the following:

- Details, dimensions, and schedules of reinforcing steel including dowels and/or studs for attaching the facing to the soil nailed wall.
- Details of the shotcrete installation and nails, including the thickness of shotcrete and spacing and angle of installation of nails.
- Detailed plans for testing of nails showing loading and measuring devices to be used and procedures to be followed.

D. Final Wall Plans and Calculations

Submit final wall plans and calculations to the Department for review and approval before beginning construction on the wall. The time required for Plan and calculation review will be charged to the allowable Contract time. The Department has 30 days for Plan and calculation review per item after receiving the structure calculations and drawings.

New submittals from the Contractor showing corrections from the Department's review or changes to ease construction or to correct field errors have a 30-day review. The Department is the sole judge of information adequacy.

The Department's review and acceptance of the final Plans and construction methods do not relieve the Contractor from successfully completing the work. Time extensions are not granted for Contractor delays from untimely submissions or insufficient information.

E. Admixture Literature

Before using an admixture, submit the manufacturer's literature to the Engineer. Indicate the admixture type and the manufacturer's recommendations for mixing the admixtures with grout.

628.2 Materials

A. Concrete

Use concrete conforming to Section 500.

B. Reinforcing Steel

Use reinforcing steel conforming to Section 511. Reinforcing steel used as soil nails shall be full length. Couplers will not be allowed.

C. Structural Steel

Use structural steel shapes or plates conforming to Section 501. Use ASTM A 709 Grade 36 (Grade 250) structural steel unless otherwise specified on the plans.

D. Cement Grout

Produce cement grout using Portland cement conforming to AASHTO M-85, Type I, II, or III, and potable water. Use cement that is fresh and free of lumps and hydration.

Follow these restrictions if using admixtures:

1. Do not use admixtures with chemicals that may harm the soil nail, reinforcing steel, or cement.
2. Do not use admixtures that cause air bubbles in the grout.
3. If approved by the Engineer, use admixtures imparting low water content, flowability, and minimum bleeding in the cement grout.

E. Plastic

Use Polyethylene conforming to AASHTO M-252 with a minimum wall thickness of 30 mils (0.76 mm) for corrosion protection.

F. Shotcrete

Use shotcrete conforming to the following:

1. Cement – Section 830.2.01 Type I, II or III.
2. Fine Aggregate – Section 801.2.02.
3. Coarse Aggregate – Section 800.2.01.
4. Fly Ash – Section 831.2.03
5. Silica Fume – AASHTO M-307.
6. Air Entraining Admixtures for wet mix – Section 831.2.01.
7. Plasticizers – AASHTO M-194, Type A, D, F, G.
8. Use accelerating admixtures that are compatible with the cement, are non-corrosive to steel and do not promote other detrimental effects such as cracking and excessive shrinkage and do not contain calcium chloride. Use admixtures in accordance with the manufacturer's recommendations. Silica fume, if used, shall not exceed 10 percent of the cement weight and shall be an admixture with a minimum of 90 percent SiO_2 with a proven record of performance in shotcrete.
9. Use water in shotcrete that is potable, clean, free from substances which may be injurious to concrete and steel, and is free of elements which would cause staining.
10. Provide premixed and prepackaged concrete products specifically manufactured as a shotcrete product for on-site mixed shotcrete, if approved by the engineer. The packages shall contain cement and aggregates conforming to Section 500.

G. Corrosion Inhibitor

Use corrosion inhibitor (grease) conforming to the following:

1. Drop point 300 degrees F (149 degrees C) minimum by ASTM D-566.
2. Flash point 300 degrees F (149 degrees C) minimum by ASTM D-92.
3. Water content 0.1% maximum by ASTM D-95.
4. Rust test – Rust Grade 7 or better after 720 hours, aggressive conditions: Rust Grade 7 or better after 1000 hours by ASTM B-117 and ASTM D-610.
5. Water soluble ions.

Chlorides	10 ppm maximum	by ASTM D-512
Nitrates	10 ppm maximum	by ASTM D-3867
Sulfates	10 ppm maximum	by APHA 427D (15th ED)

6. Oil separation – 0.5% by weight maximum at 160 degrees F (71 degrees C) by FIMS 719B, Method 321.2.
7. Soak test – 5% Salt Fog at 100 degrees F (38 degrees C), 5 mils (0.13 mm) (Q Panel Type S), immerse panels in 50% salt solution and expose to 5% Salt Fog – no emulsification after 720 hours by ASTM B117 Modified.

628.2.01 Delivery, Storage, and Handling

A. Protection Systems

Protect soil nails against corrosion by properly storing, fabricating, and handling the nail components before inserting them into the borehole. Avoid prolonged exposure of the nail components to the elements, and avoid mechanical or physical damage that reduces or impairs the component's ability to resist adverse conditions during service. Nail components will be rejected for heavy corrosion or pitting, but not for a light coating of rust.

Use the protection systems as follows:

1. Soil Nail

   Protect the entire length of the soil nail from the anchor plate to the end of the nail from corrosion.

   a. Encase the nail in a corrugated plastic tube.
   b. Use cement grout to fill the voids between the tube and the nail and the tube and the soil. Place cement grout between the soil and the tube to at least ¾ in (20 mm) thick and extend the entire length of the nail. Cement grout between the tube and the nail shall be a minimum of ½ in (12 mm) thick
   c. Provide centralizers spaced at a maximum of 5 feet (1.5 m) center-to-center throughout the nail length. Do not use wood or material harmful to the soil nail or the corrugated plastic tubing as centralizers.
   d. Provide a smooth piece of plastic sheath to encapsulate the entire free length. Do not splice the sheath. Ensure that the sheath is at least 0.05 in (1.27 mm) thick. Provide a void space between the sheath and the steel as shown on the plans and maintain that space with centralizers. Fill visible void space with grease and seal the bottom to prevent grout intrusion.

2. Area Underneath Anchorage
   Protect the area immediately behind the stressing anchorage.
   a. Weld a pipe sleeve to the bearing plate and seal the pipe sleeve to the anchor sheath at the other end of the sleeve.
   b. Clean the pipe sleeve to remove dirt, rust, or other harmful material before inserting the soil nail into the pipe sleeve.
   c. If a seal is not provided at the lower end of the pipe sleeve, during installation and grouting, fill the lower end of the pipe sleeve with grout. Keep the pipe sleeve free of harmful material until the upper portion of the pipe sleeve and anchor head are filled with grout.
   d. Fill the void inside the sleeve and anchor head with anti-bleed expansion grout after the nails have been stressed.
3. Anchorage
   Encase the anchorage system head into a corrosion protective system before proceeding to the next lift. Install the protective system for each lift within 30 days after installing the nails for that lift. Ensure that the anchorage system has a cover of at least 3 in (75 mm) once the wall face is placed.

628.3 Construction Requirements

628.3.01 Personnel

A. Contractor Qualifications

The Contractor and Subcontractor shall be experienced in constructing permanent soil nailed walls. Provide at least one Registered Professional Engineer licensed to perform work in the State of Georgia and a supervising Engineer for the Project with at least 5 years of experience in constructing permanent soil nailed walls.

Furnish verification of these qualifications to the Engineer before beginning operations.

B. Design Engineer

The Design Engineer shall:

- Be registered as a Professional Engineer in the State of Georgia
- Have considerable knowledge and experience designing and constructing soil nailed walls
- Be available at any time during the Contract to discuss the design of the walls with the Department.

C. Registered Professional Engineer

Retain the services of a second Professional Engineer licensed to perform work in the State of Georgia and prequalified by the Department. The Engineer shall operate independently from the Professional Engineer of Subsection 628.3.01.B, "Design Engineer."

This Engineer will independently check the design calculations and Plan details for the permanent soil nailed wall before submitting them to the Department.

628.3.02 Equipment

Use anchorage and hardware suitable for the type of soil nails used. Ensure that the anchorage and hardware are capable of the following:

- Developing 75 percent of the yield capacity of the nails when tested in the unbonded state and without failure of the nail
- Holding the soil nail at a load producing a stress of not less than 75 percent of the yield capacity of the nail without exceeding the anticipated set and without causing anchorage or soil nail failure
- Test nails shall be capable of lifting-off, detensioning, or retensioning a nail before secondary grouting to fill voids at the top of the pipe sleeve.

628.3.03 Preparation

Before beginning the work, survey the condition of the adjoining properties. Keep records and photograph settlement or cracking of adjacent structures that may become the subject of possible damage claims. Deliver the report to the Department before beginning work at the site.

Obtain a Foundation Investigation Report from the Geotechnical/Environmental Bureau of the Department to assist in evaluating existing conditions for design and construction.

628.3.04 Fabrication

A. Soil Nails

Fabricate the soil nails according to the approved details.

1. Keep the nails free of dirt, rust, and other harmful substances.
2. Use a plastic sheath that is a single piece without splices.
3. Before installation, handle and store the nails so as to avoid corrosion and physical damage. Nails will be rejected for damage such as abrasions, cuts, nicks, welds, weld splatters, or heavy corrosion and pitting. Replace the nails at the Contractor's expense for material replacements or time delays.

628.3.05 Construction

A. Design Criteria

The design criteria for a proposed design or design include:

1. Design soil nails according to this Specification.
2. Use reinforced concrete facing according to the latest AASHTO Standard Specifications for Highway Bridges, including interims. Ensure that the structural thickness is at least 12 in (300 mm). Provide architectural facing treatment as shown on the Department drawings.
3. Ensure that the concrete strength is at least 3000 psi (20 MPa) 28-day strength. Extend the facing 2 ft (600 mm) below the gutterline or, if applicable, the ground line adjacent to the wall unless otherwise indicated on the Department Plans.
4. Design and install permanent drainage systems behind the wall. Connect the drainage systems to the nearest drop inlet using pipe or free drainage through traffic barriers or other obstructions. Ensure that holes through traffic barriers and/or facing are no higher than 3 in (75 mm) above the gutterline or ground line.
5. Ensure that the wall is compatible with the horizontal and vertical criteria indicated in the Department Plans.
6. Provide a wall design that is adequate to resist sliding, overturning and bearing forces. Safety factors shall be as follows:

Sliding	1.50
Overturning	2.00
Bearing	1.00

   Design the wall for the design condition shown in Figure 1.
7. See Figure 3 for typical section of permanent soil nail wall.

B. Ground Movements and Load Transfer Instruments

During construction of the wall, the Department may install devices to monitor ground movements and load transfers during or after construction. The Department will schedule installation to minimize interference with the Contractor's operations. Cooperate with the instrumentation installers. Anticipate delays of two to four hours per instrumented nail.

Although the Instrumentation Specialist maintains the instruments, assume responsibility for damage to the instruments, connections or readouts from operations. Replace and install damaged equipment at the Department's approval and at the Contractor's expense.

C. Soil Nail Installation

Install the soil nails as follows:

1. Before installation, visit the site to observe existing conditions that may affect the work or design, if applicable, and to review the geotechnical data available for the Project.
2. Drive or drill the holes for the soil nails by core drilling, rotary drilling, auger drilling, or percussion drilling. If using water in the drilling operation, dispose of the water to minimize wall erosion. Repair water erosion damage to the site at no cost to the Department.
3. If the hole will not stand open, install casing to maintain a clean and open hole. Ensure that the hole diameter is at least 3 in (75 mm) if no pressure grouting is used. Pressure grouting is grouting with a pressure greater than 60 psi (415 kPa).
4. Ensure that the drill bit diameter is not more than 1/8 in (3 mm) smaller than the specified hole diameter.
5. Start soil nail holes within an angle tolerance of 3 degrees from the inclination specified on the approved design Plans. Do not allow the holes to deviate from a straight line by more than 2 in (50 mm) in 10 ft. (3 m). Do not allow the holes to extend outside the Right-of-Way limits. Thoroughly clean the holes of all dust, grease, or other deleterious material before inserting the nail.

6. Install the nail in the casing or the hole drilled for the nail. Ensure that the nail's corrosion protection is not damaged during handling or installation.
7. Install the nail in the bond length to achieve at least 1½ in (38 mm) of grout cover.
8. Do not use nails to ground electric equipment and do not subject the nails to sharp bends.
9. Provide centralizers spaced a maximum of 5 ft (1.5 m) center to center throughout the nail length. Do not use spacers of wood or other material harmful to the nail or corrosion protection.
10. Inject grout at the lowest point of the nail and place over the entire length of the nail.
    a. Ensure that the grouting equipment can continuously mix and produce lump-free grout. Equip the grout pump nozzle with a grout pressure gauge capable of measuring pressure of at least 150 psi (1 MPa) or twice the actual pressure used.
    b. Base the material proportions used in the grout on grout tests made before beginning grouting; or select the proportions based on prior documented experience with similar materials and equipment under comparable field conditions.
    c. Use the minimum water content necessary for proper placement and do not exceed a water-cement ratio of 0.45. Do not leave the grout in the mixer longer than 45 minutes.
11. After grouting, do not disturb the nail until the grout has reached a cube strength of 3500 psi (25 MPa). Keep the mouth of the hole clean after grouting. Record the following data in a Project field book during the grouting operation:
    - Type of mixer
    - Water-cement ratio
    - Type of additives
    - Grout pressure
    - Type of cement
    - Test sample strengths (before stressing)
    - Volume placed in bond and free lengths
12. If using pressure grouting, choose whether to perform a water-tightness test. However, if injecting grout with a pressure of 60 psi (415 kPa) or less, always perform a water-tightness test. Perform the test as follows:
    a. Fill the entire hole in the rock with water and subject it to a pressure of 5 psi (35 kPa) in excess of the hydrostatic head as measured at the top of the hole.
    b. If after 10 minutes the leakage rate from the hole exceeds 0.001 gal per inch diameter per foot of depth per minute (0.5 ml per mm diameter per meter of depth per minute), consolidate grout, redrill, and retest the hole. If the second water-tightness test fails, repeat the entire process.
    c. During the tests, observe holes adjacent to the hole being tested for water-tightness to detect and seal inter-hole connections.
    d. If artesian or flowing water is encountered in the drilled hole, maintain the pressure on the consolidation grout until the grout has initially set.

D. Temporary Shotcrete Facing

Provide temporary shotcrete facing.

1. Shotcrete Quality - Produce the shotcrete by the wet mix process and achieve a minimum compressive strength of 3000 psi (20 MPa) in seven (7) days and 4600 psi (32 MPa) in 28 days.
2. Mixture Proportions - Submit for acceptance the recommended mixture proportions, strength results, water cement ratio, and source of materials. Select the mixture proportions based on compressive strength tests of specimens continuously moist cured until tested at 28 days in accordance with AASHTO T-22. Use a maximum water cement ratio of 0.40, air content of 6.5% ± 1.5%, slump of 1.5 to 3 inches (38 to 50 mm). The mixture is acceptable if the average core compressive strength is at least 1.2 times the required compressive strength in 628.4.07.A above.
3. Batching and Mixing - Batch aggregate and cement by weight or by volume. Provide mixing equipment capable of thoroughly mixing the materials in sufficient quantity to maintain placing continuity. Provide ready-mix shotcrete complying with AASHTO M-157.
4. Delivery Equipment - Provide equipment capable of delivering the premixed materials accurately, uniformly and continuously through the delivery hose. Follow the recommendations of the equipment manufacturer on the type and size of nozzle to be used, and on cleaning, inspecting and maintaining the equipment. Deliver ready-mix shotcrete in transit mixers that comply with AASHTO M-157. Provide a supply of clean, dry air adequate for maintaining sufficient nozzle velocity for all parts of the work and, if required, for simultaneous operation of a suitable blow pipe for clearing away rebound. Provide a compressor capable of providing a minimum of 315 cfm (8.9 m3/min) per operating nozzle.

5. Curing:
    a. Keep shotcrete continuously moist for 24 hours after completion by one of the following methods or materials:
        - Continuous sprinkling
        - Absorptive mat or fabric, or other covering kept continuously moist
        - Curing compounds in accordance with Section 500.3.05.Z. On natural gun or flash finishes, apply one gallon per 100 square feet (0.4 l per square meter). Do not use curing compounds on any surfaces against which additional shotcrete or other cementitious finishing materials are to be bonded unless positive measures, such as sandblasting, are taken to completely remove curing compounds prior to application of such additional materials.
    b. Provide final curing immediately following the initial curing and before the shotcrete has dried by one of the following materials or methods:
        - Continuation of the method used in the initial curing
        - Application of impervious sheet material conforming to AASHTO M-171.
    c. Continue curing for the first seven days after shotcreting or until the required seven-day strength is obtained. During the curing period, maintain the shotcrete above 38 degrees F (3.3 degrees C) and in a moist condition as specified.
6. Construction Testing - Cut cores from the structure and test in accordance with AASHTO T-24. Take a minimum of three cores from each 1000 square feet (93 square meters) of completed facing. Alternatively, construct a test panel with minimum dimensions of 18 X 18 X 4 in (450 X 450 X 100 mm) gunned in the same position as the work represented for each 1000 square feet (93 square meters) of completed facing. The Contractor's regular nozzlemen shall gun the panels during the course of the work. Field cure the panels in the same manner as the work, except that the test panels shall be soaked for a minimum of 40 hours prior to testing. Cut a minimum of three cores from each panel for testing in accordance with AASHTO T-24. The average compressive strength of each core of a set of three cores must equal or exceed 85 percent of the compressive strength specified in 628.3.05.A.

E. Permanent Cast-In-Place Facing

Provide permanent cast-in-place reinforced concrete facing in accordance with the requirements of this specification, as shown in the plans and the following:

1. Provide vertical expansion joints at a maximum spacing of 90'-0"
2. Provide vertical contraction or construction joints at a maximum spacing of 30'-0"
3. Form vertical rustication grooves at a maximum spacing of 10'-0". Rustication grooves are to be equally spaced between expansion joints and coincide with construction joints.
4. Provide studs in the construction of the soil nail system for anchoring the cast-in-place facing.

628.3.06 Quality Acceptance

A. Nail Testing and Acceptance

Perform testing according to this subsection.

Perform load tests on at least 5% of the nails in each row to verify the soil-to-grout bond stress used in the design.

Provide separate nails specifically for the purpose of testing. Test nail locations shall be approved by the Engineer. Test nails will not be considered part of the permanent support system. Install the test nails in accordance with Figure 2.

Grout only the bonded length of the nail prior to testing. Provide and use the following testing equipment:

- A dial gauge that can measure elongation to the nearest 0.001 in (0.025 mm)
- A hydraulic jack and pump with a pressure gauge graduated in increments of 100 psi (690 kPa) or less.

Test by incrementally loading the nail according to the following schedule:

AL
0.25P
0.50P
0.75P
1.00P
1.25P
1.50P

where:

AL = minimum load required to support the jacking system tightly against the bearing surface = 2 kips (8.9 kN).
P = design load

Measure the nail movement with the dial gauge fixed to an independent reference point. Apply the load with a hydraulic jack and measure it with a hydraulic pressure gauge. Increase the load from one increment to the next immediately after the nail movement is recorded.

Hold the maximum test load for ten (10) minutes. Start the load hold period as soon as the maximum test load is applied, and measure the nail movements at one (1), two (2), three (3), four (4), five (5), six (6), and ten (10) minutes. The nail test is acceptable if the nail carries the maximum test load with less than 0.08 in (2 mm) of movement between one (1) and ten (10) minutes.

If the nail fails the test, determine the cause. If the failure indicates that the nails will not achieve the design soil-to-grout bond stress, then modify the design and/or construction procedures. These modifications may include, but are not limited to, installing replacement nails, reducing the design bond stress by increasing the number of soil nails or by lengthening the nails, or modifying the installation methods. After modifications, test the nails for acceptance of the new design. Make the modifications of the design and/or construction procedures at no cost to the Department unless the modifications are due to changed conditions.

After completion of testing and determination of acceptance, detension all test nails and all nails shall be tensioned to 200 ft-lb (270 N-m) of torque.

628.4 Measurement

Permanent Soil Nailed Walls are not measured separately for payment.

628.5 Payment

Payment for this work is made per Lump Sum. Payment includes costs for concrete, reinforcing steel, excavation, backfill, shotcrete, soil nails, anchorages, labor, design, and all other materials and equipment. Payment also includes grouting, drilling holes, performing and evaluating all tests, submitting records of tests, all tools and all other items to complete the work.

Payment will be made under:

Item 628	Permanent Soil Nailed Wall, wall no. ___	Per lump sum

628.5.01 Adjustments

Additional wall area required because of unforeseen foundation conditions or other reasons that are approved by the Engineer will be paid for by adjusting the Lump Sum Price Bid. If the wall area is increased or decreased, the Lump Sum Price Bid will be adjusted proportionally based on the change in wall area as determined from the stations, elevations and dimensions on the Plans.

No additional compensation will be made for additional material, equipment, design, or other items to comply with the Project specifications as a result of the Department's review of the contractor's design.

OFFICE OF BRIDGE DESIGN

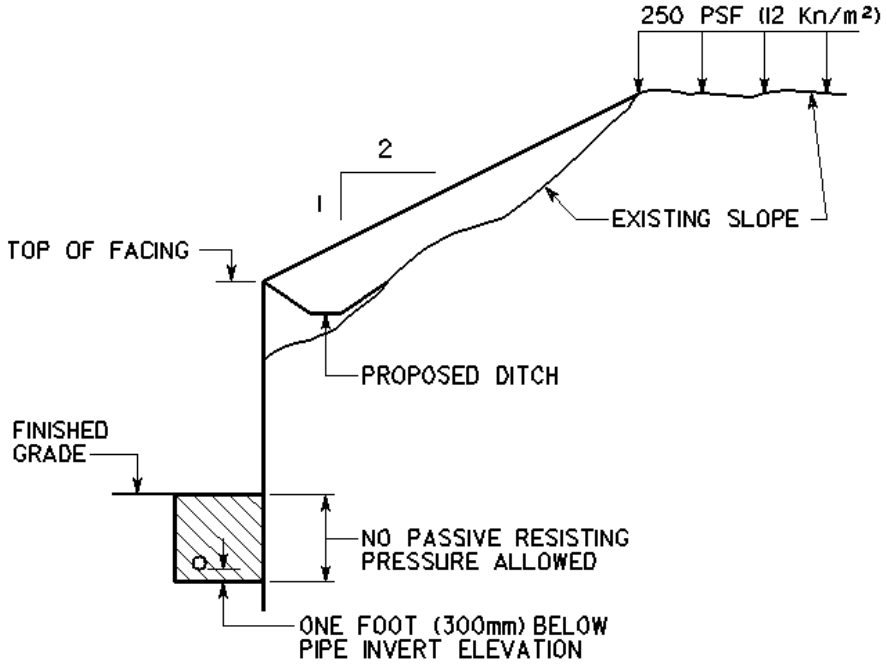

DESIGN CONDITION

FIGURE 1

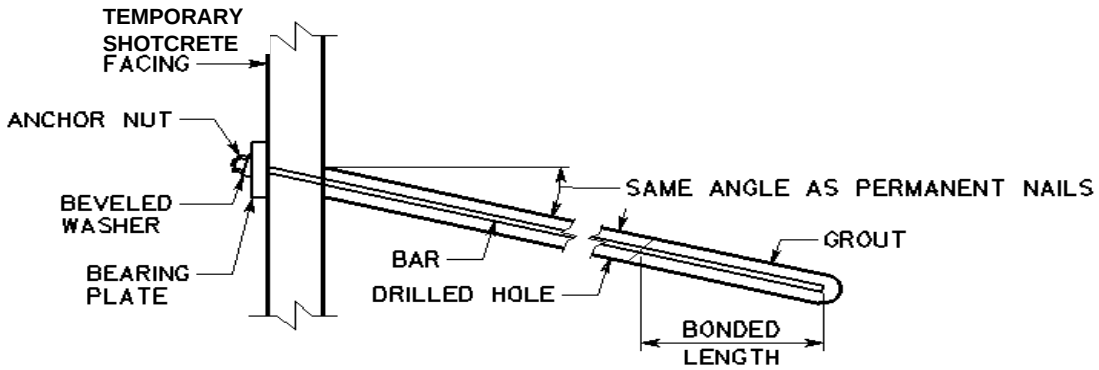

TEST NAIL DETAIL

NO SCALE

FIGURE 2

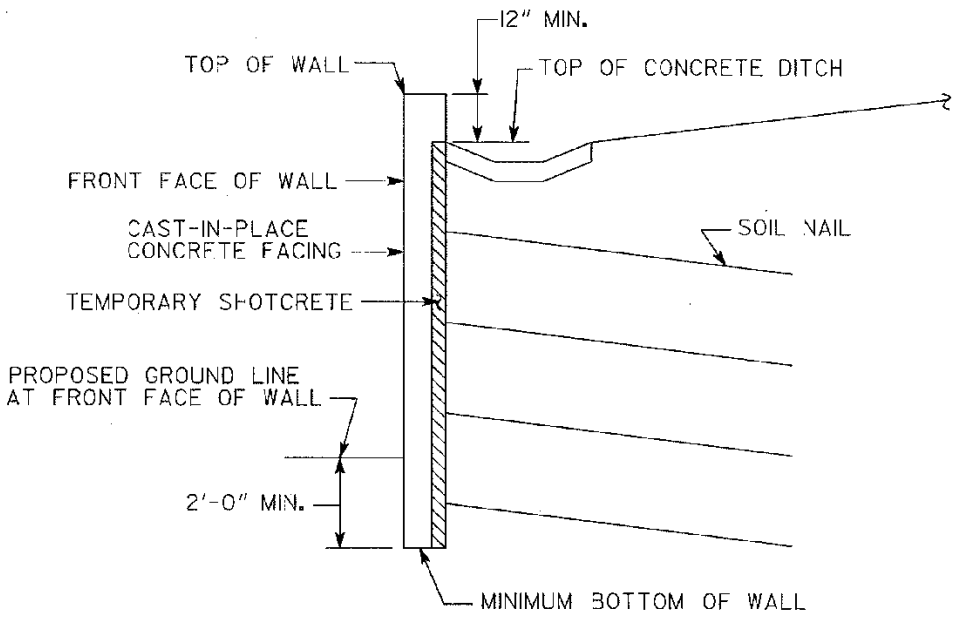
12" MIN.
TOP OF WALL
TOP OF CONCRETE DITCH
FRONT FACE OF WALL
CAST-IN-PLACE
CONCRETE FACING
SOIL NAIL
TEMPORARY SHOTCRETE
PROPOSED GROUND LINE
AT FRONT FACE OF WALL
2'-0" MIN.
MINIMUM BOTTOM OF WALL

FIGURE NO. 3

Georgia Department of Transportation

State of Georgia

Special Provision

PROJECT NO.:

P.I. NO.: 0010212

Section 865—Manufacture of Prestressed Concrete Bridge Members

Delete Subsection 865.1 and substitute the following:

This section includes the following requirements for precast-prestressed concrete bridge members and piling using High Performance Portland cement concrete as shown in the Plans:

- Manufacturing
- Inspecting
- Testing
- Marking
- Painting
- Rubbing as specified
- Plant handling
- Storing
- Shipping

The term "precast-prestressed concrete" is referred to as "prestressed concrete" in the rest of this Section.

Add the following to Subsection 865.2:

Material	Section
Concrete, Class AAA HPC	500

Add the following to the end of Subsection 865.2.01.B.7.a.6:

Optional Method of Curing for Release Strengths with HPC: Temperature match curing ("Sure Cure" or equivalent methods) is allowed for specimens used to determine when stress may be transferred to the concrete for High Performance Concrete Units.

Revised: August 9, 2018
First Use Date: January 5, 2015

DEPARTMENT OF TRANSPORTATION
STATE OF GEORGIA

SPECIAL PROVISION

PROJECT NO.: HALL COUNTY

P.I. NO. 0010212

Section 999—Precast Concrete Bridge Deck

Add Section 999 as follows:

999.1 General Description

This work includes furnishing full depth precast concrete bridge deck panels with field cast joints to accelerate bridge construction.

999.1.01 Definitions

General Provisions 101 through 150.

999.1.02 Related References

A. Standard Specifications

Section 109—Measurement and Payment

Section 500—Concrete Structures

Section 511—Reinforcement Steel

Section 801—Fine Aggregate

Section 830—Portland Cement

Section 853—Reinforcement and Tensioning Steel

B. Referenced Documents

SOP-3, Standard Operating Procedures for Precast/Prestressed Concrete

QPL 9 – Certified Prestressed and/or Precast Concrete Plants

QPL 93 – Rebar Mechanical Butt Splices

General Provisions 101 through 150.

999.1.03 Submittals

A. Precast Concrete Deck Panel Shop Drawings

Submit shop drawings detailing the fabrication of the precast deck panels for approval of the Engineer. Include fabrication tolerances. Method for grinding to achieve deck profile and longitudinal grooving shall be detailed in the shop drawings.

B. Erection Drawings and Field Pour Details

Submit erection drawings detailing the installation of precast deck panels and procedures for adjusting panels to fit the bridge deck profile shown in the plans. Provide installation tolerances for placement and adjustment of precast deck panels. Provide details for placement of field cast joints.

C. Accelerated Bridge Construction Schedule

Submit a detailed shedule for approval of the Engineer outlining construction operations from the time the road is closed to traffic until traffic is resumed. At a minimum, this schedule shall include the removal of existing bridge, construction of substructure, placement of beams, installation and adjustment of precast deck panels, installation of formwork, placement of endwalls and wingwalls, placement of field cast joints, placement of concrete barrier, endpost and barrier transition, placement of approach slabs and pavement.

999.2 Materials

Provide precast concrete deck panels in accordance with the plans and Specifications.

999.2.01 Delivery, Storage, and Handling

General Provisions 101 through 150.

999.3 Construction Requirements

999.3.01 Personnel

General Provisions 101 through 150.

999.3.02 Equipment

General Provisions 101 through 150.

999.3.03 Preparation

General Provisions 101 through 150.

999.3.04 Fabrication

General Provisions 101 through 150.

Apply the following tolerances for precast units, unless otherwise shown elsewhere in the plans:

1. Thickness:
   Limit variation in as built panel thickness and thickness shown in the accepted shop drawings to plus 3/16 inch (4 mm) and minus 0 inches (0 mm).
2. Horizontal Dimensions:
   Limit variation between as built panels and dimensions shown in the accepted shop drawings to no more than 1/4 inch (6mm) . Squareness of the panel (measured along the diagonal length) shall be within 1/2 inch. Limit horizontal alignment (deviation from straight line parallel to centerline of member) to be no more than 1/8 inch per 10 feet, but not greater than 3/8 inch for the entire length. Greater deviation may be accepted if, in the Engineer's opinion, it does not impair the suitability of the member for its intended use.
3. Deck Surface:
   Deck surfaces must meet straightedge requirement in longitudinal and transverse directions in accordance with section 500.3.06.D of the Specifications

Fabricate the deck panels in a concrete fabrication plant that has been approved according to Laboratory SOP-3, Standard Operation Procedures for Precast Prestressed Concrete. See QPL 9 for a list of approved facilities.

999.3.05 Construction

Construct precast deck panel with field cast joints in accordance with the plans, Specifications and approved installation procedures.

Grind the bridge deck for profile improvement as required by the plans, in conformance with Section 500.3.06.E of the Specifications.

Saw cut transverse grooves into top of bridge deck using a mechanical cutting device after grinding. Saw cutting grooves shall conform to Section 500.3.05.T.9.C of the Specifications.

999.3.06 Quality Acceptance

See Sub-Section 500.3.06 for Quality Acceptance.

999.3.07 Contractor Warranty and Maintenance

General Provisions 101 through 150.

999.4 Measurement

Measurement is made as a unit, complete in place, for precast concrete bridge deck panels

999.4.01 Limits

General Provisions 101 through 150.

999.5 Payment

This Work will be paid for at the Contract Price per Lump Sum, complete in place and accepted. Payment is full compensation for all things, including incidentals, and direct and indirect cost, to complete the Work.

Payment will be made under:

Item No.	Item	Payment
999	Precast Concrete Bridge Deck, Br No -	Per lump sum

Georgia Department of Transportation

Technical Provisions

For

Design-Build Agreement

P.I. No. 0010212

MASH Compliant GDOT Bridge Barriers

Attachment 13-2

ATTACHMENT 13-2

MASH Compliant GDOT Bridge Barriers

PI 0010212

MASH Compliant GDOT Barriers				
Barrier	**GDOT 36" Height Single Slope Barrier**	**GDOT 42" Height Single Slope Barrier**	**GDOT 36" Height Single Slope Barrier with Fence Post**	**GDOT 42" Height Single Slope Barrier with Fence Post**
f'_c (28-day concrete strength)	4000 psi	4000 psi	4000 psi	4000 psi
MASH Test Level	TL-4	TL-4	TL-4	TL-4
F_t	68.0 kips	80.0 kips	68.0 kips	80.0 kips
L_t	4 ft.	5 ft.	4 ft.	5 ft.
Typical Stirrup Spacing	#5 at 12"	#5 at 11"	#5 at 16"	#5 at 14"
Design M_c at Base	21.667 kip-ft./ft.	25.381 kip-ft./ft.	18.642 kip-ft./ft.	22.67 kip-ft./ft.
Design L_c	12.756 ft.	14.721 ft.	14.409 ft.	16.273 ft.
Design R_w	145.656 kips	164.911 kips	146.361 kips	168.603 kips

The 42" single slope barriers are to be used when a side barrier wall is adjacent to the bridge rail, if the bridge is located on a designated bicycle route, or if the bridge is located on a limited access highway. The 36" Single Slope Barrier should be used in all other cases.

Details for the GDOT-approved 36” Height Single Slope Barrier:

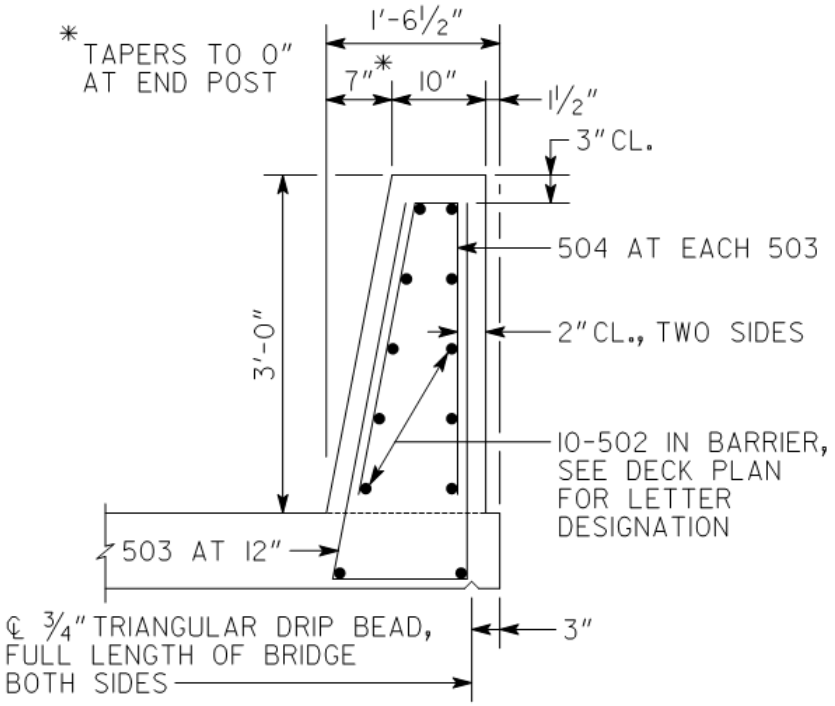

BARRIER DETAIL

Details for the GDOT-approved 42” Height Single Slope Barrier:

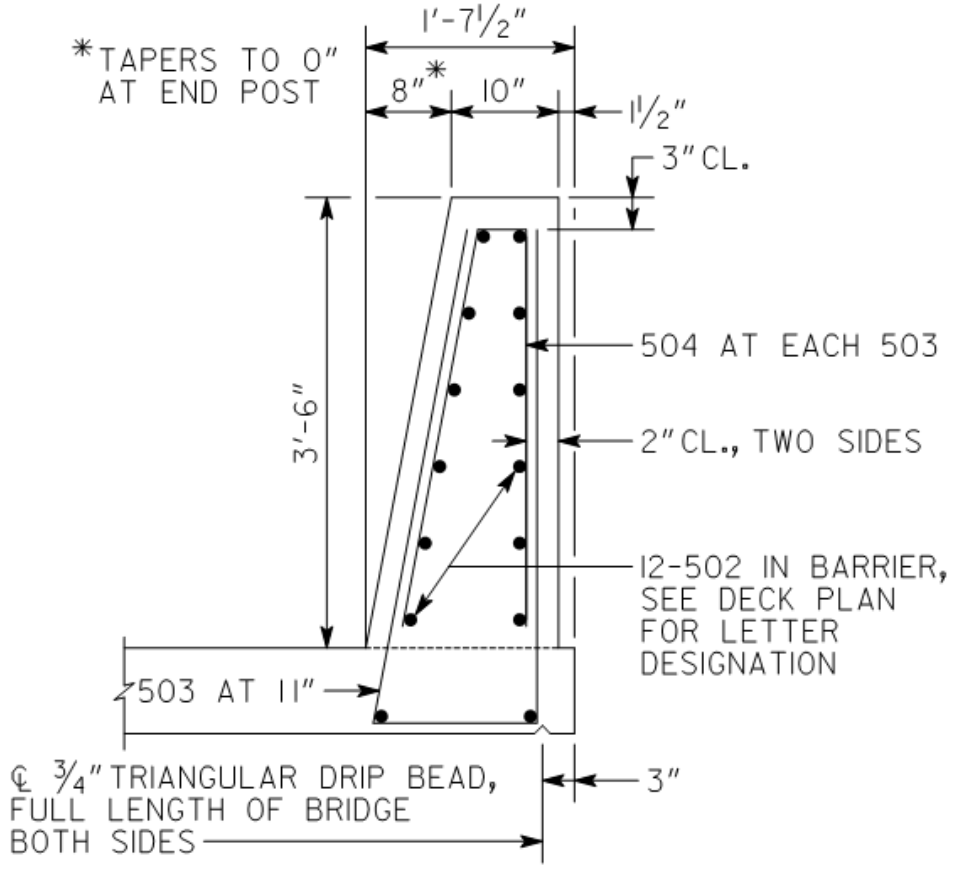

BARRIER DETAIL

Details for the GDOT-approved 36" Height Single Slope Barrier to accommodate fence installation:

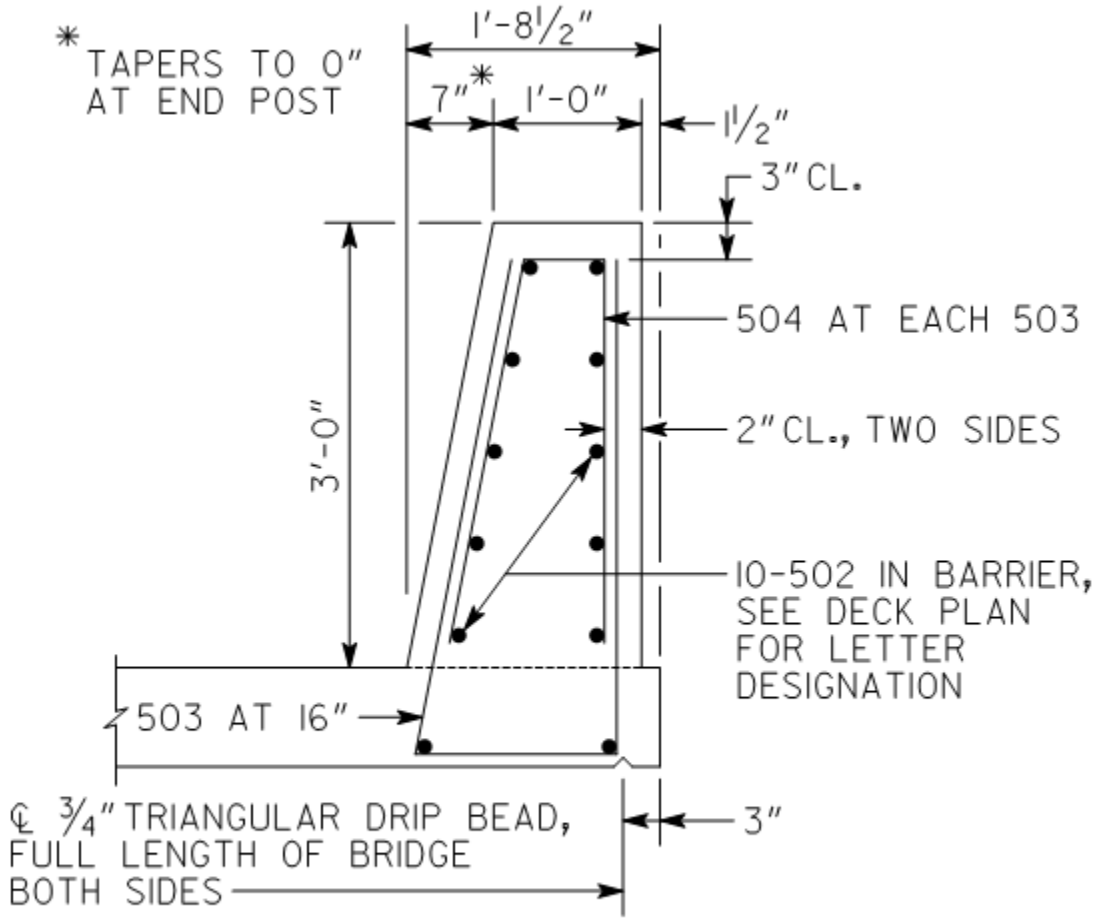

BARRIER DETAIL

Details for the GDOT-approved 42" Height Single Slope Barrier to accommodate fence installation:

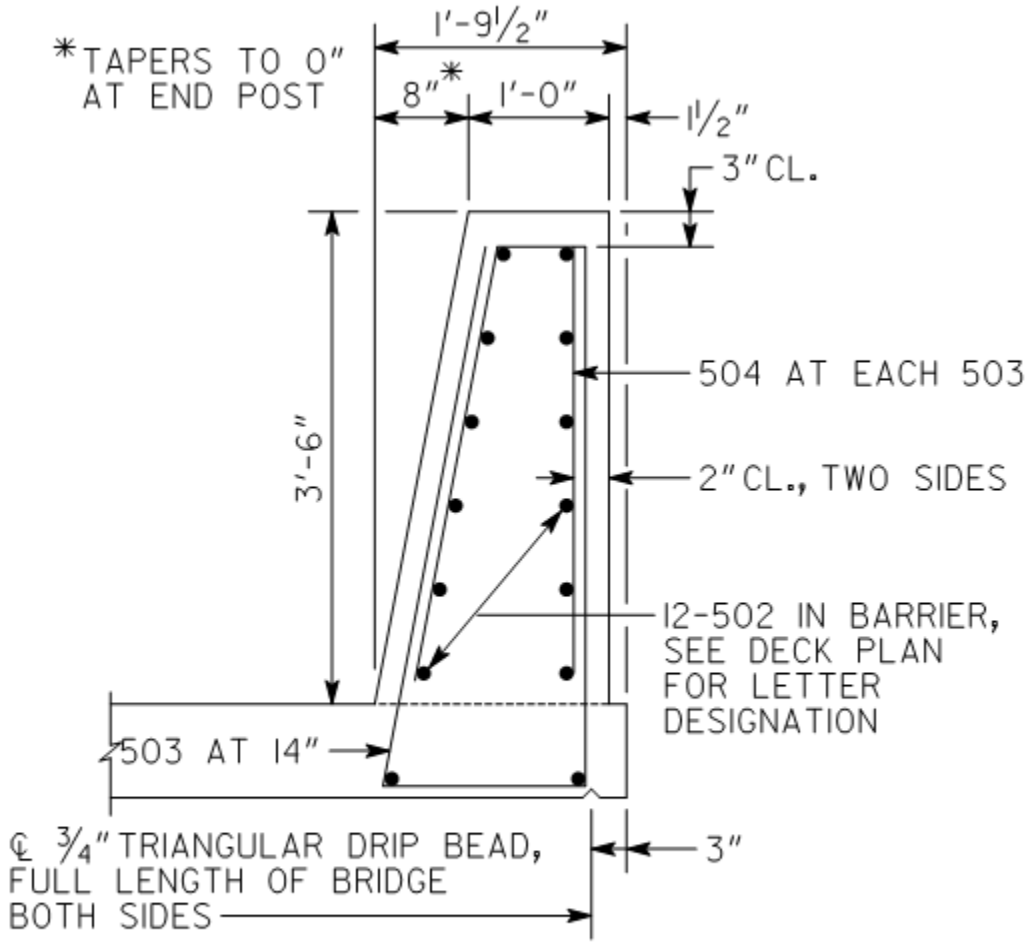

BARRIER DETAIL

Georgia Department of Transportation

Technical Provisions

For

Design-Build Agreement

P.I. No. 0010212

Attachment 13-3

Paving Rest Detail

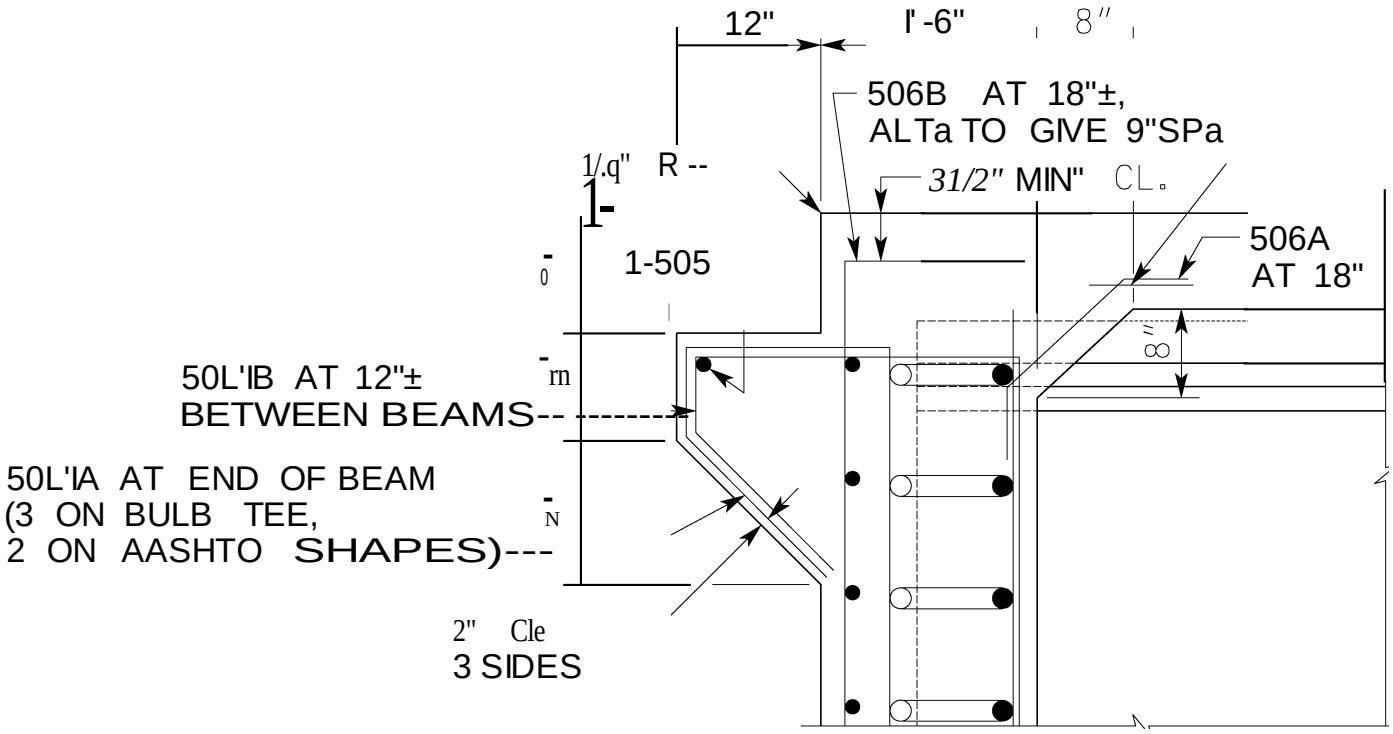

GEORGIA

DEPARTMENT OF TRANSPORTATION

ENGINEERING DIVISION-OFFICE OF BRIDGES AND STRUCTURES