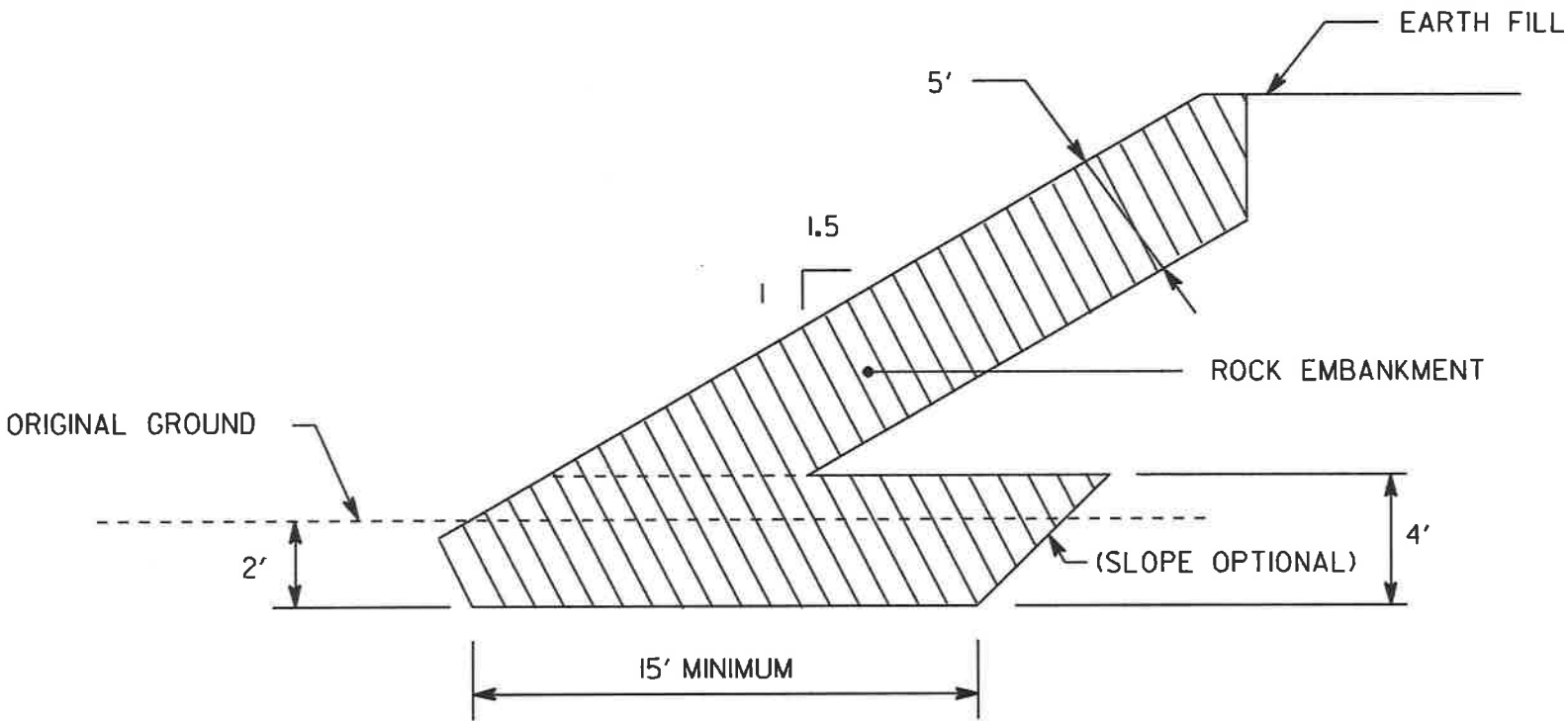

ROCK EMBANKMENT SLOPE

NO SCALE