ORIGINAL TO GENERAL FILES

DEPARTMENT OF TRANSPORTATION
STATE OF GEORGIA

OFFICE OF DESIGN POLICY & SUPPORT
INTERDEPARTMENTAL CORRESPONDENCE

FILE P.I. # 222570-
EDS00-0441-00(044)
GDOT District 2 - Tennille
Morgan County
SR 24/US 441 From The Putnam CL to N of
CR 121/Pierce Dairy Road
Reconstruction/Rehabilitation

OFFICE Design Policy & Support

DATE March 15, 2012

Kim Phillips

FROM for Brent Story, State Design Policy Engineer

TO SEE DISTRIBUTION

SUBJECT **APPROVED REVISED CONCEPT REPORT**

Attached is the approved Revised Concept Report for the above subject project.

Attachment

DISTRIBUTION:

Genetha Rice-Singleton, Program Control Administrator
Bobby Hilliard, State Program Delivery Engineer
Cindy VanDyke, State Transportation Planning Administrator
Angela Robinson, Financial Management Administrator
Glenn Bowman, State Environmental Administrator
Andy Casey, State Roadway Design Engineer
Attn: Clay Bastian, Design Group Manager
Kathy Zahul, State Traffic Engineer
Georgene Geary, State Materials & Research Engineer
Lisa Myers, State Project Review Engineer
Jeff Baker, State Utilities Engineer
Ken Thompson, Statewide Location Bureau Chief
Jimmy Smith, District Engineer
Jamie Lindsey, Acting District Preconstruction Engineer
Lynn Bean, District Utilities Engineer
David Moyer, Project Manager
BOARD MEMBER - 10th Congressional District

DEPARTMENT OF TRANSPORTATION
STATE OF GEORGIA

REVISED PROJECT CONCEPT REPORT

Project Number: EDS00-0441-00(44)
County: Morgan
P. I. Number: 222570
Federal Route Number: 441
State Route Number: 24

The median has been reduced from 44' to 32'

Submitted for approval: *(Submit to "Concept Reports" in Outlook)*

DATE 9/26/11 — C. Andy Carey
State Roadway Design Engineer

DATE 9/26/2011 — Bolly Hilliard
State Program Delivery Engineer

DATE 10/5/11 — David G. Moyer
Project Manager

Recommendation for approval:

DATE 10-20-2011 — Glenn Bowman *
State Environmental Administrator

The concept as presented herein and submitted for approval is consistent with that which is included in the Regional Transportation Program (RTP) and/or the State Transportation Improvement Program (STIP).

DATE 10-18-11 — Cindy VanDyke *
State Transportation Planning Administrator

* Recommendation on file

Project Justification Statement
Morgan County, PI # 222570
SR 24/US 441 from the Putnam Co. line to north of CR 121/Pierce Dairy Road in Morgan Co.

SR 24/US 441 between the Putnam County line and just north of CR 121/Pierce Dairy Road in Morgan County is a two lane north-south roadway functionally classified as a Rural Principal Arterial. It has a posted speed limit ranging between 45 and 55 MPH and is not listed as a designated bike route in the State Bicycle Plan. A proposed widening for this section was added to the Department's Construction Work Program by the Board in 1993. SR 24/US 441 is also identified as a Governor's Road Improvement Program (GRIP) route to address the importance of stimulating economic growth throughout the state via an improved transportation network.

Based upon traffic data information approved by the Office of Planning, the 2011 Average Annual Daily Traffic (AADT) along SR 24 in the area of this project ranges up to 13,250 AADT, which represents a level-of-service "D". Projected traffic volumes show a traffic volume up to 26,400 AADT by the design year 2040 which represents a LOS "F". LOS "D" and LOS "F" are seen as unacceptable with regards to statewide LOS performance measures as referenced in the 200 5-2035 Statewide Transportation Plan (SWTP). Analysis of the last three years of available crash data along this section of SR 24 revealed crash rates below the comparable statewide average.

To the north, the widening project ties into an existing five lane section, just north of CR 121/Pierce Dairy Road. To the south, the project ties into project # 222580, an adjacent project which also proposes to widen SR 24/US 441 to four lanes, starting at the Morgan/Putnam County Line. Project # 222580 has an existing (2010) AADT ranging up to 9,700 AADT which represents a LOS "D" and a design year (2040) AADT ranging up to 14,750 AADT, which represents a level-of-service "E". LOS "D" and LOS "E" are also seen as unacceptable with regards to statewide LOS performance measures as referenced in the 2005-2035 Statewide Transportation Plan (SWTP). Projects # 222570 and 222580 are combined in one environmental document.

Based on this information, the proposed limits accommodate the primary purpose of this project which is to address current and future capacity deficiencies along the corridor in addition to fulfilling the implementation of the GRIP corridor system.

Project location: The project begins at the Putnam-Morgan County line and extends north 8.1 miles, approximately 250 feet north of Pierce Dairy Road (CR121), approximately 1,000 feet before the intersection with I-20.

Description of the approved concept: Project EDS00-0441-00(44) proposes to widen the existing US 441/SR 24 roadway from 2 and 3 lanes to 4 lanes with a 44 foot grassed median and 4 lanes with a 14 foot flush median. The project begins at the Putnam/Morgan County line by widening to the west of the existing roadway. The alignment shifts east of the existing roadway, avoiding a historic site bordering the western existing edge of pavement just north of CR 126/Halls Lane. Approximately 0.3 miles north of CR 126/Halls Lane, the concept shifts to hold the existing west side right of way. This concept continues to approximately CR 125/Ponder Pines Road, where the project shifts to hold the existing edge of pavement and widen to the east. This concept continues to approximately 0.7 miles north of CR 125/Ponder Pines Road, where the project again shifts to hold the existing western right of way. The project continues holding the existing western right of way to approximately 0.5 miles north of CR 251/Seven Islands Road, where the concept shifts to hold to the existing eastern right of way in order to avoid a historic site on the east side of US 441/SR 24. Just north of CR 123/Maddox Road, the project shifts to widen to the east of US 441/SR 24, holding the existing west edge of pavement. This concept continues to approximately 1 mile north of CR 123/Maddox Road, where the project shifts to hold the eastern edge of pavement and widen to the west in order to minimize residential impacts. At approximately Crawford Road, the project shifts to widen to the east, holding the existing west side right of way. The project keeps the same concept until CR 204/Hill Top Road, where the alignment begins shifting to the west side of US 441/SR 24. Approximately 0.6 miles north of CR117/Mission Road, the media begins tapering to a 14 foot flush median and ties into the existing five lane section. The project ends just north of CR 121/Pierce Dairy Road. The total project length is approximately 8.1 miles. Proposed right-of-way varies from approximately 100 to 250 feet.

PDP Classification: Major X Minor

Federal Oversight: Full Oversight ( ), Exempt (X), State Funded ( ), or Other ( )

Functional Classification: Rural Principal Arterial

U. S. Route Number(s): US 441 **State Route Number(s): SR24**

Traffic (AADT) as shown in the approved concept:
Base Year: 23,800 (2001) Design Year: 40,450 (2021)

Updated traffic data (AADT):
Base Year: 16,450 (2020) Design Year: 26,400 (2040)

Approved/Programmed Schedule:
P.E.: 2002 R/W: 2013 Construction: 2016

VE Study Required **Yes (X) VE study held on 09/07** **No ( )**

Is the project located in an Ozone Non-attainment area? **Yes ( )** **No (X)**

Is the project in a PM2.5 Non-Attainment area? **Yes ( )** **No (X)**

Approved Features: Typical Section	**Proposed Features:**
• This project proposes to widen the existing roadway from 2 and 3 lanes to 4 with a 44' grassed median and a 14' flush median.	The 44' grassed median will be revised to a 32' grassed median.
Reason for Change: The change is needed based on the VE Implementation letter dated April 17, 2008, to reduce the ROW impacts.	

Potential Environmental Impacts of Proposed Revision:
No anticipated environmental effects.

Have Proposed Revisions Been Reviewed by Environmental Staff? (X) Yes ( ) No

Updated Cost Estimate	
Base Construction Cost	$24,763,165.69
Engineering and Inspection	$1,238,158.28
Fuel & Asphalt Adjustment	$3,334,247.29
Total Construction Cost	$29,335,571.26
Right-of-Way	$9,410,000.00
Utilities (reimbursable)	$0*
Environmental Mitigation	$1,500.00

*The reimbursable amount could increase to $568,975.00 if the City of Madison was to apply for utility assistance for the relocation of their facilities.

Recommendation: Recommend that the proposed revision to the concept be approved for implementation.

Attachments:

1. Sketch Map
2. Cost Estimate
   - Preliminary Utility Cost Estimate
   - Preliminary Right-of-Way Cost Estimate
   - Estimated Environmental Mitigation Costs (email)
   - Detail Cost Estimates (CES)
3. Construction Costs/Liquid AC Adjustments
4. Highway safety manual analysis for concept reports/revised concept reports
5. Traffic diagrams
6. VE Implementation letter
7. Typical Sections

Exempt projects

Concur: _____
Director of Engineering

Approve: _____ Date: 3/12/12
Chief Engineer

Attachment 1
P.I. Number: 222570
County: Morgan

LOCATION SKETCH

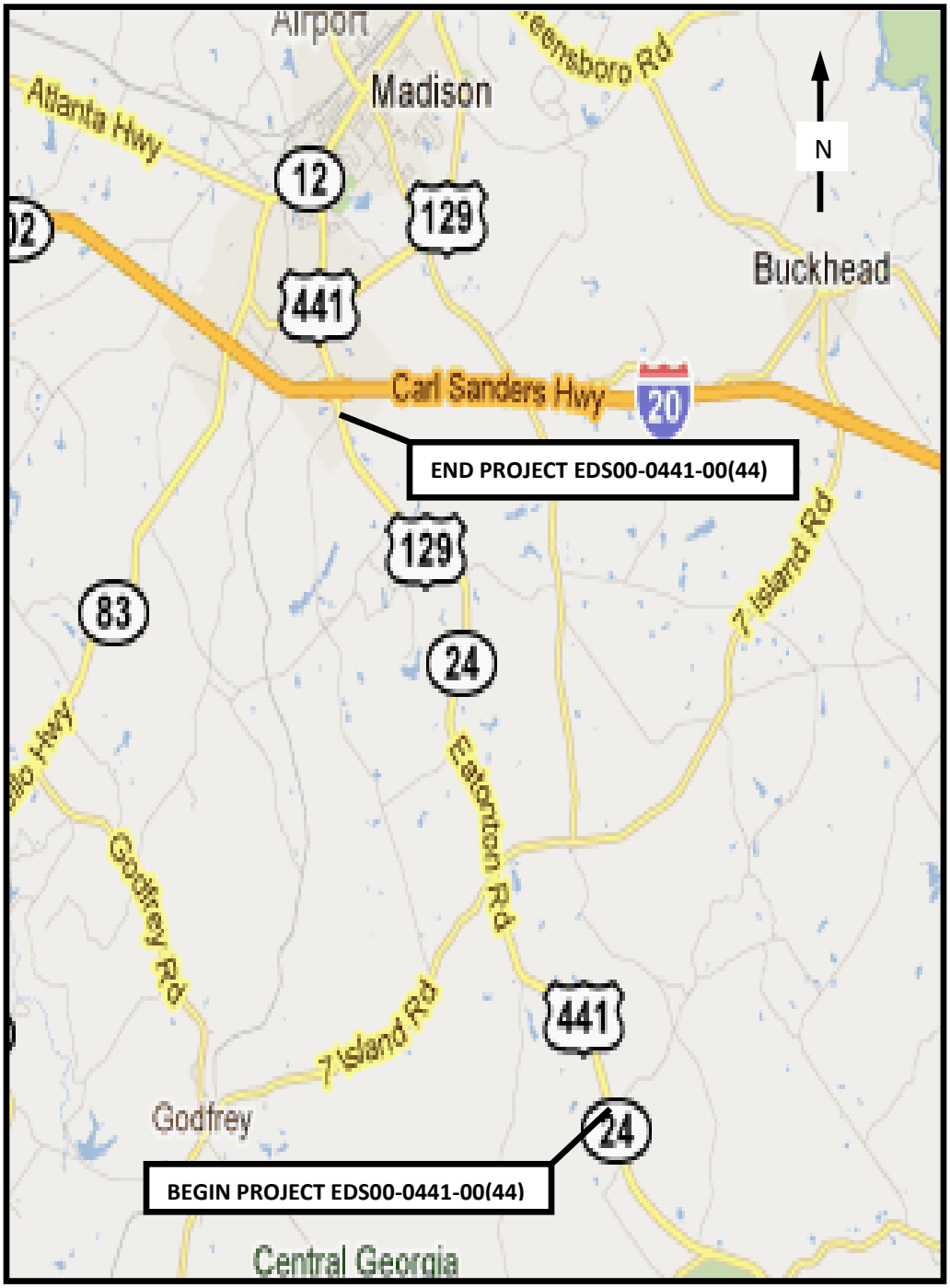

DEPARTMENT OF TRANSPORTATION
STATE OF GEORGIA

INTERDEPARTMENT CORRESPONDENCE

FILE EDS00-0441-00(044) Morgan County
P.I. No. 222570

OFFICE Tennille

DATE September 27, 2011

FROM Jamie Lindsey
Assistant District Utilities Engineer

TO Bobby Hilliard, P. E., Office of Program Delivery
ATTN David Moyer, Project Manager

SUBJECT PRELIMINARY UTILITY COST (ESTIMATE) -

As requested by your office, we are furnishing you with a Preliminary Utility Cost estimates for each utility with facilities potentially located within the project limits.

FACILITY OWNER	NON-REIMBURSABLE	REIMBURSABLE
GEORGIA POWER (DIST)	$ 158,500.00	
CENTRAL GEORGIA EMC	$ 290,000.00	
AT&T	$ 125,000.00	
COMMUNICOMM SERVICES, INCORPORATED	$ 110,000.00	
CITY OF MADISON WATER	$ 479,765.00	
CITY OF MADISON SEWER	$ 74,160.00	
CITY OF MADISON GAS	$ 15,050.00	
Totals	$1,252,475.00	

Total Reimbursement Cost:

*The reimbursable amount could increase to $568,975.00 if the City of Madison was to apply for utility assistance for the relocation of their facilities.

If you have any questions, please contact Jeanie Wheeler at 478-552-4638.

JL/JEW

C: Jeff Baker, State Utilities Engineer;
Jamie Simpson, Office of Financial Management;
Robert L. Moon, Assistant Area Engineer

Preliminary Right of Way Cost Estimate

Phil Copeland
Right of Way Administrator
By: LaShone Alexander

Date: June 8, 2011
Project: EDS00-441-00 (44) Morgan UPDATE
Existing/Required R/W: Varies/Varies
Project Termini : US 129/441/SR 24 Improvements
Project Description: US 129/441 widening project

P.I. Number: 222570
No. Parcels: 128

Land:

Commercial			
5.25 Acres @ $50,000/ ac.	=	$ 262,500	
Residential			
88.40 Acres @ $9,500	=	$ 839,800	
Permanent Easement			
2.14 Acres @ $ 9,500 X 50%	=	$ 10,165	
Agriculture			
56.33 Acres @ $ 4,700/ ac.	=	$ 264,751	
Permanent Easement			
5.09 Acres @ $ 4,700 X 50%	=	$ 11,961	
			$ 1,389,177

Improvements :

Residences, Building landscape, misc.		$ 1,600,000

Relocation:

3 Commercial @ $ 25,000 =	$ 75,000	
12 Residential @ $ 40,000=	$ 480,000	
		$ 555,000

Damage :

17 Proximity	$ 250,000	
0 Cost to Cure	$ 0	
0 Consequential	$ 0	
		$ 250,000

			$ 3,794,177
Net Cost		$ 3,794,177	
Scheduling Contingency	55 %	$ 2,086,797	
Adm/Court Cost	60	$ 3,528,584	
		$ 9,409,558	

Total Cost $ 9,410,000

Note: The Market Appreciation (40%) is not included in this updated Preliminary Cost Estimate.

Note: Accuracy of estimate is sole responsibility of preparer.

From: Westberry, Lisa
To: Moyer, David
Cc: Bastian, Clay; Hughes, Taylor; Gavins, Marvin
Subject: RE: P.I. #222570/3222580, Putnam/Morgan Counties - Request for Estimated Mitigation Costs
Date: Tuesday, January 31, 2012 8:28:24 AM

David,

After going back and looking at the impacts once again, here is the breakdown for each unit:

PI 222570 = $1500.00
PI 222580 = $16,500.00

I realize this doesn't add up to $100,000 that I originally quoted you, but this is a somewhat a more accurate estimate.

If there are any other questions, please let me know.

Thank you,
Lisa Westberry
Georgia Department of Transportation
600 West Peachtree Street, NW, Atlanta, GA 30308
404-631-1772

From: Moyer, David
Sent: Thursday, January 26, 2012 11:15 AM
To: Westberry, Lisa
Cc: Bastian, Clay; Hughes, Taylor; Gavins, Marvin
Subject: RE: P.I. #222570/3222580, Putnam/Morgan Counties - Request for Estimated Mitigation Costs

Lisa

Can you break this down into the separate projects? We have to submit two separate concept reports and I am not sure if this will be an equal split.

Thank You

David G. Moyer, P.E.
Associate Project Manager
Georgia Department of Transportation
Office of Program Delivery
600 West Peachtree Street
25th Floor
Atlanta, GA 30308
404-291-5880

From: Westberry, Lisa

Sent: Thursday, January 26, 2012 8:48 AM
To: Moyer, David
Cc: Pugh, Samuel; Hester, Michael
Subject: P.I. #222570/3222580, Putnam/Morgan Counties - Request for Estimated Mitigation Costs

David,

The estimated mitigation costs for the subject project will be $100,000. This estimate takes into account the impacts as currently noted in the draft environmental document. If you have questions or need further information, please let me know.

Thank you.

Lisa Westberry
Georgia Department of Transportation
600 West Peachtree Street, NW, Atlanta, GA 30308
404-631-1772

Processed Date: 11/14/11

DETAILED COST ESTIMATE

Georgia Department of Transportation

Job: 222570

JOB NUMBER: *222570* **FED/STATE PROJECT NUMBER** *EDS00-0441-00(44)*

SPEC YEAR: *01*

DESCRIPTION: *SR 24/US 441 FM THE PUTNAM CL TO N OF CR 121 PIERCE RD.*

ITEMS FOR JOB 222570

1 - DRAINAGE

.ine Numbe	ITEM	QUANTITY	UNITS	PRICE	DESCRIPTION	AMOUNT
0283	436-1000	5330.000	LF	$6.50	ASPH CONC CURB - VARIOUS STATIONS	$34,645.00
0258	441-0301	27.000	EA	$1,800.00	CONC SPILLWAY, TP 1	$48,600.00
0193	441-0600	28.000	CY	$950.00	CONC HEADWALLS	$26,600.00
0173	500-3101	96.000	CY	$444.58	CLASS A CONCRETE	$42,679.43
0263	500-3200	47.000	CY	$363.24	CL B CONC	$17,072.11
0168	511-1000	6227.000	LB	$0.90	BAR REINF STEEL	$5,604.30
0025	550-1180	7252.000	LF	$33.00	STM DR PIPE 18",H 1-10	$239,316.00
0213	550-1240	1512.000	LF	$42.00	STM DR PIPE 24",H 1-10	$63,504.00
0268	550-1300	460.000	LF	$53.00	STM DR PIPE 30",H 1-10	$24,380.00
0198	550-1360	1750.000	LF	$55.00	STM DR PIPE 36",H 1-10	$96,250.00
0009	550-2180	3465.000	LF	$20.74	SIDE DR PIPE 18",H 1-10	$71,879.42
0183	550-2240	760.000	LF	$24.21	SIDE DR PIPE 24",H 1-10	$18,396.26
0203	550-2300	110.000	LF	$40.41	SIDE DR PIPE 30",H 1-10	$4,445.46
0208	550-3330	27.000	EA	$1,433.99	SAFETY END SECTION 30",STD,4:1	$38,717.71
0238	550-3418	3.000	EA	$462.51	SAFETY END SECTION 18",SD,4:1	$1,387.54
0010	550-3518	108.000	EA	$600.87	SAFETY END SECTION 18",STD,6:1	$64,893.63
0188	550-3624	70.000	EA	$815.53	SAFETY END SECTION 24",SD,6:1	$57,086.76
0273	550-4118	2.000	EA	$371.58	FLARED END SECT 18 IN, SIDE DR	$743.15
0233	550-4124	4.000	EA	$502.78	FLARED END SECT 24 IN, SIDE DR	$2,011.10
0015	550-4218	65.000	EA	$458.13	FLARED END SECT 18 IN, ST DR	$29,778.60
0158	550-4242	1.000	EA	$1,517.33	FLARED END SECT 42 IN, ST DR	$1,517.33
0313	668-1100	11.000	EA	$1,945.29	CATCH BASIN, GP 1	$21,398.19
0030	668-2100	85.000	EA	$1,774.93	DROP INLET, GP 1	$150,869.24
0223	668-2110	20.000	LF	$119.96	DROP INLET, GP 1, ADDL DEPTH	$2,399.19
0228	668-2200	1.000	EA	$2,405.44	DROP INLET, GP 2	$2,405.44
0318	668-5000	1.000	EA	$1,725.38	JUNCTION BOX	$1,725.38
0218	668-8011	237.000	SF	$50.57	SAFETY GRATE, TP 1	$11,984.54
0288	668-8012	24.000	SF	$49.00	SAFETY GRATE, TP 2	$1,176.08
0163	668-8013	505.000	SF	$47.97	SAFETY GRATE, TP 3	$24,226.48
0278	668-8014	128.000	SF	$50.45	SAFETY GRATE, TP 4	$6,457.60
					SUBTOTAL FOR DRAINAGE:	**$1,112,149.94**

2 - ROADWAY

.ine Numbe	ITEM	QUANTITY	UNITS	PRICE	DESCRIPTION	AMOUNT
0393	201-1500	1.000	LS	$1,898,100.00	CLEARING & GRUBBING - WHOLE PROJECT	$1,898,100.00
0453	205-0001	295401.000	CY	$4.55	UNCLASS EXCAV	$1,344,074.55
0458	206-0002	259464.000	CY	$3.95	BORROW EXCAV, INCL MATL	$1,024,882.80
0513	310-1101	219913.000	TN	$17.15	GR AGGR BASE CRS, INCL MATL	$3,771,507.95
0503	402-3121	125035.000	TN	$62.00	RECYL AC 25MM SP,GP1/2,BM&HL	$7,752,170.00
0493	402-3130	28258.900	TN	$68.00	RECYL AC 12.5MM SP,GP2,BM&HL	$1,921,605.20
0498	402-3190	37679.000	TN	$65.00	RECYL AC 19 MM SP,GP 1 OR 2 ,INC BM&HL	$2,449,135.00
0508	413-1000	45544.000	GL	$2.65	BITUM TACK COAT	$120,691.60
0020	441-0016	386.000	SY	$35.00	DRIVEWAY CONCRETE, 6 IN TK	$13,510.00
0308	441-0104	2886.000	SY	$25.00	CONC SIDEWALK, 4 IN	$72,150.00
0303	441-0756	2761.000	SY	$35.51	CONC MEDIAN, 8 IN	$98,052.58
0178	441-3999	12430.000	LF	$16.00	CONCRETE V GUTTER	$198,880.00
0518	441-4030	900.000	SY	$32.95	CONC VALLEY GUTTER, 8 IN	$29,652.41
0293	441-6222	2325.000	LF	$12.59	CONC CURB & GUTTER/ 8"X30"TP2	$29,268.45
0298	441-6740	2765.000	LF	$12.41	CONC CURB & GUTTER/ 8"X30" TP7	$34,302.76
0243	641-1200	6430.000	LF	$13.51	GUARDRAIL, TP W	$86,897.85
0248	641-5001	11.000	EA	$632.41	GUARDRAIL ANCHORAGE, TP 1	$6,956.55
0253	641-5012	13.000	EA	$1,658.57	GUARDRAIL ANCHORAGE, TP 12	$21,561.46
					SUBTOTAL FOR ROADWAY:	**$20,873,399.16**

File Location: Div of Preconstruction > CES

CONFIDENTIALITY NOTICE: This document may contain confidential and/or privileged information. Any unauthorized duplication, disclosure, distribution/ retransmission or taking of any action in reliance upon the material in this document is strictly forbidden.

DETAILED COST ESTIMATE

Georgia Department of Transportation

Job: 222570

3 - STAGING

Line Numbe	ITEM	QUANTITY	UNITS	PRICE	DESCRIPTION	AMOUNT
0523	620-0100	200.000	LF	$31.32	TEMP BARRIER, METHOD NO. 1	$6,264.43
					SUBTOTAL FOR STAGING:	**$6,264.43**

4 - EROSION CONTROL

Line Numbe	ITEM	QUANTITY	UNITS	PRICE	DESCRIPTION	AMOUNT
0398	163-0232	88.000	AC	$600.00	TEMPORARY GRASSING	$52,800.00
0403	163-0240	3249.000	TN	$250.00	MULCH	$812,250.00
0323	163-0300	4.000	EA	$1,800.00	CONSTRUCTION EXIT	$7,200.00
0478	163-0503	25.000	EA	$500.00	CONSTR AND REMOVE SILT CONTROL GATE,TP 3	$12,500.00
0418	163-0520	200.000	LF	$15.00	CONSTR AND REMOVE TEMP PIPE SLOPE DRAIN	$3,000.00
0468	163-0527	20.000	EA	$240.00	CNST/REM RIP RAP CKDM,STN P RIPRAP/SN BG	$4,800.00
0333	163-0528	7550.000	LF	$3.20	CONSTR AND REM FAB CK DAM -TP C SLT FN	$24,160.00
0041	163-0531	1.000	EA	$8,000.00	CONSTR & REM SEDIMENT BASIN,TP 1,STA NO- 118+00.00	$8,000.00
0046	163-0531	1.000	EA	$8,000.00	CONSTR & REM SEDIMENT BASIN,TP 1,STA NO- 164+00.00	$8,000.00
0051	163-0531	1.000	EA	$8,000.00	CONSTR & REM SEDIMENT BASIN,TP 1,STA NO- 175+00.00	$8,000.00
0056	163-0531	1.000	EA	$8,000.00	CONSTR & REM SEDIMENT BASIN,TP 1,STA NO- 181+50.00	$8,000.00
0057	163-0531	1.000	EA	$8,000.00	CONSTR & REM SEDIMENT BASIN,TP 1,STA NO- 206+00.00	$8,000.00
0058	163-0531	1.000	EA	$8,000.00	CONSTR & REM SEDIMENT BASIN,TP 1,STA NO- 211+00.00	$8,000.00
0063	163-0531	1.000	EA	$8,000.00	CONSTR & REM SEDIMENT BASIN,TP 1,STA NO- 229+00.00	$8,000.00
0068	163-0531	1.000	EA	$8,000.00	CONSTR & REM SEDIMENT BASIN,TP 1,STA NO- 234+50.00	$8,000.00
0073	163-0531	1.000	EA	$8,000.00	CONSTR & REM SEDIMENT BASIN,TP 1,STA NO- 247+50.00	$8,000.00
0078	163-0531	1.000	EA	$8,000.00	CONSTR & REM SEDIMENT BASIN,TP 1,STA NO- 263+00.00	$8,000.00
0083	163-0531	1.000	EA	$8,000.00	CONSTR & REM SEDIMENT BASIN,TP 1,STA NO- 286+00.00	$8,000.00
0088	163-0531	1.000	EA	$8,000.00	CONSTR & REM SEDIMENT BASIN,TP 1,STA NO- 310+00.00	$8,000.00
0093	163-0531	1.000	EA	$8,000.00	CONSTR & REM SEDIMENT BASIN,TP 1,STA NO- 315+00.00	$8,000.00
0098	163-0531	1.000	EA	$8,000.00	CONSTR & REM SEDIMENT BASIN,TP 1,STA NO- 335+00.00	$8,000.00
0103	163-0531	1.000	EA	$8,000.00	CONSTR & REM SEDIMENT BASIN,TP 1,STA NO- 342+00.00	$8,000.00
0108	163-0531	1.000	EA	$8,000.00	CONSTR & REM SEDIMENT BASIN,TP 1,STA NO- 351+50.00	$8,000.00
0113	163-0531	1.000	EA	$8,000.00	CONSTR & REM SEDIMENT BASIN,TP 1,STA NO- 359+00.00	$8,000.00
0118	163-0531	1.000	EA	$8,000.00	CONSTR & REM SEDIMENT BASIN,TP 1,STA NO- 384+00.00	$8,000.00
0123	163-0531	1.000	EA	$8,000.00	CONSTR & REM SEDIMENT BASIN,TP 1,STA NO- 425+00.00	$8,000.00
0128	163-0531	1.000	EA	$8,000.00	CONSTR & REM SEDIMENT BASIN,TP 1,STA NO- 484+00.00	$8,000.00
0133	163-0531	1.000	EA	$8,000.00	CONSTR & REM SEDIMENT BASIN,TP 1,STA NO- 491+00.00	$8,000.00
0138	163-0531	1.000	EA	$8,000.00	CONSTR & REM SEDIMENT BASIN,TP 1,STA NO- 511+00.00	$8,000.00
0338	163-0541	50.000	EA	$640.00	CONSTR & REM ROCK FILTER DAMS	$32,000.00
0343	163-0542	5.000	EA	$380.00	CONSTR & REM STONE FILTER RING	$1,900.00
0408	163-0543	200.000	LF	$30.00	CONSTR & REM STONE FILTER BERM	$6,000.00
0348	163-0550	75.000	EA	$200.00	CONS & REM INLET SEDIMENT TRAP	$15,000.00
0353	165-0010	20000.000	LF	$1.25	MAINT OF TEMP SILT FENCE, TP A	$25,000.00
0358	165-0030	95250.000	LF	$1.50	MAINT OF TEMP SILT FENCE, TP C	$142,875.00
0363	165-0041	8150.000	LF	$2.50	MAINT OF CHECK DAMS - ALL TYPES	$20,375.00
0040	165-0060	22.000	EA	$1,500.00	MAINT OF TEMP SEDIMENT BASIN,STA NO -	$33,000.00
0473	165-0087	75.000	EA	$205.00	MAINT OF SILT CONTROL GATE, TP 3	$15,375.00
0368	165-0101	4.000	EA	$700.00	MAINT OF CONST EXIT	$2,800.00
0373	165-0105	75.000	EA	$110.00	MAINT OF INLET SEDIMENT TRAP	$8,250.00
0463	165-0110	50.000	EA	$205.00	MAINT OF ROCK FILTER DAM	$10,250.00
0378	165-0111	5.000	EA	$140.00	MAINT OF STONE FILTER RING	$700.00
0413	165-0112	200.000	LF	$5.25	MAINT OF STONE FILTER BERM	$1,050.00
0383	167-1000	10.000	EA	$1,500.00	WATER QUALITY MONITORING AND SAMPLING	$15,000.00
0388	167-1500	24.000	MO	$1,000.00	WATER QUALITY INSPECTIONS	$24,000.00
0423	171-0010	20000.000	LF	$2.35	TEMPORARY SILT FENCE, TYPE A	$47,000.00
0428	171-0030	95250.000	LF	$4.00	TEMPORARY SILT FENCE, TYPE C	$381,000.00
0153	550-1420	550.000	LF	$68.62	STM DR PIPE 42",H 1-10	$37,738.84
0538	603-2024	500.000	SY	$37.28	STN DUMPED RIP RAP, TP 1, 24"	$18,641.64
0543	603-7000	500.000	SY	$3.70	PLASTIC FILTER FABRIC	$1,848.75
0328	643-8200	2000.000	LF	$1.63	BARRIER FENCE (ORANGE), 4 FT	$3,267.10
0443	700-6910	175.000	AC	$1,000.00	PERMANENT GRASSING	$175,000.00
0448	700-7000	1620.000	TN	$65.00	AGRICULTURAL LIME	$105,300.00
0433	700-8000	123.000	TN	$350.00	FERTILIZER MIXED GRADE	$43,050.00
0438	700-8100	8750.000	LB	$2.30	FERTILIZER NITROGEN CONTENT	$20,125.00
0488	716-1000	10000.000	SY	$2.20	EROSION CONTROL MATS,WATERWAYS	$22,000.00
0483	716-2000	50000.000	SY	$1.24	EROSION CONTROL MATS, SLOPES	$62,000.00
					SUBTOTAL FOR EROSION CONTROL:	**$2,363,256.33**

CONFIDENTIALITY NOTICE: This document may contain confidential and/or privileged information. Any unauthorized duplication, disclosure, distribution/ retransmission or taking of any action in reliance upon the material in this document is strictly forbidden.

DETAILED COST ESTIMATE

Georgia Department of Transportation

Job: 222570

5 - MISC.

Line Numbe	ITEM	QUANTITY	UNITS	PRICE	DESCRIPTION	AMOUNT
0527	150-1000	1.000	LS	$165,350.00	TRAFFIC CONTROL - WHOLE PROJECT	$165,350.00
0035	634-1200	290.000	EA	$115.00	RIGHT OF WAY MARKERS	$33,350.00
0528	643-8000	2.000	EA	$616.09	GATE, FIELD FENCE - VARIOUS STATIONS	$1,232.18
					SUBTOTAL FOR MISC.:	**$199,932.18**

6 - SIGNAL AND MARKING

Line Numbe	ITEM	QUANTITY	UNITS	PRICE	DESCRIPTION	AMOUNT
0548	636-1020	210.000	SF	$17.00	HWY SGN,TP1MAT,REFL SH TP3	$3,570.00
0568	636-1029	70.000	SF	$14.59	HWY SGN,TP2 MATL,REFL SH TP 3	$1,021.16
0553	636-1033	420.000	SF	$22.00	HWY SIGNS, TP1MAT,REFL SH TP 9	$9,240.00
0563	636-1041	140.000	SF	$29.36	HWY SIGNS,TP 2MAT,REFL SH TP 9	$4,110.79
0558	636-2070	1800.000	LF	$9.00	GALV STEEL POSTS, TP 7	$16,200.00
0533	647-1000	1.000	LS	$60,000.00	TRAF SIGNAL INSTALLATION NO - WHOLE PROJECT	$60,000.00
0573	653-0110	10.000	EA	$71.87	THERM PVMT MARK, ARROW, TP 1	$718.70
0578	653-0120	10.000	EA	$74.68	THERM PVMT MARK, ARROW, TP 2	$746.77
0593	653-0150	10.000	EA	$124.96	THERM PVMT MARK, ARROW, TP 5	$1,249.55
0588	653-0160	10.000	EA	$137.97	THERM PVMT MARK, ARROW, TP 6	$1,379.73
0583	653-0170	10.000	EA	$85.48	THERM PVMT MARK, ARROW, TP 7	$854.82
0618	653-0210	40.000	EA	$97.02	THERM PVMT MARK, WORD , TP 1	$3,880.87
0598	653-1501	100000.000	LF	$0.23	THERMO SOLID TRAF ST 5 IN, WHI	$23,065.00
0603	653-1502	100000.000	LF	$0.21	THERMO SOLID TRAF ST, 5 IN YEL	$20,556.00
0608	653-3501	86000.000	GLF	$0.22	THERMO SKIP TRAF ST, 5 IN, WHI	$18,769.50
0613	653-6004	16000.000	SY	$2.37	THERM TRAF STRIPING, WHITE	$37,963.84
0623	654-1003	1400.000	EA	$3.45	RAISED PVMT MARKERS TP 3	$4,836.92
					SUBTOTAL FOR SIGNAL AND MARKING:	**$208,163.65**

TOTALS FOR JOB 222570

ITEMS COST:	**$24,763,165.69**
COST GROUP COST:	**$0.00**
ESTIMATED COST:	**$24,763,165.69**
CONTINGENCY PERCENT:	**0.00**
ENGINEERING AND INSPECTION:	**0.00**
ESTIMATED COST WITH CONTINGENCY AND E&I:	**$24,763,165.69**

CONFIDENTIALITY NOTICE: This document may contain confidential and/or privileged information. Any unauthorized duplication, disclosure, distribution/ retransmission or taking of any action in reliance upon the material in this document is strictly forbidden.

ATTACHMENT 3

PROJ. NO.: EDS00-0441-00(44)

P.I. NO. 222570

DATE: 9/14/2011

Base Construction Cost		$	24,763,165.69
E & I	5%	$	1,238,158.28
Subtotal Construction Cost		$	26,001,323.97
Liquid AC Adjustment (60 % cap)		$	3,334,247.29
Total Construction Cost		$	29,335,571.26

PROJ. NO.	EDS00-0441-00(44)
P.I. NO.	222570
DATE	9/14/2011

ATTACHMENT 3

INDEX (TYPE)	**DATE**	**INDEX**
REG. UNLEADED	Sep-11	$ 3.582
DIESEL		$ 3.873
LIQUID AC		$ 570.00

Link to Fuel and AC Index:
http://www.dot.ga.gov/doingbusiness/Materials/Pages/asphaltcementindex.aspx

LIQUID AC ADJUSTMENTS

PA=[((APM-APL)/APL)]xTMTxAPL

Asphalt

Price Adjustment (PA)			**3267346.59**	**$**	**3,267,346.59**
Monthly Asphalt Cement Price month placed (APM)	Max. Cap	60%	$ 912.00		
Monthly Asphalt Cement Price month project let (APL)			$ 570.00		
Total Monthly Tonnage of asphalt cement (TMT)			9553.645		

ASPHALT	**Tons**	**%AC**	**AC ton**
Leveling	100	5.0%	5
12.5 OGFC		5.0%	0
12.5 mm	28258.9	5.0%	1412.945
9.5 mm SP		5.0%	0
25 mm SP	125035	5.0%	6251.75
19 mm SP	37679	5.0%	1883.95
	191072.9		**9553.645**

BITUMINOUS TACK COAT

Price Adjustment (PA)			**$ 66,900.70**	**$**	**66,900.70**
Monthly Asphalt Cement Price month placed (APM)	Max. Cap	60%	$ 912.00		
Monthly Asphalt Cement Price month project let (APL)			$ 570.00		
Total Monthly Tonnage of asphalt cement (TMT)			195.6160764		

Bitum Tack Gals	gals/ton	tons
45544	232.8234	195.616076

PROJ. NO.	EDS00-0441-00(44)					**ATTACHMENT 3**	
P.I. NO.	222570						
DATE	9/14/2011						

BITUMINOUS TACK COAT (surface treatment)

Price Adjustment (PA)				**0**	**$ -**
Monthly Asphalt Cement Price month placed (APM)	Max. Cap	60%	$	912.00	
Monthly Asphalt Cement Price month project let (APL)			$	570.00	
Total Monthly Tonnage of asphalt cement (TMT)				0	

Bitum Tack	SY	Gals/SY	Gals	gals/ton	tons
Single Surf. Trmt.		0.20	0	232.8234	0
Double Surf.Trmt.		0.44	0	232.8234	0
Triple Surf. Trmt		0.71	0	232.8234	0
					0

TOTAL LIQUID AC ADJUSTMENT	**$**	**3,334,247.29**

HIGHWAY SAFETY MANUAL (HSM) ANALYSIS for CONCEPT REPORTS/REVISED CONCEPT REPORTS

This Concept Report/Revised Concept includes an HSM predicted average crash frequency analysis for the design year ADT using the Manual's Predictive Method. The Predictive Method analysis is based on Safety Performance Functions (SPF) for individual roadway segments and intersections that provide the crash frequency. The HSM often provides information on crash frequency distribution by collision type and severity. Some SPFs include HSM Crash Modification Factors (CMF) that adjust the SPF crash frequency to account for difference between HSM base conditions and project specific conditions such as geometric design features. The HSM includes local calibration factors to further refine predictive average crash frequency. These local factors have not yet been developed by GDOT.

Project Segment and Intersection Types analyzed

Segment				Intersection	
ID #	**Type**	**Sta. Begin**	**Sta. End**	**ID #**	**Type**
1	4-Lane Divided Rural	99+50.00	137+53.51	1	3 Leg Minor Rd Stop Control-Rural Multilane
2	4-Lane Divided Rurial	137+53.51	188+20.67	2	3 Leg Minor Rd Stop Control-Rural Multilane
3	4-Lane Divided Rurial	188+20.67	243+50.87	3	4 Leg Minor Rd Stop Control-Rural Multilane
4	4-Lane Divided Rural	243+50.87	313+59.74	4	3 Leg Minor Rd Stop Control-Rural Multilanel
5	4-Lane Divided Rurial	315+59.74	399+80.42	5	3 Leg Minor Rd Stop Control-Rural Multilane
6	4-Lane Divided Rural	399+80.42	428+93.20	6	3 Leg Minor Rd Stop Control-Rural Multilane
7	4-Lane Divided Rural	428+93.20	443+44.40	7	3 Leg Minor Rd Stop Control-Rural Multilane
8	4-Lane Divided Rural	443+44.40	454+45.70	8	3 Leg Minor Rd Stop Control-Rural Multilane
9	4-Lane Divided Rural	454+45.70	487+92.35	N/A	Choose an item.
10	4-Lane Divided Rural	487+92.35	500+94.73	N/A	Choose an item.
11	4-Lane Divided w/ Flush Median	500+94.73	522+55.31	9	3 Leg Minor Rd Stop Control-Rural Multilane

The last 0.41 miles of the project (roadway segment #11) is a 4 lane divided roadway with a 14' flush median, which analysis is not available.

SUMMARY

This 8.1 mile project was divided into 11 segments which include 9 intersections. The Highway Safety Manual analysis predicts for the design year ADT of 2040, a total of 41 accidents of which 29 are predicted for the roadway segments and 12 are for the roadway intersections. The revised concept project report changes the median width from 44' to 32'. If the median width were to remain at 44' it would decrease the predicted accidents for the roadway segments by 1%.

This compares to the Highway Safety Manual base condition analysis, which predicts for the design year ADT of 2040, a total of 52 accidents of which 28 are predicted for the roadway segments and 24 are for the roadway intersections.

The higher predicted crash frequency in the proposed roadway segments versus the base roadway segments is due to using a 6.5' paved shoulder width instead of a 8' paved shoulder width. The lower predicted crash frequency in the proposed roadway intersections versus the base roadway intersections is primarily due to the left and right turn lanes on the proposed roadway intersections instead of no turn lanes on the base roadway intersections.

HSM Predictive Method for Rural Multi-Lane (4-Lane) Divided Roadway Segments

Segment			Roadway Segment Base Crash Frequency – Excluding Vehicle and Pedestrian/Bicycle (crashes/year)	Lane Width (base cond. = 12-ft)	Right Shoulder Width (base cond. = 8-ft or more)	Median Width (base cond. = 30-ft)	Lighting (base cond. = none)	Automated Speed Enforcement (base cond. = none)	Total Predicted Average Crash Frequency for Roadway Segment (crashes/year)
ID #	Length (miles)	Analysis Condition	$N_{spf\ rd}$	CMF_{1rd}	CMF_{2rd}	CMF_{3rd}	CMF_{4rd}	CMF_{5rd}	$N_{predicted\ rs}$
1	0.72	Base	2.705	1.0	1.0	1.0	1.0	1.0	2.705
		Proposed	2.705	1.0	1.04	1.0	1.0	1.0	2.813
2	0.96	Base	3.548	1.0	1.0	1.0	1.0	1.0	3.548
		Proposed	3.548	1.0	1.04	1.0	1.0	1.0	3.690
3	1.05	Base	3.924	1.0	1.0	1.0	1.0	1.0	3.924
		Proposed	3.924	1.0	1.04	1.0	1.0	1.0	4.080
4	1.33	Base	4.752	1.0	1.0	1.0	1.0	1.0	4.752
		Proposed	4.752	1.0	1.04	1.0	1.0	1.0	4.942
5	1.60	Base	5.717	1.0	1.0	1.0	1.0	1.0	5.717
		Proposed	5.717	1.0	1.04	1.0	1.0	1.0	5.946
6	0.55	Base	1.920	1.0	1.0	1.0	1.0	1.0	1.920
		Proposed	1.920	1.0	1.04	1.0	1.0	1.0	1.997
7	0.27	Base	1.020	1.0	1.0	1.0	1.0	1.0	1.020
		Proposed	1.020	1.0	1.04	1.0	1.0	1.0	1.061
8	0.21	Base	0.746	1.0	1.0	1.0	1.0	1.0	0.746
		Proposed	0.746	1.0	1.04	1.0	1.0	1.0	0.776
9	0.63	Base	2.432	1.0	1.0	1.0	1.0	1.0	2.432
		Proposed	2.432	1.0	1.04	1.0	1.0	1.0	2.529

10	0.25	Base	0.984	1.0	1.0	1.02	1.0	1.0	0.984
		Proposed	0.984	1.0	1.04	1.02	1.0	1.0	1.024
Total		Base	27.748						27.748
		Proposed	27.748						28.858

HSM Predictive Method for Rural Intersections

		Intersection Base Crash Frequency – Excluding Vehicle and Pedestrian/Bicycle (crashes/year)	Intersection Skew Angle (base cond. = 0 degrees)	Signalized - CMF = 1.0 Unsignalized - Left Turn Lanes on Major Road Approaches (base cond. = none)	Signalized - Right Turn Lanes on all Approaches (base cond. = none) Unsignalized – Right Turn Lanes on Major Approaches	Lighting (base cond. = none)	Total Predicted Average Crash Frequency for Roadway Segment (crashes/year)
Intersection ID #	Analysis Condition	$N_{spf\ int}$	CMF_{1i}	CMF_{2i}	CMF_{3i}	CMF_{4i}	$N_{predicted\ int}$
1	Base	1.690	1.0	1.0	1.0	1.0	1.690
	Proposed	1.690	1.06	0.56	0.86	1.0	0.865
2	Base	2.337	1.0	1.0	1.0	1.0	2.337
	Proposed	2.337	1.06	0.56	0.86	1.0	1.257
3	Base	4.859	1.0	1.0	1.0	1.0	4.859
	Proposed	4.859	1.09	0.52	0.74	1.0	2.035
4	Base	1.724	1.0	1.0	1.0	1.0	1.724
	Proposed	1.724	1.08	0.56	0.86	1.0	0.894
5	Base	1.853	1.0	1.0	1.0	1.0	1.853
	Proposed	1.853	1.04	0.56	0.86	1.0	0.928
6	Base	2.279	1.0	1.0	1.0	1.0	2.279
	Proposed	2.279	1.06	0.56	0.86	1.0	0.803
7	Base	2.362	1.0	1.0	1.0	1.0	2.362
	Proposed	2.362	1.03	1.0	0.86	1.0	2.099
8	Base	2.456	1.0	1.0	1.0	1.0	2.456
	Proposed	2.456	1.07	0.56	0.86	1.0	1.265

9	Base	4.259	1.0	1.0	1.0	1.0	4.259
	Proposed	4.259	1.08	0.45	0.77	1.0	2.219
Total	Base	23.819					23.819
	Proposed	23.819					12.365

SHEET 1 OF 5

EXISTING 2011 ADT

GEORGIA DEPARTMENT OF TRANSPORTATION
OFFICE OF PLANNING

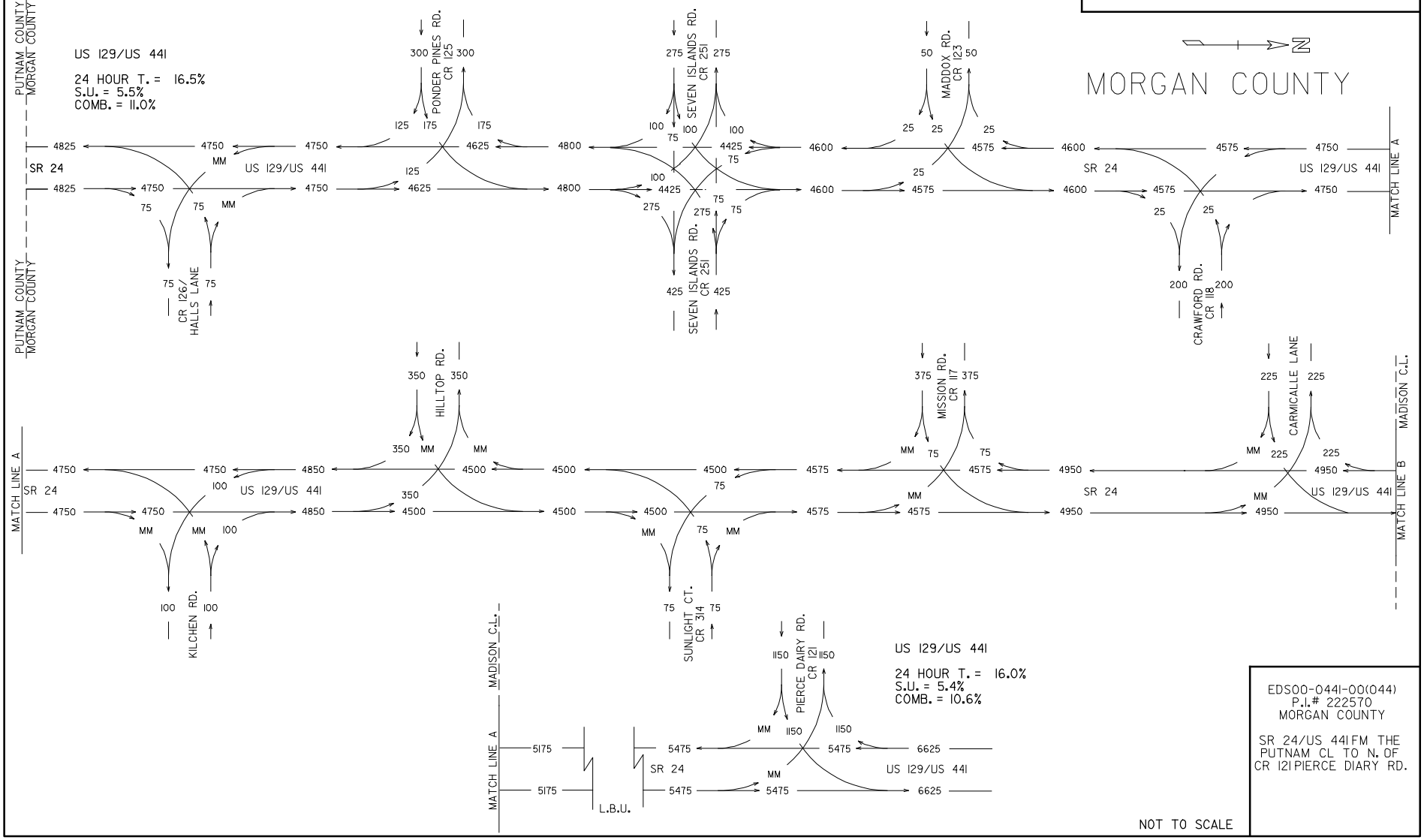

EDS00-0441-00(044)
P.I.# 222570
MORGAN COUNTY

SR 24/US 441 FM THE PUTNAM CL TO N. OF CR 121 PIERCE DIARY RD.

NOT TO SCALE

MTW
10/11

...\Morgan\222570.dgn 10/28/2011 2:48:37 PM micword

SHEET 2 OF 5

GEORGIA DEPARTMENT OF TRANSPORTATION

OFFICE OF PLANNING

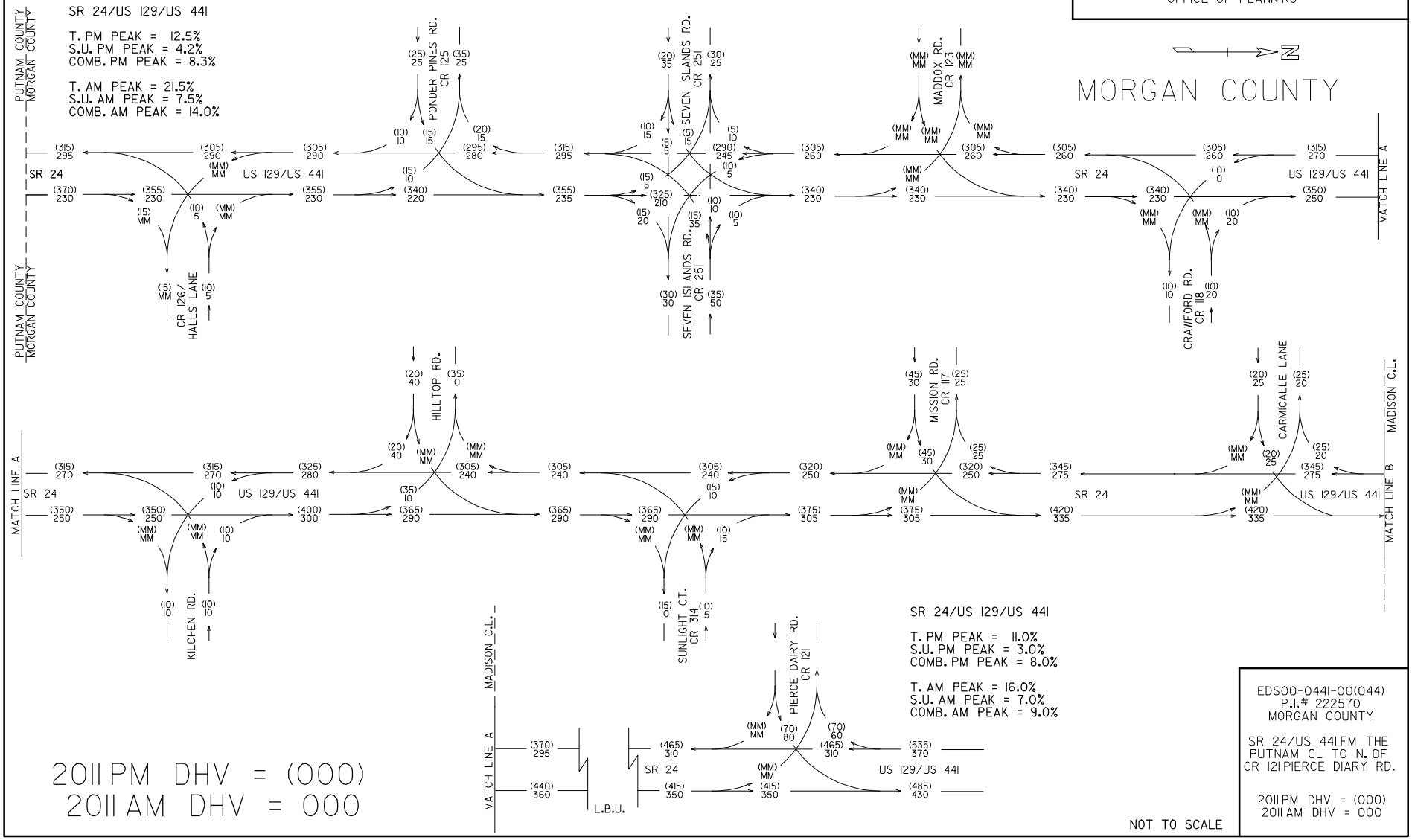

MORGAN COUNTY

EDS00-0441-00(044)
P.I.# 222570
MORGAN COUNTY

SR 24/US 441 FM THE PUTNAM CL TO N. OF CR 121 PIERCE DIARY RD.

2011 PM DHV = (000)
2011 AM DHV = 000

MTW
10/11

...\Morgan\222570.dgn 10/28/2011 2:48:58 PM micword

SHEET 3 OF 5

GEORGIA DEPARTMENT OF TRANSPORTATION
OFFICE OF PLANNING

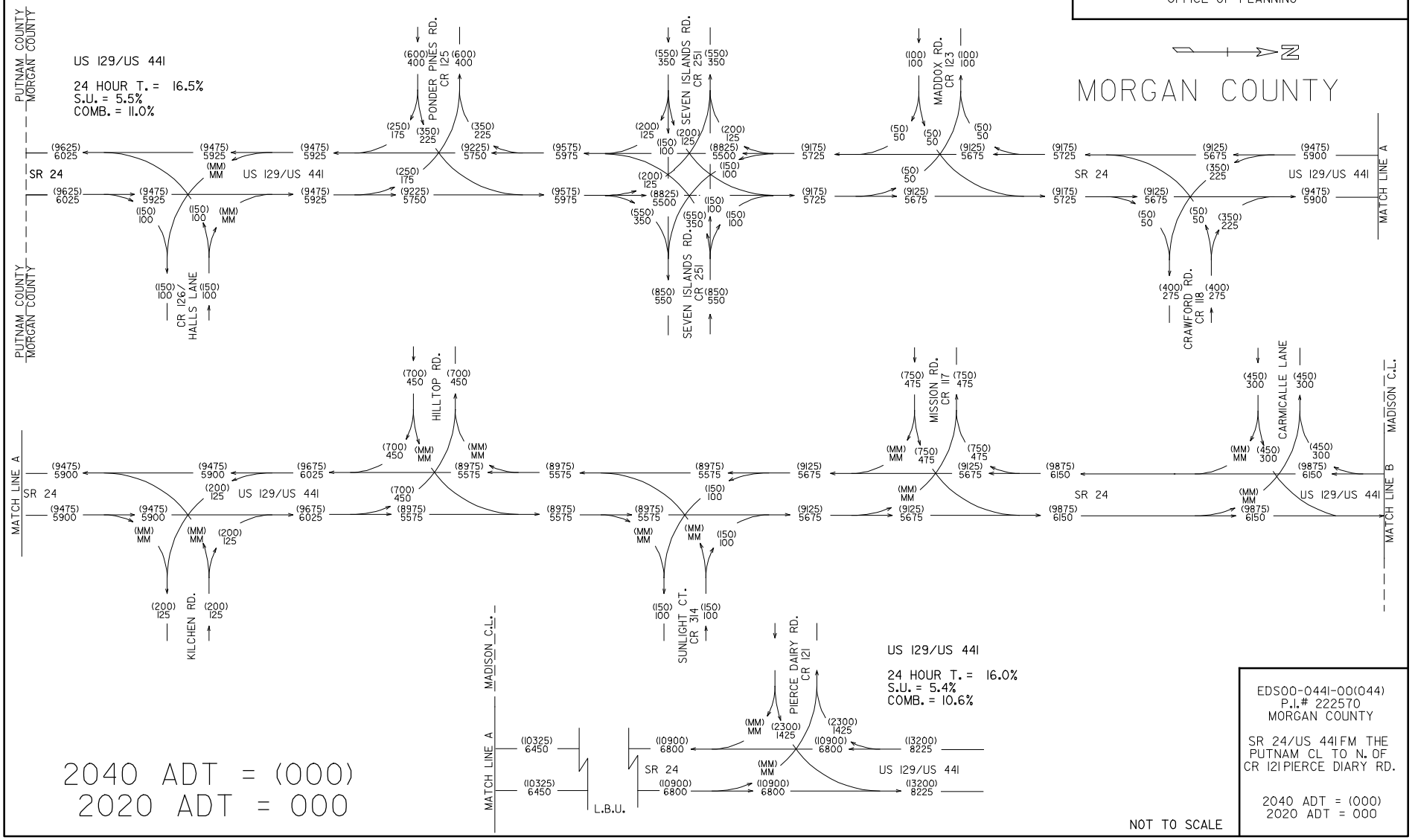

2040 ADT = (000)
2020 ADT = 000

NOT TO SCALE

EDS00-0441-00(044)
P.I.# 222570
MORGAN COUNTY

SR 24/US 441 FM THE PUTNAM CL TO N. OF CR 121 PIERCE DIARY RD.

2040 ADT = (000)
2020 ADT = 000

MTW
10/11

...\Morgan\222570.dgn 10/28/2011 2:49:10 PM micword

SHEET 4 OF 5

GEORGIA DEPARTMENT OF TRANSPORTATION
OFFICE OF PLANNING

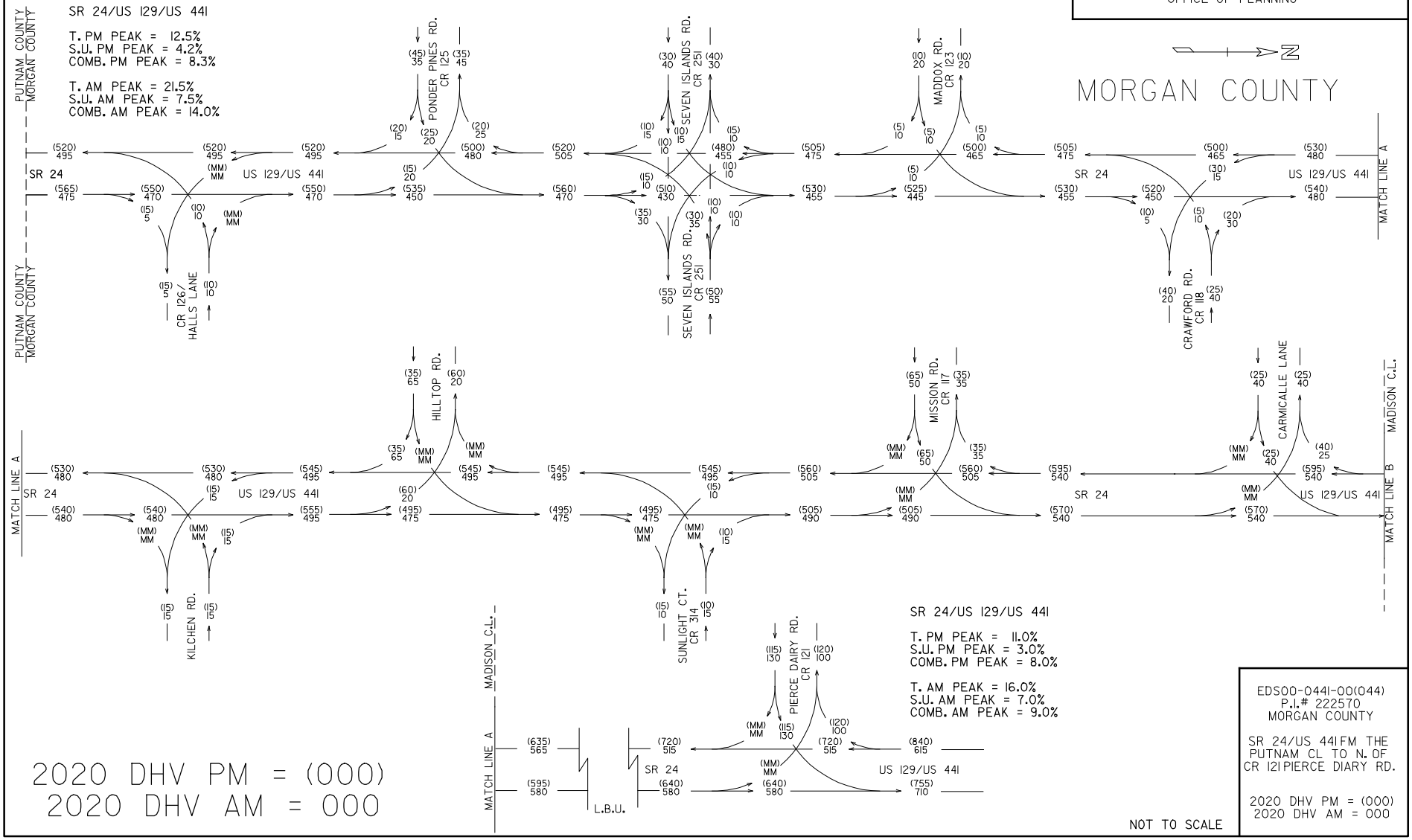

EDS00-0441-00(044)
P.I.# 222570
MORGAN COUNTY

SR 24/US 441 FM THE PUTNAM CL TO N. OF CR 121 PIERCE DIARY RD.

2020 DHV PM = (000)
2020 DHV AM = 000

MTW
10/11

...\Morgan\222570.dgn 10/28/2011 2:49:20 PM micword

SHEET 5 OF 5

GEORGIA DEPARTMENT OF TRANSPORTATION
OFFICE OF PLANNING

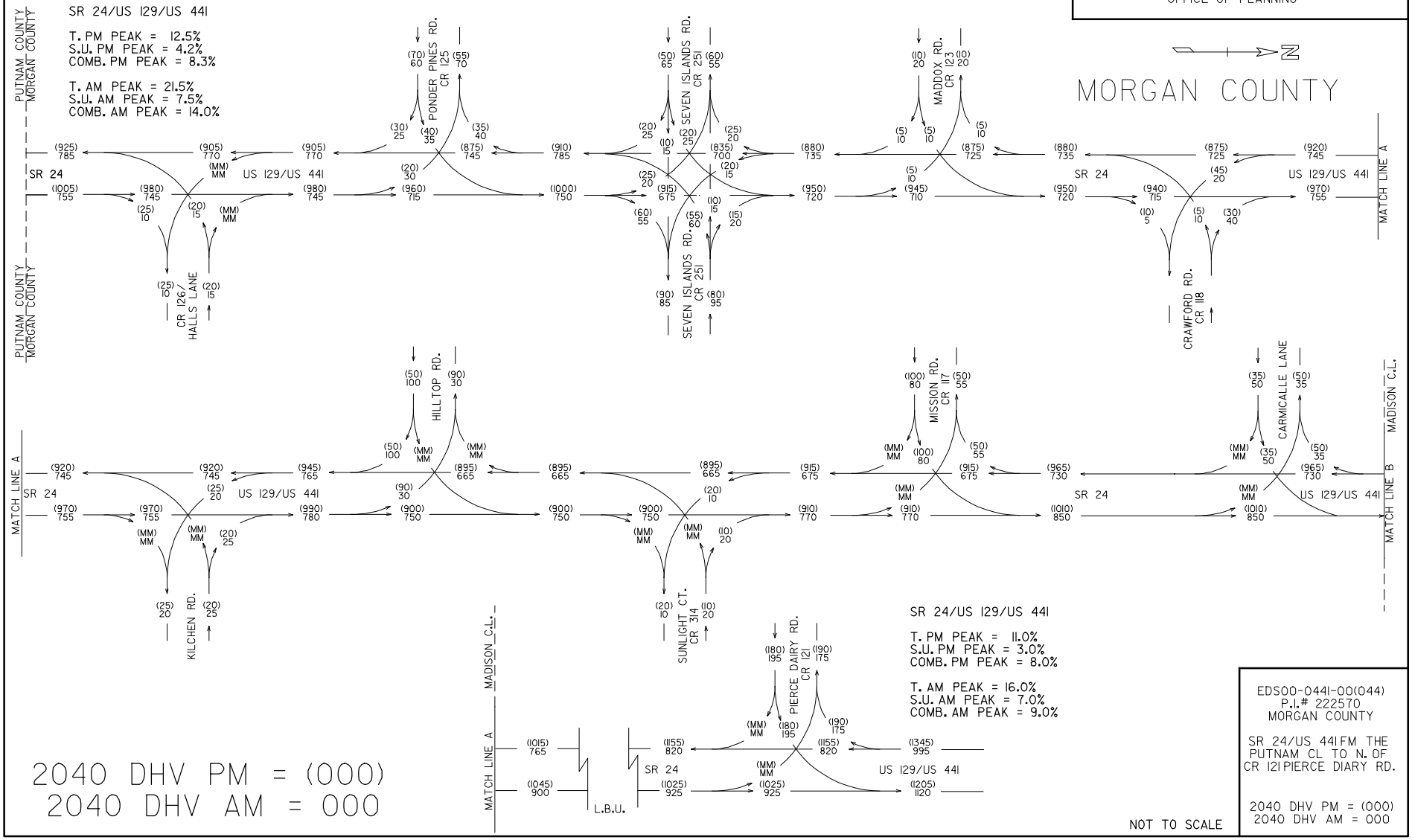

EDS00-0441-00(044)
P.I.# 222570
MORGAN COUNTY

SR 24/US 441 FM THE PUTNAM CL TO N. OF CR 121 PIERCE DIARY RD.

2040 DHV PM = (000)
2040 DHV AM = 000

MTW
10/11

...\Morgan\222570.dgn 10/28/2011 2:49:31 PM micword

DEPARTMENT OF TRANSPORTATION
STATE OF GEORGIA

INTERDEPARTMENT CORRESPONDENCE

FILE: EDS-441(44) & EDS-441(45) Morgan/Putnam
P. I. Nos.: 222570 & 222580
U.S. 441/S.R. 44 Widening and Reconstruction

OFFICE: Engineering Services

DATE: April 17, 2008

FROM: Brian Summers, P.E., Project Review Engineer BEW

TO: Babs Abubakari, P.E. State Consultant Design and Program Delivery Engineer

SUBJECT: **IMPLEMENTATION OF VALUE ENGINEERING STUDY ALTERNATIVES**

Recommendations for implementation of Value Engineering Study Alternatives are indicated in the table below. Incorporate alternatives recommended for implementation to the extent reasonable in the design of the project.

ALT No.	Description	Savings PW & LCC	Implement	Comments
EDS-441(45)				
ROADWAY (RD)				
RD-1	Reduce median width to 32' to reduce Right of Way	$512,862	Yes	This should be done.
RD-4	Re-align roadway to reduce required Right of Way	$93,688 (proposed) $31,226 (actual)	Yes	This will be done from Sta. 330+00 to Sta. 430+00 but will not be done from Sta. 700+00 to 750+00 due to Environmental impacts.
RD-5	Utilize Right of Way for Sediment Basins	Design Suggestion	No	Would result in Utility conflicts since the Sediment Basin would be located where proposed Utilities would be located.
RD-6	Utilize Right of Way to consolidate driveways	Design Suggestion	No	This would affect the property owner's ability to have a direct access to the mainline and could result in a negative impact to the property values.

ALT No.	Description	Savings PW & LCC	Implement	Comments
ROADWAY (RD) - continued				
RD-7	Use RAP from existing roadway	$1,185,638	Yes	This should be done.
RD-8	Retain existing pavement	$373,111	Yes	This should be done where feasible.
RD-10	Relocate harmony Road to minimize new construction	$255,200	No	Would result in additional impacts to the Terrell-Sadler Historic House.
RD-11	Adjust the Bethel Church Road alignment to enhance the safety of traffic operations	Design Suggestion	Yes	This should be done.
RD-12	Adjust the Price Road alignment to enhance the safety of traffic operations	Design Suggestion	Yes	This should be done.
EARTHWORK (EW)				
EW-1	Vertically bifurcate the roadway to reduce earthwork	$591,800	Yes	This should be done where feasible.
EW-2	Adjust fore slopes to reduce earthwork and Right of Way	$504,616	Yes	This should be done.
EW-3	Adjust vertical alignment to reduce Borrow Excavation	$317,900	Yes	This should be done where feasible.
DRAINAGE (DR)				
DR-1	Route median drains to downstream side of the road	Design Suggestion	Yes	This should be done where feasible.
DR-2	Reduce/consolidate Sediment Basins , i.e., Sta. 435+00	Design Suggestion	Yes	This should be done.
DR-3	Modify Right of Way to accommodate outfall maintenance	Design Suggestion	Yes	This should be done.
DR-4	Re-evaluate the elimination of outfalls	Design Suggestion	Yes	This should be done where feasible.

ALT No.	Description	Savings PW & LCC	Implement	Comments
DRAINAGE (DR) - continued				
DR-5	Reduce cross drains	Design Suggestion	Yes	This should be done where feasible.
EDS-441(44)				
ROADWAY (RD)				
RD-31	Re-align roadway to reduce required Right of Way	$97,144	No	Would affect almost 14,000' of roadway which would cause a major redesign effort that would require additional Environmental documentation and would impact the FY 2009 Right of Way schedule.
RD-32	Reduce median width to 32' to reduce Right of Way	$441,259	Yes	This should be done.
RD-35	Utilize Right of Way for Sediment Basins	Design Suggestion	No	Would result in Utility conflicts since the Sediment Basin would be located where proposed Utilities would be located.
RD-36	Utilize Right of Way to consolidate driveways	Design Suggestion	No	This would affect the property owner's ability to have a direct access to the mainline and could result in a negative impact to the property values.
RD-37	Use RAP from existing roadway	$1,051,022	Yes	This should be done.
RD-38	Retain existing pavement	$797,714	Yes	This should be done where feasible.
RD-40	Extend five lanes with shoulders to Sta. 476+00	Design Suggestion	Yes	This should be done.
RD-42	Re-design Seven Island Road intersection	Design Suggestion	Yes	This should be done.
EARTHWORK (EW)				
EW-31	Vertically bifurcate the roadway to reduce earthwork	$433,950	Yes	This should be done where feasible.

ALT No.	Description	Savings PW & LCC	Implement	Comments
EARTHWORK (EW) - continued				
EW-32	Adjust fore slopes to reduce earthwork and Right of Way	$370,041	Yes	This should be done.
EW-33	Reduce vertical alignment to reduce earthwork	$173,800	Yes	This should be done where feasible.
DRAINAGE (DR)				
DR-31	Route median drains to downstream side of the road	Design Suggestion	Yes	This should be done where feasible.
DR-32	Reduce/consolidate Sediment Basins	Design Suggestion	Yes	This should be done.
DR-33	Modify Right of Way to accommodate outfall maintenance	Design Suggestion	Yes	This should be done.
DR-34	Re-evaluate the elimination of outfalls	Design Suggestion	Yes	This should be done where feasible.
DR-35	Re-evaluate the alignment of cross drains	Design Suggestion	Yes	This should be done where feasible.

A meeting was held on March 14, 2008 to discuss the above recommendations. Jim Graybeal and Curtis Dirton with PB World, Stanley Hill and Otis Clark with Consultant Design, and Brian Summers, Ron Wishon and Lisa Myers with Engineering Services were in attendance.

Additional information was provided by the Design Consultant on March 17, 2008.

Approved: Gerald M. Ross **Date:** 4/21/08
Gerald M. Ross, P. E., Chief Engineer

BKS/REW

Attachments

STATE	PROJECT NUMBER	SHEET NO.	TOTAL SHEETS
GA	EDS00-0441-00(044)		

TYPICAL SECTION 1

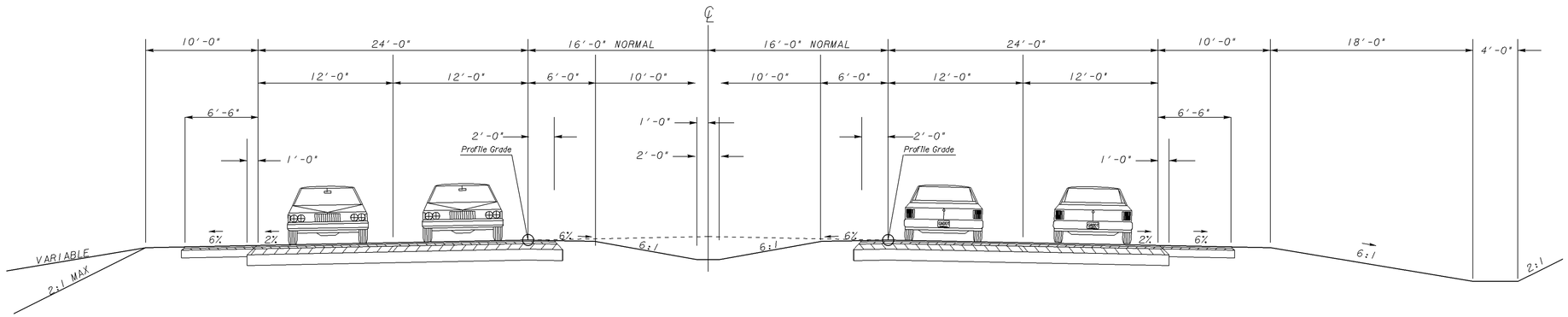

Tangent

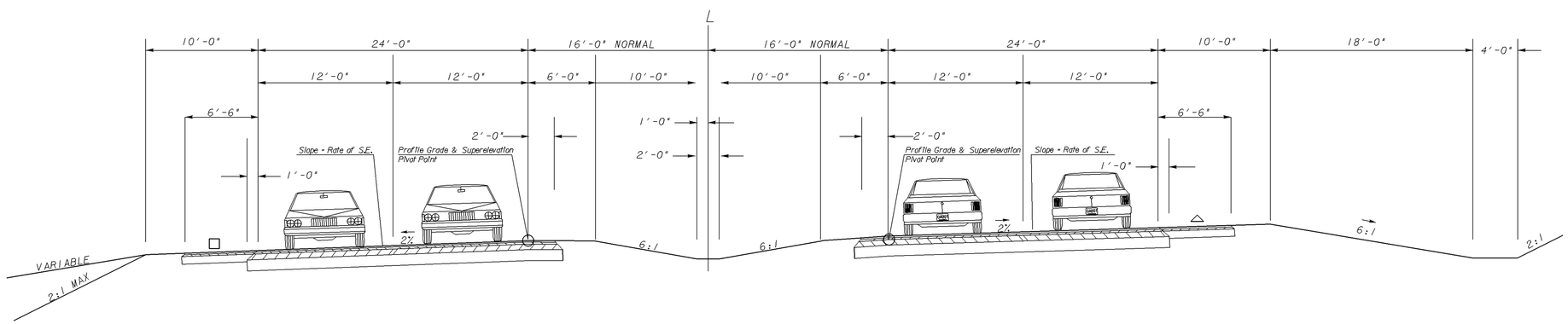

Superelevation

NOT TO SCALE

REVISION DATES		

STATE OF GEORGIA
DEPARTMENT OF TRANSPORTATION

OFFICE: ROAD DESIGN

TYPICAL SECTIONS

EDS00-0441-00(044)
MORGAN/PUTNAM COUNTY

DRAWING No.
5-01

STATE	PROJECT NUMBER	SHEET NO.	TOTAL SHEETS
GA	EDS00-0441-00(044)		

TYPICAL SECTION 2

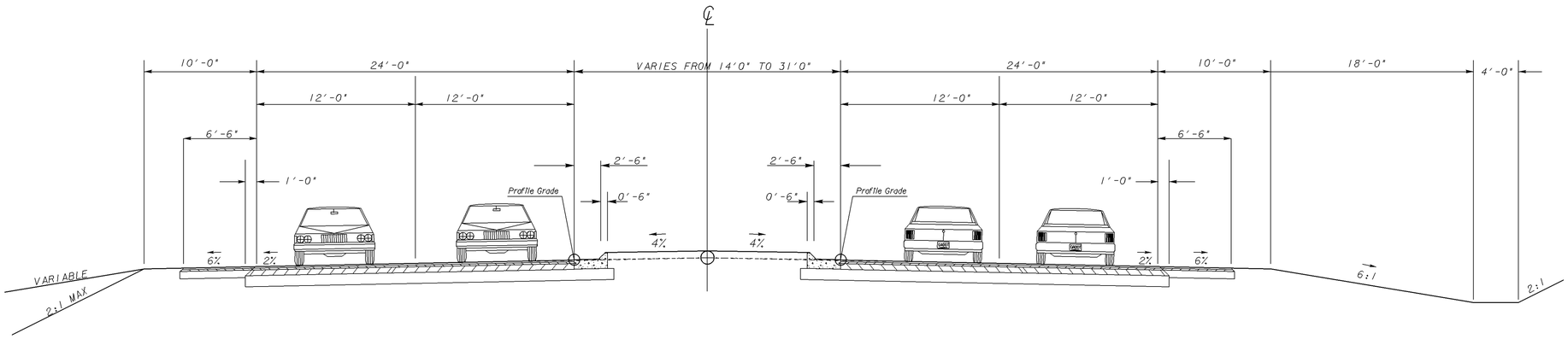

Tangent

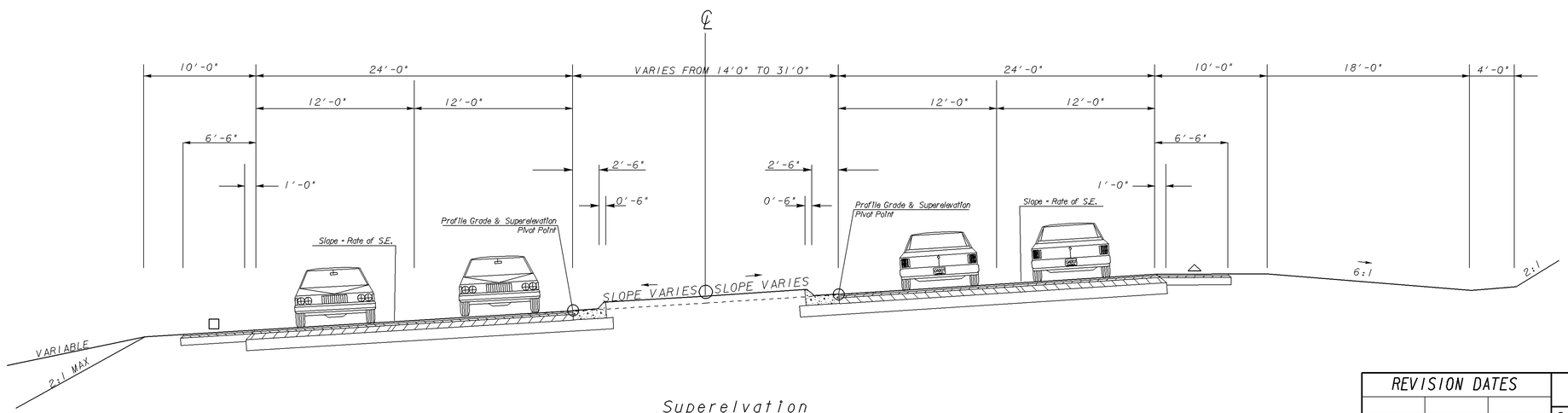

Superelvation

NOT TO SCALE

REVISION DATES		

STATE OF GEORGIA
DEPARTMENT OF TRANSPORTATION

OFFICE: ROAD DESIGN

TYPICAL SECTIONS

EDS00-0441-00(044)
MORGAN / PUTNAM COUNTY

DRAWING No.
5-02

STATE	PROJECT NUMBER	SHEET NO.	TOTAL SHEETS
GA	EDS00-0441-00(044)		

TYPICAL SECTION 3

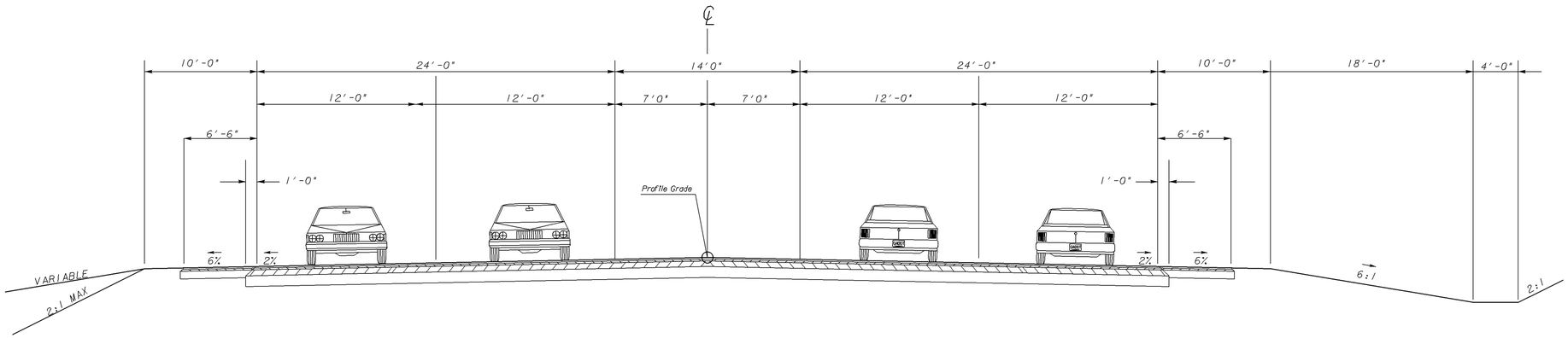

Tangent

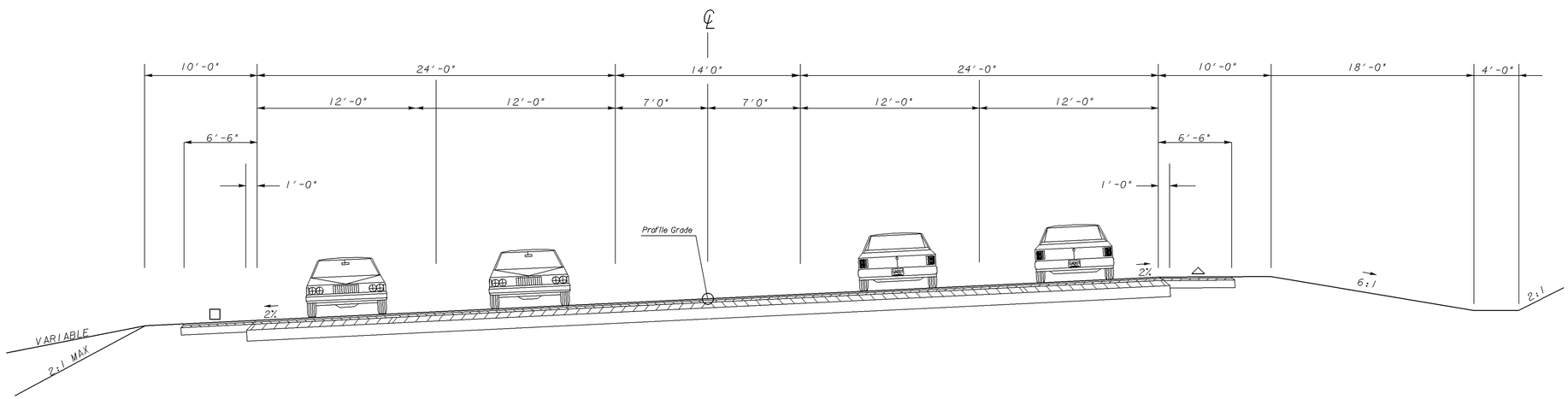

Superelvation

NOT TO SCALE

REVISION DATES		

STATE OF GEORGIA
DEPARTMENT OF TRANSPORTATION

OFFICE: ROAD DESIGN

TYPICAL SECTIONS

EDS00-0441-00(044)
MORGAN / PUTNAM COUNTY

DRAWING No.
5-03

STATE	PROJECT NUMBER	SHEET NO.	TOTAL SHEETS
GA	EDS00-0441-00(044)		

TYPICAL SECTION 4

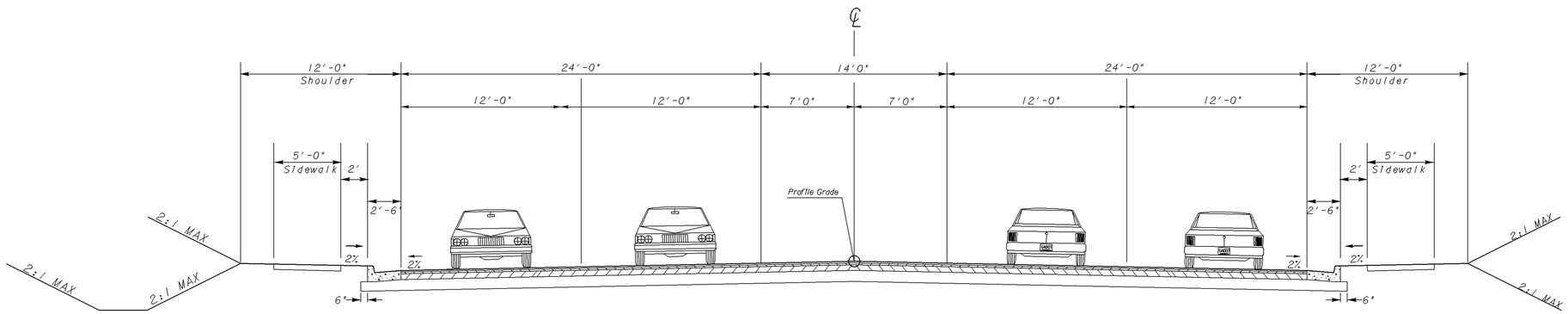

Tangent

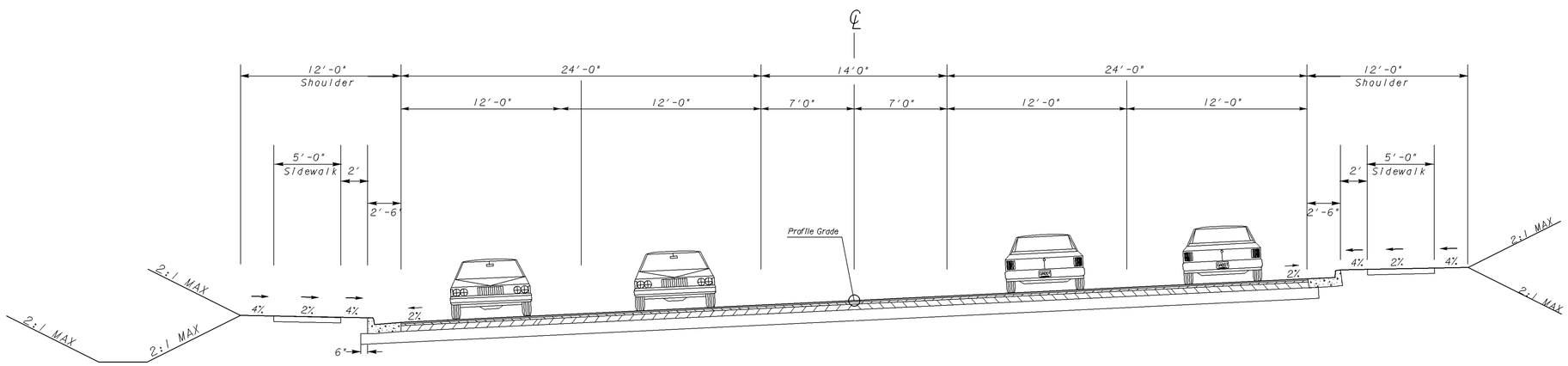

Superelvation

NOT TO SCALE

REVISION DATES		

STATE OF GEORGIA
DEPARTMENT OF TRANSPORTATION

OFFICE: ROAD DESIGN

TYPICAL SECTIONS

EDS00-0441-00(044)
MORGAN / PUTNAM COUNTY

DRAWING No.
5-04