State of Georgia

Department of Transportation

Regulations for Driveway and Encroachment Control

Regulations for Driveway and Encroachment Control

7/3/2019

Revision 5.0

Atlanta, Georgia 30308

Georgia Department of Transportation

State of Georgia
Department of Transportation
State Traffic Safety & Design Engineer

Wayne Shackelford Building
935 United Avenue
Building 24
Atlanta, Georgia 30316

Copies of this document may be obtained by visiting or writing the Office of Traffic Safety and Design at the above address. The document can also be downloaded from the website below.

Visit our website at: http://www.dot.ga.gov/

Revision History

Revision Number	Revision Date	Revision Summary
1.0	6/1/04	All Chapters - Editorial
2.0	12/01/04	All Chapters - Editorial
2.1	1/21/05	Chapter 7 - Referenced TOPPS
2.2	12/20/05	Chapter 7 – Referenced TOPPS and billboard policy revisions
2.3	10/06/06	Chapters 2, 3, and 4 – Revisions New appendix E Revised appendix F
2.4	3/18/09	Chapters 2, 3, 4, 6, 7 and 8 – Revisions New figures 2-1, 3-1.2, 4-12
3.0	10/09/09	General Revisions and Updates Policies and Procedures Referenced Revised Charts and Figures (Chapters 1, 2, 3, 4, 5 & 7)
4.0	3/15/16	Updated manual to new standard template. Policies updated throughout entire manual
4.1	8/22/18	Updated GDOT logo throughout
5.0	7/3/19	All Chapters – Revised New GPAS References Updated Figures and Charts (Chapter 3, 4, 10, and Appendices)

Intentionally Left Blank

List of Effective Chapters

Document	Revision Number	Revision Date
List of Effective Chapters	5.0	7/3/19
Table of Contents	5.0	7/3/19
Definitions	5.0	7/3/19
Chapter 1. Introduction	5.0	7/3/19
Chapter 2. Permit Procedures	5.0	7/3/19
Chapter 3. Spacing of Driveways	5.0	7/3/19
Chapter 4. Design Criteria	5.0	7/3/19
Chapter 5. Signing and Marking	5.0	7/3/19
Chapter 6. Drainage Design	5.0	7/3/19
Chapter 7. Special Encroachments	5.0	7/3/19
Chapter 8. Residential Driveways	5.0	7/3/19
Chapter 9. Mailboxes	5.0	7/3/19
Chapter 10. School Driveways	2.0	7/3/19
Appendix A. Contact Information	5.0	7/3/19
Appendix B. Permit Applications	5.0	7/3/19
Appendix C. Residential Driveway Permit Request	1.0	7/3/19
Appendix D. Impact Study Certification	5.0	7/3/19
Appendix E. Permit Related Documents	5.0	7/3/19
Appendix F. Waiver Form	5.0	7/3/19
Appendix G. Movie Production Documents	2.0	7/3/19

Intentionally Left Blank

Table of Contents

Revision History i
List of Effective Chapters iii
Table of Contents v
Definitions ix
Chapter 1. Introduction - Contents 1-i
1.1 Purpose 1-1
1.2 Background 1-1
1.3 Authority 1-1
1.4 When Permits Are Required 1-1
Chapter 2. Permit Procedures - Contents 2-i
2.1 Application 2-1
2.1.1 Applicant Qualifications 2-1
2.1.2 Permit Forms 2-1
2.1.3 Preliminary / Conceptual Site Plan 2-2
2.1.4 Overall Site Plans 2-2
2.2 Performance Bonds 2-2
2.3 Plan Requirements 2-4
2.3.1 Plan Checklist 2-4
2.4 Traffic Impact Studies 2-7
2.5 Permit Procedures 2-8
2.5.1 Department Approval 2-9
2.5.1.1 A Median Opening Approval 2-10
2.5.1.2 Intersection Control Evaluation (ICE) 2-10
2.5.1.2.1 Roundabouts 2-10
2.5.1.2.2 Reduced Conflict U-Turns (RCUT) 2-11
2.5.1.2.3 Continuous Flow Intersection (CFI) 2-11
2.5.1.2.4 Continuous Green-T (CGT) 2-11
2.5.2 Traffic Signal Permits 2-11
2.6 Conditions Placed On Permits 2-12
2.6.1 General Restrictions 2-12
2.6.2 Liability and Responsibility of Applicant 2-13
2.6.3 Ownership of Completed Work 2-14
2.7 Department's Responsibilities 2-14
Chapter 3. Spacing of Driveways - Contents 3-i

3.1 Spacing of Driveways 3-1
3.1.1 Spacing of One-Way Driveways 3-1
3.1.2 Placement of Driveways 3-2
3.1.3 Placement of Interior Driveways 3-3
3.2 Driveway Alignment 3-4
3.3 Spacing of Median Openings 3-5
3.4 Spacing of Signalized Intersections 3-6
3.5 Sight Distance - Without Medians 3-6
Chapter 4. Design Criteria - Contents 4-i
4.1 Design for Trucks 4-1
4.2 Driveway Width 4-2
4.3 Corner Radii 4-2
4.4 Left Turning Control Radii 4-3
4.5 Median Opening Design 4-3
4.5.1 Type B Median Opening 4-3
4.5.2 Type C Median Opening 4-3
4.6 Horizontal Alignment 4-6
4.6.1 Angle of Intersection 4-6
4.6.2 Alignment of Approach and Departure Lanes 4-7
4.7 Driveway Tie-In Configurations 4-8
4.7.1 Driveway Connections to Urban Sections 4-8
4.7.2 Driveway Connections to Rural Sections 4-9
4.8 Driveway Grades 4-12
4.9 Auxiliary Turn Lanes 4-13
4.9.1 When Deceleration Lanes Are Required 4-13
4.9.1.1 Minimum Requirements for Right Turn Deceleration Lanes 4-13
4.9.1.2 Minimum Requirements for Left Turn Lanes 4-14
4.9.2 Right Turn Lane Lengths 4-15
4.9.3 Acceleration Lanes 4-16
4.9.4 Left Turn Lane Design 4-16
4.9.5 Dual Left Turn Lanes 4-18
4.10 Raised Islands 4-20
4.11 Restricted Movement Driveways 4-23
4.12 Pedestrian Considerations 4-24
4.13 Clear Zone Requirements 4-26
4.14 Pavement Design 4-27
4.15 Right of Way Requirements 4-27

Chapter 5. Signing and Marking - Contents 5-i
5.1 Signing 5-1
5.1.1 Types of Signs 5-1
5.1.2 Installation of Signs 5-1
5.2 Pavement Marking 5-1
Chapter 6. Drainage Design - Contents 6-i
6.1 Hydrology Reports 6-1
6.1.1 Drainage Areas 6-2
6.1.2 Runoff Determination 6-2
6.2 Drainage Design 6-2
6.2.1 On-Site Detention Systems 6-2
6.2.2 Driveway Drainage 6-2
6.2.3 Discharge into State Highway System 6-3
6.2.4 Miscellaneous Design Requirements 6-3
Chapter 7. Special Encroachments - Contents 7-i
7.1 Purpose 7-1
7.2 Scope 7-1
7.3 Allowable Encroachment Activities 7-1
7.3.1 Grading / Excavating 7-2
7.3.2 Aesthetics, Landscaping, Roadside Development and Maintenance 7-2
7.3.2.1 Grading and Landscape Permit Considerations 7-2
7.3.2.2 Mitigation 7-4
7.3.3 Groundwater Monitoring Wells 7-4
7.3.4 Film Production Activities 7-4
7.3.5 Race and Run Activities 7-5
7.3.6 Replacement of Limits of Access (L/A) Fence 7-5
7.3.7 Other Miscellaneous Activities 7-6
7.4 Special Encroachment Permit Procedures 7-6
7.4.1 Preliminary Plan Submittal 7-6
7.4.2 Initial GDOT Review Responsibilities 7-7
7.4.3 The Transportation Management Center Office Review & Approval for Encroachment Permits on Limited Access & Interstate R/W 7-8
7.4.4 Appeals 7-9
7.4.5 Conditions of Permit 7-9
7.5 Plan Requirements for Special Encroachments 7-9
7.6 Inspection and Acceptance of Work 7-11
Chapter 8. Residential Driveways - Contents 8-i

8.1 Side Drain Pipes 8-2
8.2 Farm Use, Logging & Mining Driveways 8-2
8.3 Utility Driveways 8-3
Chapter 9. Mailboxes - Contents 9-i
9.1 Purpose 9-1
9.2 Acceptable Standards for Residential Mailboxes 9-1
9.3 Policy 9-1
Chapter 10. School Driveways - Contents 10-i
10.1 Concept Review 10-1
10.2 Driveway Permit and Site Design 10-1
10.2.1 Driveways 10-2
10.2.2 Driveway Spacing 10-2
10.2.3 Driveway Location and Design 10-2
10.2.4 Internal Design 10-2
10.2.5 Site Recommendations 10-3
10.3 School Speed Zones 10-3
10.3.1 School Speed Zone Limits 10-3
10.3.2 Flashing Speed Limit Assemblies 10-3
10.3.3 Automated Traffic Enforcement Safety Device (ATESD) 10-4
10.4 Proposed Traffic Signals 10-4
Appendix A. Contact Information A-1
Appendix B. Permit Applications B-1
Appendix C. Residential Driveway Permit Request C-1
Appendix D. Impact Study Certification D-1
Appendix E. Permit Related Documents E-1
Appendix F. Waiver Form F-1
Appendix G. Movie Production Documents G-1

Definitions

The following terms, as used in this document, shall have the following meanings unless the context thereof indicates to the contrary.

AASHTO

(American Association of State Highway and Transportation Officials), which publishes documents in this manual, including A Policy on Geometric Design (Green Book).

Acceleration Lane

A lane used for acceleration including tapered areas for the purpose of enabling vehicles entering the roadway to increase its speed. Refer to AASHTO for lengths.

Access

Any driveway or street providing for the movement of vehicles to or from the public roadway system.

Access Management

The systematic control of the location, spacing design, and operation of driveways, median openings, interchanges, and street connections to a roadway.

ADA

American with Disabilities Act - A civil rights law that prohibits discrimination against individuals with disabilities in all areas of public life, including jobs, schools, transportation, and all public and private places that are open to the general public.

ADT

Average Daily Traffic – The total volume during a given time period (in whole days), greater than one day and less than a year, divided by the number of days in that time period.

Angle of Two-Way Driveway

The angle of deflection measured from the centerline of the nearest travel lane to the centerline of the driveway. An angle of 90 degrees is desirable.

Applicant

The person or organization that has applied for a permit.

Auxiliary Lane

A lane striped for use, but not for through traffic.

Begin Limited Access/BLA

On a parcel adjacent to GDOT existing ROW boundary line or GDOT required ROW boundary line whereas the “limited access rights” begin.

Blanket Performance Bond

A document which covers one applicant for several locations for work performed throughout the state of Georgia to ensure payment in case the applicant fails to pay.

Categorical Exclusion (C.E.) – Refer to Programmatic Categorical Exclusion.

Central Business District

An area characterized by considerable commercial and retail businesses, banks, and churches, with sidewalks and concentrated pedestrian activity, curb and gutter, speed limits 35 MPH and below, and sometimes on-street parking.

Clear Zone

The roadside recovery area should remain free of hazards such as steep embankments, trees, poles, etc. Studies have indicated that on high-speed highways, over 45 mph, a width of 30' or more from the edge of the traveled way permits about 80 percent of the vehicles leaving a roadway out of control to recover safely. For determining clear zones for commercial driveways, use Table 4-10. Use the posted speed limit and the latest available traffic count data (ADT) to enter the table and use the higher distance for "Fill Slopes" 5:1 to 4:1.

Commercial Driveway

Any private entrance or other vehicular passageway to any property used for commercial purposes. This could include exit, ramp, tunnel, bridge, or side road (20' or larger one way, or 24' or larger two way). This does not include residential, farm road driveways, mining/logging driveways.

Community Improvement District (CID)

A type of Business Improvement District (City Business Improvement District) O.C.G.A. & 38-43; a defined area of non-residential properties, whose owners choose to pay an additional tax or fee.

Commercial Driveway

Any private entrance, exit, ramp, tunnel, bridge, side road or other vehicular passageway to any property used for commercial purposes, 20' or larger (one way), or 24' or larger (two way), except a farm or dwelling house not exceeding a four-family capacity, and leading to or from any public road on the State highway system. (Code 1933, Section 95A-942, enacted by Ga. Law 1973, page 947, section 1.)

Conceptual Review

A preliminary review of a site or proposed development for initial comment and discussion on access location and design considerations.

Contributory Value Fee

Fee paid for a removed tree or removed trees, which compensates the Department for the Contributory Value of that tree or trees to the value of the Right of Way.

Construction Driveway

A temporary driveway which leads to an undeveloped construction site.

Controlled Access

A highway where pedestrians or animals are prevented from entering the roadway with fencing.

Daylighting

The process of the removal of vegetation from the right of way to provide visibility for an adjacent business or outdoor advertising sign without a permit or benefit to the Department. Daylighting is not allowed. The unmanaged woods beyond the clear zone provide valuable buffering, storm water treatment, and soil stability. Disturbance of the unmanaged woods by clearing underbrush, unless it is invasive plant material, is not a benefit to the Department.

Deceleration Lane

A speed-change lane, including tapered areas, for the purpose of enabling a vehicle that is making an exit turn from a roadway to slow to a safe turning speed after it has left the mainstream of faster-moving traffic. Also called a “decel lane"; it denotes a right turn lane or a left turn lane into a development.

Department or DOT

The Georgia Department of Transportation (GDOT).

Design Exception

A design condition that does not meet AASHTO guidelines and requires specific approval from the GDOT Chief Engineer and FHWA for Projects of Division Interest.

Design Policies

The proper design of driveways involves a number of design elements. Due to the complexity of the interaction between these design elements, exact design criteria cannot be specified for every possible situation. Therefore, design guidelines are included to assist the designer.

Design Variance

A design condition that does not meet GDOT policy. A design variance requires specific approval from the GDOT Chief Engineer.

Design Vehicle

A selected motor vehicle, the weight, dimensions, and operating characteristics of which are used as a control in road design. As defined by FHWA: the longest vehicle permitted by statute of the road authority (state or other) on that roadway (MUTCD).

Divided Highway

A roadway on which traffic traveling in opposite directions is physically separated by a median.

Driveway Width

The narrowest width of a driveway measured perpendicular to centerline of the driveway, from edge of pavement to edge of pavement or edge of gutter to edge of gutter.

Easement Limited Agreement (ELA)

A legal document that details the conditions of a utility's rights.

Indemnity Agreement

A contract that holds a business or company harmless for any burden, loss, or damage.

Interior Drive

A driveway that is located inside an existing or proposed development which is placed beyond the intersecting driveway that connects to the state highway.

Interparcel Access

A roadway or series of connecting roads within a property providing access to interior lot frontage or other properties not connected to a public road or state route.

Intersection Control Evaluation (ICE)

A process used to evaluate multiple alternatives for intersections/points of access and choose the best alternative for any given location. (Refer to the ICE Policy).

Island

A device used to separate or direct traffic in order to facilitate the safe and orderly movement of vehicles. An island may be a raised area that provides a physical barrier to channel traffic movements or a painted area.

ITE

Institute of Transportation Engineers

Limited Access

A highway where access driveways or roads are not allowed.

Median Opening

An opening constructed in the median strip of a divided highway designed to allow traffic movements to cross from one side of the highway to the other. In some cases, the Traffic Engineer may require the design to be such that some movements are physically prohibited.

Milepost

DOT mileposts are the small green and white signs located along state routes numbered in sequence, approximately one mile apart, usually running from south to north or from west to east. All proposed developments are referenced to the nearest milepost at one-tenth mile increments.

Mitigation

The partial reduction of the loss of green space by replanting, ground restoration and stabilization, fees for the appraised value of removed vegetation that cannot be replaced, and punitive fess for unauthorized removal of vegetation from the disturbed area. Removal of vegetation within buffers of state waters is not allowed.

M.U.T.C.D.

The Manual on Uniform Traffic Control Devices. (Current Edition)

Non-commercial Driveway

A driveway serving a school, government building, church, hospital or other non-commercial organization inviting public use. Design guidelines relating to commercial driveways will be applicable to driveways serving these land uses.

Performance Bond

A document which ensures payment of a sum of money in case the applicant or contractor fails to pay (See blanket Performance Bond).

Permit

A legal document issued by the Department authorizing an applicant to do specific work on state rights-of-way.

Permit Inspector

A technician assigned to a DOT Area Office, with the responsibility of working with the applicant or the applicant's contractor while actual construction is ongoing to ensure construction is in compliance with the Department's policies, regulations, and standards as stated on the approved permit plans. The permit inspector will notify the Permit Engineer when the applicant and the Area Engineer determine that the work is acceptable.

Programmatic Categorical Exclusion (PCE)

An environmental document required by the Federal Highway Administration on any permits that will not induce any significant impacts to planned growth, land use, natural, cultural, recreational, or historical sites. This document will also be required for areas that will not involve significant air, noise, or water quality.

Residential Driveway

A driveway which leads to a private residential dwelling that is usually 14’ to 16’ wide.

Right-of-Way (R/W)

All land under the jurisdiction of, and whose use is controlled by the Department.

Right-of-Way Line

A line that defines the limits of the R/W of a public road as it relates to adjacent property.

Right-of-Way Miter

A right-of-way line at an intersection, which is parallel to neither road but forms a triangle with extensions of the R/W lines of the adjacent sides of the intersecting roads. The purpose of the

R/W miter is to provide improved visibility for vehicles approaching the intersection by enabling the Department to eliminate visual obstructions or provide room for a traffic signal support pole or guy wire. A driveway should never be allowed along the R/W miter.

Roadside Design Guide

AASHTO Roadside Design Guide

Roadway

The portion of a highway, including shoulders, for vehicle use.

Rural Conditions

This document defines access and spacing criteria separately for urban and rural conditions. Rural conditions typically refer to roadways that have shoulders, posted speed limits over 45 MPH, and lower land use density.

Semi-trailer (18-wheeler, tractor trailer, big rig, etc.)

Is the combination of a tractor unit and one or more semi-trailers to carry freight.

Sight Distance

The distance visible to the driver of a passenger vehicle measured along the normal travel path of a roadway from a designated location and to a specified height above the roadway, when the view is unobstructed by traffic.

Stopping Sight Distance

The sum of two distances: the distance traversed by the vehicle from the instant the driver sights an object necessitating a stop to the instant the brakes are applied and the distance required to stop the vehicle from the instant brake application begins. (A Policy on Geometric Design of Highways and Streets, {"AASHTO Green Book"}, 2011, 3.2.2) Stopping sight distance is measured based on an eye height of 3.5' and an object height of 3.5' (AASHTO Green Book, 2011, 3.2.6.), or calculated based on future conditions.

Traffic Engineer

An engineer whose primary responsibility is to assist applicants with permit applications, plan review and to ensure compliance with the Department's regulations.

Traveled Way

The portion of the roadway for the movement of vehicles, exclusive of shoulders and auxiliary lanes.

Urban Conditions

This document defines access and spacing criteria separately for urban and rural conditions. Urban conditions typically refer to roadways that have curb & gutter, sidewalks, posted speed limits 45 MPH or below and higher land use density.

Utility

All privately, publicly or cooperatively owned water distribution and sanitary sewer facilities and systems for producing, transmitting or distributing communication, cable television,

power, electricity, light, heat, gas, oil, crude products, steam, waste and storm water not connected with highway drainage, including river gages, fire and police signals, traffic control devices, and street lighting systems, which directly or indirectly serve the public or any part thereof. The term “utility” may also be used to refer to the owner of any above described utility or utility facility.

Utility Driveways

Drive for access to utility sites such as water tanks, water meters, sewer lift stations, telephone service cabinets, power substations or gas regulator sites.

Utility Facility

The term “utility facility” shall include but is not limited to, any and all poles, wires, guys, anchors, buried cable, conduit, pedestals, pipe lines, hydrants, valve boxes, manholes, casings, river gages and related fixtures authorized in the permit or agreement.

Intentionally Left Blank

Chapter 1. Introduction - Contents

Chapter 1. Introduction - Contents 1-i
1.1 Purpose 1-1
1.2 Background 1-1
1.3 Authority 1-1
1.4 When Permits Are Required 1-1

Chapter 1. Introduction

1.1 Purpose

The purpose of the driveway permit process is to manage access on the State Highway System. Access regulations are necessary in order to preserve the functional integrity of the State Highway System and to promote the safe and efficient movement of people and goods.

This document is intended to clearly define the process of designing and constructing a legal driveway or other work within the State Highway rights-of-way.

1.2 Background

The safety and efficiency of the State Highway System are affected by the amount and character of intersecting streets and driveways. While it is recognized that property owners have certain rights of access, the public also has the right to travel on the road system with relative safety and freedom from interference.

The Georgia Department of Transportation is interested in balancing the often conflicting interests of property owners with those of the general public. As the number of driveways continues to increase, the Department has recognized the need to develop a comprehensive set of regulations that is equitable and clearly defined.

In the process of developing these regulations, a survey of the practices of other States was conducted. The resulting regulations are consistent with guidance published by the American Association of Highway and Transportation Officials (AASHTO), the Federal Highway Administration (FHWA), and the Institute of Transportation Engineers (ITE).

1.3 Authority

The regulations and procedures described in this document are established pursuant to Georgia Code §32-6-51 and §32-6-133.

1.4 When Permits Are Required

A permit is required prior to performing any construction work or non-routine maintenance within the State Highway Right-of-Way. This includes but is not limited to the following: grading, landscaping, drainage work, temporary access to undeveloped land for logging operations, or the construction of a development. Any revisions to any portion of existing driveways, i.e. widening, for existing driveways only, and/or relocation that are within the State Highway Right-of-Way shall also require a permit. If any significant change in land use is requested, the department has the right to refer to the redesign of the commercial driveways.

In addition to being unlawful, performing the above-described work within the State Highway-Right-Way without a permit, shall entitle the Department to barricade, displace, or otherwise close such driveway and to collect the costs therefore from the violator as provided for in Georgia Code §32-6-134.

Any commercial driveway constructed prior to July 1, 1973, and adjudged by the Department to be unsafe for the traveling public or in violation of Department regulations promulgated pursuant to

Code §32-6-133 may be changed or caused to be changed by the Department so as to eliminate any unsafe features; or it may be closed or displaced by substitution of another driveway at such a place or of such design as may be deemed safe. Liability for the expense of such change or substitution will be determined in accordance with Georgia Code §32-6-134.

Chapter 2. Permit Procedures - Contents

Chapter 2. Permit Procedures - Contents 2-i
2.1 Application 2-1
2.1.1 Applicant Qualifications 2-1
2.1.2 Permit Forms 2-1
2.1.3 Preliminary / Conceptual Site Plan 2-2
2.1.4 Overall Site Plans 2-2
2.2 Performance Bonds 2-2
2.3 Plan Requirements 2-4
2.3.1 Plan Checklist 2-4
2.4 Traffic Impact Studies 2-7
2.5 Permit Procedures 2-8
2.5.1 Department Approval 2-9
2.5.1.1 A Median Opening Approval 2-10
2.5.1.2 Intersection Control Evaluation (ICE) 2-10
2.5.1.2.1 Roundabouts 2-10
2.5.1.2.2 Reduced Conflict U-Turns (RCUT) 2-11
2.5.1.2.3 Continuous Flow Intersection (CFI) 2-11
2.5.1.2.4 Continuous Green-T (CGT) 2-11
2.5.2 Traffic Signal Permits 2-11
2.6 Conditions Placed On Permits 2-12
2.6.1 General Restrictions 2-12
2.6.2 Liability and Responsibility of Applicant 2-13
2.6.3 Ownership of Completed Work 2-14
2.7 Department's Responsibilities 2-14

Chapter 2. Permit Procedures

2.1 Application

Application, to perform any construction or non-routine maintenance work within State Highway Right-of-Way (R/W), must be made at the appropriate office in the District where the site is located. For commercial driveways, application is made to the District Traffic Operations Office at the District Office. The District Traffic Operations Office is the central point of contact. Application for residential driveways and temporary use driveways are made at the District Area Office. See Appendix A for a list of the District Offices and contact information. An applicant may also apply for a commercial or special encroachment permit application by the department's electronic website GPAS AMPS (Refer to the Access Management Permitting System Tutorials).

2.1.1 Applicant Qualifications

Application for a permit under these regulations will be accepted only from the property owner, lessor or an official representing the company, organization or group which owns or leases the property abutting the R/W and upon which the driveway or other permit work will be constructed. In the event the applicant leases the property to be served by the driveway, the lease should be for a period of at least three (3) years; otherwise the permit must be issued to the property owner. In any case, written acknowledgement of the permit work must be obtained from the owner or his/her agent.

In cases where a site with multiple owners is being developed by a single entity under a development agreement, the developer may apply for the permit. A copy of the development agreement between the developer and all affected property owners must be included with the application. The agreement must give responsibility for developing all affected driveways to the entity that is making application.

When application is made by an agent of the owner or if the owner is a partnership or corporation, written authorization allowing the agent to act on behalf of the owner must be provided by the applicant.

2.1.2 Permit Forms

Application for the various permits must be made on the appropriate form:

DOT 7410 – SPECIAL ENCHROACHMENTS,
DOT 7410 A – SPECIAL ENCROACHMENT FOR LIMITED LANDSCAPING
DOT 7412 – DRIVEWAY PERMIT
DOT 7414 – TEMPORARY CONDITION
DOT 7416 – BUS SHELTER BENCH ENCROACHMENT
DOT 8413A – UTILITY ENCROACHMENTS

Residential driveway applications can be obtained from the appropriate Area Office. All other permit forms will be provided by means of GPAS AMPS before/during to the applicant after plans are submitted to the District Permit Engineer.

Special encroachments are generally improvements required in the right-of-way to accommodate a development that must be made within the right-of-way. An example would be additional lanes added to an existing intersection.

Temporary Condition Permits are typically driveways constructed to perform logging operations or another short duration activity such as construction entrances.

Bus Shelter Bench Encroachment Permits are requested for shelters or benches located at designated bus stops for the convenience of passengers of public transportation systems owned and operated by governmental units or public authorities. (Refer to Policy 6755-10 – Procedures for Permitting Bus Shelters on Right-of-way of Public Roads).

The applicant is asked to complete the "Permit Application Information Sheet" and submit the form along with the first submittal of the plans for review. A copy of the Information Sheet is contained in Appendix B.

Utility Encroachments Permits are generally required of utility companies to install, relocate, or adjust utilities within the right of way. The applicant is required to coordinate with the utilities affected by the driveway work for proper submittal of the appropriate Utility Encroachment Permits. The first submittal of the plans must show the existing and proposed utility facilities. Any review letters stating "no conflict", "no facilities", "existing easement", etc. must be submitted on utility company letterhead. These permits are acquired from the district utilities office. A separate utility permit is required for irrigation sleeves proposed under existing roads.

2.1.3 Preliminary / Conceptual Site Plan

For large developments and any location where a property has or will be subdivided, the applicant's engineer is encouraged to meet with the District Traffic Operations Office early in the plan development process. Refer to Georgia Code §32-6-151 for regulations regarding planning commission requirements for approval of subdividing property. A preliminary site plan is helpful to facilitate the exchange of information so the District Permit Engineer can see the intent of the applicant. The preliminary site plan will also be useful in discussing the relevant requirements of these regulations.

2.1.4 Overall Site Plans

Overall site plans are very beneficial in preliminary site planning. Applicants are encouraged to consult their engineers and site designers to develop overall site plans. The site layout should have a central access point(s) to the overall development and access points connecting to alternate or adjacent roadways in order to equally distribute site traffic. The development should provide interior circulation which is set back from the state route where it connects to the main driveway intersecting the state route in order to prevent operational problems at the driveway. Refer to section 3.1.3. The overall site plan approved will provide access to the entire site. No future driveways onto the state route will be permitted to individual lots. Future driveways will only be considered if they meet requirements.

2.2 Performance Bonds

Each applicant will provide a performance bond or letter of escrow to assure that the authorized work is accomplished in accordance with the approved permit. In cases of noncompliance, the bond will be used to offset the cost of correcting or removing uncompleted or unauthorized work, and to offset the cost of any damages incurred by the Department or other parties as a result of the work or activities of the applicant in relation to this permit.

The amount of the bond or letter of escrow is based on the estimated current construction costs as determined by the Department, shown in Table 2-1. A bond may be underwritten by a company housed outside of Georgia.

Blanket performance bonds are acceptable. The amount of the bond will be based on the construction estimates shown in Table 2-1, and the estimated number of permits to be requested statewide during the active period covered by the blanket bond. The blanket bond must contain the name of the owner or entity that is making application for permit. If the site is being developed on behalf of more than one owner under a development agreement, the surety must be in the name of the developer making application. The Department will allow the use of a Letter of Credit/ LOC if provided in a format preapproved by the Department. A copy of the most current format is available from the District Operations Engineer.

Posted Speed Limit	Number of Turn Lanes*	Roadway Type**	Calculated Cost	Minimum Bond amount ***
<=35	one	rural	$34,263	$40,000
<=35	one	urban	$53,238	$60,000
<=35	two	rural	$64,890	$70,000
<=35	two	urban	$83,865	$90,000
40-45	one	rural	$44,143	$50,000
40-45	one	urban	$63,118	$70,000
40-45	two	rural	$98,975	$100,000
40-45	two	urban	$117,950	$120,000
50-55	one	rural	$51,553	$60,000
50-55	one	urban	$70,528	$80,000
50-55	two	rural	$119,722	$120,000
50-55	two	urban	$138,697	$140,000
>=60	one	rural	$61,432	$70,000
>=60	one	urban	$80,407	$90,000
>=60	two	rural	$145,410	$150,000
>=60	two	urban	$164,385	$170,000
Add $120,000 to Bond if new signal, add $60,000 for existing signal modification				

* For multiple driveways, add the bond amounts for each drive

** Urban = with curb and gutter; Rural = Paved or graded shoulders

***Bond amount may be increased at the District Engineer's discretion

Table 2-1 Performance Bond Amounts

For locations where no turn lanes will be constructed for a Special Encroachment Permit review, the bond amount will be ½ of the minimum bond amount, or higher depending on the scope of the work, as determined by the Traffic Operations Manager.

2.3 Plan Requirements

The applicant must submit appropriate plans with the permit application by means of GPAS AMPS. Plans must conform to the minimum guidance described herein. In addition, the applicant's engineer shall also use his/her judgment to prepare plans that conform to accepted guidance including but not limited to the most current edition of *A Policy on Geometric Design of Highways and Streets* published by the American Association of State Highway and Transportation Officials (AASHTO Green Book) and the GDOT Design Policy Manual. If smaller developers wish to hand-draw their plans, this will be acceptable by the Department; however if any plans are drawn by an engineer, the engineer must be a professional engineer.

When submitting plans for review, the applicant must provide two (2) sets. This may include plans with 24" x 36" sheet size or smaller or an electronic copy for conceptual review. When submitting final plans, the size will be the following to the discretion of the District:

- Provide two sets of 24" x 36" sheet size plans for larger developments
- Provide two sets of 11" x 17" sheet size plans for smaller developments
- Provide an electronic copy that will be submitted/uploaded by means of GPAS AMPS

2.3.1 Plan Checklist

The following checklist contains information that should be shown on plans submitted for Commercial Driveway and Special Encroachment Permit requests. For initial or concept reviews, two sets of plans should be submitted (two sets for requests that include a traffic signal), one copy of the Hydrology Report, and one copy of the Traffic Impact Study, if applicable. Plans should be 24" X 36". The scale of the plans should be 1"= 20'. If a smaller scale is used for overall plans, then enlarged details of the work on the RW must be furnished on a 1"= 20' scale. All sheets should be numbered and dated, with a north arrow:

1. A title block showing the name(s) of the property owner(s) of record as listed on the property deed, the permit applicant, if different from the property owner, and the name of the engineer or individual who prepared the plans. The Land Lot Number, Section Number, Georgia Militia District where applicable, District Number and the county in which the project is located. Contact information should include e-mail addresses for all owners, developers, and the engineer preparing the plans.
2. Location sketch map showing the location of the property in the surrounding area.
3. An overall site plan showing the road name, State Route number, US Route number, names of all nearby intersecting roads, and the posted speed limit.
4. All existing features should be shown with screened line weights or dashed lines and all proposed features shown with solid lines. The designer may also screen existing features for clarity. This should be clearly shown on the plan legend.
5. Any nearby existing billboards must be included on plans.
6. Locations of all traffic signal equipment pull boxes, utility easements, existing above and below ground utilities and the proposed relocations for above and below ground utilities. (All

sheets should include the most current 811 Utility Locate requirement information AND the GDOT call to locate traffic signal and fiber optic equipment.)

7. Location of the R/W line, centerline of the road, all property lines with the names of the property owners on either side of the property being developed, and all existing driveways on both sides of the road.
8. The distance from the centerline of the highway or road to the R/W line at each corner of the property. (A general statement such as "Right-of-Way Varies" is not acceptable.)
9. The distance along the R/W line from the centerline of the nearest named intersecting street to the property corner and the total property frontage. The total length of frontage of the property owned and, if different, the length of the frontage being developed under the permit.
10. Location of existing and proposed buildings, pumps, signs, grease racks, wash racks, underground storage tanks, etc. The distances between buildings, pumps, signs or any foundations on the property and the R/W line(s).
11. The width of existing and proposed roadway pavements, lane widths, lane lines, striping, pavement markings, RPMs, roadway signs, and direction of travel (using directional arrows) within the lanes.
12. The proposed driveway width, measured either from face of curb to face of curb (GA STD) or from edge of pavement to edge of pavement (GA STD). This measurement shall be perpendicular to the centerline of the driveway at its narrowest point. The intersecting angle of the proposed driveway to the highway centerline
13. The distance from the centerline of the driveway to each property line, measured along the R/W line.
14. The distance between driveways, if more than one driveway is proposed or existing, on both sides of the State Route. The distance to the nearest driveway on the adjacent property in each direction, and the opposite side of the road, measured along the R/W line.
15. The radii of all curves on the proposed driveways measured to the edge of pavement or face of curb.
16. Wheelchair ramps, designed in compliance with *Americans with Disabilities Act* and in accordance with current Georgia DOT Standards, shall be included at all driveways and streets where sidewalk is proposed.
17. Sight distances from each proposed driveway.
18. The proposed deceleration lane, including length of lane, length of taper, width of lane (measured from edge of existing travel lane to edge of pavement or to face of curb).
19. The proposed left turn lane and tapers with lengths and striping.
20. For multi-lane facilities, existing and proposed signing and marking may be on a separate sheet.

21. The difference in elevation between the roadway and the driveway at the R/W line. The slope should not be greater than +/- 6.25%, if practical. There are situations that require greater slopes; these should be examined carefully before approving their use.
22. The distance from the edge of pavement to the center of the side ditch and the direction of the flow of water within the ditch.
23. Existing and proposed contour lines or elevations sufficient to show the natural and proposed drainage features within the property to be developed. This should include the entire adjacent highway R/W and any elevations needed to show how water flows once it leaves the property.
24. Cross sections for extensive grading on the Right of Way.
25. Driveways and any new shoulder work on a tangent section should slope downward and away from the edge of pavement for a distance of at least 12' at a slope rate of 2.08% (1/4" per foot), generally, including any deceleration lane. If located in a super-elevated section, all construction should match the super-elevation for at least 12'. Shoulder cross slopes (behind curb and gutter) shall not exceed 2.08%.
26. The location and size of any existing and proposed side drain or cross drain culverts, catch basins, detention ponds, pipes, etc. and direction of flow within the structure(s).
27. Location, size, type, inverts and direction of flow of any proposed pipes or culverts, detention ponds, catch basins, inlets, etc. All pipes 48" and larger must have an inlet and an outlet headwall. Only safety headwalls are allowed on the RW. All pipes on the RW up to 48" must have GDOT STD Safety End Sections. If located outside the clear zone or behind guardrail, standard flared end sections may be used.
28. All structures which are to be extended must be extended in like kind. All drainage structures within the RW must be concrete or HDPE if approved by the Area Engineer. If additional fill is to be placed over an existing structure, the structure must be analyzed for strength to carry the additional load. Pipes and structures on the permit may match an active DOT construction project.
29. Drainage computations for all drainage structures including any existing structures which are to be extended. All drainage computations must show the drainage area, runoff coefficients, time of concentration, and discharge for the required storm frequency. These computations must be in a report format and show high waters above the inlet of the pipe or above the flow line of the grate. All structures must have computations for inlet and outlet control and should include pre and post development runoffs. The post development runoff rate must not exceed the pre development runoff rate.
30. Ditches should be designed to carry the design year storm, with erosion protection provided for a 10 year storm.
31. Driveway and side drain pipes should be designed for the 25 year storm unless a pipe emptying into the ditch leading to the driveway pipe is designed to carry a lesser frequency.
32. Open ended DOT cross drain structures which must be extended should be designed for the 50 year storm with no overtopping occurring during the 100 year storm.

33. On site detention pond designed for the 10 year storm, with computations, unless local jurisdictions require a lesser frequency.
34. On site detention pond outlet structures, including spillways, designed for the 100 year storm, with computations, unless local jurisdictions require a lesser frequency.
35. Curb inlets and grated inlets should be designed for the 10 year storm, except low points which shall be designed for the 50 year storm.
36. Erosion Control Plan.
37. Roadway Typical Section.
38. Suitable photographs of the site showing all existing features may be required for proper review of the application.
39. For requests that include landscaping, a separate plan showing the botanical name, size and distance from the travelway of any trees, shrubs, or herbaceous perennials proposed, existing plant material and structural elements on the site. A R/W Mowing and maintenance agreement is required for the applicant to maintain plantings on the R/W.
40. For requests that include tree removal, an inventory of any tree 4 inches or greater in diameter and a total of the combined caliper inches of all the trees proposed for removal. Removal within buffers of state waters is not allowed.
41. For request that include proposed landscaping or mitigation for approved vegetation removal, a separate plan that shows the location, distance from the travelway, size, quantity, and common botanical names of any proposed trees, shrubs or other vegetation; planting details 6755-9 Policy for Landscaping and Enhancements on the GDOT Right of Way. Contributory Value Fee will be requested for the removal of vegetation necessary for driveway access construction.

    For requests that include irrigation, a separate plan which shows the location, size, type and direction of spray of any irrigation lines and heads proposed on the R/W, the location of electronic valves and the location of a manual shut off valve behind the R/W line. Irrigation lines on the R/W must be wrapped in metallic tape during installation. Avoid placing irrigation main feeder lines on the rights of way. An Indemnity Agreement must be signed by the property owner for all irrigation systems installed on the R/W.
42. Signal plans are required if the development is at or near a signal.
43. Permits that disturb over 1 acre require a MS4 permit, if located inside an MS4 area.
44. An Intersection Control Evaluation (ICE) must be done if there is a new intersection or an update to an intersection. (Refer to the ICE Policy)

2.4 Traffic Impact Studies

The applicant is encouraged to conduct traffic studies as needed in order to identify geometric and operational facilities that will be needed to satisfy the access/egress requirements of the site. The Department may require a traffic impact study for any site estimated to generate more than 500 gross daily trips using ITE Trip Generation Rates, or along corridors with substantial existing development and/or adjacent to a State Route with an existing ADT greater than 25,000 vehicles

per day. The Department may require impact studies in other cases as deemed necessary or an alternative method such as the Intersection Control Evaluation (Refer to the ICE Policy). The studies may recommend alternative access configurations such as roundabouts or signalization. For studies considering these alternatives, the study should include analyses of both configuration alternatives with respective efficiencies of each. The study should recommend a preferred configuration based on analysis. Recommendation of final access configuration should consider types of traffic control at adjacent intersections for corridor consistency.

All traffic impact studies shall be conducted under the supervision of a Professional Engineer licensed in Georgia and all such reports shall be stamped and signed by the engineer. All traffic impact studies shall contain a **Certification** page, as shown in Appendix D. The certification should appear immediately behind the report cover.

The engineer must certify whether the proposed development, as shown in a preliminary site plan to be included with the impact study, conforms to the spacing and geometric design criteria as specified herein. If the proposed development does not comply, the traffic engineer should indicate the reasons for nonconformity and the Department may consider allowing the noted exceptions.

2.5 Permit Procedures

The plan review and application process is initiated when the applicant or their engineer submits plans for review. For commercial driveways and special encroachments, the plans are submitted to the District Traffic Engineer/Manager by means of GPAS AMPS.

During the plan review and application process, the District Permit Engineer will notify the applicant or their agent of any studies or documents that may be required for permit approval. These documents may include, but not limited to the following:

- Traffic Impact Study
- Intersection Control Evaluation (ICE)
- A copy of the property owners Warrantee Deed
- Lease Agreement
- Right of Way Deed
- Right of Way Mowing and Maintenance Agreement
- Indemnity Agreement
- Radius Encroachment Agreement

The applicant or their agent must supply all required documents, signed application and approvable plans to the District Permit Engineer prior to receiving approval for the requested permit.

For permit requests that include turn lanes, roadway widening, or sidewalks, additional right of way may be necessary to accommodate these improvements. If the additional right of way is not dedicated to the Department, the portions of roadway or sidewalks remaining not within the rights of way will become the responsibility and liability of the property owner and shall be acknowledged in writing as such. When a right of way deed is necessary to incorporate the improved area into the

roadway system, the applicant shall provide the necessary documentation to verify and transfer clear title to the Department in the following manner:

1) **Preliminary Title Report/Certificate (P.T.C.)** – applicant prepares OR hires someone to prepare a P.T.C., listing legal owner(s) name(s) of record, any outstanding liens, defects, etc. against the title, if any.
2) **ROW Deed** – GDOT District Traffic Operations Engineer prepares ROW deed and has owner to prepare plat; Dist. Traffic Ops has a Dist. ROW team member to review for accuracy the ROW deed and legal description. Applicant is responsible for executing ROW deed accurately based on P.T.C. and obtaining any Q.C. deeds necessary to clear title of ROW to be donated to GDOT so GDOT will have clear title. Applicant is responsible for getting deed recorded and having original sent to GDOT Dist. Traffic Ops for them to forward on to ROW Plans Office.
3) **Final Title Report/Certificate (F.T.C.)** – Applicant prepares OR hires someone to prepare a F.T.C., listing GDOT as owner and with any releases or Q.C. deeds that were obtained, attached.
4) **Permit Issuance** - After Final Title Report/Certificate is prepared and shows GDOT has good title, the permit can then be issued.

During the review process, when final approval of the permit is made, the applicant will receive an email of final approval and an original Performance Bond form, and information regarding any Contributory Value Fee required if tress are to be removed from the R/W for construction. The letter will include instructions on how to proceed with completing and submitting the Performance Bond, and other payments of fees, if necessary. Once the applicant has furnished the completed Performance Bond and documents, the Area Engineer will issue the applicant's copy of the approved permit plans and permit poster. At that time, a preconstruction meeting shall take place with the Area Engineer and the applicant; and/or contractor.

The contractor is required to notify the Permit Inspector when the work will begin and when the work is complete. The work must be completed to the satisfaction of the Inspector before the project can be accepted and the bond is released. The project must be constructed according to the approved permitted plans. If during the construction of the work, questions arise or unforeseen conditions are encountered, the contractor shall contact the Permit Inspector for consultation. The Permit Inspector will require "as-built" drawings if significant modifications are approved in the field. The Permit Inspector shall not change design without first consulting the District for review and approval.

2.5.1 Department Approval

Department personnel will accomplish the processing of permits in an expeditious manner. The District Traffic Engineer/Manager will be the primary point of contact for permits. The goal of the Department is to review and approve a permit within 45 working days after receiving all required information and 5 days for corrections to be made. The District Traffic Engineer will be available for advice and guidance, if needed. The District Utilities Engineer will review all utility facilities shown on the plans and Utility Encroachment Permits or "no conflict", "no facilities", "existing easement" letters and approve or disapprove within 5 working days after receiving an acceptable submission from the District Traffic Engineer/Manager.

If the permit site is adjacent to a two-lane road or a multi-lane or divided highway, the District Engineer or their designee may approve or disapprove the permit. In the event that the commercial driveway permit does not meet the spacing and turn lane criteria in Chapters 3 and 4, the District Traffic Engineer, may consult with the District Engineer prior to approving the permit and a completed and approved form, APPENDIX F, included in the file.

All permit requests on highways that are within an active GDOT improvement project or a project that is in the plan development process shall be reviewed by the appropriate design or construction office before the permit is approved.

In the case of projects not on the State Highway System or not located on State owned rights-of-way, but for various reasons the Department is monitoring the project through preconstruction and acceptance, the Department will review the driveway request and make known to the local government under what conditions the plan would be acceptable to the Department. On all construction projects, which are monitored by DOT, on R/W owned by a local government, the Department shall approve or deny any access request with a letter to the local government.

2.5.1.1 A Median Opening Approval

The Director of Operations and the State Traffic Engineer or their designee shall approve all requests to construct new median openings or to relocate existing openings. Before an opening or relocation can be granted, an Intersection Control Evaluation (ICE) must be done by the applicant's engineer before to GDOT. If the permit site is adjacent to a limited access highway, or involves a Limited Access fence, the DOT Commissioner shall approve or disapprove the permit.

If the applicant or his/her engineer has submitted plans that do not comply with the median opening spacing and other geometric design guidance of these regulations, they may request a variance in writing, stating the reason and evidenced with supporting data. The Department may consider granting an exception if the exception is in the best interest of the general use of the highway facility.

2.5.1.2 Intersection Control Evaluation (ICE)

In cases where the traffic impact study or an alternative method such as ICE indicates that a particular median opening is the preferred configuration, the proposed design and a copy of the study shall be sent by the district to the State Office of Traffic Operations for review and approval before a permit is issued. A review may be beneficial to ensure the design meets the most current standards. (Refer to the ICE Policy)

2.5.1.2.1 Roundabouts

A modern roundabout is a full access type of circular intersection characterized by channelized approaches, yield control at entry, counterclockwise circulation around a central island, and geometric features that create a low-speed environment. Roundabouts have been demonstrated to provide a number of safety, operational, and other benefits when compared to other types of intersections. Specifically, they have fewer conflict points, compared to conventional at-grade intersections, lower speeds, and have been found to reduce crashes, crash severity, traffic delays, fuel consumption, and air pollution.

2.5.1.2.2 Reduced Conflict U-Turns (RCUT)

A RCUT is a partial access intersection that reduces crashes by changing how minor road traffic crosses or turns left at a major road reducing the potential conflict with other vehicles. At a RCUT, minor road traffic must turn right. Left turn and through movements from the minor road are accomplished through the use of a downstream U-turn. All movements (left, through, and right) are allowed from the major road.

2.5.1.2.3 Continuous Flow Intersection (CFI)

Continuous flow intersection is a full access type of intersection that relocates the left-turn movement on an approach to the other side of the opposing roadway, which consequently eliminates the left-turn phase for this approach at the main intersection. Traffic that would normally turn left at the main intersection first crosses the opposing through lanes at a signal controlled intersection several hundred feet upstream of the main intersection. Left-turning vehicles then travel on a new roadway parallel to the opposing lanes and execute the left-turn maneuver simultaneously with the through traffic at the main intersection. Traffic signals are present at the main intersection and at the locations of the left-turn openings.

2.5.1.2.4 Continuous Green-T (CGT)

Continuous Green-T is a full access intersection that is an alternative to conventional signalized T intersections. CGT intersections are characterized by a channelized left-turn movement from the minor street approach onto the mainline or major street, along with a continuous mainline through movement that occurs at the same time. The continuous-moving through lanes are not controlled by a traffic signal phase, while the other intersection movements are controlled by a three-phase signal. The through lanes on the mainline that have continuous flow typically contain a green through arrow signal indicator to inform drivers that they do not have to stop. The continuous through lanes are often separated from the left-turn and merge lanes with delineators, raised islands, pavement markings, or other separations.

2.5.2 Traffic Signal Permits

Traffic signal operation may be needed to safely and efficiently accommodate the access requirements for some developments. Since the type of traffic control affects the pavement marking design and sometimes the geometric design of an intersection, it is necessary to coordinate driveway permits with signal permits. A signal permit request should be submitted through GPAS based on Policy 6785-1 -Traffic Signals. The recommended minimum spacing for traffic signals is 1000 feet (see Table 3-3).

The Department strives to be as responsive as possible when processing permits and allows many driveway applications to be approved at the District level. However, all traffic signal permits are reviewed by the State Office of Traffic Operations by ways of GPAS SPA (Refer to the Signal Permitting Application Tutorials) and must be approved by the Chief Engineer (for new permits) and the State Traffic Engineer (for permit revisions). For this reason, a driveway permit having pavement marking and geometric features requiring signalized operation should not be issued until the traffic signal permit has been approved or denied.

2.6 Conditions Placed On Permits

The conditions enumerated in this section will be placed on the applicant as part of the application. These conditions to the permit continue to be in effect unless changes are made or authorized by the Department.

Violation of the conditions specified in a permit and in these regulations shall be ground for revocation of the permit. If necessary, the Department has the authority to remove a driveway constructed in violation of the permit and to restore the right of way. The cost of this work will typically be collected from the applicant or by using the performance bond, escrow, or letter of credit.

2.6.1 General Restrictions

1. No driveway approach or other improvement constructed on DOT R/W, as an exercise of the permit shall be relocated or have its dimensions altered without the written permission of either the District Permit Engineer who approved the permit or a higher authority within the Department. A correspondence from the engineer approving the change must be sent to the applicant and all who received a copy of the original permit.
2. Parking is prohibited on DOT R/W except in downtown areas where parallel or angle parking is provided by the city, by ordinance and in compliance with the following:
   - O.C.G.A. 32-6-2, 40-6-200
   - 40-6-202 or 40-6-204
   - In those instances where a Temporary Conditional Special Encroachment Permit is approved for parking on the R/W. When approved by GDOT, excess R/W may be leased for parking at the current property value rate.
   - Areas within the frontage should not be provided within the GDOT R/W for purposes of parking loading, servicing, etc.
3. Geometric and safety requirements shall be maintained as stipulated in the permit and shall not be altered by the applicant.
4. The applicant must take possession of an approved permit within 60 days of approval. If not, the permit will be canceled after 90 days. If the applicant is non-responsive during the permit approval process, the permit request will be canceled.
5. Work under the permit shall begin within 90 days after approval. Failure to begin work can result for the permit to be canceled.
6. Construction work authorized by an approved permit shall be completed within twelve (12) months following approval of the permit. Permitted work not completed within twelve (12) months, for just reasons, may be officially extended, by the District Engineer, for an additional six (6) months. Additional permit extensions may be granted with sufficient cause by the District Engineer on an individual basis. If the permitted work is not completed in compliance with the terms, action will be taken to secure the bond or Escrow in order to complete the work to Department standards, or remove the uncompleted work and restore the R/W.

7. Once a permit has been canceled or voided, it cannot be reactivated or reinstated for any reason. A new permit must be submitted when the applicant is ready to begin work. This also includes the appropriate number of copies of up-to-date plans and all related documentation needed to review the application. This is necessary because when a permit is canceled, the file released from the system and placed with permits that have been completed. If applicant wishes to resume, apply for a new permit.
8. New driveways to new businesses should not be opened for use by the traveling public until the final inspection, release of any bond or escrow, and approved by the District Permit Engineer or designee.
9. It is the responsibility of the applicant to complete all work conflicted within their right-of-way of routine maintenance. Maintenance or all work of the side drain pipe installed by the permittee will be their responsibility.
10. Permits that include vegetation removal require mitigation. (Refer to Policy 6755-9 - Policy for Landscaping and Enhancements on GDOT Right of Way).

2.6.2 Liability and Responsibility of Applicant

Applicants will be required to submit a Hold Harmless Agreement before the permit is approved by means of GPAS AMPS. A copy is provided in Appendix E. The applicant is responsible for the following:

- Relocation, adjustment or removal of all utility conflicts within the development area at no cost to the Department or the State.
- All traffic control devices including signs and traffic signal equipment relocated in compliance with the access permit will be completed at no cost to the Department. The Department requires the applicant to contact the Utilities Protection Center (UPC) for “Design locate requests” which aids in the location of existing utility facilities for pre-design, advance planning purposes, or bidding.
- The applicant is required to contact the District Traffic Operations Office to locate existing traffic signal equipment within the area of the access permit. Excavators shall contact the UPC in accordance with the Official Code of Georgia Annotated 25.9, before commencing excavation activities. Applicants or their contractors must notify the appropriate Area Office prior to beginning work on the right of way.
- The applicant must move, relocate or remove any installation or construction placed on GDOT R/W without cost to the Department or the State when instructed in writing to do so by the Department.
- Applicant must remove all longitudinal pipe under any proposed deceleration lane. If necessary, the applicant's performance bond or letter of escrow will be used to accomplish this work.
- When determined necessary by the Department, the applicant must exhibit satisfactory evidence of adequate liability insurance to cover all aspects of the work specified under the permit for protection of the traveling public. Limits of such coverage shall be determined separately for each applicant and declared by the Department at its discretion.

2.6.3 Ownership of Completed Work

A median opening constructed under a Special Encroachment or Commercial Driveway Permit becomes a feature of the highway and the unconditional property of the Department. The permit applicant or property owner(s) and/or lessees adjacent to the R\W at the opening site retain no ownership or legal interest therein. The Department reserves the right and all authority to close, relocate or remove an opening when such action is deemed necessary in the interest of public safety or efficiency of the roadway.

2.7 Department's Responsibilities

Each District is responsible for competent and adequate inspection of permit work and inspectors are assigned as required. The District Traffic Engineer/Manager shall maintain a permit file for each permit. This file shall contain a completed application package, copies of the executed Maintenance Agreements, copy of appropriate correspondence, and copy of bond and Notice of Completion/Acceptance of Work. When the work is completed, the District Engineer will approve the acceptance of the work. Throughout the construction, the assigned permit inspector shall inspect the progress of the permitted activities to ensure completion of the work on a timely schedule. The District shall ensure by inspection that all aspects listed in the application and plans are adhered to.

All correspondence with the permittee shall be copied to the District Traffic Engineer/Manager. No alterations of the plans shall be allowed.

Chapter 3. Spacing of Driveways - Contents

Chapter 3. Spacing of Driveways - Contents 3-i
3.1 Spacing of Driveways 3-1
3.1.1 Spacing of One-Way Driveways 3-1
3.1.2 Placement of Driveways 3-2
3.1.3 Placement of Interior Driveways 3-3
3.2 Driveway Alignment 3-4
3.3 Spacing of Median Openings 3-5
3.4 Spacing of Signalized Intersections 3-6
3.5 Sight Distance - Without Medians 3-6

Chapter 3. Spacing of Driveways

3.1 Spacing of Driveways

As drivers approach each intersection along a roadway, they are often presented with decisions and may be required to stop or make various maneuvers. When exiting the roadway, it is necessary to decelerate and in some cases, to change lanes. It may also be necessary to adjust speeds in reaction to other vehicles entering into the arterial traffic stream. Driveways should be spaced so that drivers can perceive and react to the conditions at each intersection in succession. Spacing between driveways should be at least equal to the distance traveled, at the posted speed limit, during the normal perception and reaction time plus the distance traveled as the vehicle decelerates to a stop. Each driveway or intersection also requires storage space for vehicles waiting to enter. The distance between intersections should be long enough to provide this storage, allowing each intersection to have its functional boundary separated from those of the next intersection. Crash data also indicate that as the number of driveways along a roadway increases so do accident rates. **This is based on the TRB Access Management Guide. Meeting the spacing criteria is not, in itself an indication that driveways or additional driveways will be allowed for a site. Alternative access routes are recommended. Side street access is deemed as "reasonable access".**

Guidelines for driveway spacing, associated with the construction of new driveways, are provided in Table 3-1. Driveways should be separated from any other facility, which accesses a State Highway, whether it is another driveway or a public street. Minimum spacing requirements should also apply to driveways on the opposite side of undivided roadways. Variances are defined in Section 2.5.1**. Requirements for the length of right and left turn lanes will dictate driveway spacing as shown in Table 4-8 and Table 4-9, and may increase the minimum allowable spacing shown in Table 3-1**. This table is based on the width of the radii.

3.1.1 Spacing of One-Way Driveways

A driveway pair must be separated from another driveway pair by the distance as shown in Table 3-1. A driveway pair must also be separated from an adjacent two-way driveway in accordance with the spacing criteria in Table 3-1.

Figure 3-1 shows a typical layout of one-way driveways. The spacing criteria presented in Table 3-1 does not apply to the distance between the two one-way driveways (driveway pair).

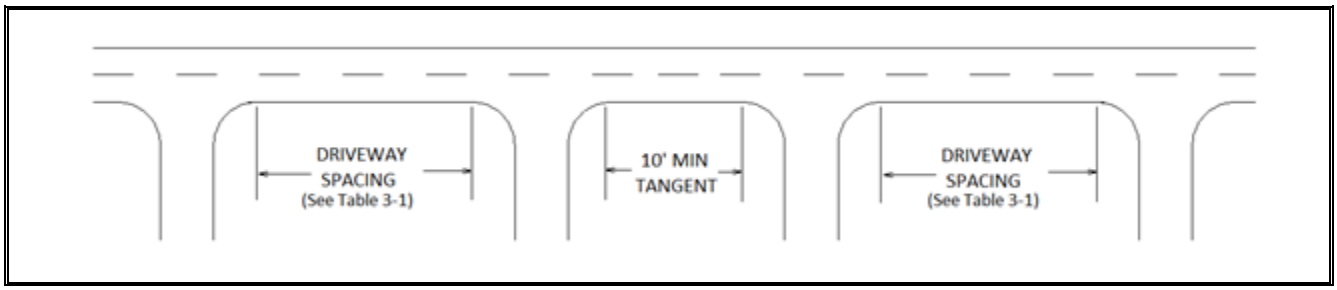

Figure 3-1 Spacing Criteria for One-Way Driveways

NOTE: For additional spacing details, refer to section 4.9.

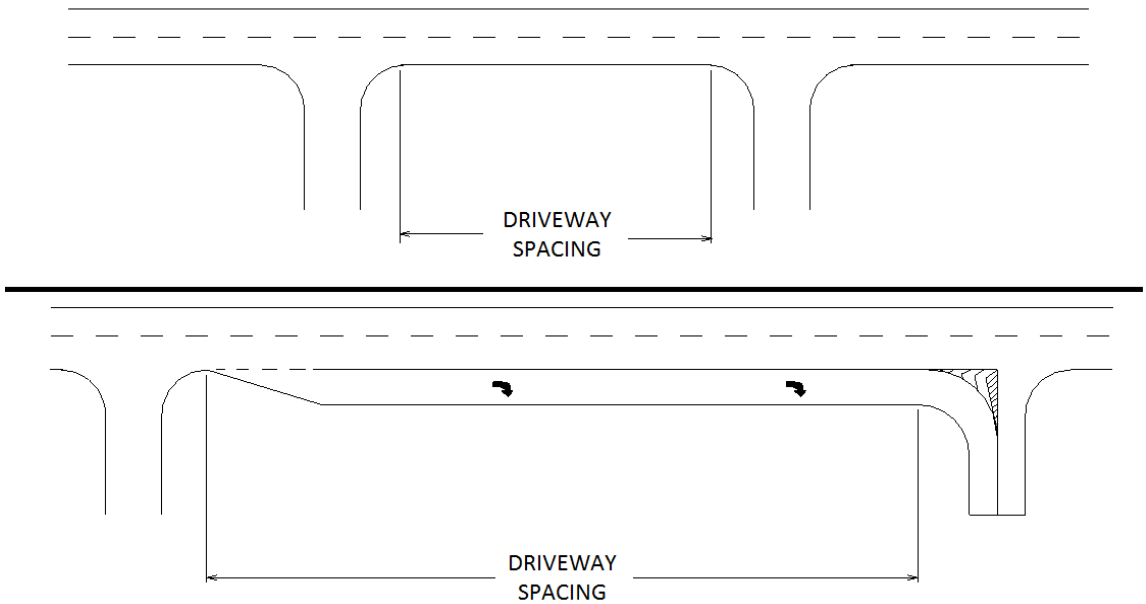

POSTED SPEED, MPH	MINIMUM DRIVEWAY SPACING WITHOUT RIGHT TURN LANE, FT.	MINIMUM DRIVEWAY SPACING WITH RIGHT TURN LANE, FT.
25	125	125
30	125	125
35	150	150
40	185	185
45	230	230
50	275	275
55	350	350
60	450	450
65	550	550

Table 3-1 Spacing Criteria for Driveways, Public Roads and Side Streets

3.1.2 Placement of Driveways

Not only must driveways be spaced from other driveways as provided above, they must also be located a minimum distance from the property line.

When driveways are to be jointly used by two or more property owners, the property line separation requirements given in the above paragraph can be waived. However, a joint use agreement signed by the affected property owners must be provided to the Traffic Engineer. Either property owner may apply for the driveway permit. Refer to section 3.2 (Driveway Alignment).

3.1.3 Placement of Interior Driveways

The placement of the first interior drive which intersects the driveway from the State Route should be as far as possible from the State Route for safe, more efficient operation. The distance between the roadway traffic and the first internal movement shall be a minimum of 200 feet, as shown in Figure 3-1.2. Lots less than 500 deep should maintain, a minimum distance of 100 feet. The distance required should be maintained or increased so as to avoid interference with the mainline traffic flow for large sites with high volumes, heavy truck traffic, and on high volume roadways.

If no other design alternatives exist and interior drives are proposed which do not meet minimum spacing, the left turning movement should be restricted with a raised barrier. Site planning should be done such that Interior Driveways accommodate the right of way at least 100 feet of storage.

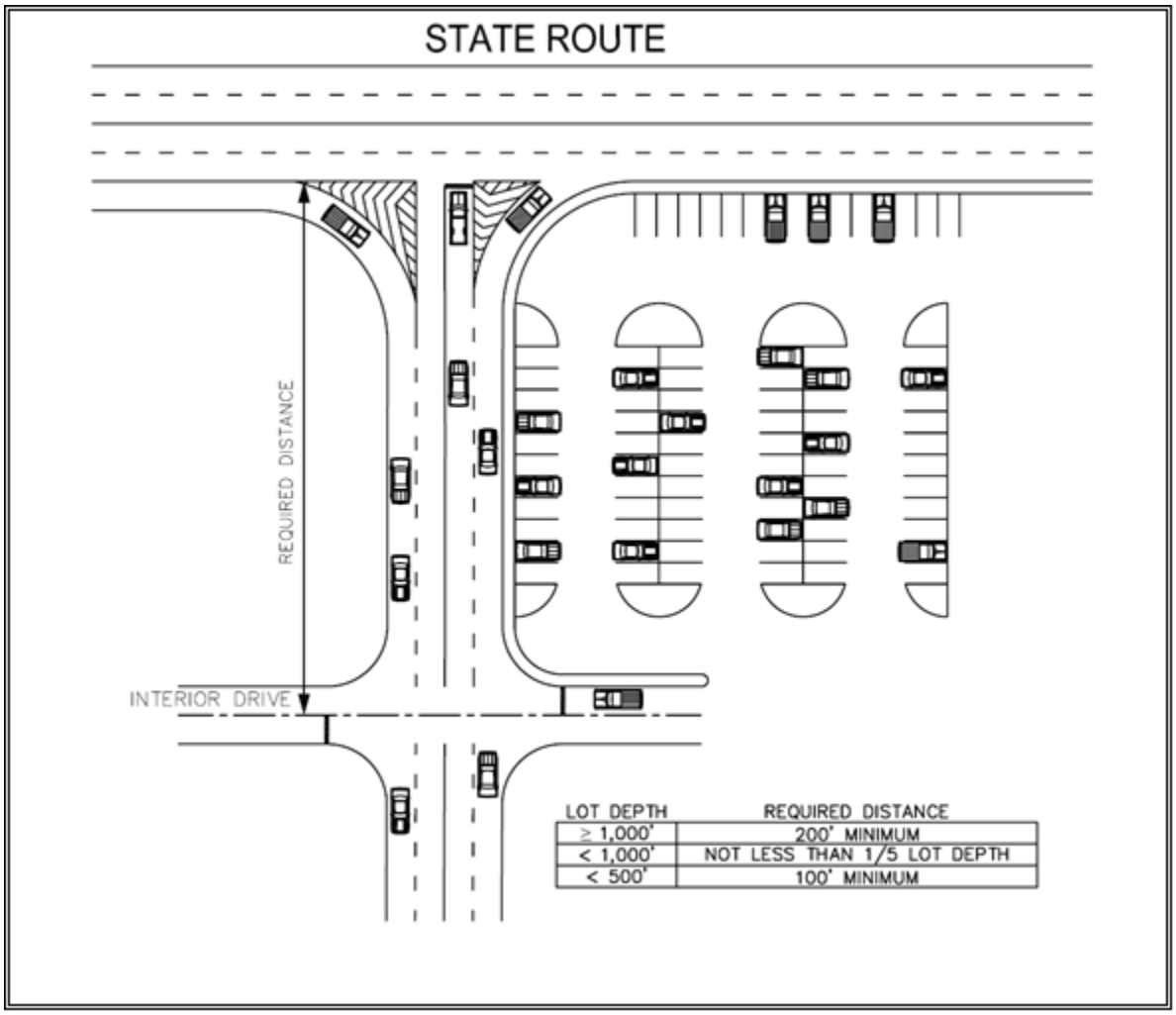

Figure 3-1.2 Placement of Interior Drives

3.2 Driveway Alignment

Driveways should align with other driveways located on the opposite side of the State Highway. If offset driveways cannot be avoided, the same driveway spacing criteria as given in Table 3-1 should be provided, to provide space for left turns. Figure 3-2 shows how the spacing is measured for spacing offset driveways onto undivided highways. Spacing is from Radius Return to Radius Return.

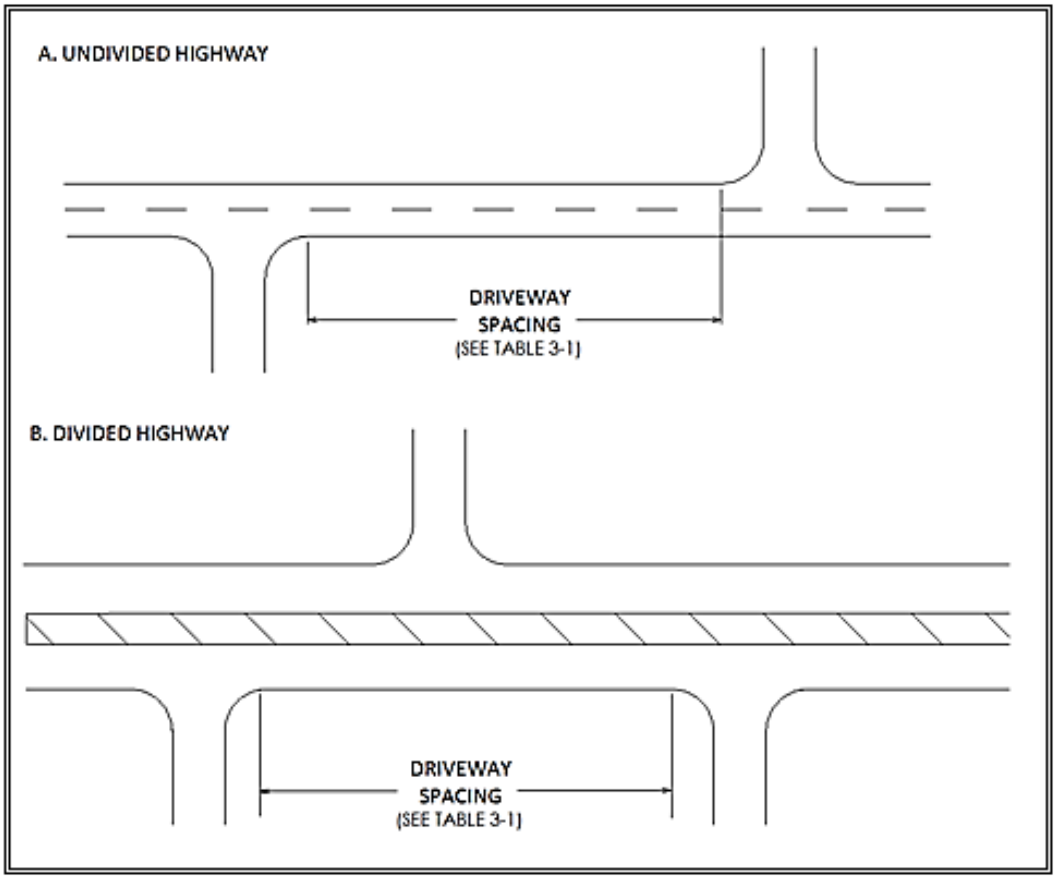

Figure 3-2 Spacing of Offset Driveways

If the State Highway involved is a divided facility and the driveways do not align with a median opening, the driveway spacing would only apply to the adjacent driveway located on the same side of the Highway as shown above in Figure 3-2 (B).

3.3 Spacing of Median Openings

When the applicant is requesting a median opening on a divided highway, the spacing standards shown in Table 3-2 apply.

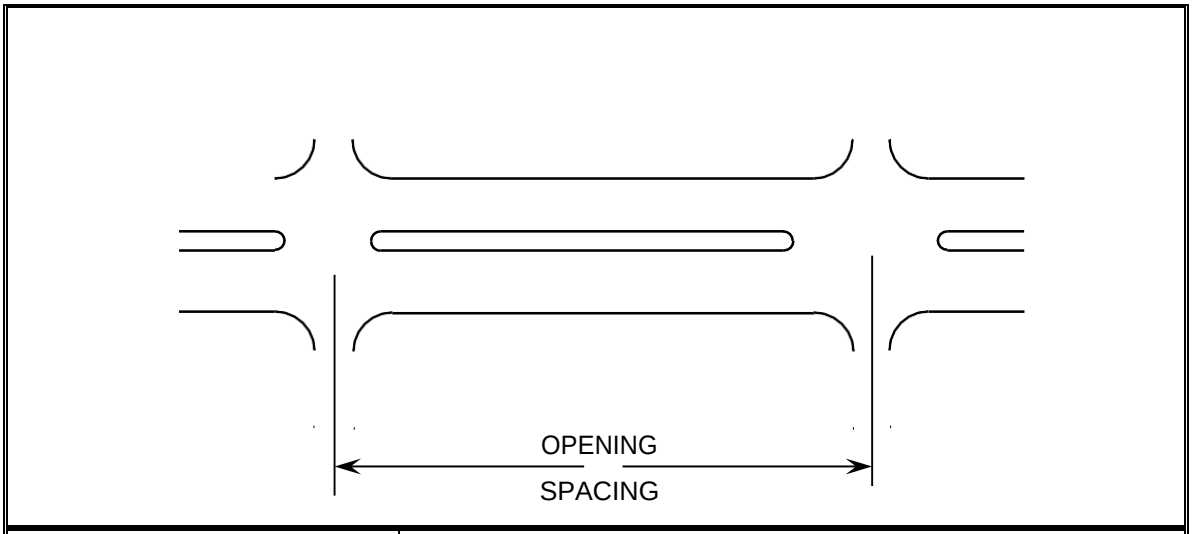

ROADWAY TYPE	OPENING SPACING, FT.	
	DESIRABLE	MINIMUM
RURAL	2,640	1,320
URBAN	1,320	1,000

Table 3-2 Spacing of Median Openings

The following other factors will also be considered, such as:

- Distance to other median openings
- Adjacent land use
- Expected traffic volumes
- Sight distances
- Crash history
- The resulting volume of U-turns that are likely to occur with/without the median opening

Meeting the spacing criteria is not, in itself, an indication that median openings will be allowed. Refer to **GDOT Policy 4A-4** for medians requiring a break in limited access right-of-way. All median openings will be approved by the Director of Operations or their designee for existing facilities.

NOTE: RURAL or URBAN Roadway Sections - refers to characteristics such as typical section, speed limit, density of street and highway networks, nature of travel patterns, shoulder treatment and lane use.

See definitions section for an explanation of "Urbanized" or "Rural".

3.4 Spacing of Signalized Intersections

This section is provided to assist the applicant's engineer in designing sites if signalization is required points of access to the State Highway System. Table 3-3 contains guidelines for the spacing that should be provided between signalized intersections. (Refer to the ICE Policy)

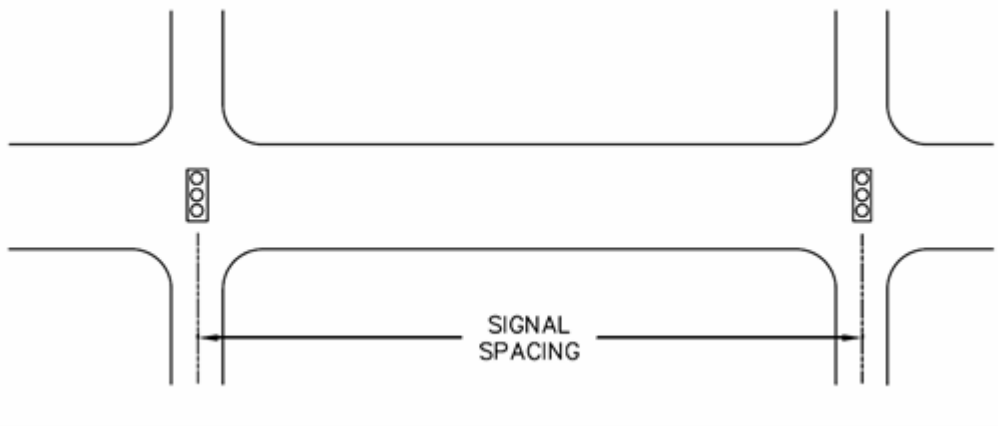

ROADWAY TYPE	SIGNAL SPACING, FT.	
	DESIRABLE	MINIMUM
RURAL	2,640	1,320
URBAN	1,320	1,000

Table 3-3 Spacing of Signalized Intersections

The desirable signal spacing provided above are indicative of conditions that normally offer better signal progression for arterial traffic flow. It is recognized that under certain conditions, better operation may result from the introduction of access points with less spacing if the alternative forces high volumes of traffic to an adjacent intersection. Consideration should be given to developing multiple access strategies to a site including access to adjacent signalized intersections.

When the applicant can show, through an alternatives analysis, that better operations can be achieved with less spacing, the Department will consider an exception to the provisions of Table 3-3.

3.5 Sight Distance - Without Medians

Driveways should be located to provide adequate sight distance. Minimum intersection sight distance criteria are provided in Table 3-4. The line of sight establishes the boundary of a sight triangle, within which there should be no sight obstruction. The sight distance requirements apply even if the intersection has traffic signals.

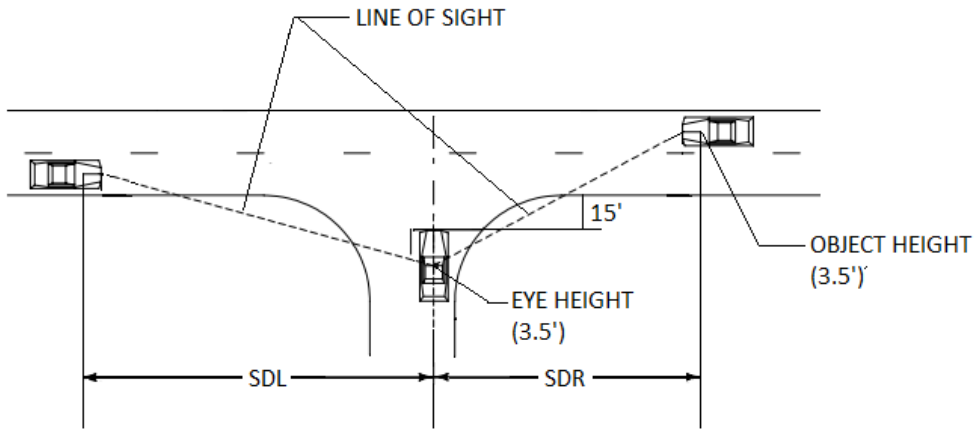

ARTERIAL SPEED (MPH)	SIGHT DISTANCE, FT.*						
	2 Lane	3 Lanes		4 Lanes		5 Lanes	
	SDL=SDR	SDL	SDR	SDL	SDR	SDL	SDR
30	335	310	355	335	375	355	400
35	390	365	415	390	440	415	465
40	445	415	475	445	500	475	530
45	500	465	530	500	565	530	600
50	555	515	590	555	625	590	665
55	610	570	650	610	690	650	730
60	665	620	710	665	750	710	795
65	720	670	765	720	815	765	860

Table 3-4 Intersection Sight Distance Requirements

NOTE: Sight distance chart reflects proposed conditions in addition to auxiliary lanes. Meeting minimum sight distance is mandatory in order to obtain a commercial driveway permit. A signed and dated sight distance certification statement is required on the permitted plans.

The sight distance criteria are based on the time required for a vehicle to make a left turn from a stop-controlled approach to the State Highway (AASHTO Case B1). The time to execute the maneuver is based on recommendations contained in NCHRP Report 383, Intersection Sight Distance. A time gap of 7.5 seconds is used for calculating the sight distance for a stopped vehicle making a left turn onto a two-lane highway with no median and grades 3 percent or less. The time gap is decreased by 1.0 seconds for right-turn maneuvers without undue interference with major road-traffic. The time is increased by 0.5 seconds for each additional lane to be crossed.

The sight distances given in Table 3-4 are for undivided highways. If the highway is divided, the effect of the median should be considered in determining the required sight distance. In very rare cases, where the raised median is at least 40', it may be feasible for the crossing maneuver to be done in two stages with a stop in the median. However, the intersection should only be treated in this manner if the signing and marking is accordingly provided. Otherwise, the sight distance requirements should be increased to account for the additional width that must be crossed. See AASHTO Green Book, Chapter 9 Intersections, for adjustments due to grades greater than 3% and design vehicles other than passenger cars. Sight lines in medians cannot be obstructed with tall

vegetation full to the ground to allow drivers time to anticipate movement of pedestrians and other drivers.

Chapter 4. Design Criteria - Contents

Chapter 4. Design Criteria - Contents 4-i
4.1 Design for Trucks 4-1
4.2 Driveway Width 4-2
4.3 Corner Radii 4-2
4.4 Left Turning Control Radii 4-3
4.5 Median Opening Design 4-3
4.5.1 Type B Median Opening 4-3
4.5.2 Type C Median Opening 4-3
4.6 Horizontal Alignment 4-6
4.6.1 Angle of Intersection 4-6
4.6.2 Alignment of Approach and Departure Lanes 4-7
4.7 Driveway Tie-In Configurations 4-8
4.7.1 Driveway Connections to Urban Sections 4-8
4.7.2 Driveway Connections to Rural Sections 4-9
4.8 Driveway Grades 4-12
4.9 Auxiliary Turn Lanes 4-13
4.9.1 When Deceleration Lanes Are Required 4-13
4.9.1.1 Minimum Requirements for Right Turn Deceleration Lanes 4-13
4.9.1.2 Minimum Requirements for Left Turn Lanes 4-14
4.9.2 Right Turn Lane Lengths 4-15
4.9.3 Acceleration Lanes 4-16
4.9.4 Left Turn Lane Design 4-16
4.9.5 Dual Left Turn Lanes 4-18
4.10 Raised Islands 4-20
4.11 Restricted Movement Driveways 4-23
4.12 Pedestrian Considerations 4-24
4.13 Clear Zone Requirements 4-26
4.14 Pavement Design 4-27
4.15 Right of Way Requirements 4-27

Chapter 4. Design Criteria

The design of driveways shall comply with the guidelines of AASHTO's A Policy on Geometric Design of Highways and Bridges, current edition. However, this chapter provides a summary of the minimum design constraints that will be checked during the plan review process. All modes of transportation should be taken into consideration, cars, pedestrians, bikes and trucks.

For Commercial Driveway Permits, or Special Encroachment Permits which include changes to existing driveways or intersections, an Intersection Control Evaluation (ICE) must be performed and included in the Traffic Study or as a stand-alone study. (Refer to the ICE Policy)

The geometric design of an intersection is a collection of various elements - such as radius, width, grade, angle of intersection, etc, - that in combination provide for satisfactory operation of the vehicles that will use the intersection. Since the operating characteristics vary dramatically for different types of vehicles, the designer must first establish the design vehicle on which to base the design. The designer should also check the final design to ensure the design vehicles can operate satisfactorily.

4.1 Design for Trucks

The design criteria given in this chapter has more stringent requirements for trucks. Even though the general use of such guidance would result in more desirable operations for all vehicles, it is neither practical nor necessary to design all facilities to accommodate trucks. The designer must use judgment in selecting the proper design vehicle.

When semi trailer combination trucks are expected to use the intersection on a regular basis and in numbers more than just an occasional vehicle, then the intersection should be designed to accommodate the truck movements. This includes most driveways designed for industrial use and many commercial driveways.

For commercial uses such as shopping centers, the preliminary site plan should indicate where heavy-duty pavement would be provided to accommodate truck access to loading docks. Any driveway associated with access or egress from the loading docks should use the truck radii. Minor movement driveways, particularly those that allow only right turns will generally only be used by passenger cars.

4.2 Driveway Width

When traffic impact studies are required (see Section 2.4), the driveway should be designed to provide the number of lanes recommended in the study. Standard lane widths are 12'.

When the need for multiple lanes is not established from a traffic impact study, the minimum and maximum driveway widths are as set forth in Table 4-1.

DRIVEWAY USE	WIDTH, FT.	
	MINIMUM	MAXIMUM
Current Residential GA Std.	14	18
Current Commercial (One Way) GA Std	16	20
Current Commercial (Two Way) GA Std	24	40
Mining, Logging, Farming, Agricultural	18	24

Table 4-1 Driveway Widths

NOTE: When a traffic study indicates multiple lanes requiring greater widths, this table does not apply.

4.3 Corner Radii

Corner radii are generally established by the minimum path of the inside wheels of the design vehicle when making a right turn. The minimum corner radii to be used for driveways are given in Table 4-2.

The size of the radius is determined by the development use typical design vehicle.

DRIVEWAY USE	MINIMUM RADIUS, FT.
Residential	15
Commercial	35
When Designed For Trucks	75

Table 4-2 Minimum Corner Radii

4.4 Left Turning Control Radii

The path of the inside wheels during left turns is also important for the design of some median openings and intersections with dual left turn lanes. Table 4-3 contains guidelines for minimum left turning radii.

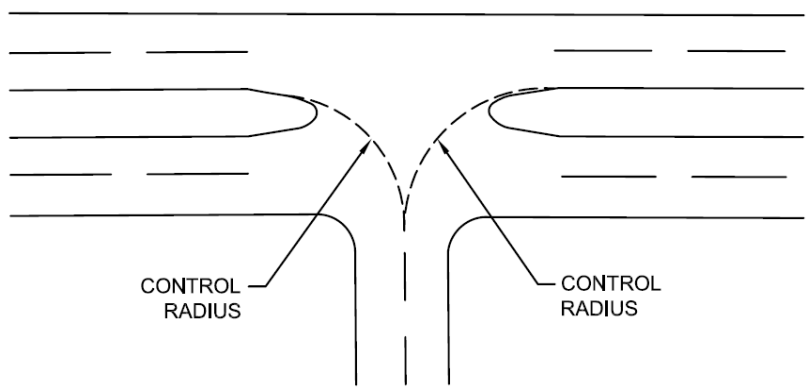

DRIVEWAY USE	CONTROL RADIUS, FT.
RESIDENTIAL	40
COMMERCIAL	50

Table 4-3 Left Turning Control Radius

4.5 Median Opening Design

Driveways onto Divided State Highways where access is to be provided shall be designed in accordance with Georgia DOT Construction Details for Median Openings. The detail has three types of designs that are applicable in different situations.

4.5.1 Type B Median Opening

Type B median openings are required when the projected volume of the left turn movement exceeds 20 vehicles per hour per direction and/or when the median width is sufficient to offset the left turn lane from the adjacent through lane. This design provides better sight distance for vehicles in the left turn lane. This is important for unsignalized intersections and when unprotected turns are allowed at signalized intersections.

4.5.2 Type C Median Opening

Type C median openings are typically used in urban areas where the median width is limited to approximately 24’ or less. With this type of opening, it may be necessary to add pavement to the opposite edge in order to accommodate U-Turns.

Table 4-4 illustrates the minimum pavement width that is required for some vehicles to make U-Turns. The required width is given for passenger cars and for WB-50 and WB-62/WB-67 trucks.

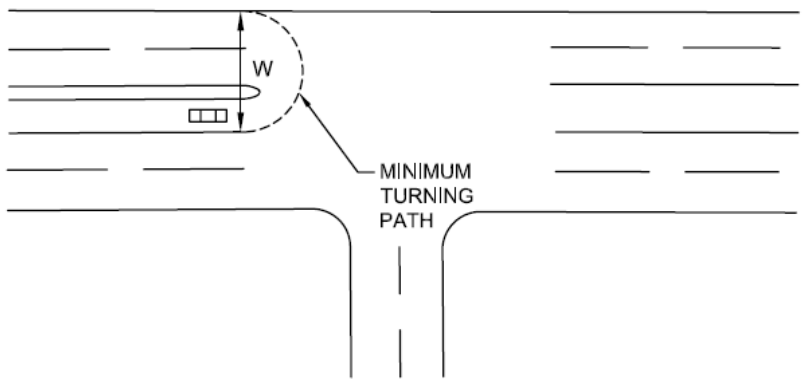

DESIGN VECHICLE	MINIMUM WIDTH (W), FT.
PASSENGER CAR	48
WB - 50 TRUCK	80
WB – 62/WB - 67 TRUCK	90

Table 4-4 Minimum Road Width for U-Turns

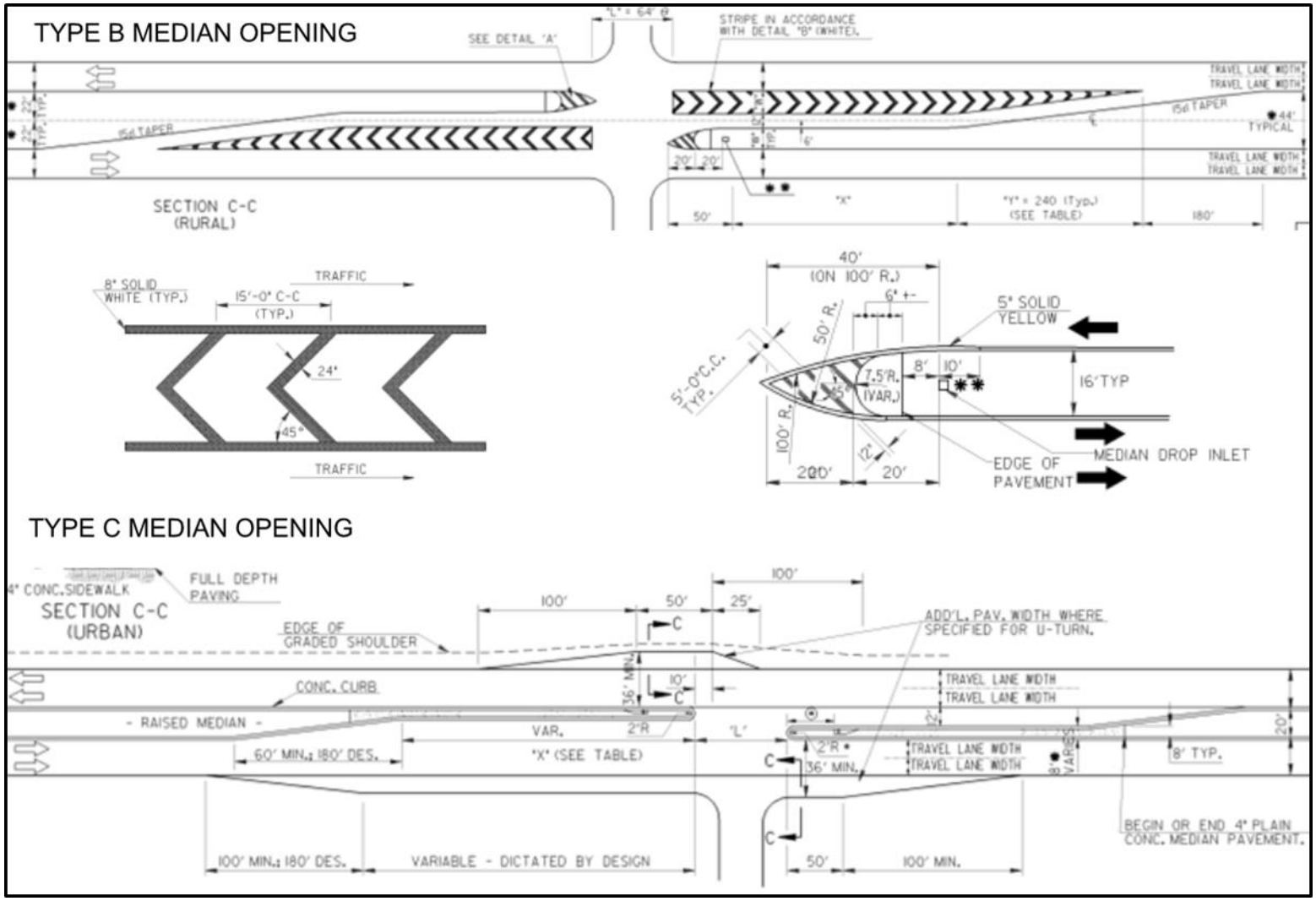

Figure 4-1 Georgia DOT Construction Details for Median Openings

4.6 Horizontal Alignment

In general, the horizontal alignment of driveways should be designed using a tangent section from the centerline of the State Highway and extending to the property line. Horizontal curves that are used outside the State Highway Right of Way are generally not part of the permit issued by the Department.

Horizontal curves should be sufficient to provide safe operations at speeds that would normally occur in the areas where they are constructed.

4.6.1 Angle of Intersection

Intersecting driveways and roads should generally meet at or nearly at right angles. Driveways and roads intersecting at acute angles create sight limitations that should be avoided.

In some cases, a more suitable overall design can be achieved by allowing intersecting angles other than 90 degrees. Table 4-5 gives the minimum angle of intersection that will generally be allowed for driveways designed to accommodate two-way traffic flow. Figure 4-2 illustrates the minimum angle of intersection for one-way right turn only driveways.

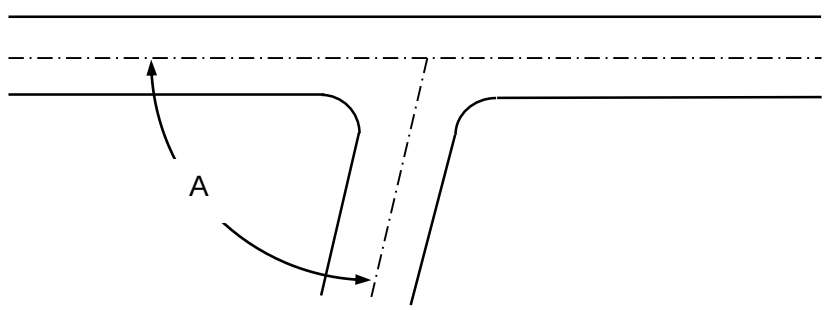

DRIVEWAY USE	MINIMUM ANGLE OF INTERSECTION (A), Degrees
RESIDENTIAL	70
COMMERCIAL	85
WHEN DESIGNED FOR TRUCKS	88

Table 4-5 Minimum Angle of Intersection for Two-Way Driveways

4.6.2 Alignment of Approach and Departure Lanes

If possible, all driveways should be designed and constructed so as to align with driveways or streets on the opposite side of the highway. Driveways at RCUT locations or limited driveways that do not have the alignment of through movements crossing the highway should be such that abrupt shifts in the travel pattern are not required. Driveways designed for one-way right turn only traffic flow may have intersecting angles as low as 70 degrees, as illustrated in Figure 4-2.

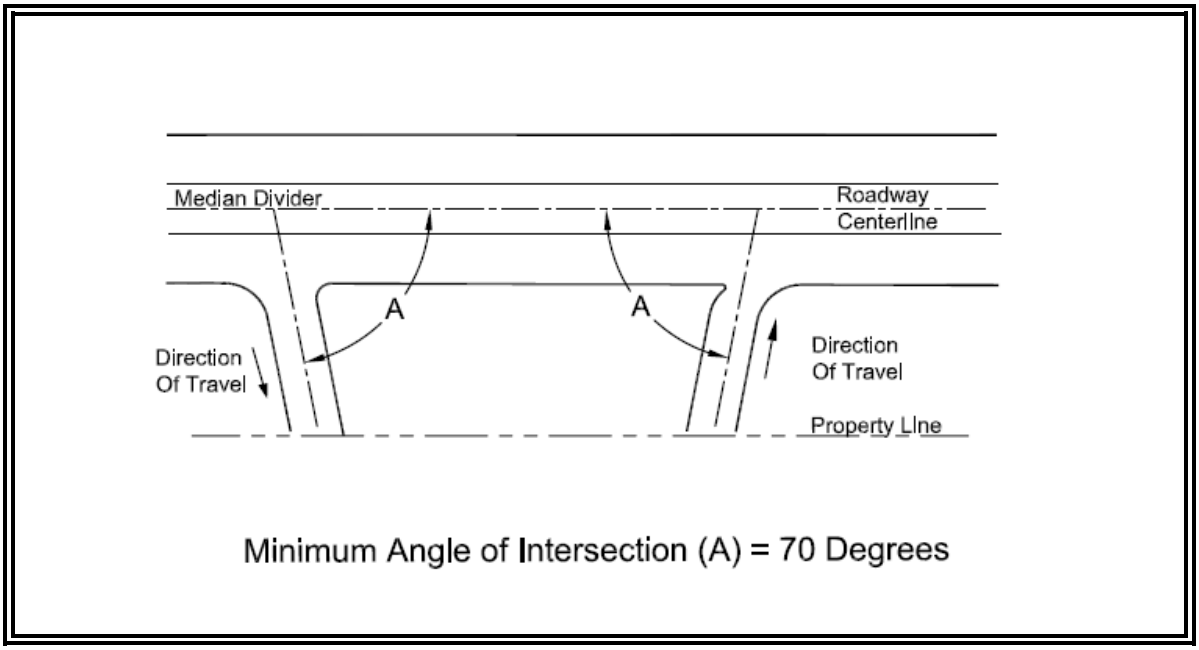

Figure 4- 2 Minimum Angle of Intersection for One-Way Driveways

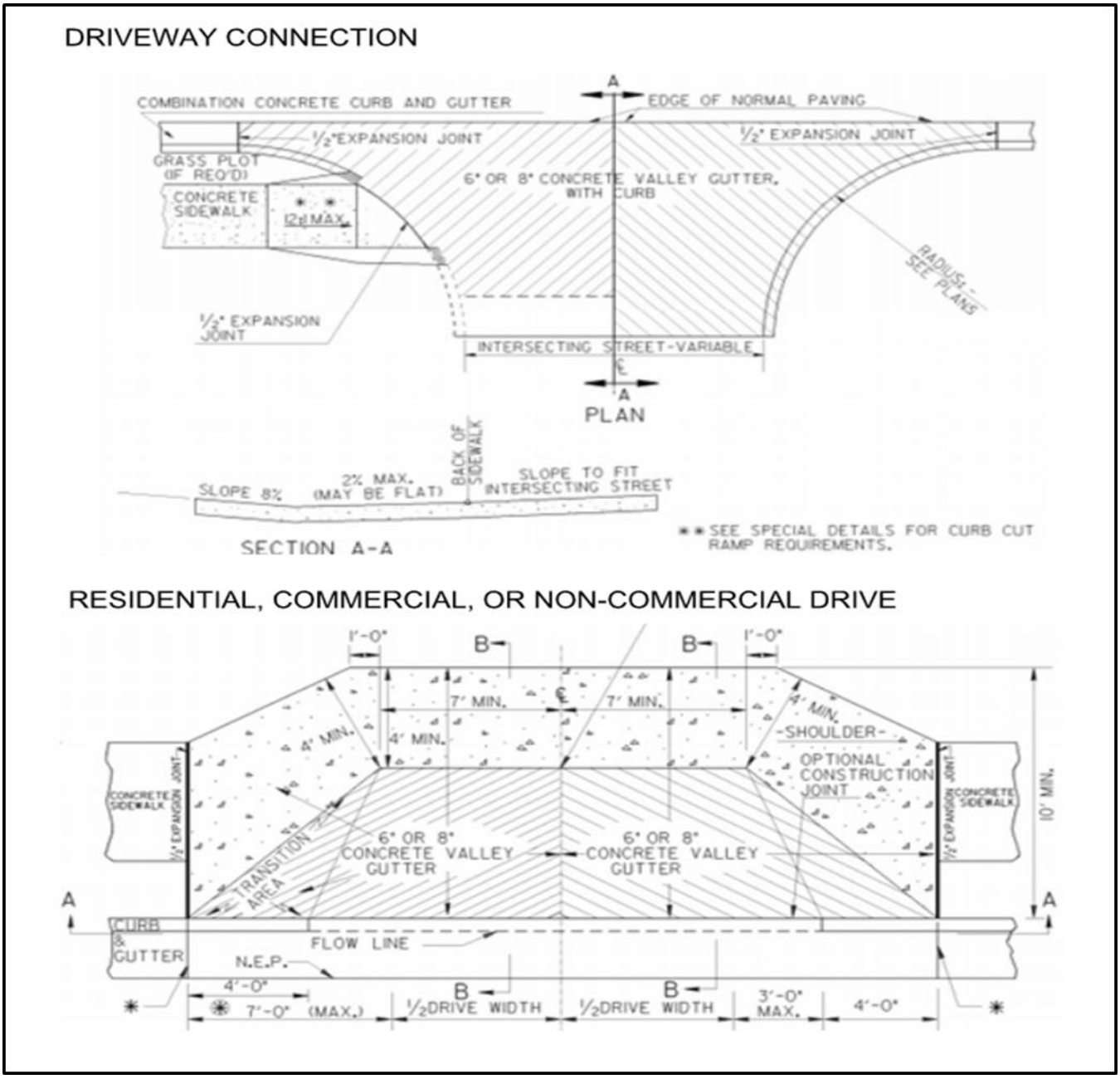

Figure 4-3 Driveway Connections to Urban Sections

4.7 Driveway Tie-In Configurations

4.7.1 Driveway Connections to Urban Sections

This section describes the requirements for constructing driveway connections to State Highways with curb and gutter. Georgia DOT has two Standard Detail Drawings (A1 and A2) that describe the appropriate design and construction methods for these conditions. The basic layout of the two configurations is schematically shown in Figure 4-3.

NOTE: Please use the current ADA requirements when applying Figure 4-3. Connections shown in Standard 9031J Construction Detail A2 are commonly used for commercial driveways, while the configuration given in Construction Detail A-1 is typically used for residential driveways. Figure 4-3 is a simplified diagram of the details. The designer should refer to the actual GDOT Construction Details when preparing driveway plans for the most current standards.

The actual dimensions of lane widths, radii, etc. should be as specified in relevant sections of this document. Figure 4-3 also does not show deceleration or turn lanes. See section 49.1 for guidelines on deceleration lane requirements and their dimensions.

4.7.2 Driveway Connections to Rural Sections

The section describes the requirements for connecting to State Highways that do not have curb and gutter.

The basic configuration and requirements for connecting a driveway that will not have curb and gutter into a State Highway that also does not have curb and gutter are illustrated in Figure 4-4.

The ends of the driveway pipe should be extended to maintain a minimum six (6) foot shoulder. The side slope should normally be flatter than 6:1 but shall be no steeper than 4:1.

When ditches are constructed on the State Right-of-Way, the front slope should be no steeper than 4:1. When the bottom of the ditch is between 5’ and 8’ below the edge of pavement, the front slope can be increased to 3:1. When the ditch is greater than 8’ below the edge of pavement, the front slope can be increased to 2:1. In any case, when the front slope is steeper than 4:1, guardrail should be used.

Figure 4-4 shows a deceleration lane, which in some conditions is not required. See section 4.9.1 to determine if a deceleration lane will be required.

For connecting a driveway that will have curb and gutter to a State Highway without curb and gutter, see Figure 4-5.

Curb and gutter should not be used adjacent to a travel lane on a road with posted speed limits above 45 MPH. A 6” curb and gutter may be used along acceleration/deceleration lanes or a designated turn lane but not along a taper.

.

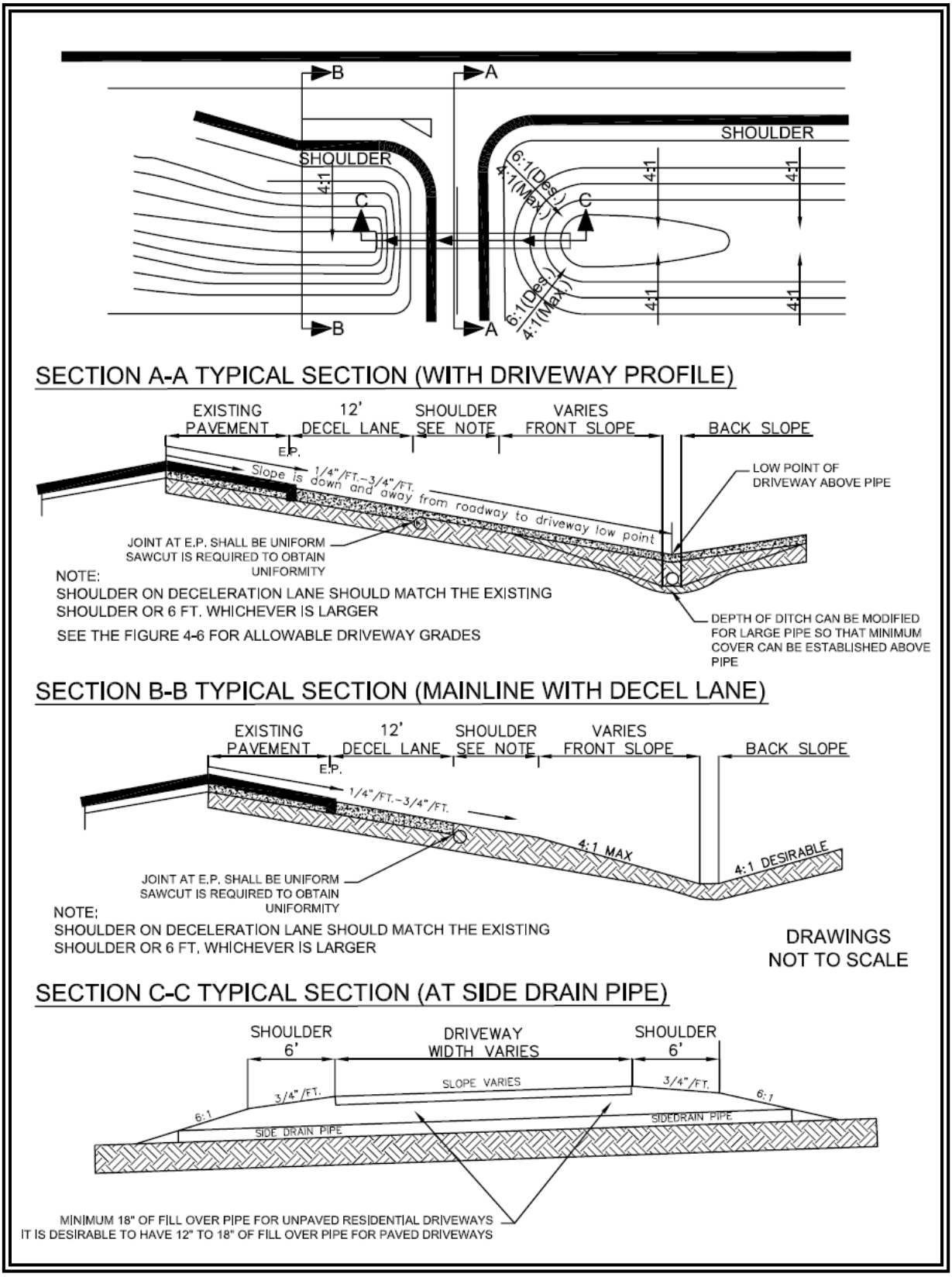

Figure 4-4 Driveway Connection to Rural Roadways

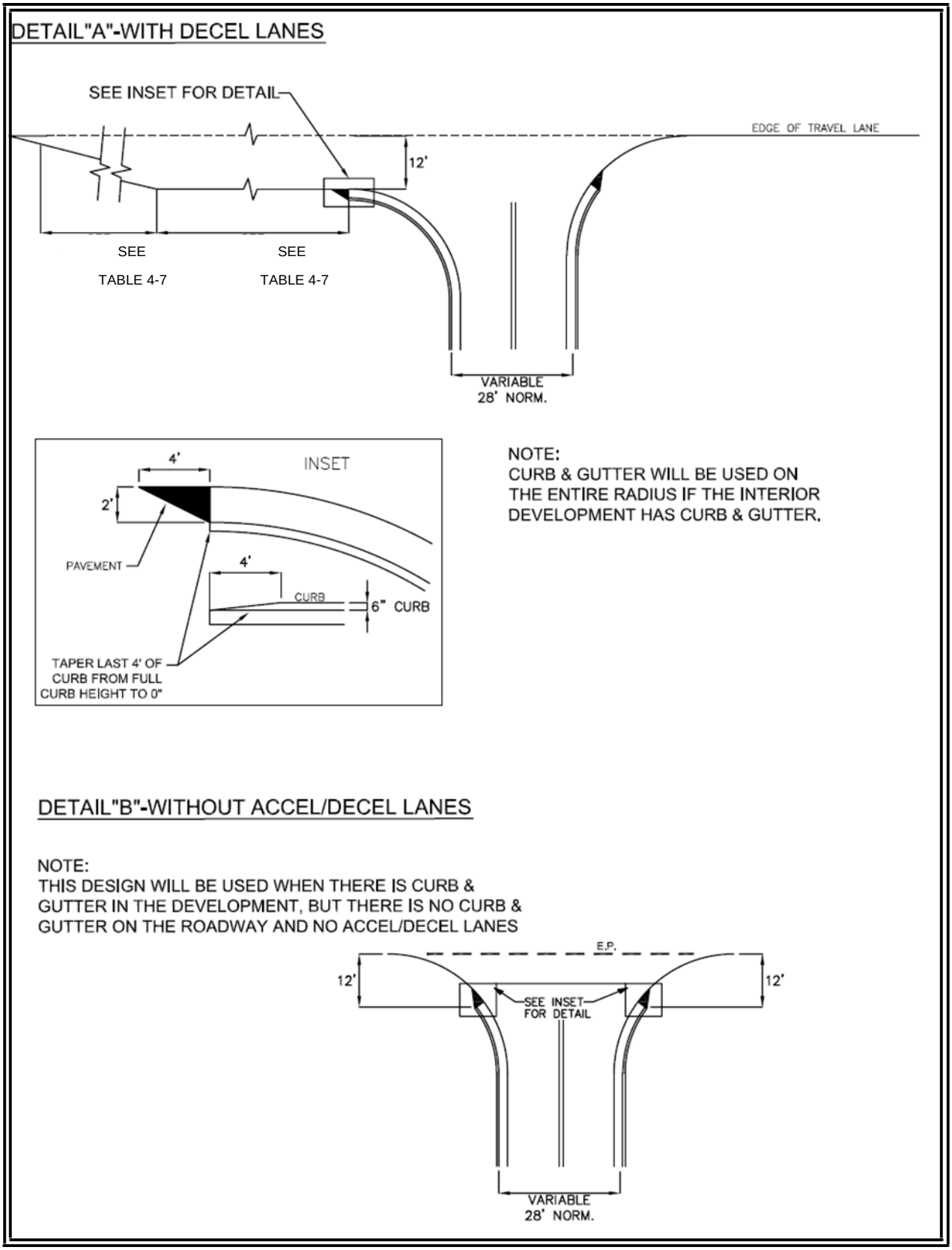

Figure 4-5 Connecting Driveways with Curb & Gutter to Rural Sections

4.8 Driveway Grades

In general, the grade of the driveway should be a continuation of the cross slope of the roadway that it connects to. Figure 4-6 illustrates allowable grades for driveways connecting to State Highways.

Figure 4-6, shows the profile of a driveway connecting to the normal cross section of a highway. The cross slope of the highway should be maintained for a minimum distance of 12' beyond the edge of pavement.

Where the roadway pavement is super elevated, it is desirable to reduce the grade of the driveway below that of the super elevated pavement in order to reduce the amount of runoff draining across the highway. The grade of the driveway will be allowed to break at the edge of pavement. However, the difference in grade change must not exceed 0.08ft/ft.

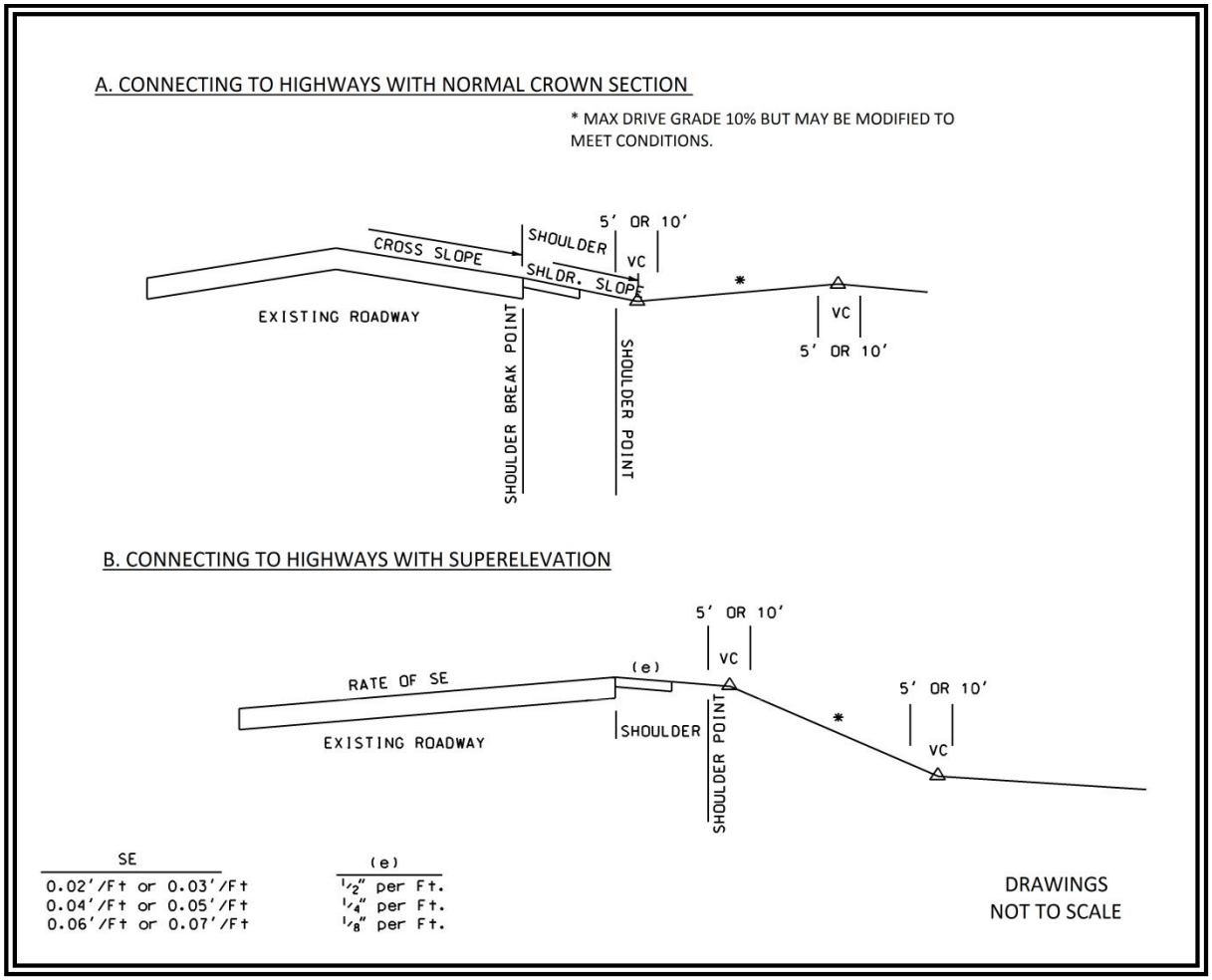

Figure 4-6 Allowable Driveway Grades

4.9 Auxiliary Turn Lanes

4.9.1 When Deceleration Lanes Are Required

The provisions of this section should generally apply to auxiliary lanes installed on the approach to an intersection that provide for deceleration and storage of vehicles waiting to turn right or left. Such lanes are always beneficial and will be required in conjunction with commercial driveway permits when projected traffic volumes exceed minimum levels as provided in the sections below.

All existing utilities which would be under new pavement or in auxiliary/deceleration lanes should be relocated before final grading and paving, and at no cost to DOT. Existing utilities which are found to be not in conflict with construction may be allowed if a Retention Request is processed by the utility owner and approved by the Department.

4.9.1.1 Minimum Requirements for Right Turn Deceleration Lanes

Right turn deceleration lanes must be constructed at no cost to the Department if the daily site generated Right Turn Volumes (RTV) based on ITE Trip Generation (assuming a reasonable distribution of entry volumes) meet or exceed the values shown in Table 4-6. Passing lane sections fall under the criteria for two or more lanes.

Posted Speed	2 Lane Routes		More than 2 Lanes on Main Road	
	AADT		AADT	
	< 6,000	>=6,000	<10,000	>=10,000
35 MPH or Less	200 RTV a day	100 RTV a day	200 RTV a day	100 RTV a day
40 to 50 MPH	150 RTV a day	75 RTV a day	150 RTV a day	75 RTV a day
55 to 60 MPH	100 RTV a day	50 RTV a day	100 RTV a day	50 RTV a day
>= 65 MPH	Always	Always	Always	Always

Table 4-6 Minimum Volumes Requiring Right Turn Lanes

In the event the District Traffic Engineer determines that field conditions or other factors indicate that it would be in the best interest of the Department, use the form in **Appendix F** to document a waiver for the deceleration lane requirement, the District Traffic Engineer must document the recommendations using the form in **Appendix F**. The recommendations shall be approved by the District Engineer and be attached to the Permit. The District Traffic Engineer may also require the addition of a Right Turn lane, even when the conditions in Table 4-6 are not met, if roadway geometry or field conditions indicate that the safety of the traveling public would be improved. The recommendation must be documented and approved by the District Traffic Engineer for inclusion with the Permit.

The R/W for auxiliary/deceleration lanes may be dedicated in fee simple to the Department for the Department to maintain or the applicant must sign an agreement with the Department to maintain the lane to the Department's standards and to hold harmless the Department in the event that section of roadway is identified in any liability action. A Limited Warranty Deed is not acceptable when R/W is donated to the Department. See section 2.5 for details regarding RW dedication procedures.

The pavement specifications for auxiliary/deceleration lanes must be Georgia DOT Standard Specifications for Construction of Roads and Bridges, or be as described and approved by the Chief Engineer in cases where a lesser design may be acceptable, or where a proposed project is expected to tie in.

4.9.1.2 Minimum Requirements for Left Turn Lanes

Left turn lanes must be constructed at no cost to the Department if the daily site generated Left Turn Volumes (LTV) based on ITE Trip Generation (assuming a reasonable distribution of entry volumes) meet or exceed the values shown in Table 4-7a **Condition 1**. If the LTVs are below the requirements for **Condition 1**, the applicant may be required to construct a Right Hand Passing Lane (see **Figure 4-7** if they meet the criteria in Table 4-7b **Condition 2**). The District Traffic Engineer will use engineering judgment to determine if the field conditions would allow construction of the Right Hand Passing Lane. Passing lane sections fall under the criteria for two or more lanes.

Condition 1

LEFT TURN REQUIREMENTS-FULL CONSTRUCTION				
Posted Speed	2 Lane Routes		More than 2 Lanes on Main Road	
	ADT		ADT	
	<6,000	>=6,000	<10,000	>=10,000
35 MPH or Less	300 LTV a day	200 LTV a day	400 LTV a day	300 LTV a day
40 to 50 MPH	250 LTV a day	175 LTV a day	325 LTV a day	250 LTV a day
>= 55 MPH	200 LTV a day	150 LTV a day	250 LTV a day	200 LTV a day

Table 4-7a Minimum Volumes Requiring Left Turn Lanes

Condition 2

LEFT TURN REQUIREMENTS w/Right Hand Passing Lane Option		
Posted Speed	2 Lane Routes only	
	ADT	
	<4,000	>=4,000
35 MPH or Less	200 LTV a day	125 LTV a day
40 to 45 MPH	100 LTV a day	75 LTV a day
50 to 55 MPH	75 LTV a day	50 LTV a day

Table 4-7b Minimum Volumes Requiring Right Hand Passing Lanes

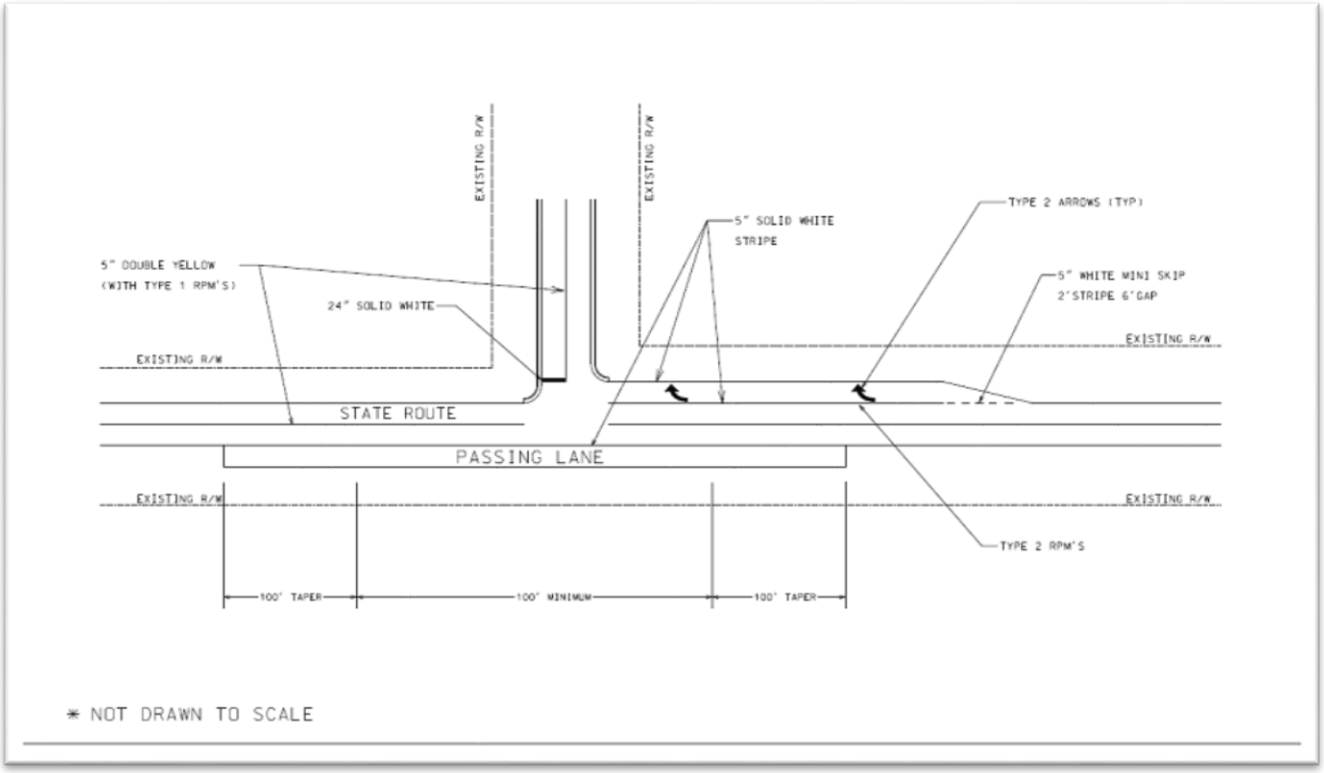

Figure 4-7 Right Hand Passing Lane

In the event the District Traffic Engineer determines that field conditions or other factors indicate that it would be in the best interest of the Department to waive the left turn lane requirement, the District Traffic Engineer must document the recommendations using the form in **Appendix F**. The recommendations shall be approved by the District Traffic Engineer and be attached to the Permit. The District Traffic Engineer may also require the addition of a Left Turn lane, even when the conditions in Table 4-7 are not met, if roadway geometry or field conditions indicate that the safety of the traveling public would be improved. The recommendation must be documented and approved by the District Traffic Engineer for inclusion with the Permit.

4.9.2 Right Turn Lane Lengths

This section provides the design guidelines that should be used to establish the lengths of turn lanes if they are required under the provisions of the previous section.

Under ideal conditions, turn lanes should provide a full-width lane that is long enough to allow for vehicles to decelerate from the operating speed to a full stop in addition to the length of full-width lane that is needed to store vehicles waiting to turn.

Table 4-8 contains guidelines for lengths of tapers (optional) and full-width turn lanes. The taper length in Table 4-8 applies to deceleration right turn lanes only. Guidelines for left turn tapers and lengths are given in Section 4.9.4.

SPEED (MPH)	FULL WIDTH STORAGE, FT.	TAPER, FT.
25	50	50
30	75	50
35	100	50
40	150	50
45	175	100
50	225	100
55	250	100
60	300	100
65	350	100

Table 4-8 Minimum Right Turn Deceleration Lengths

When traffic studies are conducted, the length of full-width lane needed for storage should be determined. If the length of full-width storage is greater than the length of full-width storage shown in Table 4-8, the longer length should be provided.

At signalized intersections, the amount of storage for both right and left turns can be based on the number of vehicles arriving during 1.5 signal cycles.

For unsignalized intersections, left turn storage should accommodate vehicles arriving during a two-minute period. Minimal storage is required for right turn lanes utilizing yield control at unsignalized intersections.

4.9.3 Acceleration Lanes

Acceleration lanes are generally not provided on low speed highways. Acceleration lanes may be required at locations where grade, sight distance or traffic is such that the Department determines they are needed. When operating speeds on the highway are 55 MPH and above, full-width acceleration lanes designed to meet the AASHTO minimum length should be considered.

4.9.4 Left Turn Lane Design

The design of left turn lanes should consider the intended function and the characteristics of the highway. In many cases, it is necessary to widen the existing roadway to introduce the left turn lane. In most cases vehicles approaching the turn lane are shifted to the right (especially when using symmetrical widening). The left turning traffic is then shifted back into the lane. Through traffic is returned to its original lane beyond the intersection. When the highway has a median that is at least 20 feet wide, the left turn lane can typically be developed out of the median, avoiding the need for transitions.

The basic design elements of left turn lanes are illustrated in Table 4-9. This example shows symmetrical widening, which basically requires the through traffic on each side to shift by one half of the lane width. Some circumstances may dictate that all widening be achieved on one side, which requires a full lane shift for through traffic on the side where the additional width is developed. Table 4-9 provides guidelines for selecting the proper length of approach taper. When shifts are not 6' or 12', use table 4-9 bay taper.

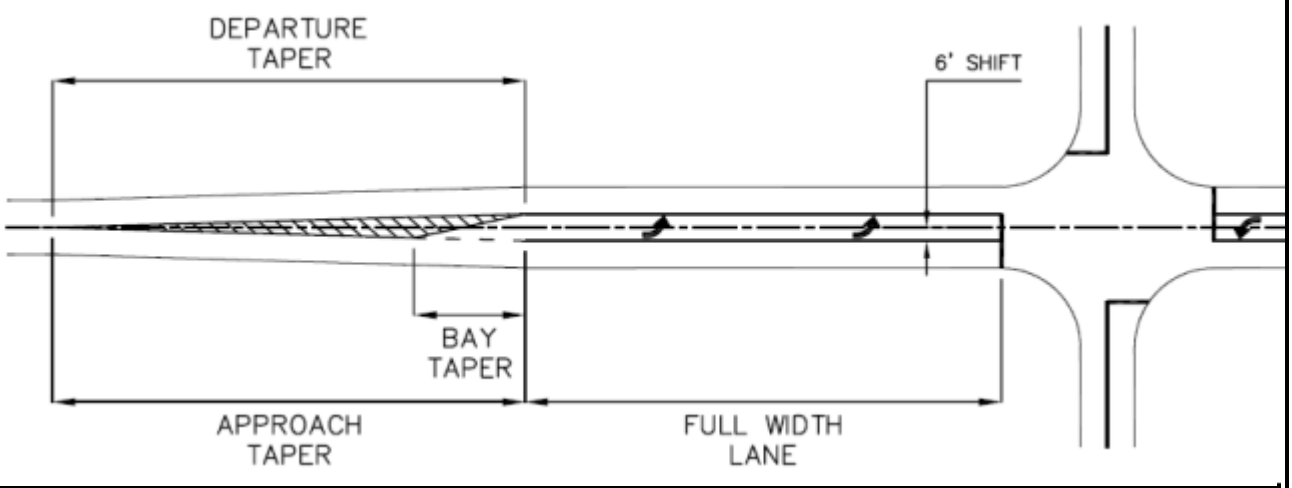

POSTED SPEED LIMIT, MPH	APPROACH AND DEPARTURE TAPER, FT.		BAY TAPER, FT.	FULL WIDTH STORAGE, FT
	6' Shift	12' Shift		
25	65	130	50	85
30	90	180	50	135
35	125	250	50	160
40	160	320	50	210
45	270	540	100	235
50	300	600	100	285
55	330	660	100	310
60	360	720	100	360
65	390	780	100	410

Table 4-9 Minimum Design Elements of Left Turn Lanes

The example shown in Table 4-9 has straight-line tapers. These are acceptable but other designs may also be used, including the following: partial tangent tapers, symmetrical reverse curve, and asymmetrical reverse curve. See latest edition of AASHTO Green Book for details.

The required length of full-width storage shall be based on storage length and a deceleration length that allows vehicles to safely decelerate without a possible conflict with another vehicle (Refer to Construction Detail M-3A).This should be determined in the traffic study. The amount of storage is dependent on the type of traffic control in effect. For signalized intersections, the storage should be sufficient to accommodate the number of vehicles arriving during 1.5 signal cycles, using peak hour volumes. At stop-controlled intersections, the storage is typically based on the number of vehicles arriving during a two-minute period within the peak hour.

4.9.5 Dual Left Turn Lanes

Dual left turn lanes are often needed to satisfy high volume demands. Capacity analysis should be used to identify the need for dual left turn lanes. Dual left turn lanes are typically considered when the peak hour left turn volume is 300 vehicles or greater (However dual lefts can be considered when peak-hour left-turning volume is less than 300. This judgement will be based off the discretion of the District Traffic Engineer).

The decision to use dual left turn lanes should consider the off-peak periods as well as the peak periods. The off-peak periods may be adversely affected, since the use of dual left turn lanes typically precludes permissive left turns.

If dual left turn lanes are included in the design, the following design guidelines should be considered:

- Because of off tracking and the added difficulty involving two-abreast turns, a minimum 28' throat-width should be provided through for the receiving lane(s).
- Pavement markings should be provided to guide the path of the turning vehicles.
- The design should be checked to ensure that conflicts are minimized between opposing left turn maneuvers. Figure 4-8, Example "A" shows an optional layout of marking for opposing dual left turn lanes. This layout shows 30' between opposing skip lanes, which provides an additional 6' of width for the inside left turns to pass.
- When dual left turn lanes are located opposite from an approach that does not have a dual left turn lane, the design should minimize the lateral offset for vehicles traveling straight through the intersection. This can be accomplished by providing a median or striped-out area opposite the dual left turn lane. See Figure 4-8, Example "B" as an option of design.

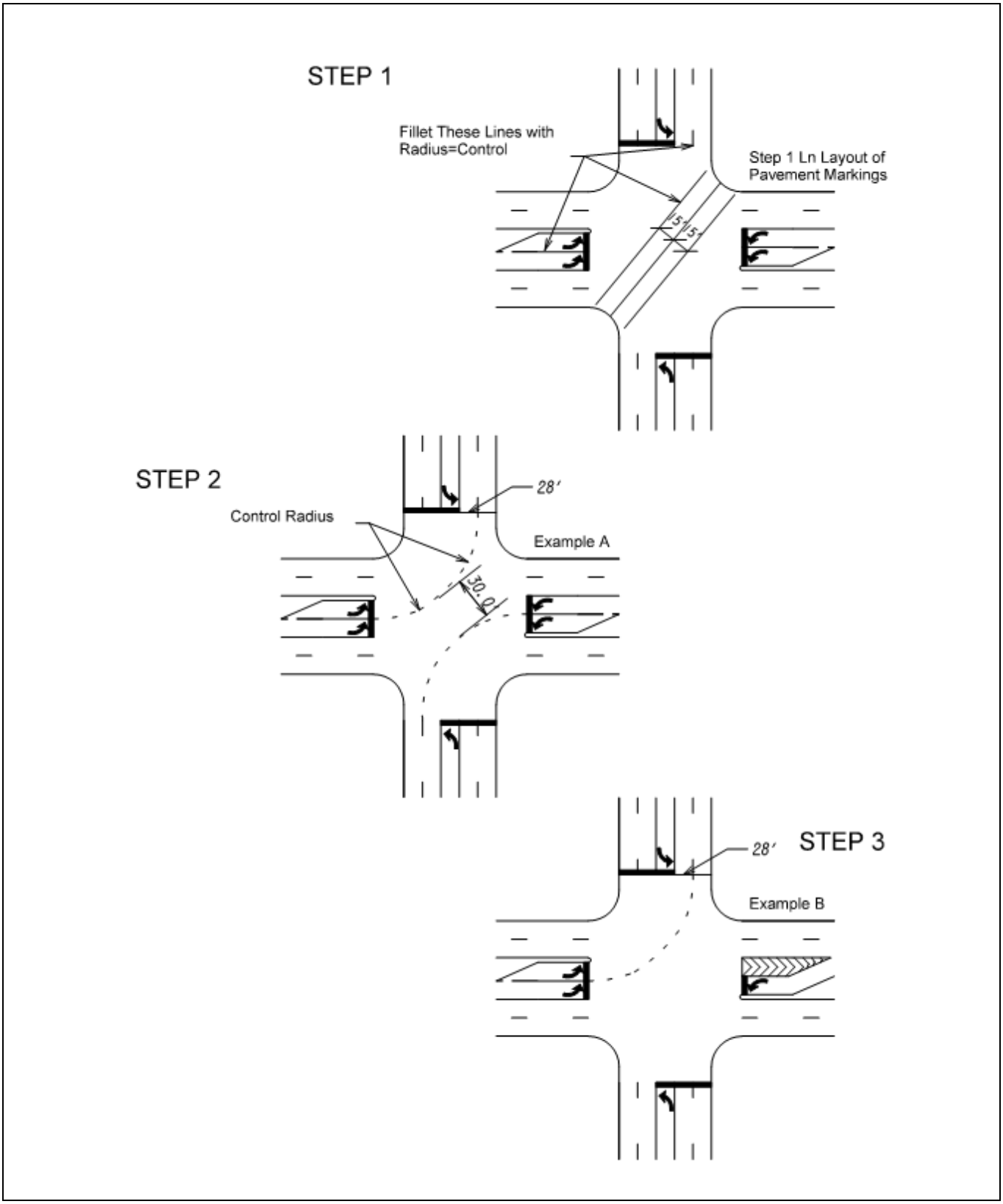

Figure 4-8 Design of Dual Left Turn Lanes

4.10 Raised Islands

Raised islands are an important form of intersection channelization that is often needed to accomplish the following objectives:

- Prohibit undesirable movements,
- Define the paths of allowed movements, and
- Provide a refuge area for pedestrians.

Raised islands should be large enough to command attention and accommodate wheelchairs. The smallest raised island should have an area of 50 square feet for urban and 75 square feet for rural intersections. However, 100 square feet or more is preferable for both. (Refer to revised ADA standards)

Figure 4-9A contains a median island along the driveway. This drawing should not imply that median islands or corner islands are required for all driveways. However, large painted islands may not serve the intended channelization purpose and the type island to be used should be based on the actual circumstances of the site.

Figure 4-9B shows a typical design for a raised corner island at a two-lane driveway. This design uses a compound radius (275' and 40') to provide optimum sight distance for right turn cut through sufficient size for wheelchair ramps and level landings.

Raised islands should be offset from the edge of the adjacent travel lane on all sides and should be designed as the striped island typical path of a passing car vehicle. Raised islands adjacent to highways with posted speed limits at or below 45 MPH, the offset should be 4’ desirable, 2’ minimum. Minimum offsets for raised islands are adjacent to highways with posted speed limits at or above 50 MPH, the island shall be offset from the edge of the highway by a minimum distance of 10’. When the raised island size does not meet the pedestrian size, a semi-depressed raised island can be used (Fig. 4-9C).

When multiple crosswalks are required to pass through islands, the required size may exceed the 75 square feet mentioned above. The additional area may be required to install wheelchair ramps. When the island size can't be increased to accommodate pedestrian wheel chair ramps size, a semi-depressed raised can be used, see figure 4-9C. As an alternate to ramps, the pedestrian travel way can be “a cut-through” through the island, remaining on the grade of the roadway.

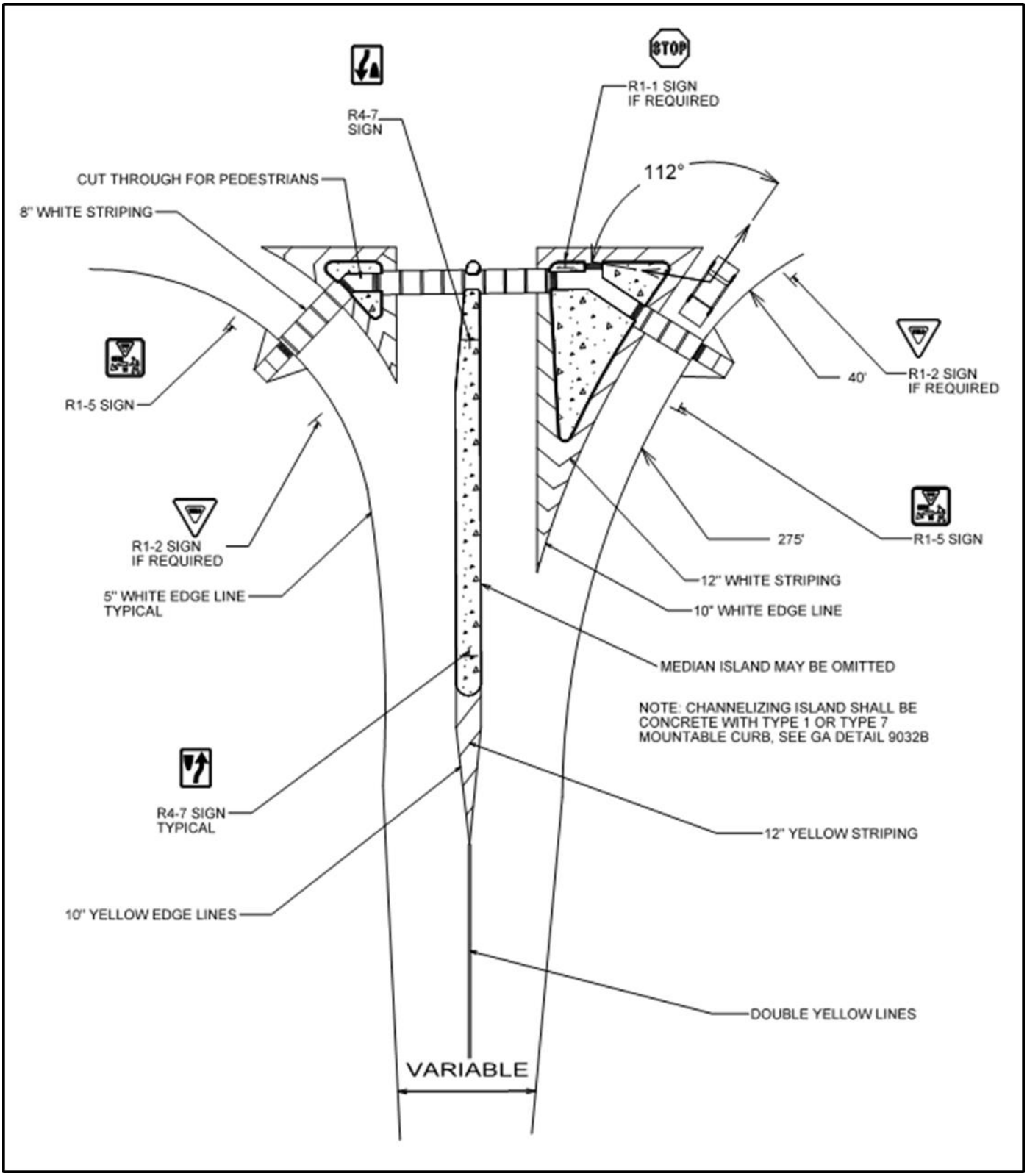

Figure 4-9A Two-Lane Driveway Raised Island

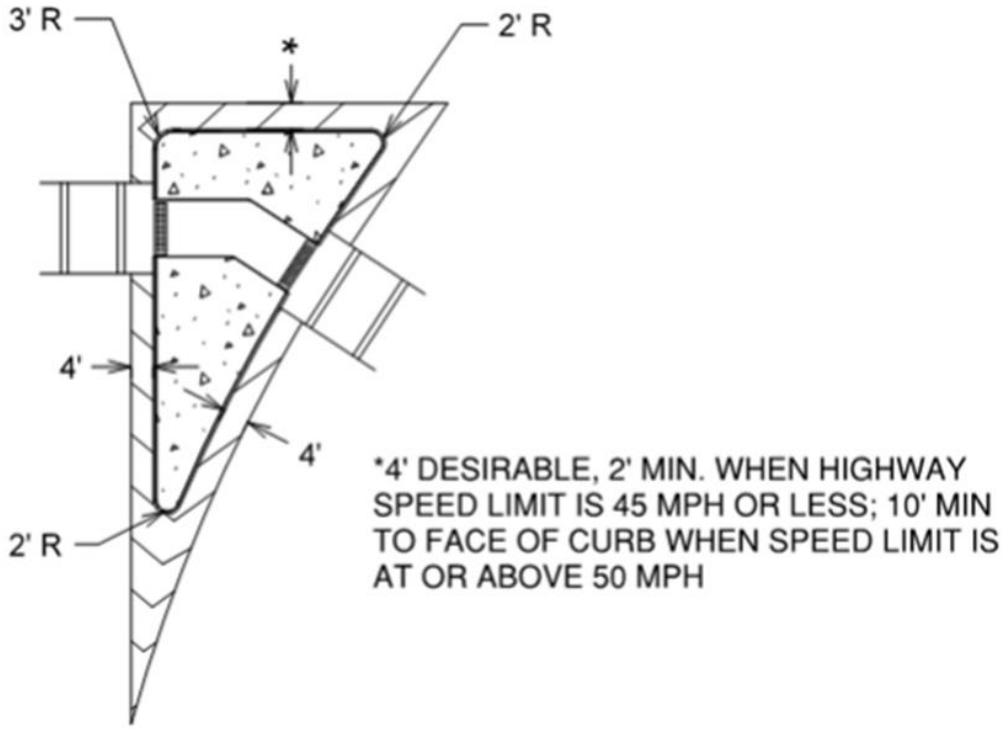

Figure 4-9B Raised Island Detail

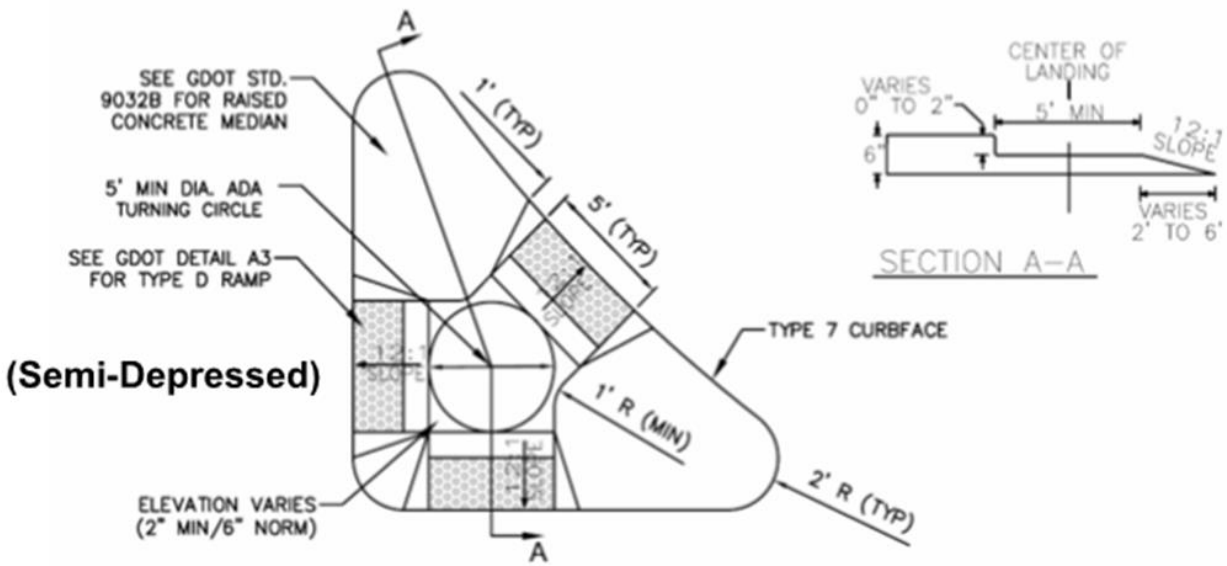

Figure 4-9C Raised Concrete Island with Ramps

4.11 Restricted Movement Driveways

Right-in/right-out driveway raised islands are also typically used to channelize the movements at a driveway where only right turns are allowed. The raised island is an effective means of preventing left turns. Figure 4-10 provides a typical design for right turn only islands. All sign posts to be placed within concrete area must have a hole through pavement structure. The hole may be formed, drilled or sawed.

In many cases, a center raised concrete median should be placed on the State Route in conjunction with the construction of a right in/right out driveway. The raised concrete island should be designed to accommodate a tractor trailer/design vehicle to help prevent left turn movements at the driveway. The District Traffic Engineer can waive for the need for a center raised island if they determine if the field conditions may not be needed.

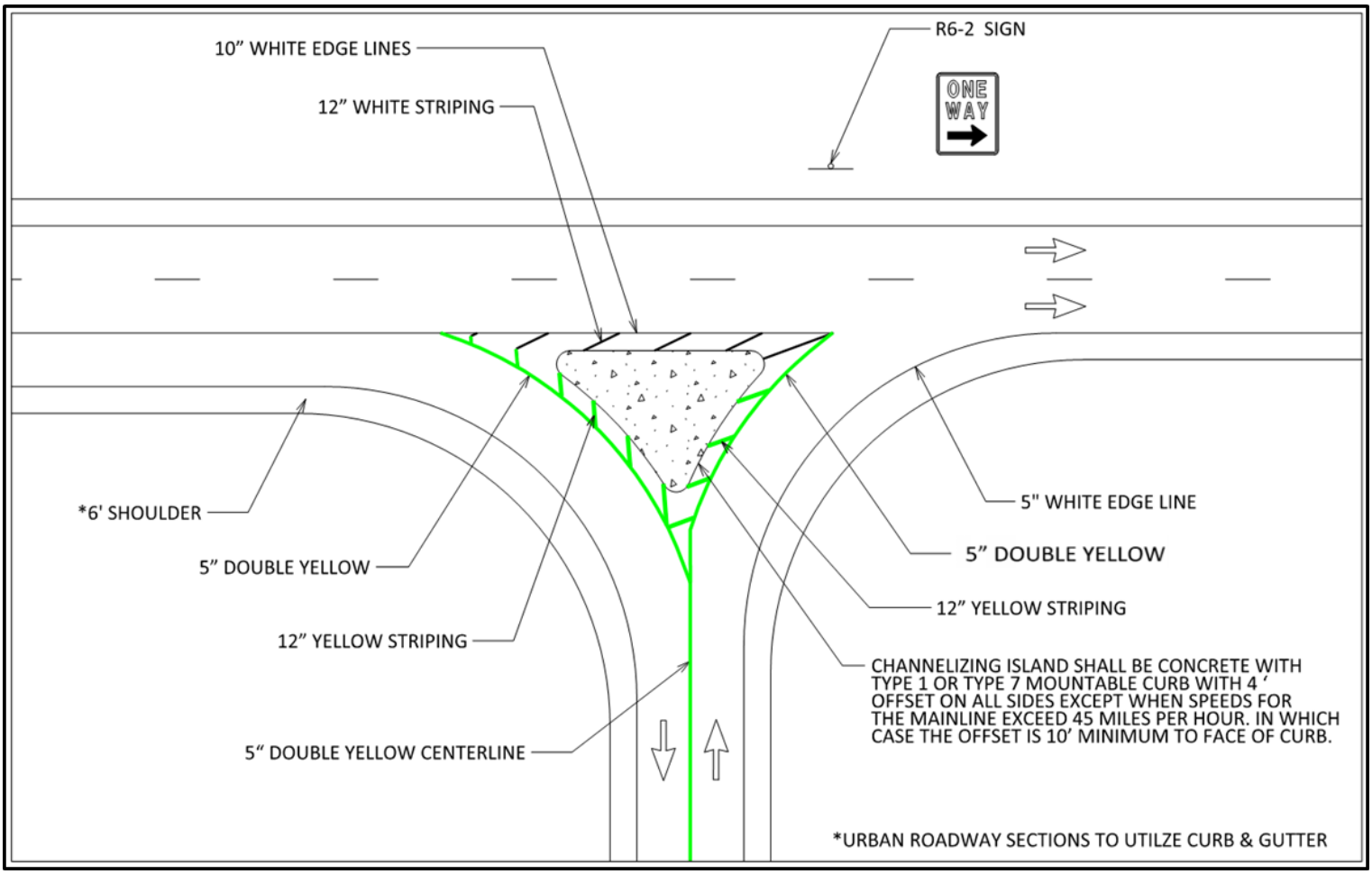

NOTE: Highlighted portion in the figure is for the yellow striping

Figure 4-10 Typical Right-In / Right-Out Driveway Island

4.12 Pedestrian Considerations

When driveways are constructed in areas where pedestrian activity is not prohibited, the design should adequately provide for pedestrian movement and interaction with vehicular traffic. Pedestrian features that should be considered include sidewalks, crosswalks, traffic control features, and curb ramps are required. The Americans with Disabilities Act (ADA) Accessibility Guidelines must be utilized where pedestrian traffic is expected.

Figure 4-11A contains typical locations for curb cut ramps. Ramps are required at all pedestrian crosswalks where curb is constructed or replaced. Ramps must be constructed on each side of a crosswalk to provide a continuous ADA accessible pathway.

The required crosswalk detail can be found current on the GDOT Department Construction and Details website under detail T-11a and also shown in Figure 4-11B. See current Department Construction Details for the appropriate treatment. Refer to Pedestrian & Streetscape Guide.

Figure 4-11C contains typical locations for ramps in raised concrete traffic islands.

Figure 4-11A Typical Locations for Curb Cut Ramps

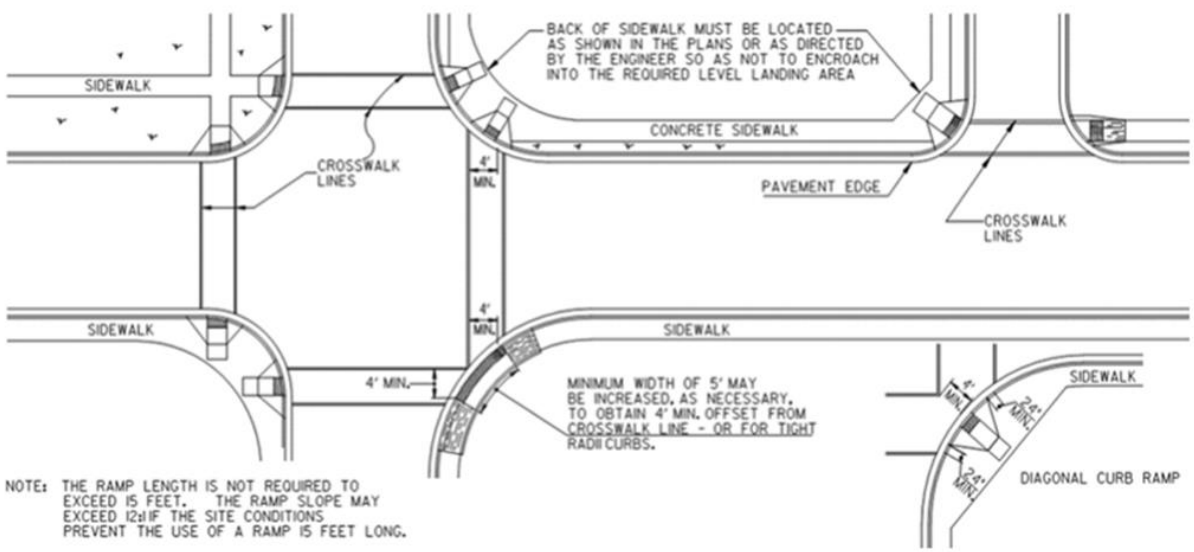

Figure 4-11B Cross Walk Details

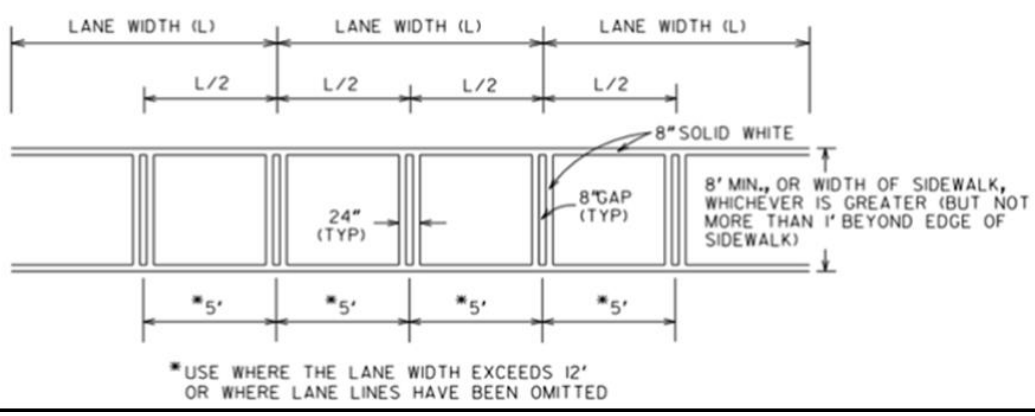

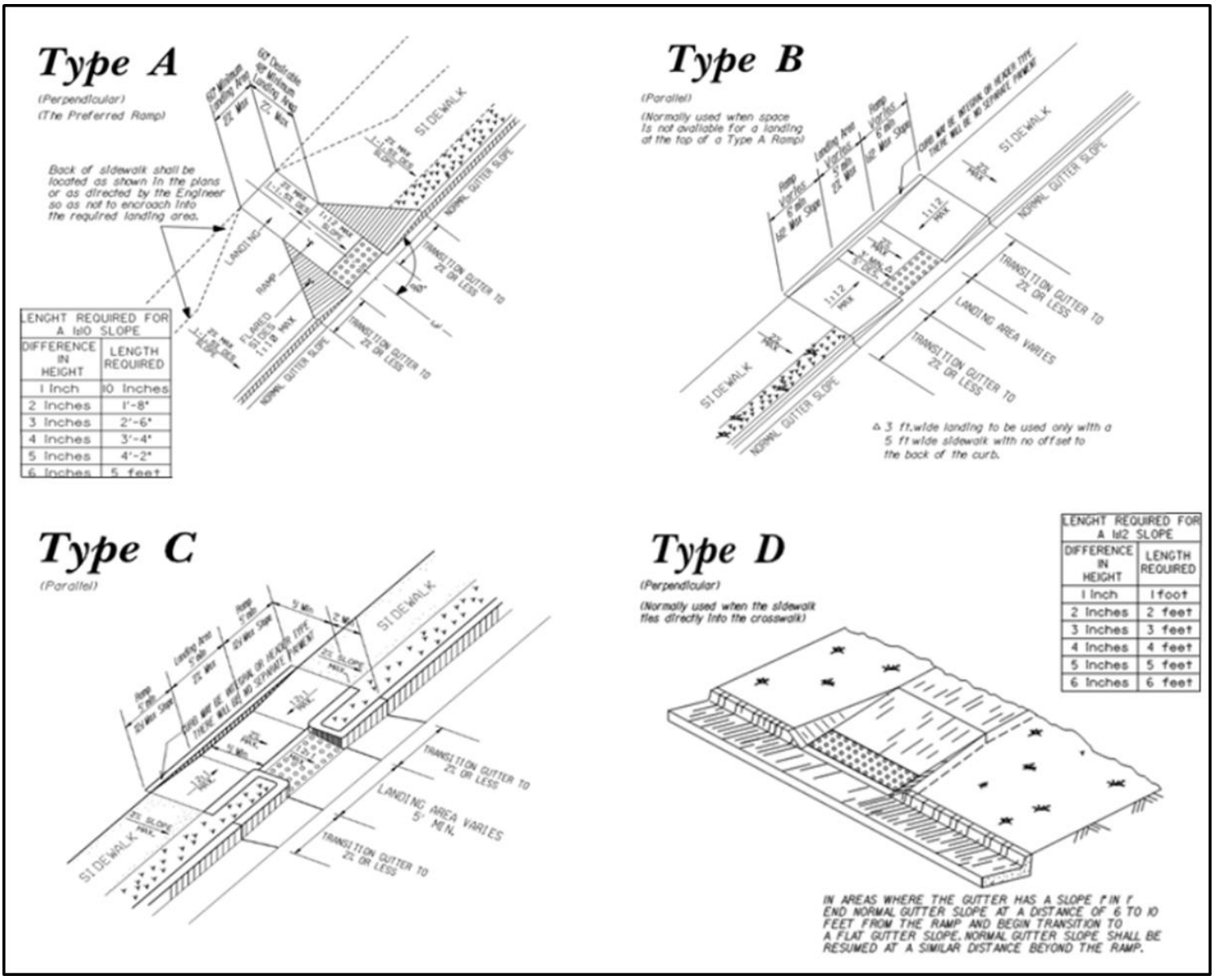

Figure 4-11C – CONCRETE SIDEWALK WHEELCHAIR RAMPS TYPES

4.13 Clear Zone Requirements

AASHTO publishes a Roadside Design Guide that should be used as a reference when designing driveways.

Table 4-10 provides the clear zone distances as contained in the Roadside Design Guide. Driveways must be designed so that all areas within the Highway Right of Way have clear zones as defined in Table 4-10.

(From AASHTO 2011 Roadside Design Guide)

DESIGN SPEED MPH	DESIGN ADT	FILL SLOPES			CUT SLOPES		
		6:1 or Flatter	5:1 to 4:1	3:1	3:1	5:1 to 4:1	6:1 or Flatter
40 OR LESS	< 1,500	10-12	12-14	**	12-14	12-14	12-14
	1,500 – 6,000	12-14	14-16	**	14-16	14-16	14-16
	> 6,000	14-16	16-18	**	16-18	16-18	16-18
45 – 50	< 1,500	14-16	16-20	**	10-12	12-14	14-16
	1,500 – 6,000	16-18	20-26	**	12-14	14-16	16-18
	> 6,000	20-22	24-28	**	14-16	18-20	20-22
55	< 1,500	16-18	20-24	**	10-12	14-16	16-18
	1,500 – 6,000	20-22	24-30	**	14-16	16-18	20-22
	> 6,000	22-24	26-32*	**	16-18	20-22	22-24
60	< 1,500	20-24	26-32*	**	12-14	16-18	20-22
	1,500 – 6,000	26-30	32-40*	**	14-18	18-22	24-26
	> 6,000	30-32*	36-44*	**	20-22	24-26	26-28
65 - 70	Under 1,500	24-26	28-36*	**	12-16	18-20	20-22
	1,500 – 6,000	28-32*	34-42*	**	16-20	22-24	26-28
	Over 6,000	30-34*	38-46*	**	22-24	26-30	28-30

Table 4-10 Clear Zone Distances (In Feet from Edge of Traveled Way)

NOTES: * Clear zones may be limited to 30' for practicality and to provide a consistent roadway template if previous experience with similar designs indicates satisfactory performance. Greater clear zone distances may be provided where indicated by crash history.

** Fixed objects should not be present in the vicinity of the toe of these slopes. The width of the recovery zones should consider a number of factors including right of way availability, environmental concerns, economic factors, safety needs, and accident history.

All areas located within the clear zones should remain clear of obstructions such as bridge abutments, poles, trees, etc. If obstructions are unavoidable, the design should include appropriate protection such as break-away design, guardrail installation, safety end treatments on culverts, etc. The Roadside Design Guide includes a table for horizontal curve adjustments, where the clear zone correction factor is applied to the outside of curves only. Curves flatter than a 2860 foot radius do not require an adjusted clear zone. Guardrails must be kept free of nearby vegetation to allow for maintenance.

4.14 Pavement Design

All construction, within the right of way, of surfaces intended for travel by motorized vehicles shall be paved and should follow the Georgia DOT Signing and Marking Guidelines.

The pavement specification of auxiliary lanes on State Highways shall conform to the guidelines specified within the GDOT Pavement Design Manual, or the typical of the existing roadway, as determined by the District Traffic Engineer.

4.15 Right of Way Requirements

In order to construct driveways, it is often necessary to construct improvements to the State Highway. These improvements can include the addition of deceleration lanes along the State Highway such as a deceleration lane, or traffic signal equipment.

If sufficient right of way exists, improvements to the State Highway will be permitted without the requirement of additional right of way. Sufficient right of way should be donated to the Department for the deceleration lane/ commercial driveway, roundabout design, or right of way miters for traffic signal strain poles and equipment. Paving specifications to match existing pavement or better should be full-depth to the right of way line. **NOTE: Depths may be reduced, if field conditions warrant**.

If additional right of way is required in order to construct the required improvements, the applicant must dedicate the right of way. The applicant must record the plat and legal description at the County Courthouse and provide the original copy to the appropriate Traffic Engineer. See section 2.5 for details regarding RW dedication procedures. Desired right of way location in urban sections should be no closer than 14' from the face of curb. Desired right of way location in rural sections should be the point located one-half way up the back slope.

If existing utility easements are within the required right of way, the applicant must arrange for a replacement easement with written acceptance from the utility. At the discretion of the District Utilities Engineer or State Utilities Engineer, an Easement Limited Agreement may need to be executed by the Department on a form acceptable to the Department and utility. All right of way and utility issues shall be completed prior to the issuance of the permit.

Intentionally Left Blank

Chapter 5. Signing and Marking - Contents

Chapter 5. Signing and Marking - Contents 5-i
5.1 Signing 5-1
5.1.1 Types of Signs 5-1
5.1.2 Installation of Signs 5-1
5.2 Pavement Marking 5-1

Chapter 5. Signing and Marking

All signing and pavement marking must be designed and installed in conformance with the latest edition of the Manual on Uniform Traffic Control Devices (MUTCD). Reference is also made to the GDOT Signing and Marking Design Guidelines, current edition, which is available from the Office of Traffic Safety and Design.

5.1 Signing

All traffic signs shall be made using reflective sheeting mounted to aluminum panels (normally Type 1 panels) in accordance with Georgia Standard Specifications.

5.1.1 Types of Signs

All warning signs, red series regulatory signs, including Stop, Yield, and Do Not Enter signs shall be fabricated from Type 2 (Type II Wide Angle Prismatic) reflective sheeting.

Stop signs and Yield signs on all approaches to State Highways shall be 36” in width.

“No Parking” signs, R8-3 (24”x24”), should be recommended only after careful investigations from the District Offices, if the installation is necessary for deceleration lanes constructed in conjunction with driveway permits. One sign is required at the beginning of full-width deceleration lanes that are not longer than 200’. Additional signs should be installed for each additional 200’ of length.

All signs, except as noted above, shall be fabricated using Type 9 (High Intensity) reflective sheeting.

5.1.2 Installation of Signs

All sign posts to be placed within concrete area must have 6” wide diameter space through substructure.

Signs installed in conjunction with driveway permits are installed using either Types 7, 8, or 9 Square Tubing. Refer to the "**NOTE**" below for selecting the post type.

Signs should be mounted at a height of 7 feet above the edge of pavement to bottom of the sign. Signs should be setback from the edge of pavement by 12 feet or 6 feet from a paved shoulder (whichever is greater). The clearance to non-mountable curbs should be at least 2 feet.

NOTE: The current chart for the Types of Posts for Various Signs can be found on the current GDOT Construction and Details website under detail T03a or T03b.

5.2 Pavement Marking

Pavement markings are required to separate lanes of travel and should be used along all edges of pavement. The following guidelines are provided for designing and installing pavement markings for driveways:

- All pavement markings installed on asphalt within the public right-of-way shall be thermoplastic material; black/white contrast tape shall be installed for crosswalks on concrete.
- Lane lines are generally 5” (white),
- Stop lines should be 24” (white),
- Center lines should be 5” double yellow,
- Deceleration lanes and left turn lanes should have turn arrows (Type 2) spaced every 100’,
- Deceleration lanes do not require “ONLY” pavement, should be used through lane drop or trap lane.
- New construction should install 5” white edge lines, including at new curb & gutter.
- Raised pavement markers (RPMs) shall be installed for all new construction on roadways with existing RPMs.
- Crosswalks should use the current Georgia DOT standard (see Figure 4-11 A and B).
- Refer to GDOT Pedestrian & Streetscape Guide and GDOT Signing and Marking Guidelines.

Chapter 6. Drainage Design - Contents

Chapter 6. Drainage Design - Contents 6-i
6.1 Hydrology Reports 6-1
6.1.1 Drainage Areas 6-2
6.1.2 Runoff Determination 6-2
6.2 Drainage Design 6-2
6.2.1 On-Site Detention Systems 6-2
6.2.2 Driveway Drainage 6-2
6.2.3 Discharge into State Highway System 6-3
6.2.4 Miscellaneous Design Requirements 6-3

Chapter 6. Drainage Designs

Driveways that connect to the State Highway System must include drainage design that is functionally consistent with the drainage system of the highway. Drainage design for driveways should be consistent with the Georgia DOT Drainage Manual for Highways, current edition.

The following sections will summarize the drainage requirements for driveways, but the designer should consult the GDOT Drainage Manual for details of drainage calculations and design methodology.

6.1 Hydrology Reports

It is the responsibility of the applicant to provide appropriate drainage calculations and engineering design to prevent drainage problems arising due to increased runoff from developments. A hydrology report may be waived by the District Engineer or their designee for any commercial driveway permits.

Hydrology reports must be prepared under the supervision of an engineer registered in Georgia who must stamp and sign the report. The report must clearly show the drainage areas and the required runoff computations. A statement must be included that runoff conditions have been estimated in accordance with the GDOT Drainage Manual and that all drainage elements have been designed to accommodate the required discharge.

The general requirements of the hydrology reports are summarized in Table 6-1.

ITEM	NOTES
Runoff Calculations	Provide for each required storm frequency for both pre-developed and post-developed conditions 2, 5, 10, 25, 50, and 100 yr. storms.
Design of Structures	Provide design calculations for both inlet and outlet control.
Detention	If the post-developed discharge into the State Highway System is greater than pre-developed discharge, detention calculations must be provided.
Gutter Spread	Gutter spread calculations are required for the driveway if curb and gutter or header curb is used.

Table 6-1 General Requirements of Hydrology Reports

Separate drainage calculations must be provided for the pre-developed condition and for the proposed development. The report should clearly describe both conditions and give the area of each type of surface within the drainage area, including grassed, wooded, paved, etc. The runoff coefficients to be used in the calculations should be clearly stated.

The report should show the direction of runoff for both pre- and post-development conditions. The discharge points for each area must be provided.

The time of concentration should be given for each required storm frequency. The times for different types of flow (as outlined in DOT Drainage Manual) should be shown. Calculations shall be provided for all drainage structures for both inlet and outlet control. The calculations must be provided in report format and shall show the high water elevation above the inlet of the pipe or above the flow line of the grate.

6.1.1 Drainage Areas

Drainage areas should be outlined on county maps, aerial photographs, US Geological Survey contour maps, or other specially prepared maps. For municipal-type construction, city maps or other specially prepared maps should be marked to show the boundaries of the total area contributing to the project. The direction of flow should be marked using arrows.

It is often necessary to determine elevations to accurately show flow directions in gutters and along paved parking areas.

The elevation or difference in height between the most remote point in the drainage area and the inlet flow line of the drainage structure must be shown. Similarly, the maximum length of travel that water must flow from the most remote point must be shown.

6.1.2 Runoff Determination

The applicant's engineer should use the best method available for determining the storm runoff. For drainage areas up to 64 acres, (depending on the region) the rational method is recommended. For drainage areas greater in size, see GDOT Drainage Manual or USGS Publications: Flood-Frequency relations for urban streams and or techniques for estimating magnitude and frequency of floods in rural basins or Georgia. The drainage manual contains information that can be used to select the runoff coefficient based on the slope and surface of the drainage area and the soil type in the area. Methods for determining concentration times and rainfall intensity for certain storms and times of concentration are also provided in the drainage manual.

6.2 Drainage Design

Drainage design for driveways may include any or all of the following: on-site detention systems, drainage systems along the driveway, and connection to the highway drainage system.

6.2.1 On-Site Detention Systems

When the rate of discharge from the proposed development to the State Highway System is less than the rate at which runoff was discharged prior to the development, then detention is not required. Any discharge that has no more than 1 cfs increase for the 10 year storm and no more than a 1% increase for all storm events frequencies greater than the 10 year storm (25, 50, and 100) must be provided on the development site. If this cannot be done by the respective representative, then the case will have to be presented to the Office of Design Policy and Support – Hydraulics Group.

Detention ponds, if required, must be designed to accommodate the 2, 5, 10, 25, 50, & 100-year storm frequencies unless the local government has more stringent requirements.

The outlet structure of the detention pond must be designed to pass the 100-year storm flow without overtopping.

6.2.2 Driveway Drainage

Driveways should be designed with a low point prior to the connection with the State Highway so that surface flow will not run across the highway. However, in some cases this is not practical such as when the highway is in super elevation. In these instances, the design should minimize the

surface flow into the highway. This may require grated inlets into driveway culverts when the drainage system involves ditches. For surface systems, the addition of catch basins may be necessary to minimize gutter spread. Under these conditions, a minimum of one set of catch basins will generally be required prior to the highway connection unless gutter spread calculations indicate the need for more. Drainage inlets or catch basins may not be placed in or directly adjacent to the radius.

Ditches along driveways must be designed to accommodate the 25-year storm. Ditches must be designed and constructed to minimize erosion in accordance with provisions of the latest Georgia DOT Erosion Control Guidelines. If velocities exceed those permissible for grass lining, an alternate design must be used such as piping or paving the channel.

Side drain drainage systems along driveways must be designed for the 25-year storm. Curb inlets and grated inlets must accommodate the 10-year storm. The design must provide for inlets as needed to limit water spread to one-half of the outside travel lane.

6.2.3 Discharge into State Highway System

The design calculations must address any component of the State Highway Drainage System that will receive additional discharge above the pre-developed condition. When pipes are connected to the highway system, the pipe as well as the junction box must be designed for the 50-year storm.

Any additional surface flows from the development that drain onto the highway must be accounted for in the hydrology report. The calculations must ensure that gutter spread in the post-development condition does not go beyond one-half of the outside lane.

6.2.4 Miscellaneous Design Requirements

All pipes 48” and larger must have an inlet and an outlet headwall. Only safety headwalls or those specifically approved by the District Engineer are allowed. All side drain pipes up to 48” should have safety grate end treatments, unless located outside the clear zone or behind guardrail.

All cross drain pipes less than 48” located within the clear zone, as specified in the Road Design Guide, shall have safety inlets with grates.

In general, all structures that are to be extended should be extended in like kind, i.e. a box culvert with a box culvert. If special circumstances dictate otherwise, the applicant’s engineer must demonstrate that the alternate design has equal or greater capacity than the existing structure.

If additional fill material is placed over an existing structure, it must be analyzed for strength to carry the additional load.

The following minimum sizes should be used for drainage structures on the State Highway System:

- Box Culverts – 4‘ x 4’
- Cross Drain and Side Drain Pipes – 18”

Minimum clearance over structures is 1’ between the <u>bottom</u> of the sub pavement structure to the exterior crown of the pipe.

Pipes should have a minimum clearance of 0.5’ to any underground utility.

Pipe material used for commercial driveways within the right of way shall be concrete. HDPE may be used in accordance with the cross drain requirements for GDOT Construction Standard 1030P, if approved by the District Traffic Engineer prior to construction.

Pipe material used for residential driveways within the right of way shall be corrugated metal pipe, concrete, or GDOT Std. 1030P HDPE if approved by the District Traffic Engineer prior to construction.

Chapter 7. Special Encroachments - Contents

Chapter 7. Special Encroachments - Contents 7-i
7.1 Purpose 7-1
7.2 Scope 7-1
7.3 Allowable Encroachment Activities 7-1
7.3.1 Grading / Excavating 7-2
7.3.2 Aesthetics, Landscaping, Roadside Development and Maintenance 7-2
7.3.2.1 Grading and Landscape Permit Considerations 7-2
7.3.2.2 Mitigation 7-4
7.3.3 Groundwater Monitoring Wells 7-4
7.3.4 Film Production Activities 7-4
7.3.5 Race and Run Activities 7-5
7.3.6 Replacement of Limits of Access (L/A) Fence 7-5
7.3.7 Other Miscellaneous Activities 7-6
7.4 Special Encroachment Permit Procedures 7-6
7.4.1 Preliminary Plan Submittal 7-6
7.4.2 Initial GDOT Review Responsibilities 7-7
7.4.3 The Transportation Management Center Office Review & Approval for Encroachment Permits on Limited Access & Interstate R/W 7-8
7.4.4 Appeals 7-9
7.4.5 Conditions of Permit 7-9
7.5 Plan Requirements for Special Encroachments 7-9
7.6 Inspection and Acceptance of Work 7-11

Chapter 7. Special Encroachments

7.1 Purpose

This chapter describes the Department's process and standard of review to allow other entities to grade, landscape or otherwise conduct roadside encroachment activity within, under, or over State Highway and other limited access R/W. These actions will be allowed by permit from the Department as described in this document. Refer to GDOT Policies 6755-9 and 6755-11 for additional information.

7.2 Scope

The following activities are exempt from permits, but will still be required to comply with requirements in the GDOT Policy 6755-9:

- Contractors under a State Highway construction contract with GDOT and operating within their contract limits,
- Consultants under GDOT contract,
- Local agency forces with a maintenance agreement operating within their jurisdictional boundaries and within the scope of their maintenance responsibilities. Litter pick-up groups that have registered or receive oversight through the Adopt-A-Highway or Sponsor-A-Highway programs administered by the Office of Maintenance.
- **Billboard companies operating within the limits of a Vegetation Management at Outdoor Advertising signs permit. (Refer to policy 6170-1 – Vegetation Management at Outdoor Advertising Signs).**

No encroachment activity is allowed prior to obtaining a Special Encroachment Permit.

Any special encroachment permits that may be issued by the Department affecting the operation of Interstate R/W are subject to review and approval by the Federal Highway Administration (FHWA) before they are issued by GDOT. The FHWA has final approval authority.

There is no real or implied commitment intended in this policy to require the Department to issue a permit for any work on limited access R/W. Special Encroachments will generally not be allowed on active construction projects.

An encroachment permit is not a property right. It authorizes only the applicant or the applicant's agent to perform work. The applicant may not transfer or assign a permit to another party.

The responsibility for maintenance of permitted roadside landscape activities that are constructed on the R/W by entities other than the Department shall be borne by the permit entity.

7.3 Allowable Encroachment Activities

It is the desire of the Department to balance the requests of local government agencies, organizations, and owners of property adjacent to the interstate highways and other freeways and State Routes while providing a facility that possesses the optimum of utility, safety, beauty resource

protection, and economy. The following sections describe the general requirements and the types of activities that may be allowed.

7.3.1 Grading / Excavating

The elevation of the roadway may affect the ability of the adjacent property owner to fully utilize their property. In those cases, changes to the grade of the roadway R/W may be a less expensive option than the construction of a retaining structure outside the R/W. Where there is a documented benefit to the Department, applicants may be permitted to grade the right of way to reduce the cost of development. **Grading that requires tree removal within 500 feet of an outdoor advertisement sign is prohibited. For information about vegetation removal at signs, refer to the Policy and Procedures document 6170-1 Vegetation Management at Outdoor Advertising Signs**.

The following general requirements for grading or excavating must be adhered to:

1. Typically, if an earth embankment is in place, it may be lowered but not totally removed. In "cut" sections a berm of 4' to 6' in height may be required between the roadway ditch or curb and the right of way line to prevent headlight glare from adjacent properties onto the roadway.
2. All slopes associated with allowable grading on GDOT R/W shall be 4:1 or flatter.
3. Reimbursement for soil removal from GDOT R/W shall be at a current rate per cu/yd. determined by the local GDOT Area Engineer's Office. The Area Engineer's Office may elect to have the applicant deliver the soil to a specified location for use by GDOT in lieu reimbursement.
4. Mitigation or re-vegetation for vegetation removal, grading, or disturbance is required. Refer to the Policies and Procedures document 6755-9 Policy for Landscaping and Enhancements on the GDOT Right of Way.

7.3.2 Aesthetics, Landscaping, Roadside Development and Maintenance

Treatment of the highway or transportation facility and the roadside may be considered to conserve, enhance, and effectively display the indigenous character and quality of the environment it passes through by means of proper design, construction, and maintenance of their related features.

All landscaping, roadside development and maintenance shall conform to Georgia Standard Specifications, these procedures, and any procedures and manuals maintained by the Office of Maintenance. Copies of the Guide may be obtained by contacting the Office of Maintenance. The Policies and Procedures document 6755-9 Policy for Landscaping and Enhancements on the GDOT Right of Way.

7.3.2.1 Grading and Landscape Permit Considerations

The Department will give consideration for approval of grading and/or landscaping activities based on compatibility with primary use and protection of the State's investment in the highway facility.

Beneficial reasons for encroachment activity may include, but are not limited to the following:

- Improved shoulder or clear zone distances
- Improved drainage
- Elimination of hazards and/or guardrail
- Reduced maintenance costs

Applications are reviewed to determine the impact of the encroachment on the following:

- Safety of motorists, pedestrians, and workers
- Design, construction, operation, maintenance, or integrity of the highway system
- Future and on-going highway contracts
- Aesthetic corridor: regional context
- Environment
- Existing drainage

An encroachment activity may be considered when there is no cost to the Department and all negative real value changes to the R/W are reimbursed to the Department. **Items of real value include the costs for recurring maintenance, material removed, and the value of trees and other vegetation. Encroachments that devalue state right of way are not allowed.**

The applicant shall be responsible for all liability for personal injury and property damages for permitted activities. GDOT has no statutory authority to allow private use of highway R/W without compensation.

Permit applications may be acceptable if all the following items are satisfied:

1. GDOT is compensated for removal of soil or vegetation from the R/W.
2. No safety hazard is created.
3. Requirements for mitigation or re-vegetation for tree removal or disturbance are met.
4. No additional maintenance is created.
5. No additional liability is assumed by the State.
6. No transportation use restriction is created.
7. No unwanted easement or other permanent R/W encumbrance is created.
8. Activity will not be detrimental to the future use or expansion of the roadway.
9. A documented benefit to the Department is shown for any tree removal beyond what is required for driveway construction.

Permits will not be issued for encroachments if any of the following conditions exists:

1. The activity adversely affects the safety, capacity or integrity of the State Highway System.
2. The activity compromises or jeopardizes the drainage system on the R/W.

3. The activity is intended to daylight the property or enhances the visibility (within 500') of outdoor advertising signs. In addition, a commitment that outdoor advertising signs will not be placed on the property adjacent to the R/W is required for all permits. Refer to the Policies and Procedures document 6170-1 Vegetation Management at Outdoor Advertising Signs for more information about vegetation removal at signs.
4. The activity is to grade, remove or prune trees, shrubs and groundcovers when the Director of Operations has determined that the activities will significantly disrupt natural systems, roadside aesthetics, or have other negative impacts on the operation of the highway. Structural integrity and tree health as well as vegetative ground cover for erosion control are of primary importance to the maintenance of the R/W and shall not be compromised for purposes of grading to reduce development costs, day lighting, or landscaping development activities.
5. Vegetation and/or grading for "daylighting" purposes when there is no benefit to the R/W or traveling public.
6. Encroachment that devalues the state right of way.
7. The applicant has not complied with the provisions of prior permits.
8. The proposal involves removal of vegetation within buffers of state waters. .

7.3.2.2 Mitigation

For mitigation information refer to the Policies and Procedures document 6755-9 Policy for Landscaping and Enhancements on the GDOT Right of Way.

7.3.3 Groundwater Monitoring Wells

Requests for installation of groundwater monitoring wells on State Routes or on Interstate R/W are transmitted from the District Traffic Operations Offices to the Materials & Research Laboratory for review and approval. FHWA approval is not required for ground water monitoring wells within the Interstate R/W.

7.3.4 Film Production Activities

As Georgia has become more popular as a location for television and film, there has been increasing demand for use of the State Highway System for locations. In order to facilitate the timely and orderly review of these requests the Department has established policies for such uses. For television and film information and film fees, refer to the following Policies and Procedures documents:

- 6755-12 - Granting Permits for Requests to Use Right of Way for Movie and Television Production
- 6755-12b – Film Permit Fees

See Appendix G for Exhibit 2, Hold Harmless, Hold Harmless Addendum, and contacts list.

7.3.5 Race and Run Activities

For temporary road or lane closures, or pace activities on State Routes for race/run events, the following procedure will be used:

The event organizer shall submit a letter of request to the appropriate District Engineer, or State Traffic Engineer for events occurring in multiple districts. The letter should include information regarding the date, time, and location of the event, with contact information for the responsible parties. Proposed traffic control and event signing information should be included with the request as well as specific route information details either in the letter or in an attachment.

Events taking place in one district will be reviewed and approved in that district. Events which overlap partially into another district may be reviewed and approved in the district in which the majority of the route occurs, at the discretion of the District Traffic Engineer with concurrence from the other District Traffic Engineer. If on L/A, must attain approval from the State Traffic Engineer.

Events in multiple districts will be reviewed and approved in the State Traffic Engineer's office. The route details shall then be reviewed by each of the District Traffic Operations Office and their comments or changes coordinated and provided to the event organizers.

Approval letters will include the following statements:

- The approval is only valid for the state routes listed in the submittal. Local roadways require coordination with the appropriate local governments.
- The event organizers shall be responsible for all traffic control and security for the state routes, including coordination with police escorts provided by state and local law enforcement agencies, and uniformed police stationed at affected intersections
- The event organizers shall be responsible for the installation of temporary signing and the timely removal of the signing from the state routes.
- All traffic control and signing shall adhere to the Department's current specifications and the most current edition of the MUTCD for the duration of the closure.
- The event organizers and sponsors of this event agree to hold harmless the Georgia Department of Transportation, its officers, agents, and employees from any and all claims for damages during this event.

Distribution of Approval Letter w/Attachments
State Traffic Engineer
District Engineer(s)
District Maintenance Engineer(s)
Area Engineer(s)
District Communications Office(s)
TMC Operations Manager(s)

7.3.6 Replacement of Limits of Access (L/A) Fence

All L/A fencing removed during construction must be replaced. If not removed during construction, replacement of L/A fencing may be considered for the following reasons:

1. To provide greater protection from R/W encroachments from adjacent property as well as improve security for adjacent development.

The replacement shall be in conformance with the following:

1. The L/A fence must be replaced with Georgia DOT standard fencing, in like kind or 6' chain link, or as directed by the State Traffic Engineer, along the original location. The applicant must either replace the L/A fence at the end of each day of work or install a temporary construction fence.
2. No gates will be allowed along the L/A on interstate rights of way without approval.
3. If fencing other than the standard woven wire or chain link in conformance to GDOT standards is proposed, it must be installed a minimum of one foot inside the applicant's property and the applicant must agree to maintain the fence. (L/A fence must be in place.) Submit fence detail. The fence must be approved by Department prior to installation.
4. The fence must be replaced, if removed by the applicant.

7.3.7 Other Miscellaneous Activities

Requests for activities not addressed specifically by these procedures may be permitted at the discretion of the Department, upon Federal Highway approval as necessary or required. Fund-raising activities that include pedestrians in the travelway on state routes is prohibited.

7.4 Special Encroachment Permit Procedures

7.4.1 Preliminary Plan Submittal

All plans developed for a Special Encroachment Permit shall be submitted through GPAS AMPS (Refer to the Access Management Permitting System Tutorials). The District Traffic Engineer/Manager will be responsible for administration of a thorough plan review among the following District offices or units: Traffic Operations, Roadway Design / Hydraulics, Environment and Location, Right-of-Way/Outdoor Advertising, Utilities and Maintenance. Plans should be reviewed by these offices as needed.

The applicants will have 90 calendar days to revise the plans. New application submittal packages will be required after 90 days. The applicant shall submit one (1) copy of the revised plans for final review to the District Traffic Engineer/Manager.

The District Traffic Engineer/Manager will only check resubmitted plans. The District Traffic Engineer/Manager should sign the final plans near title block of sheet one. District units will not be required to recheck revised plans, unless the District Traffic Engineer/Manager requires a unit to recheck a plan prior to final approval. If modifications to the plan are beyond the comments made or a major modification is made for other reasons, the plan should be treated as a preliminary submittal and rechecked by other units. Once the plans are submitted, a thorough internal review will be conducted within the department, which shall include, but not to be limited to the following sections:

- A cursory review by FHWA may be deemed necessary if the proposed special encroachment is located on limited access right of way.

7.4.2 Initial GDOT Review Responsibilities

The District Traffic Engineer/Manager will review the encroachment permit plans for conformance with requirements for clear zone, sight distance, pedestrian access, lighting, work zone traffic control plans, and conflicts with proposed and active DOT construction projects. A copy of the plans may be submitted to other District or State Offices for review and comment by these units prior to approval of the permit through GPAS AMPS Adhoc Reviewer:

1. **District Design**

   This office checks for compliance with the GDOT Drainage Manual and erosion control procedures.

2. **District Utilities Office**

   The applicant shall provide the District Traffic Engineer/Manager with copies of all Utility information including 1.) Utility Encroachment Permits (DOT 8413A), no conflict letters, no facilities letters, or 2.) existing and proposed easements and one review copy of the plans. The District Utilities Engineer shall check for compliance with the Utility Accommodation Policy and Standards Manual, current edition. Once the plans and letters are received, the District Utility Engineer will coordinate with the District Traffic Operations Engineer for approval.

3. **District Right-of-Way**

   This office checks for compliance with regulations for limited access.

4. **General Office Maintenance**

   The Office of Maintenance – Landscape Architecture Unit checks for compliance with the Policy and Procedures document 6755-9 Policy for Landscaping and Enhancements on the GDOT Right of Way when vegetation removal or new plant material or roadside enhancements are proposed. The may be asked to check for sight distance requirements, vegetation/utility conflicts, clear zone requirements, horizontal clearance requirements, plant maintenance and watering needs, and for exclusion of invasive plant material. Refer to chapters 3 and 4 of this document for information out sight distance and clear zone requirements. This office also checks for the effect of proposed improvements on existing outdoor advertising signs. No landscape or vegetation removal activity shall be permitted within 500' of an existing sign location that affords a sign increased visibility.

5. **General Office Design**

   This office will review plans for sites located within planned or active construction projects for conflicts and tie-ins with the project design. Permits approved within active construction projects will require coordination with the GDOT contractor.

6. **General Office Environment and Location**

   This office will check for compliance with environmental laws and regulations and determine if a federal Categorical Exclusion (CE) or Programmatic Categorical Exclusion (PCE) may be required. If required, the applicant shall provide information and studies based on the protection and preservation of cultural resources (historic and archaeological), natural resources (wetlands, stream impacts and survey results for Threatened and Endangered

Species), physical environment (air and noise impacts) and evidence of the appropriate environmental permits from other agencies.

7.4.3 The Transportation Management Center Office Review & Approval for Encroachment Permits on Limited Access & Interstate R/W

When the plans or resubmitted plans have been reviewed by the District Traffic Engineer/Manager and are determined to be recommendable from the District Office, the applicant shall be required to sign and execute a Mowing and Maintenance Agreement for final approval.

The District Traffic Engineer/Manager will transmit a letter requesting action to the Office of Traffic Operations through GPAS AMPS. This transmittal may include the signed and executed Mowing and Maintenance agreement, appropriate bond or escrow amounts and levels of insurance, District contact name and telephone number, etc. Mowing & Maintenance Agreements can be done after permits' execution.

The Office of Traffic Operations will submit the proposed special encroachment application to the appropriate office and FHWA if applicable, for review through GPAS AMPS. Comments and proposed changes will be forwarded to the Office of Traffic Operations. If a plan revision is deemed necessary, the applicant will receive a notification through the GPAS application software. If no changes are made or have already been addressed, the next personal in the flow will receive the permit. If plan revisions are necessary, the Office of Traffic Operations will request these revisions be made in communication with the applicant through GPAS.

The following are exempted from FHWA review:

- Landscaping projects that meet current policy, Policy and Procedures document 6755-9 Policy for Landscaping and Enhancements on the GDOT Right of Way.
- Installation of groundwater monitoring wells,
- Engineering services, such as surveying, subsurface investigations, etc., that is being performed for governmental agencies.
- Utility encroachments, unless they contain an exception to the GDOT Utility Accommodation Policy and Standards (UAPS).

Approval of the permit will include a recommendation by the Division Director of Operations and the Chief Engineer with final approval by the Commissioner. For permits requiring FHWA approval, a copy of the GDOT-approved plans will be sent to FHWA for review and approval by email or by the use of the Adhoc Reviewer through GPAS AMPS, if applicable.

A notification will be sent to all users associated with the permit through the GPAS AMPS application software when the permit has the final approval. Applicant submittal of all requirements including bonds, insurance, etc. must be made prior to a DocuSign from the applicant. Local and city governments may be exempt from bond requirements.

The approval letter from the District Office to the applicant will include a distribution to the Office of Traffic Operations and the Federal Highway Administration.

7.4.4 Appeals

When the District Engineer or delegated representative denies a Special Encroachment Permit in writing for activities not reviewed by the Federal Highway Administration, the applicant may appeal to the Director of Operations in writing, within 60 days after permit denial. There is no appeal process within GDOT for activities denied by the Federal Highway Administration.

The following items should be included with requests for appeals:

- The applicant's name and company or organization, address, telephone number, name of applicant's agent (if applicable), address, and telephone number.
- The project's location including county, route, and milepost.
- Project description along with any pertinent plans or drawings (minimum 3 copies each).
- The reason why the proposed project or activity should be permitted. This information should include a full explanation of the perceived hardship. Hardships cannot be self-imposed. Include available alternatives to the proposed encroachment, together with costs and potential consequences if the requested encroachment is not approved. Also, provide the expected benefits to the State that would accrue by proceeding as proposed.

7.4.5 Conditions of Permit

The permit will be valid for a specific period of time as established by the Department after consultation with the applicant.

The permit will become part of a perpetual R/W Mowing and Maintenance Agreement. A letter may be required to express concurrence/endorsement between local government and other property owners/agencies or organizations that are adjacent to the areas proposed for change.

The work must be performed according to permit and approved plans. Access to the work area should be from the abutting property, not from the traveled way, when feasible. When working within 32' of a roadway and within Department R/W, conformance to standard safety and traffic control policies (MUTCD) is required. Submittal of a work zone traffic control plan will be required.

7.5 Plan Requirements for Special Encroachments

Plans shall include and/or be in accordance with the following:

1. An overall site plan and location sketch map.
2. Plans shall be an accurate and legible representation of the existing conditions or features (above and below ground), existing contour lines (show as dashed lines) and elevations sufficient to show the natural drainage features within the property to be developed. The maximum acceptable contour interval shall be 2'. All of this information should include any elevations needed to show how the water flows once it leaves the property.
3. All proposed work including changes to trees, vegetation and contours. Two plans may be necessary for complete explanation, one for existing and one for proposed. If only one plan is provided showing both, the existing features will be shown using dashed lines. For clarity, it is important that landscape improvements be dimensioned from a fixed point of beginning.

4. North arrows on all drawings and maps.
5. The scale of the drawings should be 1” = 50' or larger. If a smaller scale is used for "overall plans", then enlarged details of the work on the right of way must be furnished on a 1" = 50' or larger scale.
6. Locations of all property lines and/or right-of-way fence, easements, above and below ground utilities, curbs, curb types, ADA wheelchair ramps –location & type, edge of pavement (edge of travel lane), guardrails, sidewalks, intersections, median breaks, driveways, bike lanes, surveying monuments, signs, permitted billboards, lighting, traffic signals, other traffic control devices, drainage features, roadway geometries, limit of clear sight line, wheel chair ramps, clear zone setbacks.
7. Existing off site features such as the names and types of businesses (if applicable) and/or the property owner on either side of the R/W proposed for change.
8. The distances from the centerline of the highway or road to the R/W line and the distance from one corner of the property, along the R/W line of the abutting road, to the centerline of the nearest named street, road or highway. **A general statement such as "Right-of-Way Varies" is not acceptable**. Roadway design or R/W plans can be viewed at the District and General Offices’ plans file rooms.
9. **State Route Numbers** and U.S. Route Numbers (if applicable) and names of all highways, ramps and roads shall appear on the plans. Designations such as "County Road", "Cross Road" or "City Street" are not specific enough and should not be used.
10. The DOT milepost estimated to the nearest tenth of a mile to some point on the area of the permit (shown on the plans).
11. **Posted speed limit** of adjacent travel way.
12. All existing DOT signs within the R/W being changed.
13. The total length of frontage of the property owned, and if different, the length of R/W being changed under the permit.
14. All existing vegetation, refer to Policy and Procedures document 6755-9 Policy for Landscaping and Enhancements on the GDOT Right of Way for information about landscape plan requirements.
15. The location of any existing outdoor advertising signs within 500 feet of the limits of the project (those that could be affected by the work in terms of location or sight lines.
16. A title block showing the name of the property owner (and the permit applicant, if different from the property owner) and the county in which the project is located. The name of the engineer, landscape architect, or individual that prepared that plans should also be included.
17. Scaled Drawings (36”X24”) maximum size sheets will be accepted for the review process.
18. Photography, or video, of the site showing existing features.
19. A landscape plan in conformance with Policy and Procedures document 6755-9 Policy for Landscaping and Enhancements on the GDOT Right of Way.

20. A maintenance plan in conformance with the Policy and Procedures document 6755-9 Policy for Landscaping and Enhancements on the GDOT Right of Way.
21. When necessary to perform work within 32 feet of the edge of pavement and/or access to site is from the roadway, a traffic control plan, in conformance to MUTCD standards, is required.
22. Sprinkler Systems and clear zone setbacks must comply with Policy and Procedures document 6755-9 Policy for Landscaping and Enhancements on the GDOT Right of Way.
23. When necessary to prevent erosion during construction, an erosion control plan shall be prepared in accordance with GDOT standards. If the disturbed is over 1 acre, a NOI will be required. Disturbed areas should be stabilized daily.
24. Location of buffers of state waters or streams within the project site.
25. Show all existing utilities, above and below ground.
26. Inventory of any trees 4 inches or greater in diameter that are proposed for removal.
27. Inventory of the square feet of any native understory vegetation less than 4 inches in diameter proposed for removal.

7.6 Inspection and Acceptance of Work

Throughout any plant establishment maintenance period, the assigned Permit Inspector shall inspect the maintenance of the permitted activities to ensure conformance to maintenance standards.

On all landscape or permitted activities, prior to acceptance or release of bonds, the applicant initiating the work is responsible for preparing accurate as-built drawings. After the final inspection and acceptance of the work, the Permit Inspector shall notify the District Traffic Engineer/Manager to release bonds. The District Traffic Engineer/Manager is responsible for acquiring and checking as-built drawings against approved plan drawings and completed work.

Any changes, caused by unforeseen on-site conditions, during the construction or maintenance of the work must be officially revised and added to the permit file plans for permanent record. A copy of the letter of acceptance to the applicant will be sent to the District Office of Maintenance and the appropriate Area Engineer's Office for use in scheduling yearly inspections and maintenance related correspondence.

Intentionally Left Blank

Chapter 8. Residential Driveways - Contents

Chapter 8. Residential Driveways - Contents 8-i
8.1 Side Drain Pipes 8-2
8.2 Farm Use, Logging & Mining Driveways 8-2
8.3 Utility Driveways 8-3

Chapter 8. Residential Driveways

Residential Driveway Permits are administered by the GDOT Area Engineer. The Area Permit Inspector for commercial driveways is usually the same person who handles residential driveways. The Permit Inspector will advise the Applicant regarding location of the drive, the size pipe, if required, to be placed under the driveway, and approve the grading plan from the outer edge of the shoulder of the road to the R/W line.

Locations for residential drives should be based on existing conditions. While separation from existing drives is desirable, residential drives should be located to provide the safest possible ingress and egress based on sight distance and roadway characteristics. Individual drives shall not be approved for newly subdivided lots of less than 5 acres. Subdivision streets or shared drives shall be used to provide access to smaller lots or subdivided properties.

Residential driveways are, as the name implies, driveways to private residences. Normally they are 14 to 16 feet wide. It is recommended that turnarounds be provided to avoid vehicles backing into the highway. Under special circumstances, certain design vehicles require more width to safely negotiate a turn into or out of the drive without stopping and/or backing on the roadway. The Area Engineer may approve a driveway up to 20 feet wide.

If the driveway is paved, but without curb and gutter, at least a two (2) foot shoulder along the drive and around the radii before beginning the slope down to the drainage ditch is desirable. The front slope, back slope and the slope around the end of the drain pipe under the drive, if present, should be the same as if it were a commercial driveway.

Where the ends of side drain pipe are exposed to traffic inside the clear zone, safety slope end sections are required. Flared end sections may be used behind guardrail or outside the clear zone. All side drain pipes larger than 48 inches must have an inlet and an outlet headwall. Only safety headwalls or those specifically approved by the District Engineer are allowed. Refer to the current Georgia Standard.

On residential driveways this can be accomplished in several ways. If the pipe is corrugated metal and the applicant chooses to cut the end off to provide a 6:1 or flatter slope, he/she may install a concrete “collar” around the pipe end to provide stability and control erosion.

It is the responsibility of the property owner to provide routine maintenance of the pipe and driveway up to the roadway edge of pavement without making improvements to it as governed by the permit process.

Refer to Appendix A for the GDOT Area Offices contact information and locations and Appendix C for Residential Driveway Permit Request form.

8.1 Side Drain Pipes

Applicants may choose to use reinforced concrete, corrugated aluminum, corrugated galvanized metal, asphalt coated galvanized metal, high-density polyethylene (HDPE), or along low volume roads (less than 1,500 ADT) smooth lined corrugated Polymerizing Vinyl Chloride (PVC) pipe, when used in accordance with the Department's current guidelines. As stated above, safety end treatments will be required on all side drain pipes on all State Routes, unless they are located outside the clear zone or behind guardrail. This is required primarily for safety reasons. This enables an errant vehicle to travel across and over the end of the side drain pipe instead of coming to an abrupt halt, usually resulting in serious injury to the occupant(s) of the vehicle. It also helps control erosion and makes grass mowing easier and safer.

8.2 Farm Use, Logging & Mining Driveways

These driveways are to be permitted by the Area Engineer in a manner similar to a Utility Driveway. A logging driveway will usually be a temporary drive which will either be removed when the logging operation is completed or left in to become a farm use driveway. A mining operation may require a more substantial design to function properly.

8.3 Utility Driveways

Utility driveways for access to utility sites such as power substations, water tanks, or telephone service sites are to be permitted by the Area Engineer and should be treated much the same as a residential drive for design and sight distance. The Area Engineer should bear in mind that the drive must function in a manner which will allow the utility vehicle to pull completely off the roadway without stopping and backing into the drive or having to back out into the roadway when exiting the driveway. The vehicle must not reduce sight distance for driveways located along the same section of roadway. A utility driveway will normally not count as one allowed access point along an applicant's frontage, depending on the length of frontage and safety considerations. A typical utility driveway layout is shown in Figure 8-1.

The most important aspect of granting a permit for a utility driveway is coordination with the Utility before they purchase the site or obtain an easement. If the Area Engineer needs assistance before granting access to a Utility, they should call the District Traffic Engineer.

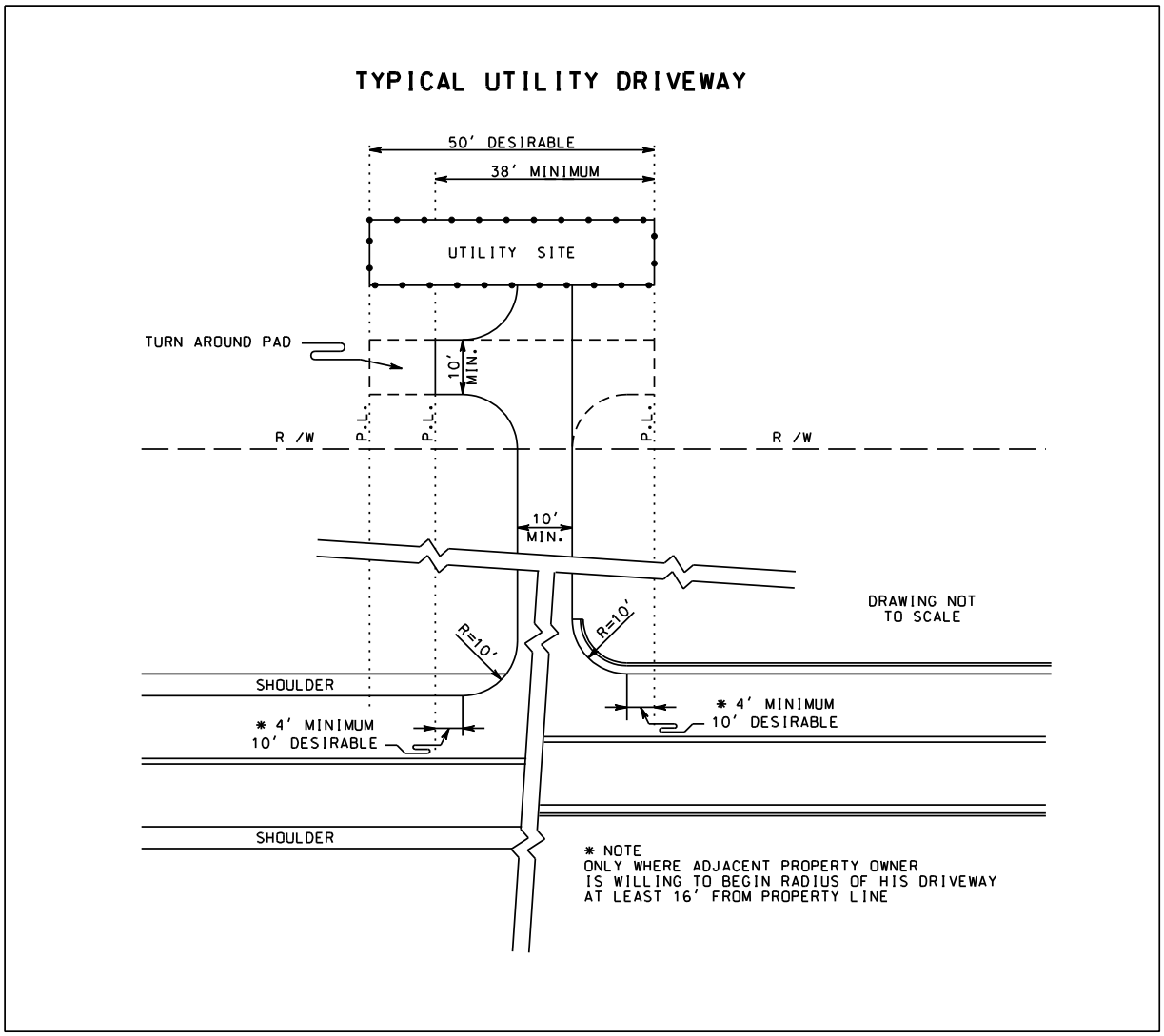

Figure 8-1 Typical Utility Driveway

Intentionally Left Blank

Chapter 9. Mailboxes - Contents

Chapter 9. Mailboxes - Contents 9-i
9.1 Purpose 9-1
9.2 Acceptable Standards for Residential Mailboxes 9-1
9.3 Policy 9-1

Chapter 9. Mailboxes

Mailboxes supported by structures such as masonry, stone, rail road ties, tractor wheels, plow blades, concrete filled barrels, or other material that can cause damage to a vehicle or interferes with the safety of the traveling public are considered a Right of Way Encroachment. Georgia Code Section 32-6-1 states that such encroachments or obstructions are unlawful on “any public road”.

9.1 Purpose

Under O.C.G.A. Section 32-6-1, the Department can legally determine that any structure on a state R/W is an obstruction and require its removal. However, in order to give appropriate notice to the public of which mailbox supports may be replaced on state R/W, and those which will be considered an obstruction or encroachment upon state R/W, the following rules are to be followed.

9.2 Acceptable Standards for Residential Mailboxes

Mailboxes shall be of light sheet metal or plastic construction conforming to the requirements of the U.S. Postal Service. Newspaper delivery boxes shall be of light sheet metal or plastic construction of minimum dimensions suitable for holding a newspaper.

1. Mailboxes supports shall not be set in concrete unless the support design has been shown to be safe by crash tests when so installed.
2. A single 4”X 4” or 4”diameter wooden post or a 1.5” light-gage pipe embedded no more than 24” into the ground is the typical preferred mailbox support. A metal post shall not be fitted with an anchor plate, but it may have an anti-twist device that extends no more than 10” below the ground surface.
3. The post-to-box attachment details should be of sufficient strength to prevent the box from separating from the post top if a vehicle strikes the installation.
4. The minimum spacing between the centers of support posts shall be three-fourths the height of the posts above the ground on multiple mailbox installations.

9.3 Policy

No mailbox or newspaper delivery box will be allowed to exist on State Right of Way if it interferes with the safety of the traveling public or the function, maintenance, or operation of the highway system. A mailbox installation that does not conform to the provisions of this regulation is an unauthorized encroachment under Georgia Code Section 32-6-1.

The location and construction of mailboxes shall conform to the rules and regulations of the U.S. Postal Service as well as to standards established by the Department. Department standards for the location and construction of mailboxes are available from the Area Engineers Office or the District Maintenance Office.

To help prevent future confusion on this subject, a copy of the Acceptable Standards for Residential Mailboxes, which governs the location and construction of mailboxes on the State Right of Way shall be attached with all issued Residential Driveway Permits.

Intentionally Left Blank

Chapter 10. School Driveways - Contents

Chapter 10. School Driveways - Contents 10-i
10.1 Concept Review 10-1
10.2 Driveway Permit and Site Design 10-1
10.2.1 Driveways 10-2
10.2.2 Driveway Spacing 10-2
10.2.3 Driveway Location and Design 10-2
10.2.4 Internal Design 10-2
10.2.5 Site Recommendations 10-3
10.3 School Speed Zones 10-3
10.3.1 School Speed Zone Limits 10-3
10.3.2 Flashing Speed Limit Assemblies 10-3
10.3.3 Automated Traffic Enforcement Safety Device (ATESD) 10-4
10.4 Proposed Traffic Signals 10-4

Chapter 10. School Driveways

Cooperation between the school system, the Georgia Department of Transportation (GDOT), and the local governing agency is necessary to plan and complete any road improvements related to the construction of a new or redeveloped school located on or within the impact area of a State Route. The Georgia Department of Education Facilities Section publication, A Guide to Site Selection, 160-5-4-.16 (a) 6, applies to the purchase of all new sites on which an education facility will be constructed, the purchase of additional acreage for an existing educational site, existing sites on which a new educational facility will be constructed, or any leased or privately owned site on which public school students will be attending school. The guide requires the GDOT Local Grants Office be notified of the location and circumstances for each site prior to formal site approval by the Facilities Services Unit. It is recommended that private schools and daycare facilities follow the guidance in this section when selecting a site and designing a facility.

10.1 Concept Review

Prior to the purchase of a new school site, development of new facilities on existing sites, or redevelopment of existing school sites, the school district should submit a preliminary plan to the Department for a Concept Review. The plan should include a "rough plat" map of the acreage with a footprint of the development, internal circulation, driveway placement, and surrounding roadways and intersections. The type of school(s) and student population anticipated for the site should be included, along with any other information available at the time of submission. Two copies of the concept plan should be sent to the appropriate District Traffic Operations Office (see Appendix A). An additional copy should be sent to:

State Traffic Engineer
Georgia Department of Transportation
935 United Avenue, Building 24
Atlanta, GA 30316

The District will have twenty (20) days to perform a site inspection and provide an assessment of the driveway locations and the required roadway improvements. An onsite meeting between GDOT and representatives from the local school system and/or their engineer may be required in order to provide comprehensive comments. The comments will be sent directly to the submitting school district and copied to the State Traffic Engineer's Office, the Local Grants Office, and the Local Government Planning Office.

10.2 Driveway Permit and Site Design

Approval of a GDOT Driveway Permit for access to the State Highway System is necessary to plan and construct any road improvements related to the opening of a new school facility. A request for a Driveway Permit should be directed to the appropriate District Traffic Engineer, including a plan addressing access to the site, driveway placement, roadway improvements, site design with internal traffic flow, bus/car stacking, existing and projected traffic volumes, and safety impacts. If the school is located at or adjacent to an existing or proposed traffic signal, or if requested by the Department, a Traffic Impact Study or Signal Warrant Analysis shall be submitted with the permit

request. If a School Zone Flasher is requested, it should be included with the plans to be coordinated with the Driveway Permit, however will be in accordance to section 10.3.2.

10.2.1 Driveways

Site access from two different roads is preferable. In most cases, in order to ensure proper distribution of traffic, elementary and middle schools should have two separate driveways. One drive is needed to serve the bus loop, while the other is necessary to serve the parent drop off loop. Bus traffic and car traffic should be separated whenever feasible. High schools should have a third drive to separate and serve student parking. By default, high schools with a student population greater than 2,500 should have two separate student drop off loop driveways.

10.2.2 Driveway Spacing

The desirable distance between school driveway is 600 feet or greater, and a minimum 450 feet required, allowing for adequate left turn lane development. Driveway spacing and left turn lane requirements are greater for school facilities than for typical commercial developments because of the size of school busses, and because peak hour volumes are concentrated with morning school take-in and afternoon dismissal times that coincide with typical peak hour volumes. Additional left and right turn lane storage over the minimum commercial requirements should be based on the size of the facility, student and staff population.

10.2.3 Driveway Location and Design

At a minimum, all school driveways are required to have left turn lane and right turn deceleration lanes. Driveway locations must meet minimum sight distance requirements for the posted speed limit and roadway type shown in Table 3-4. Location of the driveways should meet minimum spacing from existing driveways and intersections, and may not encroach within the functional limits of an intersection. Proximity to the nearest signalized intersection should be considered. Bus entrances should be designed with wider lane widths and radii than standard minimums. Entrance radii should be a minimum of 50 feet, and entrance lanes a minimum of 18 feet. Pedestrian accommodations should be included at the driveway entrances.

School sites on divided highways should include right-in/right-out only drives, or be located at an existing, an approved or new median opening (Opening will have to follow and be approved by the ICE Policy).

10.2.4 Internal Design

It is essential to design internal school drives in a manner that will provide sufficient on-site stacking length for both bus and drop off traffic. Insufficient internal stacking results in poor traffic operations at peak hours, and safety concerns on the roadway. Recommended stacking lengths are based on the type of school and student population size.

School Type	Student Population	Loop Drive Stacking Length, FT.
Elementary	200 – 600 600 – 1,400	900 – 1,200 1,200 – 1,500
Middle	200 – 600 600 – 1,200	900 – 1,200 1,200 – 1,500
High	400 – 800 800 – 2,500	800 – 1,200 1,200 – 1,500

***Conform with chart for private schools**

10.2.5 Site Recommendations

- Buildings should be set back a sufficient distance from the roadway to allow traffic loops with adequate stacking for loading and unloading students
- Student drop off/pick up areas should be separate from bus loading/unloading activities by constructing separate driveways with loops that function separately.
- Bus and car loops should circulate in counterclockwise direction so that loading and unloading occurs from the passenger side next to the curb.
- Bus circulation and parking layout should be designed to prohibit buses backing up on the site.
- Parking stalls for a full size bus should be a minimum of 15 feet wide. Smaller spaces may be provided for mini-buses and other specifically sized vehicles.
- Parking stalls along loop drives should be placed at an angle to facilitate a one way traffic flow, and discourage wrong way use.
- Pedestrian and bicycle traffic should have a designated safe path between any road and the school buildings.
- Student parking areas should be separated from staff/visitor/bus parking and student loading/unloading areas.

10.3 School Speed Zones

10.3.1 School Speed Zone Limits

Schools with a multiple grades and enrollment over 350 students and staff may be considered for school speed zones on a case by case basis. An Engineering and Traffic Investigation Report is required for the establishment of a school zone speed limit, or the modification of an existing school zone speed limit.

10.3.2 Flashing Speed Limit Assemblies

School Zone Speed Limit Flasher Permit requests must be submitted by the local government along with the report and a letter showing support and agreement for establishment of a school speed

zone with flashing speed limit indications by the department's electronic website GPAS SPA (Refer to the Signal Permitting Application Tutorials). Before a request for a School Zone Speed Limit Flasher Permit can be implemented, a school speed zone must be established or be requested and approved by ways of GPAS AMPS. If a permit is approved by GDOT, the local governing agency or School Board will be responsible for all cost associated with establishing power service to any proposed flashing assemblies. Ongoing maintenance and operation of any permitted school zone flashers may become the responsibility of the requesting agency associated with the request.

10.3.3 Automated Traffic Enforcement Safety Device (ATESD)

Automated Traffic Enforcement Safety Device (ATESD) is capable of producing photographically recorded still or video images, or both, of the rear of a motor vehicle including an image of such vehicle's rear license plate while also capable of monitoring the speed of a vehicle. The ATESD will indicate on each photographed recorded still or video image produced with the date, time, location, and speed of a photographically recorded vehicle traveling at a speed above the posted speed limit within a marked school zone.

In order to obtain an ATESD, an established school zone must be in existence. The Applicant then must complete the Automated Traffic Enforcement Safety Device Permit Form and submit it to the Department. The Automated Traffic Enforcement Safety Device Permit Form shall include sufficient information and documentation for the Department to determine the need for such permit.

Refer to the Automatic Traffic Enforcement Safety Device (ATESD) homepage to retrieve the Permit Application and the overview of the Rules and Regulations.

10.4 Proposed Traffic Signals

Requests for traffic signals associated with school access onto state routes will be evaluated as described in section 2.5.2. The request shall be coordinated with the Driveway Permit request and must be approved prior to approval of the Driveway Permit.

Appendix A. Contact Information

DISTRICT	LOCATION AND MAILING ADDRESS	PHONE NUMBER
1	1475 Jesse Jewel Pkwy NE, Suite 100, Gainesville, GA 30501	770-533-8965
2	PO Box 8 643 Hwy 15 South Tennille, GA 31089	478-552-4601
3	115 Transportations Blvd. Thomaston, GA 30286	706-646-6900
4	710 West 2nd Street Tifton, GA 31794	229-386-3280
5	PO Box 610 Jesup, GA 31545	912-427-5711
6	30 Great Valley Parkway White, GA 30184	770-387-3602
7	5025 New Peachtree Rd. Chamblee, GA 30341	770-986-1011
TMC	935 United Avenue, Building #24 Atlanta, GA 30316	404-635-2828

DISTRICT 1 AREA OFFICES

Gainesville Area Office - Area One	Counties Served
2594 Gainesville Hwy. Gainesville, GA 30507 Telephone: 770-532-5500 Fax 770-531-6455	Dawson Forsyth Gwinnett Hall

Athens Area Office – Area Two	Counties Served
450 Old Hull Road Athens, GA 30601 Telephone: 706-583-2644 Fax 706-583-2655	Barrow Clarke Jackson Oconee Walton

Carnesville Area Office – Area Three	Counties Served
301 Conger Road Carnesville, GA 30521 Telephone: 706-384-7269 Fax 706-384-3911	Banks Elbert Franklin Hart Madison Stephens

Cleveland Area Office - Area Four	Counties Served
942 Albert Reed Road Cleveland, GA 30528 Telephone: 706-348-4848 Fax 706-348-4851	Habersham Lumpkin Rabun Towns Union White

DISTRICT 2 AREA OFFICES

Milledgeville Area Office - Area One	Counties Served
161 Blandy Road Milledgeville, GA 31061 Phone: (478) 445-5130 Fax No: (478) 445-1435	Baldwin Hancock Putnam Washington Wilkinson

Dublin Area Office - Area Two	Counties Served
2003 US Highway 441 South Dublin, GA 31021 Phone : (478) 275-6596 Fax : (478) 274-7920	Bleckley Dodge Johnson Laurens Treutlen

Louisville Area Office - Area Three	Counties Served
2971 US Hwy 1 North Louisville, GA 30434 Phone: (478) 625-3681 Fax: (478) 625-3682	Burke Emanuel Glascock Jefferson Jenkins

Augusta Area Office - Area Four	Counties Served
4260 Frontage Road Augusta, GA 30909 Phone: (706) 855-3466 Fax: (706) 855-3479	Columbia Lincoln McDuffie Richmond Warren Wilkes

Madison Area Office - Area Five	Counties Served
1570 Bethany Road Madison, GA 30650 Phone: (706) 343-5836 Fax: (706) 343-0051	Greene Jasper Morgan Newton Oglethorpe Taliaferro

DISTRICT 3 AREA OFFICES

Thomaston Area Office – Area One	Counties Served	
101 Transportation Blvd. Thomaston, GA 30286 (706) 646-6100 / (706) 646-6099 Fax (706) 646-6105	Butts Henry Lamar Pike	Spalding Taylor Upson

Columbus Area Office - Area Two	Counties Served	
3600 Schatulga Road Columbus, GA 31907 (706) 568-2165 Fax (706) 569-3071	Chattahoochee Harris Marion Muscogee	Stewart Talbot

Perry Area Office - Area Three	Counties Served	
200 Julianne Street Perry, GA 31069 (478) 988-7151 / (478) 988-7152 Fax (478) 988-7161	Dooly Houston Macon	Pulaski Schley Sumter

Macon Area Office - Area Four	Counties Served	
4499 Riverside Drive Macon, GA 31210 (478) 757-2601 / (478) 757-2602 Fax (478) 757-2598	Bibb Crawford Jones	Peach Monroe Twiggs

LaGrange Area Office – Area Five	Counties Served	
1107 Hogansville Road LaGrange, GA 30241 (706) 845-4115 / (706) 845-4116 Fax (706) 845-4310	Coweta Fayette Troup	Meriwether Heard

DISTRICT 4 AREA OFFICES

Valdosta Area Office - Area One	Counties Served
1411 Madison Highway Valdosta, GA 31601 229-333-5287	Berrien Brooks Cooks Echols Lanier Lowndes

Douglas Area Office - Area Two	Counties Served
1835 S. Peterson Avenue Douglas, GA 31535 912-389-4201	Atkinson Benn Hill Coffee Irwin Turner Wilcox

Cuthbert/ Donaldsonville Area Office - Area Three	Counties Served
734 W. Crawford Street Route 1, Box 14 Donaldsonville, GA 31745 229-524-5760	Baker Decatur Grady Early Miller Seminole

Moultrie Area Office - Area Four	Counties Served	
120 Veterans Highway North Moultrie, GA 31788 229-891-7130	Colquitt Mitchell Thomas	Tift Worth

Albany Area Office – Area Five	Counties Served	
2060 Newton Road Albany, GA 31701 229-430-4198	Calhoun Clay Crisp Dougherty	Lee Quitman Randolph Terrell

DISTRICT 5 AREA OFFICES

Baxley Area Office - Area One	Counties Served
740 Oakdale Circle Baxley, GA 31513 Telephone: 912-366-1090 Fax: 912-366-1091	Appling Jeff Davis Montgomery Tatnall Telfair Toombs Wheeler

Waycross Area Office - Area Two	Counties Served
104 North Nichols Street Waycross, GA 31501 Telephone: 912-285-6009 Fax 912-284-2981	Bacon Brantley Charlton Clinch Pierce Ware

Brunswick Area Office - Area Three	Counties Served
128 Public Safety Blvd. Brunswick, GA 31525 Telephone: 912-264-7247 Fax 912-264-7285	Camden Glynn Long McIntosh Wayne

Statesboro Area Office - Area Four	Counties Served
17213 U.S. Highway 301 North Statesboro, GA 30458 Telephone: 912-871-1103 Fax: 912-681-0278	Bulloch Candler Effingham Evans Screven

Savannah Area Office - Area Five	Counties Served
630 West Boundary Street Savannah, GA 31402 Telephone: 912-651-2144 Fax: 912-651-2748	Bryan Chatham Liberty

DISTRICT 6 AREA OFFICES

Cartersville Area Office - Area One	Counties Served
874 Peeples Valley Road, N.W. Cartersville, GA 30120 Telephone: 770-387-3680	Bartow Cherokee Gordon Pickens

Dalton Area Office – Area Two	Counties Served
1313 North Tibbs Road Dalton, GA 30720 Telephone: 706-272-2211	Murray Catoosa Gilmer Fannin Whitfield

Buchanan Area Office - Area Three	Counties Served
4323 US Hwy. 27 Buchanan, GA 30113 Telephone: 770-646-5522	Carroll Haralson Paulding Polk

Rome Area Office - Area Four	Counties Served
533 East 20th Street Rome, GA 30161 Telephone: 706-295-6025	Dade Chattooga Floyd Walker

DISTRICT 7 AREA OFFICES

Decatur Area Office - Area One	Counties Served
5025 New Peachtree Road Chamblee GA 30341 (770) 216-3891	DeKalb Rockdale Atlanta

Marietta Area Office - Area Two	Counties Served
1269 Kennestone Circle Marietta, GA 30066 Telephone: (770) 528-3238 Fax: (770) 528-5506	Cobb North Fulton

College Park Area Office - Area Three	Counties Served
4125 Roosevelt Highway College Park, GA 30349 Telephone: (404) 559-6699 Fax: (404) 559-4928	Clayton Douglas South Fulton

Appendix B. Permit Applications

INFORMATION SHEET

FOR COMMERCIAL DRIVEWAY:

TYPE OF BUSINESS _____
NUMBER AND TYPE OF DRIVEWAYS REQUESTED _____
IS APPLICANT THE CURRENT OWNER OF THE PROPERTY YES NO
IS APPLICANT THE DEVELOPER OF THE PROPERTY YES NO
IS APPLICANT THE LEASEE OF THE PROPERTY YES NO
IS APPLICANT TO PURCHASE PROPERTY AFTER PERMIT IS APPROVED YES NO

DEVELOPER:

_____
NAME PHONE NO.

_____
ADDRESS CITY STATE ZIP

FOR SPECIAL ENCROACHMENT

DESCRIPTION OF WORK REQUESTED _____

PERMIT APPLICANT _____

THE PROPERTY IS LOCATED ON THE (N, S, E, W) _____ SIDE OF THE HIGHWAY BEGINNING _____FEET _____ OF THE CENTER LINE OF _____ (NEAREST NAMED ROAD) FRONTING _____ (TOTAL PROPERTY FRONTAGE OWNED) FEET FURTHER _____.

IS THE PROPERTY BEING PURCHASED OR SUBDIVIDED FROM A LARGER TRACT ___YES __ NO
*********APPLICANT MUST PROVIDE OVERALL SITE PLAN OF ENTIRE PROPERTY**********

IS THE PROPERTY BEING REZONED YES NO
CURRENT ZONING _____

APPLICANT MUST PROVIDE COPY OF PROPERTY'S ZONING STIPULATIONS AND COUNTY OR CITY DEVELOPMENT REIVIEW COMMENTS

I have read and understand the requirements stated above. I have been provided with a DOT Plan Checklist for information required on plans submitted for permit review. I am the owner/applicant or agent authorized to represent the owner/applicant with respect to the permit review process.

_____ **DATE** _____
NAME AND SIGNATURE

Intentionally Left Blank

Appendix C. Residential Driveway Permit Request

District No._____
State Highway No._____
Milepost No._____
County:_____
Permit No.:

Department of Transportation

Residential Driveway Permit Request

I,_____, of _____
Name of Applicant P.O. Box and Address

_____request permission to construct a residential driveway on S.R. _ U.S. _____in the
Phone No.

City of _____in_____County. The driveway will be constructed on the
(If Applicable)

_____ Side of the highway at a point ____ft._____ of the centerline of _____St. (Rd.) and at
NSEW NSEW Nearest street or road

milepost_.

By signing this request I agree to construct or have constructed this driveway as described below. I also agree that I will be responsible for the maintenance of this driveway including pipe, surface course, and slopes.

Date _____ Signature _____

Above information is to be provided by the owner prior to issuance.

This drive to serve a single family dwelling only and may not be converted to any other use without approval of DOT.

Typical Plan & Profile for Drive

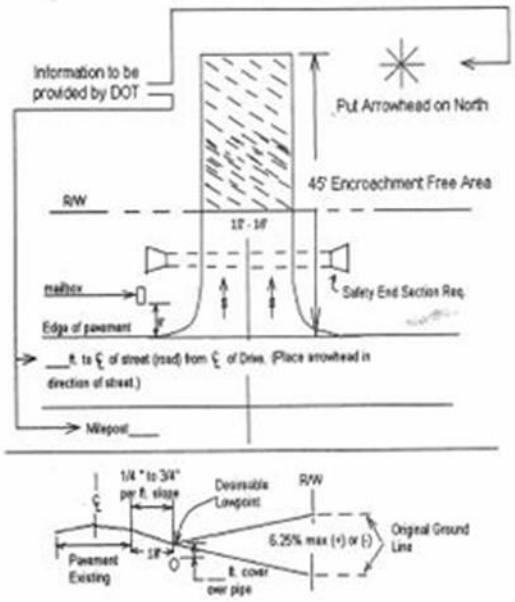

Other requirements:_____

_____

cc:

Special Requirements

1. Extend pipe as necessary to obtain a 4:1 or flatter slope.
2. The pipe shall be GA DOT standard _____ ft. long ___ Inches in diameter.
3. Existing surface flow to remain. Water cannot be diverted to DOT right-of-way.
4. No headwalls to be constructed on pipe. Safety End Sections required as a minimum.
5. No brick or other hazardous mailbox supports allowed on right–of-way. (mailbox shall be located on exit side) All driveways should have turn around pad off right-of-way to prevent backing into the highway.
6. All disturbed right-of-way to be regrassed to DOT specifications.
7. Driveway must be stabilized with 4" of stone as a minimum.
8. The orange permit poster must be displayed at the site in plain view until work is inspected and accepted by DOT.
9. All work to be completed in 90 days. Applicant to give area Engineer 24-hour notice before work begins.
10. Advance warning signs shall be required while working on DOT right-of-way.

Approved by:_____

Title: _____

This_____**day of**_____**, 20** _____

Intentionally Left Blank

Appendix D. Impact Study Certification

TRAFFIC IMPACT STUDY CERTIFICATION SHEET

_____ _____ _____

Name of Development State Route No. County

Certification By Traffic Engineer:

I hereby certify that this study conducted for the above named development, for which a preliminary site plan is included herewith, has been conducted in accordance with industry-accepted standards. I further certify that I have compared the access/egress configuration for the proposed development as shown on the preliminary site plan and the conditions conform to the Georgia DOT Regulations for Driveway and Encroachment Control, 2001 to the following extent.

Check the applicable Category.

The development as shown on the preliminary site plan:

_____COMPLIES

_____DOES NOT COMPLY

With the requirements of the GDOT Regulations for Driveway and Encroachment Control, Current Edition.

If the site plan does not comply, list the exceptions to the GDOT Driveway Regulations that must be allowed in order to approve the project.

_____
_____
_____
_____
_____
_____
_____
_____
_____
_____

Engineer's Stamp and Signature

Intentionally Left Blank

Appendix E. Permit Related Documents

DOT 7513A

REV. 07/1983
REV. 05/1998
REV. 06/2000

DEPARTMENT OF TRANSPORTATION
STATE OF GEORGIA

Bond # _____
(FOR BONDING COMPANY USE ONLY)

PERFORMANCE BOND

KNOW ALL MEN BY THESE PRESENTS:

That we, _____ (hereinafter called the Principal), as Principal and
(NAME OF PERMIT APPLICANT OR AGENT FOR APPLICANT)

the _____ , a _____ corporation having its principal office
(NAME OF SURETY COMPANY) (STATE WHERE SURETY WAS INCORPORATED)

and place of business at _____ and Local address
(HOME OFFICE ADDRESS)

at _____ and duly authorized to do business in
(STREET CITY STATE)

the State of Georgia (hereinafter called the Surety) as Surety are held firmly bound unto the Georgia Department of Transportation as Obligee,(hereinafter called the Owner) in the sum of _____ Dollars ($ _____)
(AMOUNT TO BE FURNISHED BY DOT)

for the payment whereof, Principal and Surety bind themselves, their heirs, executors, administrators, successors, and assigns, jointly and severally, firmly by these presents.

WHEREAS, the Permit Applicant has submitted application (s) to Owner for (a) certain written permit form (s) which form (s) (is) (are) hereby referred to and made a part hereof as fully and to the same extent as if copied at length herein. Said application form (s) (is) (are) dated _____ approximately. The purpose of this Bond is to guarantee that the Principal (as listed
(MONTH / YEAR)

above) will comply with all stipulations, requirements and specifications of said Permit (s) No. (s) _____ ,
(TO BE PROVIDED BY DOT PRIOR TO EXECUTION OF THIS BOND)

which permit (s) the Georgia Department of Transportation, is to approve and issue to _____
(NAME OF PERMIT APPLICANT ONLY)

upon receipt of this bond. The above permit (s) (is) (are) to authorize certain construction work as described therein within the

right-of-way of _____ in
(ST. HWY. #, ROAD NAME, PROJECT #, ETC.)

_____ County at _____ .
(COUNTY) (APPROX. LOCATION)

NOW, THEREFORE, THE CONDITION OF THE FOREGOING OBLIGATION IS SUCH, that if the Principal shall well and truly perform and fulfill all the undertakings, covenants, terms, conditions and agreements of said permit (s) and shall also well and truly perform and fulfill all the undertakings, covenants, terms, conditions and agreements of any and all duly authorized modifications of said permit (s) that may hereafter be made, then this obligation shall be void; otherwise, it shall remain in full force. Principal must obtain a Written Release from Owner before this bond may be voided or terminated or allowed to lapse.

If the Principal and/or Permit Applicant, if different does any work on Highway right-of-way prior to approval and issuance of the above described permit, this bond is hereby extended to cover any removal or corrective action determined necessary by the owner. If the permit is never issued and the Principal and/or Permit Applicant, if different encroaches onto State right-of-way the Principal and Surety are also obliged to take whatever action is deemed necessary by the owner to correct such unauthorized encroachment.

The Surety's aggregate liability hereunder shall in no event exceed the amount set forth above.

No claim, suit or action shall be brought hereunder after the expiration of two (2) years following the date upon which the Principal is released from this bond. If this limitation is made void by any law, controlling the construction hereof, such limitation shall be deemed to be amended to equal the minimum period of limitation permitted by such law.

No right of action shall accrue on this bond to or for the use of any person or corporation other than the Owner named herein or the heirs, executors, administrators or successors of Owner.

Signed, sealed and dated this _____ day of _____ 20 _____ .

WITNESS:

_____
(NAME OF PRINCIPAL)

_____
(SIGNATURE OF WITNESS)

_____
(ADDRESS OF PRINCIPAL)

_____

_____
(ADDRESS OF GEORGIA RESIDENT AGENT – *IF APPLICABLE*)

_____

By _____
(SIGNATURE OF PRINCIPAL)

By _____
(SIGNATURE OF GEORGIA RESIDENT AGENT – *IF APPLICABLE*)

_____
(TYPED NAME OF PRINCIPAL)

_____
(TYPED NAME OF GEORGIA RESIDENT AGENT – *IF APPLICABLE*)

No modifications or changes may be made to the text of this bond, unless agreed upon in writing by the Department.

_____
(NAME OF SURETY)

_____
(NAME OF ATTORNEY IN FACT) (TYPE OR PRINT) (AREA CODE) (PHONE #)

By _____
(ATTORNEY IN FACT SIGNATURE)

DOT 7422
Rev. 06/22/2000

"SAMPLE"

TO BE PREPARED ON BANK LETTERHEAD
(The Bank MUST have Offices and Assets within the State of Georgia)

TO: Department of Transportation
State of Georgia
Street Address
City, State Zip Code

Georgia Department of Transportation
Permit Number
State Route
Milepost
Date: **No Expiration Dates Allowed**

Gentlemen:

This is to advise that the **Name of Bank** at the request of **Name of Applicant**, has set aside an amount of $**"Numerical" Dollar Amount** in an escrow account as a cash bond for the Department of Transportation, State of Georgia. This amount of $**"Numerical" Dollar Amount** will be held in escrow until either request for payment to the Department of Transportation, State of Georgia is made or until the work under Permit Number **D.O.T. Permit Number** has been satisfactorily completed and the escrow account released by letter, from the Department of Transportation, State of Georgia, to the Applicant.

If any work is done on State Highway Right-of-Way prior to approval and issuance of the permit involved herein, this escrow account is hereby extended and may be used to cover any removal or corrective action determined necessary by the Department of Transportation, State of Georgia. If the permit is never issued and encroachment is made on State Highway Right-of-Way, these escrow funds may be used to make whatever corrections are deemed necessary by the Department of Transportation, State of Georgia.

Sincerely,

_____
Typed Name of Bank Officer
Title of Bank Officer

Conditions Accepted:

Name of Applicant

THIS INFO. "MUST" BE PROVIDED
IF DRAWN ON AN INSTITUTION OUTSIDE OF GEORGIA
1. Address of Georgia Bank
2. Phone Number of Georgia Bank
3. Name and Title of Georgia Bank Officer

by:_____
Typed Name
Title

INDEMNIFICATION AND HOLD HARMLESS AGREEMENT

(READ BEFORE SIGNING)

_____
DISTRICT NUMBER

_____	_____	_____	_____	_____
NAME OF APPLICANT	SR NUMBER	COUNTY	MILE POST	PERMIT NUMBER

The undersigned agrees to indemnify and hold harmless the Georgia Department of Transportation, the State of Georgia, its agencies and instrumentalities, and all of their respective officers, members, employees and directors (collectively referred to as the "DOT") from and against any and all claims, demands, liabilities, losses, cost or expensed, including attorney's fees, and from the payment of any sum or sums of money to any persons whomsoever (including third persons or subcontractors, employees or agents of the undersigned or of DOT), for any loss due to personal injury, bodily injury, death, or property damage arising out of, attributable to, or resulting from this permit or in any way attributable to the activities authorized by this permit; or due to any violation of this permit by the permit holder, or due to the application or violation of any pertinent Federal, State, or local law, rule or regulation in connection with this permit or authorized by this permit. If and to the extent such damage or loss covered by this indemnification is paid by any State self-insured funds (the "Funds") established and maintained by the State of Georgia Department of Administrative Services Risk Management Division (DOAS), the undersigned agrees to reimburse the Funds for such monies paid out by the Funds. The undersigned acknowledges the permits can be granted in situations where limited sight distance exists, and that the DOT makes no warranty, express or implied, concerning sight distance or other engineering considerations involved in granting this permit. The undersigned further acknowledges that the DOT has relied upon the representations made by the undersigned in applying for this permit, including the undersigned's representations that all conditions of the permit shall be met and that the undersigned shall meet all DOT specifications, as well as all relevant Federal, State and local laws, rules or regulation in the activities authorized by this permit. This indemnification shall apply where the DOT may be partially responsible for the situation giving rise to the claim.

_____	_____
SIGNATURE OF APPLICANT	DATE

Intentionally Left Blank

Appendix F. Waiver Form

DEPARTMENT OF TRANSPORTATION
STATE OF GEORGIA

INTERDEPARTMENT CORRESPONDENCE

FILE: Permit Name and Location

OFFICE: District
DATE

FROM: District Traffic Engineer/Manager

TO: District Engineer

SUBJECT: Request for Waiver of Regulations for Driveway and Encroachment Control Manual

___ **Wavier is Granted**
___ **Wavier is Denied**

Reason:

Comments
_____
_____
_____

_____
District Engineer/Designee

Cc: File

Intentionally Left Blank

Appendix G. Movie Production Documents

Indemnification, Hold Harmless and Release of All Claims Agreement for Motion Picture, Television, Commercial or Other Private Filming or Production on Rights of Way or Property Controlled or Managed by Georgia Department of Transportation

I, the undersigned (RELEASOR), do hereby request to film the movie _____on property within the Right of Way (RW) of SR_____, between_____, in _____County; said roadways and/or ancillary properties being managed and controlled by the Georgia Department of Transportation (Georgia DOT). The RELEASOR hereby extinguishes its rights and claims against the Georgia DOT;

I understand Georgia DOT owns and controls the property within the affected RW and is responsible for its operating condition, maintenance, safety and general upkeep;

In exchange for allowing RELEASOR to film a movie, RELEASOR herby agrees to:

1. Release Georgia DOT from all losses or claims for injuries, and damages to the RELEASOR whether known, unknown, foreseen, unforeseen, patent or latent that RELEASOR may have against Georgia DOT. RELEASOR understands and acknowledges the significance and consequences of such specific intent to release all claims and hereby assume full responsibility for any injuries, damages or losses that may occur;
2. Acknowledge that Georgia DOT reserves all rights of property ownership for public rights' of way to be accessed by RELEASOR for filming or production purposes; any entry upon said properties by the RELEASOR shall be approved in advance by Georgia DOT;
3. Provide Georgia DOT with proof of appropriate insurance and or bonding coverage as deemed appropriate solely by Georgia DOT;
4. Provide a detailed detour plan to Georgia DOT for review and approval at least one month prior to related closure of any lanes, highways, bridges or other facilities in the control of Georgia DOT;
5. Notify all area police, fire, medical and other emergency response agencies and jurisdictional local governments of said detour plans at least one week prior to facility closures;
6. Provide for any and all such related traffic control management measures as may be requested by Georgia DOT prior to and during said filming or production activities; said measures to be provided at no expense to Georgia DOT and by a firm specializing in such matters and previously approved by Georgia DOT;
7. Provide continuous road or bridge access to any and all residents and businesses affected by the facility closures, unless otherwise permitted by written consent;
8. Restore any roadway or property owned or managed by Georgia DOT that is used for filming or production purposes to a minimum of its pre-filming/production original condition, as determined solely by Georgia DOT, with all such restoration and refurbishment performed by a firm specializing in such matters and previously approved by Georgia DOT with related costs to be born solely by the RELEASOR and at no cost to Georgia DOT;

Indemnification, Hold Harmless and Release of All Claims Agreement for Motion Picture, Television, Commercial or Other Private Filming or Production on Rights of Way or Property Controlled or Managed by Georgia Department of Transportation

9. Indemnify and hold harmless Georgia DOT and its employees or agents for and against any and all claims, damages, losses and expense, including but not limited to attorney fees, arising out of or resulting from the aforesaid filming/production activities, provided that such claim, damage, loss or expense is attributable to bodily injury, sickness, disease, or death, or to injury to or destruction of tangible property including loss of use resulting thereof, but only to the extent caused in whole or part by any act or omission of RELEASOR regardless of whether or not such claim, damage, loss or expense is caused in part by a party indemnified hereunder.
10. Such obligation shall not be construed to negate, abridge, or reduce other rights or obligations of indemnity, which would otherwise exist as to a party or person described in this waiver;
11. RELEASOR has freely and voluntarily executed this release, and in so doing does not rely on inducements, promises or representations made by Georgia DOT or any of its representatives.
12. This release shall be valid continuously, from the ____ day of _____, 20___, until the ____ day of _____, 20__.

I UNDERSTAND THIS IS A LEGALLY BINDING RELEASE; I HAVE READ IT FULLY AND UNDERSTAND ITS TERMS. I EXECUTE IT VOLUNTARILY WITH FULL KNOWLEDGE OF ITS MEANING AND SIGNIFICANCE.

NAME:

_____

First Last

ADDRESS:

_____

Street City State Zip Code Phone

SIGNATURE: _____ DATE: _____

ADDENDUM TO THE INDEMNIFICATION, HOLD HARMLESS, AND RELEASE OF ALL CLAIMS AGREEMENT FOR MOTION PICTURE, TELEVISION, COMMERCIAL OR OTHER PRIVATE FILMING OR PRODUCTION ON RIGHTS OF WAY OR PROPERTY CONTROLLED OR MANAGED BY THE GEORGIA DEPARTMENT OF TRANSPORTATION

Reference is hereby made to the Indemnification, Hold Harmless, And Release Of All Claims Agreement (the "Underlying Agreement") dated as of _____, 20___, by and between the Georgia Department of Transportation ("Grantor") and _____ ("Production Company"), with respect to the property within the Right of Way of S.R. _____@_____ in _____ County (the "Property") and its use in connection with the motion picture currently entitled "_____" (the "Picture"). This addendum ("Addendum") is hereby understood to be part of the Underlying Agreement, and Production Company's agreement to the terms of the Underlying Agreement is fully conditioned upon Grantor's agreement to the terms of this Addendum. In the event of any conflict between this Addendum and the Underlying Agreement, the applicable terms and/or conditions contained in this Addendum control.

1. Grantor hereby irrevocably agrees to permit Production Company to use the Property for (a) rehearsing, photographing, filming and recording scenes and sounds and other pre-production and production activities for the Picture and (b) parking and storage of equipment, trucks and other vehicles and other items for use in connection with the Picture. This use of the Property is limited to the time, physical area and use restrictions set out in the Permit issued by the Grantor to the Grantee. Production Company and its licensees, sponsors, assigns and successors may produce, distribute, exhibit, advertise, promote and otherwise exploit the Picture or any portion thereof, whether or not such uses contain audio and/or visual reproductions of the Property and whether or not the Property is identified, in any and all media which currently exist or which may exist in the future in all countries of the world and in perpetuity. Grantor shall not have the right to bring any individual on set or to photograph or videotape any sets, individuals or activities on set, without Production Company's prior written consent in each instance. The copyright in any pictures taken or interviews given shall be solely owned by Production Company.

2. As limited by the Permit, Production Company may place, erect and maintain any and all necessary facilities and equipment, including temporary sets, on the Property and agrees to remove same after the completion of Production Company's work and leave the Property in as good condition as when received, reasonable wear and tear from uses permitted herein excepted.

3. Production Company agrees to indemnify and hold harmless Grantor from and against any and all liabilities, damages and claims of third parties arising from Production Company's use hereunder of the Property, including reasonable attorney fees (unless such fees, liabilities, damages or claims arise from a breach of any of Grantor's representations and warranties as set forth below) and from any physical damage to the Property caused by Production Company, or by any of its representatives, employees, or agents resulting from occupying the Property.

4. Grantor represents and warrants that it has the right and authority to enter into and deliver the Underlying Agreement and this Addendum and to grant the rights granted by it herein (including the uses of the Property intended by Production Company) and otherwise perform the obligations

herein. The undersigned represents that he/she is empowered to execute this Addendum for Grantor, and hereby warrants and represents that the right to use and occupy the Property is under the exclusive control of Grantor, and Grantor has full right and authority to enter into the Underlying Agreement and this Addendum and to grant the rights herein granted to use the Property for the purposes set forth above. Grantor releases and discharges Production Company, its parent, affiliates, distributors, licensees, successors, assignees, and the officers, directors, members, employees and agents of all of the foregoing, from any and all claims, demands or causes of actions that Grantor may now have or may from now on have for libel, defamation, invasion of privacy or right of publicity, infringement of copyright or violation of any other right arising out of or relating to any utilization of the rights granted herein.

5. All rights of every kind in and to all still pictures, motion pictures, videotapes, photographs and sound recordings made hereunder shall be and remain vested in Production Company and its successors, assigns and licensees in any and all media and manner now known or hereafter devised throughout the universe in perpetuity, and neither Grantor nor any tenant, or other party now or hereafter having an interest in said Property, shall have any right of action against Production Company or any other party arising out of any use of said still pictures, motion pictures, videotapes, photographs and/or sound recordings, whether or not such use is, or may be claimed to be, defamatory, untrue or censorable in nature.

6. *To the extent allowed by law, in no event shall Grantor* or its successors and assigns, or any other party now or hereafter having an interest in said Property seek or be *entitled to enjoin or restrain the production, distribution, advertising or exploitation of the Picture, or any parts or elements thereof.*

7. Upon notice to the Grantor, production Company shall have the right to assign the Underlying Agreement and Addendum and all or any part of Production Company's rights hereunder to any person, firm or corporation, and in such event, Production Company shall be released from all of its further obligations to Grantor hereunder. The Underlying Agreement and this Addendum shall be binding upon and inure to the benefit of Production Company's successors, licensees and assigns, and may in turn be freely licensed or assigned by any such assignee, licensee, transferee or delegate. The Underlying Agreement and this Addendum and Grantor's rights and obligations hereunder may not be assigned by Grantor.

8. Unless otherwise provided hereunder, all notices shall be in writing and shall be sent to the addresses set forth above in the preamble (subject to changes of which the parties are notified in writing). Notices shall be given by personal delivery, overnight courier, facsimile or by registered or certified mail (postage prepaid), and shall be deemed given on the date delivered or faxed, one (1) business day after a notice is sent by overnight courier, or three (3) business days after the date mailed. The time to respond to notices given during the week in between Christmas Eve and New Year's Day shall be tolled until five (5) business days following New Year's Day.

9. The Underlying Agreement and this Addendum shall be construed, interpreted, and enforced in accord with the laws of the State of Georgia applicable to agreements executed and to be wholly performed therein.

IN WITNESS WHEREOF, the parties have hereunto set their names and signatures as of the date first above written.

"GRANTOR":

GEORGIA DEPARTMENT OF TRANSPORTATION

By:_____

Name:_____

Its:_____

Tax ID:_____

"PRODUCTION COMPANY":

PRODUCTION COMPANY NAME

By:_____

Name:_____

Its:_____

EXHIBIT 1

DISTIRCT CONTACTS

DISTRICT	CONTACT	EMAIL	PHONE NUMBER
1.	Shane Giles	shgiles@dot.ga.gov	770/533-8491
	Katie Strickland	kstrickland@dot.ga.gov	770/533-7250
2.	Kedrick Collins	kecollins@dot.ga.gov	478/552-4619
	Wyatt Johnson	wjohnson@dot.ga.gov	478/552-4681
	Cissy McNure	gmcnure@dot.ga.gov	478/552-4656
3.	Kimberly Larson	klarson@dot.ga.gov	706/646-7532
	Chance Baxley	cbaxley@dot.ga.gov	706/646-7598
4.	Randy Rathburn	rrathburn@dot.ga.gov	229/386-3435
	Scott Purvis	spurvis@dot.ga.gov	
5.	Cynthia Phillips	cphillips@dot.ga.gov	912/427-5703
	Jim Nagel	jnagel@dot.ga.gov	912/427-5734
6.	Ricky Clayton	rclayton@dot.ga.gov	678/721-5291
	Mohamed Arfa	marafa@dot.ga.gov	678/721-5284
7.	Paul DeNard	pdenard@dot.ga.gov	770/216-3948
	Edlin Regis	eregis@dot.ga.gov	770/216-3948
	Chris Woods	cwoods@dot.ga.gov	770/216-3948