Revised August 11, 2011
Revised September 7, 2012
First Use: January 18, 2013

DEPARTMENT OF TRANSPORTATION
STATE OF GEORGIA

SPECIAL PROVISION

Section 925—Traffic Signal Equipment

Delete Section 925 and substitute the following:

925.1 General Description

This section provides Specifications for a variety of traffic signal equipment. Ramp Meters are defined as a form of traffic signalization and all general provisions for traffic signalization are applicable unless otherwise noted in the Plans and Specifications.

925.1.01 Related References

A. Standard Specifications

Section 500—Concrete Structures

Section 639—Strain Poles for Overhead Sign and Signal Assemblies

Section 647—Traffic Signal Installation

Section 682—Electrical Wire, Cable and Conduit

Section 833—Joint Fillers and Sealers

Section 861—Piling and Round Timber

Section 870—Paints (Field Painting)

Section 915—Mast Arm Assemblies

Section 922—Electrical Wire and Cable

Section 923—Electrical Conduit

Section 926—Wireless Communication Equipment

Section 935—Fiber Optic System

Section 937 – Video Detection System

Section 939—Communications and Electronic Equipment

B. Referenced Documents

- National Electrical Manufacturers Association (NEMA) Standards Publication TS 1 Section 15
- NEMA Standard Publication TS 2- 1998
- Institute of Transportation Engineers (ITE)Vehicle Traffic Control Signal Heads Specification
- ITE Vehicle Traffic Control Signal Heads: Light Emitting Diode (LED)Circular Signal Supplement June 27, 2005 Specification
- ITE Vehicle Traffic Control Signal Heads – Part 3: Light Emitting Diode (LED) Vehicle Arrow Traffic Signal Modules Specification

- ITE Pedestrian Traffic Control Signal indications – Part 2: Light Emitting Diode (LED) Pedestrian Traffic Signal Modules Specification
- International Municipal Signal Association (IMSA) #20-1 Specification
- IMSA #20-4Specification
- IMSA #20-6Specification
- IMSA #50-2Specification
- IMSA #51-1Specification
- Underwriters Laboratory Inc. (UL) 94 Tests for Flammability of Plastic Materials for Parts in Devices and Appliances
- UL 493 Standard for Safety for Thermoplastic-Insulated Underground Feeder and Branch-Circuit Cables
- Traffic Signal Control Equipment Specifications, January 1989 edition and applicable addenda, State of California Business, Transportation & Housing Agency
- State of California Department of Transportation (CALTRANS) Qualified Products List (QPL) Controller Assemblies for the Model 170/2070 Traffic Controller,
- CALTRANS Transportation Electrical Equipment Specifications (TEES) August 16, 2002 and applicable addenda
- Georgia Department of Transportation Qualified Products List 75"Polyurethane Sealant for Inductive Loops"(American Society of Testing and Materials(ASTM) A36 Standard Specification for Carbon Structural Steel
- ASTM A53 Standard Specification for Pipe, Steel, Black and Hot Dipped, Zinc-Coated, Welded and Seamless
- ASTM A123 Standard Specification for Zinc (Hot-Dip Galvanized) Coating on Iron and Steel Products
- ASTM A153 Standard Specification for Zinc Coating (Hot Dip) on Iron and Steel Hardware
- ASTM A325 Standard Specification for Structural Bolts, Steel, Heat Treated, 120/105 ksi Minimum Tensile Strength
- ASTM A475 Standard Specification for Zinc-Coated Steel Wire Strand
- ASTM A572 Standard Specification for High- Strength Low-Alloy Columbium-Vanadium Structural Steel
- ASTM C1028 Standard Test Method for Determining the Static Coefficient of Friction of Ceramic Tile and Other Like Surfaces by the Horizontal Dynamometer Pull-Meter Method
- ASTM D256 Standard Test Methods for Determining the Izod Pendulum Impact Resistance of Plastics
- ASTM D638 Standard Test Methods for Tensile Properties of Plastics
- ASTM D785 Standard Test Method for Rockwell Hardness of Plastics: Electrical Insulating Materials
- ASTM D790 Standard Test Methods for Flexural Properties of Unreinforced and Reinforced Plastics and Electrical Insulating Materials
- ASTM D2444 Standard Test Methods for Determination of the Impact Resistance of Thermoplastic Pipe and Fittings by Means of a Tup
- ASTM D543 Standard Practices for Evaluating the Resistance of Plastics to Chemical Reagants
- Electronic Industries Standards (EIA)

925.2 Materials

925.2.01 General

A. Requirements

Ensure that the traffic signal equipment and materials meet the Plans and Specifications.

All equipment furnished shall be new and meet the requirements of the following:

- Underwriter's Laboratory Incorporated (UL)
- Electronic Industries Association (EIA)
- National Electric Code (NEC)
- American Society of Testing and Materials (ASTM)

- American National Standards Institute (ANSI)
- International Municipal Signal Association (IMSA)
- National Electrical Manufacturers Association (NEMA)
- Applicable Standards, Specifications, and Regulations of the:

  Georgia Department of Transportation
  Traffic Signal Electrical Facility & NaviGAtor Support (TSEF)
  935 E. Confederate Avenue, Building 5
  Atlanta, GA 30316

B. Fabrication

General Provisions 101 through 150.

C. Acceptance

General Provisions 101 through 150.

D. Materials Warranty

- Provide to the District Signal Engineer or maintaining agency all manufacturers' warranties and guarantees for all signal equipment items listed in this document as well as any signal equipment listed in the Plans, except for state supplied equipment.
- Ensure that warranties and guarantees are consistent with those provided as customary trade practices; or as otherwise specified in the Plans, Standard Specifications, Supplemental Specifications or Special Provisions.
- Ensure, and state, that manufacturer's and supplier's warranties and guarantees are transferable to the agency or user that is responsible for traffic signal maintenance. And said warranties and guarantees are continuous throughout their duration.
- Ensure equipment provided under this specification shall be warranted by the manufacturer to be free from defects in materials and workmanship for a minimum period of two years from date of receipt or one year from date of acceptance of installation. The exception is the other materials stated in this specification which have longer warranty durations.
- Ensure the manufacturer will repair any faulty equipment during this period at no charge to the Department for parts, labor or shipping to and from the factory.

925.2.02 Type 2070 Controller Assemblies

A. Requirements

For 2070 controller cabinet assemblies, use 2070 controller units that meet the requirements of the following or are previously approved by TSEF:

- *Traffic Electrical Equipment Specifications (TEES)* published by the State of California Business, Transportation, and Housing Agency; Department of Transportation, current edition and current addenda
- *CALTRANS* Qualified Products List (QPL)
- Ensure the unit supplied is compatible with current GDOT licensed firmware.

The following Specifications augment the CALTRANS Specifications and take precedence over conflicting CALTRANS Specifications.

1. Input/output (I/O) and Configuration:

   The 2070 Controller shall be supplied in one of the following configurations, as specified in the Plans (all modules are specified in TEES, but these configurations supersede the defined configurations in TEES):

   - 2070L: Provide Chassis, 2070-1B Single-Board CPU, 2070-2A Field I/O Module, 2070-3B Front Panel (8x40 display), 2070-4B 3.5-amp Power Supply, and a 2070-7A Module. This unit is intended for interfacing in Type 170E or ITS cabinets and shall provide the default input and output configuration as shown in Tables 925-13, 925-15 and 925-16 for ITS cabinets using a traffic signal application.

- 2070E: Provide Chassis, 2070-1E Single-Board CPU, 2070-2A Field I/O Module, 2070-3B Front Panel (8x40 display), 2070-4B 3.5-amp Power Supply, and a 2070-7A Module. This unit is intended for interfacing in Type 170E or ITS cabinets and shall provide the default input and output configuration as shown in Tables 925-13, 925-15 and 925-16 for ITS cabinets using a traffic signal application.
- 2070LC: Provide Chassis, 2070-1B Single-Board CPU, 2070-2B Field I/O Module, 2070-3B Front Panel (8x40 display), 2070-4B 3.5-amp Power Supply, and a 2070-7A Module. This unit is intended for interfacing in ITS cabinets only and shall provide the default input and output configuration as shown in Tables 925 -13, 925-15 and 925-16 for ITS cabinets using a traffic signal application.
- 2070 LB: Provide Chassis, 2070-1B Single –Board CPU, 2070-2A Field I/O Module, 2070-3C Front Panel, 2070-4B 3.5-amp Power Supply, This unit is intended for interfacing in Type 170E or ITS cabinets where a user interface is not required and shall provide the default input and output configuration as shown in Tables 925 -13, 925-15 and 925-16 for ITS cabinets using a traffic signal application.
- 2070 LN1: Provide Chassis, 2070-1B Single-Board CPU, 2070-2B Field I/O Module, 2070-3B Front Panel (8x40 display), 2070-4NB 3.5-amp Power Supply, 2070-8 NEMA Interface Module, and a 2070-7A Module. This unit is intended for interfacing in NEMA TS 1 or NEMA TS 2 Type 2 cabinets.
- 2070 LN2: Provide Chassis, 2070-1B Single-Board CPU, 2070-2N Field I/O Module, 2070-3B Front Panel (8x40 display), 2070-4NB 3.5-amp Power Supply, and a 2070-7A Module. This unit is intended for interfacing in a NEMA TS 2 Type 1 cabinet.

2. Power Supply Modules:

   Either the 2070-4A, 2070-4B, 2070-4NA or 2070-4NB module shall be provided as required in the configuration requirements in the preceding Item. In addition to all requirements of the TEES, the power supplies shall be clearly marked as a “2070-4A”, “2070-4B”,”2070-4NA”, or “2070-4NB”. The Vendor may supply a 2070-4A or 4NA power supply module in lieu of a 2070-4B or 4NB, as long as it is so marked and adds no additional cost to GDOT.

3. Documentation:

   Include with each controller, manuals that document the programming, operation, and maintenance of the unit. Include schematic drawings and pin assignment charts in the manuals for maintenance. Documentation shall include all components, including communications modules. Specific reference is made to section 1.2.4 Documentation in the CALTRANS TEES concerning required documentation to be provided.

4. Testing:

   Provide for complete testing of unit before it is shipped. If unit is shipped with applications firmware installed, it must be tested with the application (e.g. Traffic Signal Control). If a random sample of greater than 10 percent of the units tested is rejected then the total shipment shall be rejected and vendor will be responsible for all costs to test and repair all units provided.

B. Fabrication

General Provisions 101 through 150.

C. Acceptance

See Subsection 925.2.02 for compliance with CALTRANS QPL. Also see item 4 Testing in Section A above.

D. Materials Warranty:

(See Subsection 925.2.01 D for Materials Warranties).

925.2.03 Type 2070 Controller Subassemblies

A. Requirements

For 2070 controller subassemblies, use 2070 controller subassembly units that meet the requirements of the following or are previously approved by TSEF:

- *Traffic Electrical Equipment Specifications (TEES)* published by the State of California Business, Transportation, and Housing Agency; Department of Transportation, current edition and current addenda
- *CALTRANS* Qualified Products List (QPL)

The following Specifications augment the CALTRANS Specifications and take precedence over conflicting CALTRANS Specifications.

1. 2070 1B Module:

   The 2070 1B module may be supplied as a separate item to be used in all versions of the 2070 controller. The 2070 1B module shall be supplied complete with the operating software. Ensure it contains the required files to be compatible with the current GDOT applications software.

2. 2070 1E Module:

   The 27070 1E module may be supplied as a separate item to be used in all versions of the 2070 controller. The 2070 1E module shall be supplied complete with operating software. Ensure it contains the required files to be compatible with the current GDOT applications software.

3. 2070 2A Field I/O Module

   The 2070 2A Field I/O module may be supplied as a separate item. The 2070 2A Field I/O module shall consist of the Field Controller Unit; Parallel Input/Output Ports; other Module Circuit Functions (includes muzzle jumper); Serial Communication Circuitry; Module Connectors C1S, C11S and C12S mounted on the module front plate; VDC Power Supply (+12VDC to + 5VDC) and required software. Ensure it contains any configuration jumpers to be compatible with current GDOT Applications software. Ensure the 2070 2A field I/O Module functions with a Model 2070L or 2070LB Controller Assembly and is compatible with current GDOT applications software.

4. 2070 2B Field I/O Module:

   The 2070 2B Field I/O module may be supplied as a separate item and consist of the Serial Communication Circuitry, DC power Supply, and Module Connector 12S mounted on the module front plate only. Ensure it contains any configuration jumpers to be compatible with current GDOT Applications software. Ensure the 2070 2B field I/O Module functions with a Model 2070 LC or 2070LN1 Controller Assembly and is compatible with current GDOT applications software.

5. 2070 2N Field I/O Module:

   The 2070 2N Field I/O module may be supplied as a separate item and provides a NEMA TS2-1compatible SDLC interface via Serial Port 3. AC power to the 2070 Unit and Fault Monitor Logic Output via 2070 Serial Port 5 and Output Frame Byte 9 Bit 6 to the NEMA TS2 Cabinet Monitor Unit (CMU). Ensure it contains any configuration jumpers to be compatible with current GDOT Applications software. Ensure the 2070 2N field I/O Module functions with a Model 2070 LN2 Controller Assembly and is compatible with current GDOT applications software.

6. 2070 3B Front Panel Display Module:

   The 2070 3B Display Module may be supplied as a separate item and provides a Front Panel Assembly controller, two keyboards, AUX switch alarm bell and an 8 line by 40 character display. This assembly shall also include a panel with latch assembly and two TSD #1 hinge attaching devices, assembly PCB, external serial port connectors, CPU active LED indicator, contrast adjustment knob, and Front Panel Harness. Ensure it contains any configuration jumpers to be compatible with current GDOT Applications software. Ensure the 2070 3B Front Panel Assembly Module functions with Models 2070L, 2070LC, 2070LN1 and 2070 LN2 Controller Assemblies and is compatible with current GDOT applications software. Ensure the hardware hinge attaching devices mate with existing 2070 assemblies. Ensure the Front Panel Harness is connected to the front panel via a removable connector. Ensure the front panel connector supports the aux switch.

7. 2070 3C Front Panel Display Module:

   The 2070 3C Display Module may be supplied as a separate item and provides a System Serial Port 6Lines, Isolated and vectored to Connector C60S. This assembly shall also include a panel with latch assembly and two TSD #1 hinge attaching devices, assembly PCB, external serial port connectors, CPU active LED indicator, and Front Panel Harness. Ensure it contains any configuration jumpers to be compatible with current GDOT Applications software. Ensure the 2070 3B Front Panel Assembly Module functions with Model 2070LB Controller Assembly and is compatible with current GDOT applications software. Ensure the hardware hinge attaching devices mate with existing 2070 assemblies. Ensure the Front Panel Harness is connected to the front panel via a removable connector. Ensure the front panel connector supports the aux switch.

8. 2070 4B Power Supply Module:

   The 2070 4B Power Supply Module may be supplied as a separate item and is an independent, self contained module. Ensure that it is vented and cooled by convection only. Provide module that slides into power supply compartment from the back of the chassis and is attached to the Backplane mounting surface by its four TSD #3 Devices. Ensure the module supplies at least 3.5 amperes of +5VDC. Ensure the 2070 4B Power Supply Module is compatible with Models 2070L, 2070LB, and 2070LC Controller Assemblies and is compatible with current GDOT applications software. Ensure the connection harness PS 2 on existing units can be mated with the 4B module supplied. A 2070 4A Power Supply Module may be provided in place of a 4B module as long as it is labeled as such and there is no additional cost to GDOT. Ensure the module supplied is appropriately marked as a 4B or 4A module.

9. 2070 4NB Power Supply Module:

   The 2070 4NB Power Supply Module may be supplied as a separate item and is an independent self contained module. Ensure that it is vented and cooled by convection only. Provide module that slides into power supply compartment from the back of the chassis and is attached to the Backplane mounting surface by its four TSD #3 Devices. Ensure the module supplies at least 3.5 amperes of +5VDC. Ensure the 2070 4B Power Supply Module is compatible with Models 2070 LN1 and 2070 LN2 Controller Assemblies and is compatible with current GDOT applications software. Ensure the connection harness PS 2 on existing units can be mated with the 4B module supplied. Ensure the 4NB power supply module supports the NEMA TS1 and TS2 Standards. A 2070 4A Power Supply Module may be provided in place of a 4B module as long as it is labeled as such and there is no additional cost to GDOT. Ensure the module supplied is appropriately marked as a 4NA or 4NB module.

10. 2070 6B Communications Module:

    The 2070 6B Communications Module is supplied as a separate item. The 6B communications module is a dual async/modem serial module. Ensure the module supports both Serial and modem FSK communications on both of two separate ports. Ensure the Modem data baud rate supports 0 to 9600. Ensure the module is configured to support FSK communications on the C2S connection. Ensure it contains any configuration jumpers to be compatible with current GDOT Applications software.

11. 2070 7A Communications Module:

    The 2070 7A Communications Module may be supplied as a separate item. The 7A communications module is a dual async serial communications module. Ensure the module supports serial communications on both ports. Ensure it contains any configuration jumpers to be compatible with current GDOT Applications software.

12. 2070 8 Field I/O Module:

    The 2070 8 Field I/O Module may be supplied as a separate item. The 8 Field I/O Module consists of the module chassis, module power supply, Field Control Unit Controller, parallel input/output ports, serial communications circuits and module connectors. Ensure the EX1 connector is provided with appropriate mating connections to interface with either 6B or 7A communications modules. Ensure the 2070 8 Field I/O module is provided with the appropriate mating connector to mate with the C12S connector on the 2070 2B Field I/O module. Ensure the 2070 8 Field I/O module functions as part of a Model 2070 LN1 controller.

13. 2070 D Panel:

    The 2070 D panel is supplied as a separate item. The 2070 D panel supports the inputs and outputs of the “D” connector provided on a 2070-8 module which is also part of a Model 2070 LN1. Ensure the “D” Connector panel supports all 61 pins with a connecting MS “D” connector and terminal blocks. Ensure the 2070 D Panel provides adequate cable length to allow attachment in an existing NEMA Cabinet. Ensure that the terminal blocks allow for two connections.

B. Fabrication

General Provisions 101 through 150.

C. Acceptance

(See Subsection 925.2.02 for compliance with CALTRANS QPL).

D. Materials Warranty:

(See Subsection 925.2.01.D for Materials Warranties).

925.2.04 Cabinet Assemblies

A. Requirements

In addition to the CALTRANS Specifications, ensure that the cabinet assembly conforms to the requirements listed below, which take precedence over conflicting CALTRANS Specifications.

1. Cabinet configuration:

   Supply cabinets in accordance with these Specifications. Equip the cabinets with auxiliary equipment as follows:

   a. Model 332A Cabinet:

      Lower input field termination panel

      1 – Model 242 DC Isolator in Slot 14 of Upper Input File

      4 – Flash Transfer Relays

      2 – Model 204 Flashers

      1- Auxiliary Cabinet Shelf to support Communication Devices

      1- 4 Position Power Strip

      1- Manual push button assembly

   b. Model 336S Cabinet:

      1-Model 242 DC Isolator in Slot 14 of Input File

      4- Flash Transfer Relays

      2-Model 204 Flashers

      1- Auxiliary Cabinet Shelf to support Communication Devices

      1- 4 Position Power Strip

      1- Manual push button assembly

      1-"M" Base Adapter installed (Base Mount Cabinets Only)

      1-Aluminum Cover Plate for Cabinet Bottom (Pole Mount Cabinets Only)

   c. Model 337 Cabinet

      3-Flash Transfer Relays

      1-Model 204 Flasher

      1- Manual push button assembly

   d. Model 334 Cabinet with Auxiliary Output File for Ramp Metering Operations

      1- Auxiliary Equipment Shelf

      1- Output/PDA Type 3 with Model 206 24 Volt DC Power Supply with flash transfer relay

      1- Model 208 Monitor Unit

      1-Load Switch Model 200

      1- 4 Position Power Strip

      1- Lower Input Field Termination Panel

      1- Detector Test Switch Panel

   NOTE: Include above components in cabinet at time of delivery.

Other auxiliary cabinet components such as controllers, monitors, load switches, etc. will be ordered as separate items.

2. Finish

   Use cabinets that have a bare aluminum finish (see Subsection 925.2.07.A.1 for controller-cabinet minimum fabrication Specifications).

3. Locks

   Equip the main cabinet door with locks that accept No. 2 Corbin keys. Provide two sets of keys with each cabinet. One set of keys is defined as one – No. 2 key and one - police panel key.

4. Power

Equip the cabinet assemblies with a power distribution assembly to generate AC and DC power for the electronic components, except the DC power for the controller units. Provide the Model 332 and 336S cabinets with a DC isolator for stop time/flash sense, located in slot 14 of the input file.

5. Mounting

   Equip the cabinets for pole or base mounting, as specified in the Plans.

   a. Base Mount

      Supply Model 336S cabinets, when specified as base mount, with an “M” base-mounting adapter installed.

   b. Pole Mount

      Supply Model 336S or 337 cabinets, when specified as pole mount, with two exterior pole mounting brackets that allow for mounting on steel, concrete, and timber poles.

      Ensure that the bracket mounting holes are properly reinforced with metal plates of adequate size and strength, welded longitudinally across the inside depth of the cabinet.

      Ensure that the exterior-mounting bracket is shipped installed on the cabinet housing. Additionally, provide an aluminum plate, which covers the bottom cabinet opening.

6. Unused Phase Monitoring

   Provide odd-phase reds with ballast resistor (2K, 10 watt) dummy loads. Do not wire the cabinet to monitor pedestrian yellow indications. When auxiliary output file is used provide resistors for overlaps.

   Neatly lace, label and bundle the wiring from the signal monitor for pedestrian yellow monitoring on the back panel.

7. Red Monitoring

   Provide a connector and terminal assembly designated as P20 for monitoring the absence of red as an integral part of the output file. Terminate the connector and ensure compatible with the cable and C connector of a Type 2010 conflict monitor unit capable of monitoring the absence of red.

   Provide the pin assignments of the P20 connector and terminal assemble with the cabinet Plans.

   Ensure that the P20 connector is physically alike to the cable and connector of a Type 2010 conflict monitor unit to prevent the absence of red cable connector from being inserted into the P20 connector 180 degrees out of alignment.

   Submit details for programming of the unused red channels for approval.

8. Cabinet Light

   Include in each cabinet one fluorescent strip lighting fixture mounted inside the top front portion of the cabinet. Do not use screw in type fluorescent lamp.

   The fixture includes a cool white lamp, covered, and operated by a normal power factor, UL listed ballast.

   Install a door-actuated switch to turn on the cabinet light when either door is opened.

   Cabinet fan and light shall be fed from 15 amp equipment breaker.

9. Cabinet Interlock

   Do not install the interlock circuit, as detailed in the CALTRANS Specifications.

10. Cabinet Drawer

    Equip each Model 334, 332A, and 336S cabinet with an aluminum storage compartment mounted in the rack assembly with the approximate following dimensions: 16 inches (400 mm) wide, 14 inches (350 mm) long, and 1.75 inches (44 mm) deep.

    Mount this compartment directly under the Type 2070 controller. Provide a drawer with telescoping drawer guides to allow full extension from the rack assembly.

    When extended, the storage compartment opens to provide storage space for cabinet documentation and other miscellaneous items.

    Ensure that the storage compartment be of adequate construction to support a weight of 25 pounds (12 kg) when extended.

    Provide a top for the storage compartment that has a non-slip plastic laminate attached, which covers a minimum of 90% of the surface area of the top.

11. Auxiliary Equipment Shelf

    Provide a “shelf” in each cabinet that provides a location to mount Fiber modem, dialup modem and/or Field hardened switch. Provide shelf in location that allows easy access to AC power outlets and communications links

(telephone, interconnect). Locate shelf so as not block access to other equipment or modules including Battery Backup System.

12. Power Strip

    Equip each cabinet with a metal power strip (minimum of 4 outlets) to support AC power for external communications devices in cabinet. Provide metal strip that is mounted vertically on the rear rail. Ensure that the power strip may be used by block power supplies such that the block power supply does not block other outlets. Attach power strip to a permanent location that is easily accessible to devices in the rear of the cabinet. Provide hard wire connection to the Cabinet AC power, controlled by a 15 amp breaker. Do not use plug in power strips.

13. Surge Protection

    Equip each cabinet with devices to protect the control equipment from surges and over voltages.

    Design the surge protector panels to allow for adequate space for a wire connection and surge protector replacement without the removal of terminal blocks or panels. Provide surge protectors for the input sections as detailed below and as shown in the Input Terminal and Surge Arrestor Detail.

    Supply surge protectors that meet the following Specifications.

    a. AC Service Input

    - Include a surge protection unit for each cabinet on the AC service input that meets or exceeds the following requirements: Provide a hybrid type power line surge protection device on the cabinet service panel.
    - Install the protector between the applied line voltage and earth ground.
    - Use a surge protector capable of reducing the effect of lightning transient voltages applied to the AC line that conforms to the following:

Peak surge current for an 8 x 20 μs waveform:	20,000A for 20 occurrences
Clamp voltage @ 20,000A:	280V max
Maximum continuous operating current:	@ 120V / 60 Hz 10A
Series Inductance:	AC Line/AC Neutral - 200 micro henries
Response time:	Voltage never exceeds 280V during surge
Spike suppression for +/- 700 V spike:	+/- 40 V deviation from sine wave at all phases Angles between 0 and 180 degrees.

    - Provide a protector that is modular and uses a 12 pin Beau connector with the following terminals:

      Main Line (AC line first stage terminal)

      Main Neutral (AC neutral input terminal)

      Equipment Line In (AC line second stage input terminal, 10A)

      Equipment Line Out (AC line second stage output terminal, 10A)

      Equipment neutral out (neutral terminal to protected equipment)

      GND (Earth connection)
    - Supply a protector that is epoxy encapsulated in a flame-retardant material.
    - Configure the Equipment Line Out to provide power to the Type 2070 and to the 24 V power supply.

    b. AC+ Interconnect Cable Inputs

    Use a surge protection device to protect each AC interconnect line as it enters the cabinet with a surge protection device that meets or exceeds the following requirements:

    - 3-electrode gas tube type of surge arrestor
    - Striking voltage of 300-500 V DC with a minimum holder over voltage of 155V DC
    - A three terminal device, one of which is connected to ground, the other two are connected across each input respectively

- The units must meet the following minimum requirements:

Impulse breakdown:	Less than 100V in less than 1.1 μs at 10 kV/μs
Impulse breakdown balance:	0.01 microsecond (or less) difference at 10 kV/μs impulse
Energy application:	Withstands 20A AC for one (1) second applied ten (10) times at three (3) minute intervals on either section
Current rating:	10,000A (8 x 20 μs impulse)
Capacitance:	6 pF, line to ground

c. Inductive Loop Detector Inputs

Provide surge arrestors in the cabinet as shown in Table 925-5, Table 925-7 or Table 925-9 for the applicable cabinet. Protect each inductive loop detector channel input by an external surge protection device that meets or exceeds the following requirements:

- A three-terminal device, two (2) of which are connected across the signal inputs of the detector with the third connected to the chassis ground to protect against common mode damage.
- Instantly clamps differential mode surges (induced voltage across the loop detector input terminals) via a semiconductor array. The array appears as a low capacitance to the detector.
- Clamps common mode surges (induced voltage between the loop leads and ground) via solid state clamping devices.
- Withstand 25-100A surge current occurrences of a 10 x 700 μs waveform.
- Have the following clamp characteristics:

Maximum break over voltage:	170 V
Maximum on-stage clamping voltage:	3V
Response Time:	<5 ns
Off-stage leakage current:	<10 μA
Capacitance:	less than 220 pf

- Ensure that the unit also meets the following minimum requirements:

Peak surge current:	6 times
Differential mode:	400 A (8 x 20 ms)
Common mode:	1,000 A (8 x 20 ms)
Estimated occurrences:	500 @ 200 A
Response time:	40 ns
Input capacitance:	35 pF typical
Temperature:	-40° F to +185° F (-40º C to 85º C)
Mounting:	No. 10-32 x 3/8-inch (No. 5 x 10 mm) bolt
Clamp voltage @400 A diff.	Mode: 30 V max.
Clamp voltage @1,000 A comm.	Mode: 30 V max.

d. Signal Load Switches (Switchpacks)

Provide the output of all switchpacks in all output files and output/PDAs with metal oxide varistors (MOV) tied from the AC positive field terminal to the chassis ground to protect switchpacks from surges on the AC output lines

Ensure that these MOVs meet or exceed these requirements:

- Steady state sinusoidal voltage (RMS) rating at 50 to 60 Hz of at least 150 V at 77 ºF (25 °C)
- Steady state applied DC voltage rating of at least 200 V at 77 ºF (25 °C)
- Transient energy rating is of at least 80 J for a single impulse of 10/1,000 μs current waveform at 77 ºF (25 °C)
- Peak current rating of 6,500 A for a single impulse of 8/20 μs waveform with the rated continuous voltage applied
- Varistor voltage of at least 212 V at 1.0mA of DC current applied for the duration of 20 μs to 5s

- Clamping voltage of at least 395 V with an applied 8/20 μs impulse of 100 A
- Typical capacitance at a frequency of 0.1 to 1.0 MHz of 1600 pF
- Two-terminal device, one of which is connected to the AC output of the signal load switch on the output file terminals (backside of the field terminals) with the other connected to AC neutral

e. Communication Inputs

Protect low voltage communications input as it enters the cabinet with a solid-state surge protection unit that meets or exceeds these requirements:

- Dual pair (4-wire) module with a printed circuit board connector, double sided and gold plated for reliability
- Ability to mate with and be installed in a 10-circuit Buchanan connector Part Number PCB1B10S or Tyco Part Number 2-1437410-3 or equivalent
- Usable as two independent signal pairs
- The data circuits pass through the protection in a serial fashion
- C2 connector of the 2070 controller that terminates on the line side of the unit
- Communication field wires for this local side that terminate on the line side of the unit
- Ground terminals connected to power ground
- Ensure that the unit meets the following minimum requirements:

Peak surge current:	10 kA (8 x 20 μs wave shape)
	500A (10 x 700 μs wave shape)
Occurrences @ peak:	50 typical
Response time:	<1ns
Voltage Clamp:	8V line to line
Series Resistance:	24 Ω total
Temperature:	-40 °F (-40 °C) to +185 °F (85 °F)
Primary protector:	3 element gas tube 5kA, (8 x 20μs wave shape), per side
Secondary protector:	Silicon avalance, 1.5 kW minimum

f. Low Voltage DC Inputs

Provide an external surge protection device for each low voltage DC input channel which meets the same requirements as the communication inputs with the following exception of the Voltage clamp, which shall be 30 V line-to-line.

14. Type 2010 Signal Monitors:

a. Introduction

This Specification sets forth the minimum requirements for a rack-mountable, sixteen channel, solid-state 2010 Signal Monitor for Traffic Cabinet Assembly. Ensure that as a minimum, the Signal Monitor complies with all Specifications outlined in Chapter 3 Section 6 of the *California TEES*, August 2002. Where differences occur, this Specification governs. Ensure that the manufacturer of the unit is listed on the current California Department of Transportation (CALTRANS) Qualified Products List (QPL) for signal monitors.

Provide a Signal Monitor that is capable of monitoring sixteen channels consisting of a Green input, a Yellow input, and a Red input for each channel. Ensure that the unit also includes the enhanced monitoring functions described in Subsection 925.2.04.A.15.

b. Monitor Functions

Except for Conflict faults, compute all fault timing for each channel individually.

1.) Conflict Monitoring

Ensure that the Signal Monitor is able to detect the presence of conflicting green or yellow signal voltages on the AC field terminals between two or more non-compatible channels. A Conflict fault (CONFLICT) shall be a latching fault.

2.) Conflict Recognition Time

Ensure the Signal Monitor shall trigger when voltages on any conflicting channels are present for more than 500 ms. Ensure that the Signal Monitor does not trigger when voltages on any conflicting channels are present for less than 200 ms. Conflicting signals sensed for more than 200 ms and less than 500 ms may or may not trigger the unit.

3.) 24VDC Monitoring VDC

Ensure that the Signal Monitor is able to detect that the cabinet +24 Vdc supply has fallen below 18 Vdc. A 24VDC failure (VDC FAIL) shall be a latching fault.

4.) 24VDC Recognition Time

Ensure that the Signal Monitor shall trigger when the voltage on the +24V input is below 18 Vdc for more than 500 ms. Ensure that the Signal Monitor does not trigger when the voltage on the +24V input is below 18 Vdc for less than 200 ms. A voltage level of +22 Vdc will be required to prevent the unit from triggering.

5.) Controller Watchdog Monitoring

Ensure that the Signal Monitor triggers when the Watchdog input does not toggle within the programmed time period (WDT ERROR). Ensure that the unit remains latched in the fault state until reset by the Reset button, an External Reset input command, or AC Line voltage restoring from an AC Line Brownout event. Ensure that a reset resulting from an AC Line Brownout event does not clear the WDT ERROR LED.

a. Controller Watchdog Latch Option

Ensure a programming option sets the Watchdog monitoring function to a latching mode and that only a reset from the Reset button or External Reset input can clear a Watchdog fault. An AC Line brownout condition will not reset the fault.

b. Controller Watchdog Recognition Time

Ensure a programming option sets the maximum Watchdog recognition time to: 1000 + or - 100 ms; or 1500 + or - 100 ms.

c. Controller Watchdog Enable Switch

Provide an internal switch to disable the Watchdog monitoring function. Mount the switch on the PCB and be clearly label "WD ENABLE - ON...OFF". Ensure that placement of the switch in the OFF position causes monitoring of the Watchdog to be inhibited.

d. WDT ERROR LED Control

Ensure that the WDT ERROR LED illuminates when the unit has been triggered by a Watchdog fault. Ensure that it can only be cleared by a reset command from the front panel Reset switch or External Reset input. If the Watchdog monitoring function is inhibited due to the Watchdog Enable switch, the WDT ERROR LED shall flash at a 0.5 Hz rate.

6.) AC Line Monitoring

a. AC Line Brownout Recognition

Ensure that the Signal Monitor is able to detect that the AC Line has fallen below 98 + or - 2 Vac for greater than 400 + or - 50 ms. This shall force the output Relay to the de-energized "fault" state, enable the Stop-Time output, and cause the AC POWER LED to flash at a 2 Hz rate. Ensure that the unit maintains this state until the AC Line voltage rises above 103 + or - 2 Vac for greater than 400 + or - 50 ms. Provide a jumper option which will change the AC Brownout dropout level to 92 + or - 2 Vac and the restore level to 98 + or - 2 Vac.

b. AC Line Power-up and Brownout Delay Time

When the AC Line is greater than 103 + or - 2 volts after power-up or Brownout restore, ensure that the Signal Monitor holds the Output Relay in the de-energized "fault" state and enable the Stop-Time output, for a period of not less than 6.0 + or - 0.5 seconds and not greater than 10.0 + or - 0.5 seconds. Ensure that this flash interval is terminated after at least 6.0 + or - 0.5 seconds if the Signal Monitor has detected at least five transitions of the Watchdog input. If the Signal Monitor does not detect five transitions of the Watchdog input before 10.0 + or - 0.5 seconds, ensure that the Signal Monitor goes to the fault state. During this interval, ensure that the AC POWER LED flashes at a 4 Hz rate.

7.) Red Fail Monitoring

Ensure that the Signal Monitor is able to detect the absence of an active voltage on the green and yellow and red field signal inputs of a channel. Red Fail fault (RED FAIL) shall be a latching fault. Ensure that the

Red Fail monitoring function is enabled for all channels except when the Red Enable input is not active, or pin #EE is active, or Special Function #1 input is active, or Special Function #2 input is active.

a. Red Fail Recognition Time

Ensure the Signal Monitor triggers when an active voltage on one of the three inputs of a channel are absent for more than 1500 ms. Ensure that the Signal Monitor does not trigger when an active voltage on one of the three inputs of a channel are absent for less than 1200 ms. Channels without proper voltages sensed for more than 1200 ms and less than 1500 ms may or may not trigger the unit. Provide an option switch (RF 2010) which will change the fault recognition time to between 700 ms and 1000 ms.

b. Red Interface Cable Fault

Ensure a programming option is provided such that operating without the Red Interface cable installed shall cause the Signal Monitor to enter the fault mode causing the Output relay contacts to close and enabling the Stop-Time output to the controller. To indicate this fault mode, ensure that the Red Fail indicator is illuminated with all fault channel indicators Off.

Ensure that any Red Fail preemption control to the monitor uses the Special Function inputs #1 or #2.

8.) Dual Indication Monitoring

Ensure that the Signal Monitor is able to detect the presence of active voltage on the green and yellow, green and red, or yellow and red field signal inputs of a channel. GYR Dual Indication fault (DUAL IND) shall be a latching fault. Ensure this function is enabled on a per channel basis using dip switches mounted on the PCB labeled "CH1" through "CH16". Ensure that the GYR Dual Indication monitoring function is enabled for all selected channels except when the Red Enable input is not active or pin #EE is active.

a. GY Dual Indication Monitoring

Ensure that the Signal Monitor is able to detect the presence of active voltage on the green and yellow field signal inputs of a channel. GY Dual Indication fault (DUAL IND) shall be a latching fault. Enable this function with a dip switch on the PCB labeled "GY ENABLE". When the switch is in the ON position, monitor all channels for simultaneous active green and yellow inputs on a channel. When selected by the GY ENABLE switch, ensure that the GY Dual Indication monitoring function is disabled when pin #EE is active.

b. Dual Indication Recognition Time

Ensure that the Signal Monitor triggers when multiple inputs are active on a channel for more than 500 ms. Ensure that the Signal Monitor does not trigger when multiple inputs are active on a channel for less than 250 ms. Channels with multiple voltages active for more than 250 ms and less than 500 ms may or may not trigger the unit.

9.) Clearance (Short or Absent Yellow) Monitoring

Ensure that the Signal Monitor is able to detect that a channel has not provided an adequate Yellow Clearance interval during a green to yellow to red sequence. A Sequence failure (SEQUENCE) shall be a latching fault. Ensure that this function is enabled on a per channel basis using dip switches mounted on the PCB labeled "CH1" through "CH16". Ensure that the Sequence monitoring function is enabled for all selected channels except when the Red Enable input is not active or pin #EE is active.

10.) Clearance Recognition Time

Ensure that the Yellow Clearance interval is 2.7 seconds

11.) Flickering Indication Detection

Ensure that the Signal Monitor provides a method of detecting Conflict, Red Fail, and Dual Indication faults that result from intermittent or flickering field signal inputs that may not meet the duration requirements but continue to flicker for an extended period of time. These flickering indications shall result in a latching fault with an indication illuminated along with the resulting Conflict, Red Fail, or Dual Indication indicator. Provide an option switch to disable this option.

12.) Configuration Change Monitoring

On power-up, reset, and periodically during operation, ensure that the Signal Monitor compares the current configuration settings with the previously stored value and if the settings have changed, the Signal Monitor automatically logs the new setting. Ensure that these settings include the permissive diode matrix, all switches, all jumpers, and the Watchdog Enable switch.

Provide a programming option such that any change in the configuration parameters will cause the Signal Monitor to enter the fault mode causing the Output relay contacts to close and enabling the Stop-Time output to the controller. To indicate this fault mode ensure that the PCA indicator will flash at a 4 Hz rate. Depressing the Reset button for 5 full seconds is required to clear this fault and log the new configuration parameters.

If the programming option is not selected, ensure that the unit does not set the fault mode but will still log the configuration change.

13.) Program Card Ajar

Ensure that when the Programming Card is removed or not seated properly, the Signal Monitor forces the Output Relay to the de-energized "fault" state, enable the Stop-Time output, and illuminate the PCA LED. A reset command from the front panel Reset switch or External Reset input is required once the Program Card is in place.

14.) Exit Flash

When the Signal Monitor exits the flash state (Output relay de-energized) as a result of a Reset command or AC Line brownout restore, ensure that the Stop Time output goes to the inactive state 250 + OR - 50 ms before the Output relay transfers to the energized state. This transition will provide an early indication to the Controller Unit that the cabinet will transfer from flash to signal operation.

c. Display Functions

Ensure that it is possible to view the active channels for each individual color (GYR) during operation and when latched in a fault state. When the Signal Monitor is latched in a fault state ensure that it is also be possible to view the active channels for each individual color and fault status for each channel for the current fault and the two previous faults.

1) Previous Fault GYR Display

When the Signal Monitor has been triggered by a fault the channel status display will alternate between the channels which were involved in the fault (fault status) for 2 seconds, and the field signals active at the time of the fault for 6 seconds. The channels involved in the fault will flash their respective Green, Yellow, and Red indicators simultaneously at a 4 Hz rate for the 2 second interval.

The two previous faults may also be displayed individually. This status is not reset by an AC Line power interruption. To enter this display mode remove the Program Card. The sequence is as follows:

Reset	Event	PCA LED	Fault Status LEDs	Channel Status LEDs
---	#1	Single flash	Current Fault Status (newest)	Current Field status
#1	#2	Double flash	Event #2 Fault Status	Event #2 Field status
#2	#3	Triple flash	Event #3 Fault Status (oldest)	Event #3 Field status
(repeats back to top)				

d. Event Logging Functions

Ensure that the Signal Monitor is capable of storing in non-volatile memory a minimum of 100 events. Mark each event with the time and date of the event. These events consist of fault events, AC Line events, reset events, and configuration change events. Provide a graphical means of displaying the signal states of all field inputs for 30 seconds prior to a fault trigger event. Provide the capability to assign a four-digit identification number to the unit shall be provided. Upload the event logs to a PC using the serial port of the Signal Monitor and software provided by the manufacturer.

Ensure each event log report contains the following information:

- Monitor ID#: a four digit (0000-9999) ID number assigned to the monitor.
- Time and Date: time and date of occurrence.
- Event Number: identifies the record number in the log. Event #1 is the most recent event.

1) Monitor Status Report (CS)

Ensure the Current Status report contains the following information:

- Fault Type: the fault type description.
- Field Status: the current GYR field status and field RMS voltages if the monitor is not in the fault state, or the latched field status and field RMS voltages and fault channel status at the time of the fault.

- Cabinet Temperature: the current temperature if the monitor is not in the fault state, or the latched temperature at the time of the fault.
- AC Line Voltage: the current AC Line voltage if the monitor is not in the fault state, or the AC Line voltage at the time of the fault.
- Control Input Status: the current state and RMS voltages of the Red Enable input, EE input, and Special Function #1 and #2 inputs if the monitor is not in the fault state, or the status latched at the time of the fault.

2) Previous Fault Log (PF)

Ensure the Previous Fault log contains the following information:

- Fault Type: the fault type description.
- Field Status: the latched field status with RMS voltages, and fault channel status at the time of the fault.
- Cabinet Temperature: the latched temperature at the time of the fault.
- AC Line Voltage: the AC Line voltage at the time of the fault.
- Control Input Status: the latched state of the Red Enable input, EE input, and Special Function #1 and #2 inputs at the time of the fault.

3) AC Line Event Log (AC)

The AC Line log shall contain the following information:

- Event Type: describes the type of AC Line event that occurred.
  - Power-up—AC on, monitor performed a cold start
  - Interrupt—AC Line < Brownout level
  - Restore—AC restored from brown-out or interruption (AC Off), no cold start
- AC Line Voltage: the AC Line voltage at the time of the event.

4) Monitor Reset Log (MR)

Ensure the Monitor Reset log contains the following information:

The monitor was reset from a fault by the front panel Reset button or External Reset input.

5) Configuration Change Log (CF)

Ensure the Configuration Change log contains the following information:

a. Program Card Matrix: the permissive programming for each channel.

b. Yellow Disable Jumpers: the Yellow Disable programming for each channel.

c. Dual/Sequence Switches: the switch programming for each channel.

d. Option Switches: RF 2010, RP Disable, GY Enable, SF1 Polarity, Sequence Timing, Minimum Flash Enable, Configuration Fault Enable, Red Cable Fault enable, AC Brownout timing.

e. Watchdog Programming: Watchdog Enable, Watchdog Latch, and Watchdog timing.

f. Configuration CRC: A unique CRC value which is based on the configuration of items #a though #e above.

Indicate on the log, which items have been changed since the last log entry.

6) Signal Sequence Log

Provide a log that graphically displays all field signal states for up to 30 seconds prior to the current fault trigger event. Ensure that the resolution of the display is at least 50 milliseconds.

e. Communications Functions

1) Controller Unit Communications

Type A: Ensure that the Signal Monitor is compatible with the protocol of the current GDOT licensed firmware for 2070 controllers and Central System Control. Ensure the 2010 Conflict Monitor supplied is able to communicate via a serial link. to the 2010 Controller and then to a Central System using the current licensed GDOT Central System Software for reporting, configuring and logging.

Type B: Ensure that the Signal Monitor is compatible with the protocol of the current GDOT licensed firmware for 2070 controllers and Central System Control. Ensure the 2010 Conflict Monitor supplied is able to communicate via a RJ-45 connector (Ethernet).

2) Personal Computer Communications

Have the manufacturer provide software to access the Signal Monitor status and event logs described in Subsection 925.2.04.A.14.d. Ensure this software operates with current version of Microsoft Windows or Windows XP™

f. Hardware

1) Red Monitoring

a. Red Field Inputs

Ensure that the Signal Monitor is capable of monitoring sixteen Red field signals. Ensure that a Red input is sensed active when the input voltage exceeds 70 Vrms. Ensure that a Red input is sensed not active when the input voltage is less than 50 Vrms. A Red input may or may not be sensed active when the input voltage is between 50 Vrms and 70 Vrms.

b. Red Enable Input

Ensure that the Red Enable input provides an AC input to the unit which enables Red Monitoring, Dual Indication Monitoring, and Sequence monitoring when the input is sensed active.

Ensure that the Red Enable input is sensed active when the input voltage exceeds 70 Vrms. Ensure that the Red Enable input is sensed not active when the input voltage is less than 50 Vrms. The Red Enable input may or may not be sensed active when the input voltage is between 50 Vrms and 70 Vrms.

c. Special Function Preemption Inputs

Ensure that the Special Function Preemption inputs #1 and #2 provide an AC input to the unit which disables only Red Fail Monitoring (Lack of Output) when either input is sensed active.

Ensure that a Special Function input is sensed active when the input voltage exceeds 70 Vrms. Ensure that a Special Function input is sensed not active when the input voltage is less than 50 Vrms. A Special Function input may or may not be sensed active when the input voltage is between 50 Vrms and 70 Vrms.

Use a PCB mounted switch to provide the option to invert the active status of the Special Function #1 input. When the switch is in the ON position, ensure that the Special Function #1 input is sensed not active when the input voltage exceeds 70 Vrms. Ensure that the Special Function #1 input is sensed active when the input voltage is less than 50 Vrms. The Special Function #1 input may or may not be sensed active when the input voltage is between 50 Vrms and 70 Vrms.

d. Red Interface Connector

This connector provides the required inputs for the unit to monitor the Red field signal outputs. Ensure the connector is a 20 pin connector that mates with the P20 Cable from the output file. Provide a high quality connector that is polarized to insure proper mating with the cable. Ensure Ejector latches are included to facilitate removal and prevent the cable from inadvertently disconnecting. Ensure the unit shall function as a standard 210 Signal Monitor when the cable is disconnected. Use the pin assignments shown in Table 925-1.

Table 925 -1 Red Interface Connector			
Pin	**Function**	**Pin**	**Function**
1	Channel 15 Red	11	Channel 9 Red
2	Channel 16 Red	12	Channel 8 Red
3	Channel14 Red	13	Channel 7 Red
4	Chassis Ground*	14	Channel 6 Red
5	Channel 13 Red	15	Channel 5 Red
6	Special Function #2	16	Channel 4 Red
7	Channel 12 Red	17	Channel 3 Red
8	Special Function #1	18	Channel 2 Red
9	Channel 10 Red	19	Channel 1 Red
10	Channel 11 Red	20	Red Enable
*A jumper option shall be provided to allow the connection of Pin #4 to be made with Chassis Ground.			

2) Front Panel

Ensure the front panel is constructed of sheet aluminum with a minimum thickness of 0.090 in. (2.286 mm), and finished with an anodized coating. Ensure the model information shall be permanently displayed on the front surface.

a. Indicators

Ensure that all display indicators are mounted on the front panel of the Signal Monitor and are water clear, T-1 package, Super Bright type LEDs. Ensure that all fault LEDs are red except the AC POWER indicator which is green. Provide a separate Red, Yellow, and Green indicator for each channel. Label the indicators and provide the information as follows:

- AC POWER

  Ensure the AC Power indicator flashes at a rate of 2 Hz when the unit has detected a low voltage condition as described in Subsection 925.2.04.A.15. Ensure the AC POWER indicator flashes at a rate of 4 Hz during the minimum flash interval as described in Subsection 925.2.04.A.15. Ensure that the indicator illuminates when the AC Line voltage level is restored above the brownout level. Ensure the indicator extinguishes when the AC Line voltage is less than 80 Vac.

- VDC FAILED

  Ensure the VDC FAILED indicator illuminates when a 24VDC fault condition is detected. This indicator remains extinguished if the monitor has not been triggered by a 24VDC fault.

- WDT ERROR

  Ensure the WDT ERROR indicator illuminates when a controller Watchdog fault is detected. Ensure the WDT Error indicator flashes ON once every 2 seconds if the WD Enable switch on the monitor is placed in the OFF position to disable Watchdog monitoring, or the AC Line voltage is below the Watchdog disable level.

- CONFLICT

  Ensure that the CONFLICT indicator illuminates when a conflicting signal fault is detected.

- DIAGNOSTIC

  Ensure the DIAGNOSTIC indicator illuminates when one of the following faults is detected: Internal Watchdog fault, Memory Test fault, or Internal power supply fault. This indicator is intended to inform the service technician of a monitor hardware or firmware failure.

- RED FAIL

  Ensure the RED FAIL indicator illuminates when an absence of signal is detected on a channel(s). Ensure the RED FAIL indicator flashes ON once every two seconds if the RED ENABLE input is not active, or a Special Function input is active, or the EE input is active

- DUAL IND.

  Ensure the Dual IND. indicator illuminates when a GY-Dual or GYR-Dual Indication fault is detected on a channel(s).

- CLEARANCE

  Ensure the Sequence indicator illuminates when the minimum Yellow Clearance time has not been met on a channel(s).

- PCA

  Ensure the PCA indicator illuminates if the Program Card is absent or not properly seated.

  If the unit is in the Diagnostic Display mode, ensure the PCA indicator flashes ON (once, twice, or three times) to indicate the fault event number being displayed. See Subsection 925.2.04.A.15.

- RP DETECT

  Ensure the RP DETECT indicator illuminates when the unit has detected a Conflict, Red Fail, or Dual Indication fault as a result of recurring pulse field inputs.

- CHANNEL STATUS

  Ensure that during normal operation the 48 Channel Status indicators display all active signals (Red, Green, and Yellow).

  In the fault mode, ensure that the Channel Status indicators display all signals active at the time of the fault for six seconds and then indicate the channels involved in the fault for 2 seconds.

b. Front Panel Control-Reset Button

- Provide a momentary SPST Control switch labeled RESET on the unit front panel to reset the monitor circuitry to a non-failed state. Position the switch on the front panel such that the switch can be operated while gripping the front panel handle. Ensure that a reset command issued from either the front panel button or External Reset input is a one-time reset input to prevent the unit from constant reset due to a switch failure or constant external input, and causes all LED indicators to illuminate for 300 ms.
- The Reset button also provides control of the Diagnostic Display mode. For a complete description of Diagnostic Display operation, see Subsection 925.2.04.A.15.

c. Serial Communications Connector

Use this connector to provide EIA-232 serial communications. Ensure that it is a high quality 9 pin metal shell D subminiature type with female contacts. Refer to Table 925-2 for Pin assignments.

Table 925-2 Serial Communications Connector

Pin	Function
1	DCD*
2	TX DATA
3	RX DATA
4	DTR (Data Terminal Ready)
5	SIGNAL GROUND
6	DSR
7	DSR*
8	CTS*
9	NC

* Provide Jumper options to allow the connection of Pin #4 to be made with Pin #7, and the connection of Pin #8 to be made with Pin #1.

3) Electronics

a. RMS Voltage Sampling

Use high speed sampling techniques to determine the true RMS value of the AC field inputs. Sample each AC input at least 32 times per cycle. Ensure that the RMS voltage measurement is insensitive to phase, frequency, and waveform distortion.

b. Internal MPU Watchdog

Use a microprocessor for all timing and control functions. Verify continuing operation of the microprocessor by an independent monitor circuit, that forces the Output Relay to the de-energized "fault" state, enable the Stop-Time output, and illuminate the DIAGNOSTIC indicator if a pulse is not received from the microprocessor within 300 ms.

If the microprocessor should resume operation, ensure the Signal Monitor continues to operate. Ensure that this monitoring circuit is also configurable to latch in the fault state. Ensure the unit requires a power-up cycle to reset the circuit once it is triggered.

c. Sockets

In the interest of reliability, ensure that only the PROM memory device for the microprocessor firmware is socket mounted. Ensure that the PROM memory socket is a precision screw machine type socket with a gold contact finish providing a reliable gas tight seal. Low insertion force sockets or sockets with "wiper" type contacts are not acceptable.

d. Internal Power Supply

Use a built-in, high-efficiency switching power supply to generate all required internal voltages. Ensure that all supply voltages regulated. Failure of the internal power supply to provide proper operating voltages shall force the output Relay to the de-energized "fault" state, enable the Stop-Time output, and illuminate the DIAGNOSTIC indicator. Provide a user replaceable slow blow fuse for the AC Line input. Ensure the unit is operational over the AC Line voltage range of 75 Vac to 135 Vac.

e. EIA-232 Interface

Ensure the EIA-232 port interface electronics is electrically isolated from all monitor electronics except chassis ground.

f. Configuration Parameters

Select user-programmed configuration settings using PCB mounted switches or jumpers. Designs requiring a Personal Computer (PC) to program or verify the configuration parameters are not acceptable. Ensure that user-programmed configuration settings that are transferred to memory are stored in a programmable read-only memory (PROM or EEPROM). Designs using a battery to maintain configuration data are not acceptable.

g. Field Terminal Inputs

Ensure that all 120 Vac field terminal inputs provide an input impedance of 150K 50K ohms and be terminated with a discrete resistor having a power dissipation rating of 0.5 Watts or greater and a voltage rating exceeding 350 volts.

h. Component Specifications

Ensure that all electrical components used in the Signal Monitor are rated by the component manufacturer to operate beyond the full unit operating temperature range of –29 °F to 165 °F(-34 °C to +74 °C).

i. Printed Circuit Boards

Ensure that all printed circuit boards meet the requirements of the *California Traffic Signal Control Equipment Specifications*, January 1989, plus the following requirements to enhance reliability:

- All plated-through holes and exposed circuit traces are plated with solder.
- Both sides of the printed circuit board are covered with a solder mask material.
- The circuit reference designation for all components and the polarity of all capacitors and diodes are clearly marked adjacent to the component. Ensure that Pin #1 for all integrated circuit packages is designated on both sides of all printed circuit boards.
- All electrical mating surfaces are gold plated.
- All printed circuit board assemblies are coated on both sides with a clear moisture-proof and fungus-proof sealant.
- All components and wire harnesses are mounted to the PCB using plated holes. "Piggy back" connections or jumper wires are not acceptable.

15. Model 208 Monitor Unit

Provide Model 208 Monitor Unit in accordance with CALTRANS TEES and the following. Provide monitor that is on the CALTRANS QPL and provides the pin assignment as shown in Table 925-3.

The Model 208 Monitor Unit shall reliably sense and cause a relay output contact (FAILED STATE) when monitoring the following:

- A Watchdog Timer (WDT) Timeout Condition
- Cabinet +24 VDC Power Supply below specified threshold

a. WDT Circuitry shall be provided to monitor a controller unit output line state routed to the monitor unit at its assigned pin. The WDT Circuitry shall sense any line state change and the time between the last change. No state change for 1.5 ± 0.1 seconds shall cause a FAILED state. The timer shall reset at each state change in a NON FAILED state.

1) Only the Unit Reset or a WDT inactive due to the voltage sense shall reset the WDT from a FAILED state.
2) A FAILED state caused by the WDT shall illuminate a front panel indicator light label “WDT ERROR”. The indicator shall remain ON until Unit Reset Issuance.
3) The WDT Circuitry shall sense the incoming VAC Line and when the voltage falls below 98 ± 2VAC for 50 ± 17 ms shall inhibit the WDT Function. When the WDT Circuitry sensed the incoming VAC Line rise above 103 ± 2VAC for 50 ± 2ms the WDT shall become active. A hysteresis between the Voltage Inhibit and the Voltage Active Setting shall be a minimum of 3 Volts.

b. Power Supply Monitor Requirements

1) The monitor unit shall sense the Cabinet +24 VDC Power Supply Output Voltage.
2) Voltages sensed at +18 VDC or below for a duration of 500 ms or longer shall cause a FAILDED state.
3) Voltages sensed at+22 VDC or above shall NOT cause a FAILED state.
4) Voltages sensed below +22 VDC for a duration of 200 ms or less shall NOT cause a FAILED state.
5) All timing and voltages conditions other than those specified above may or may not cause a FAILED state.
6) A FAILED state caused by sensing the power supply shall illuminate a front panel indicator light labeled “VDC FAILED”. The indicator shall remain ON until Unit Reset.
7) Only Unit Reset shall reset the power supply sense circuitry from a FAILED state.

c. FAILED State Output Circuits

1) An electro-mechanical relay shall be provided to switch an output circuit during a FAILED state. The relay coil shall be energized in a NON FAILED State.
2) The relay contacts shall be rated for a minimum of 3 amperes at 120 VAC and 100,000 operations. Contact opening /closing time shall be 30 ms or less.

d. Monitor Unit Reset

1) A momentary SPST CONTROL switch labeled “RESET” shall be provided on the unit front panel to reset the monitor unit circuitry to a NON FAILED state. The switch shall be so positioned on the front panel that the switch can be operated while gripping the front panel handle.
~~2)~~ The unit shall be provided with provision to drive an external NE2H light through a 56K Ohm, ½ Watt Series resistor (resident on unit)
3) The PDA Type 3 WDT Reset Input shall not be sensed by the unit
4) The output relay CONTACT FOR FAILED STATE shall be OPEN.

Table 925-3 Pin Assignments For Model 208 Monitor Unit	
PIN	**FUNCTION**
1/44	DC Ground
2/43	WDT Ext. Reset
5/40	WDT IN
10/35	+24 VDC
15/30	AC-
17/28	Normally Open, Circ. #2
19/26	AC+
20/25	Normally Closed, Circ. #1
21/24	Circ. Common #1 & #2
22/23	WDT Lamp (External)
NOTE: Card connector keyed between pins 2 & 3, and pins 11 & 12.	

16. Model 242 DC Isolator

    Provide Model 242 DC Isolators that are in accordance with the latest version of CALTRANS Specifications as referenced earlier in this section. Provide isolators that:

    - Allow the 242 isolator input signal polarity to easily be inverted without the use of tools. Acceptable methods are removable jumpers or dip switches. Unacceptable methods are soldering or desoldering a diode or resistor.
    - Output is OFF for input voltages greater than 12 volts;
    - Output is ON for voltages of less than 8 volts that have a duration of at least 5 to 25 ms (optional 2-7 ms);
    - Minimum output pulse width is 100 ms with a valid input (can be disabled);
    - Output is optically isolated open collector NPN transistor;
    - Capable of sinking 50 ma when on;
    - Can register a new input within 25 ms of the old signal going away; and
    - Output clamped on power up and down
    - Compatible with 2070 controllers and latest version of CALTRANS TEES including errata

17. Model 200 Switchpack

    Provide Model 200 Switchpacks that are in accordance with the latest version of CALTRANS Specifications as referenced earlier in this section.

18. Model 204 Flasher Unit

    Provide Model 204 Flasher Units that are in accordance with the latest version of CALTRANS Specifications as referenced earlier in this section.

19. Flash Transfer Relay

    Provide Flash Transfer Relays that are in accordance with the latest version of CALTRANS Specifications as referenced earlier in this section.

20. Cabinet Model 332A

    Ensure surge protection conforms to Table 925-5 Required Surge Arrestors for Model 332A Cabinet.

    Supply Model 332A (lower input panel) cabinets, with housing Type 1B, and all components as described in these Specifications.

    Supply cabinets having two input files which conform to the CALTRANS Specifications and configured to accept two 2070 controllers in the top portion of the cabinet. Ensure the cabinet has two shelves provided for controller(s).

Configure the cabinet for dial up communications. Mount a two (2) circuit Buchanan connector on the right side panel (from rear door).

Mount a phone jack with a RJ11 connector above or to the right of the Buchanan terminal block.

Wire the phone jack to the Buchanan and to the Terminal Block (TB0) in accordance with Figure 925-2.

A manual jack shall be installed inside the cabinet. The jack shall intermate with a three circuit 1/4 inch (6.35 mm) diameter phone plug. The tip and ring (middle) circuits of the jack shall-be connected to the logic ground and the interval advance inputs of controller unit. When the manual hand cord is plugged into the jack and the pushbutton is pressed, logic ground shall be connected to the interval advance input of the controller unit.

A Manual ON- OFF Switch shall be provided on the police panel which grounds the Manual Control Enable (C1 Pin 53) input to the controller whenever the switch is in the ON position and advance input (C1 Pin 80).

A manual pushbutton with cord shall be provided. The cord shall have a minimum length of 6 feet (1.8 m). It shall have a 1/4 inch (6.35 mm) diameter, three circuit plug connected to one end and a manual pushbutton enclosed in a hand held enclosure at the other end. A complete cycle (push-release) of the manual pushbutton shall terminate the controller unit interval which is active except the vehicular yellow and all red clearance intervals. Cycling the push-button during the vehicular yellow or all red clearance intervals shall not terminate the timing of those intervals.

21. Cabinet Model 332A with Auxiliary Output File)

    Ensure that this unit meets the requirements of Subsection 925.2.04.A.20 above, except that the cabinet is configured with an Auxiliary Output File. Additionally, the field wiring terminals may be mounted on the rear of the input file.

22. Cabinet Model 336S (Base Mount)

    This unit meets the CALTRANS Specification with the addition of approximately 6 additional inches (150 mm) of cabinet height exclusive of the "M" base adapter. Configure the internal component layout so that the additional space is available in the bottom area of the cabinet cage. Ensure that the field wiring input panels and surge protection conform to Table 925-6 Model 336S Default Input File Assignment Detail and Table 925-7 Required Surge Arrestors for Model 336S Cabinet.

    Ensure that the C1 connector harness is provided with pins for all 104 inputs and outputs from the controller.

    A manual jack shall be installed on the police panel. The jack shall intermate with a three circuit 1/4 inch (6.35 mm) diameter phone plug. The tip and ring (middle) circuits of the jack shall-be connected to the logic ground and the interval advance inputs of controller unit. When the manual hand cord is plugged into the jack and the pushbutton is pressed, logic ground shall be connected to the interval advance input of the controller unit.

    A Manual ON- Off Switch shall be provided on the police panel which grounds the Manual Control Enable (C1 Pin 53) input to the controller whenever the switch is in the ON position

    A manual pushbutton with cord shall be provided. The cord shall have a minimum length of 3 feet (0.9 m). It shall have a 1/4 inch (6.35 mm) diameter, three circuit plug connected to one end and a manual pushbutton enclosed in a hand held enclosure at the other end. A complete cycle (push-release) of the manual pushbutton shall terminate the controller unit interval which is active except the vehicular yellow and all red clearance intervals. Cycling the push-button during the vehicular yellow or all red clearance intervals shall not terminate the timing of those intervals.

23. Cabinet Model 336S (Pole Mount)

    Ensure that this unit meets the requirements of Subsection 925.2.04.A.22 above, except that the cabinet is configured for pole mounting as specified in the General Requirements for Type 170 Cabinet Assemblies.

24. Cabinet Model 336S (Base Mount with Auxiliary Output File)

    Ensure that this unit meets the requirements of Subsection 925.2.04.A.22 above, except that the cabinet is configured with an Auxiliary Output File. Additionally, the field wiring terminals may be mounted on the rear of the input file.

25. Cabinet Model 337

    The Model 337 cabinet is a compact cabinet with an output capacity of four vehicle phases plus two pedestrian phases; the dimensions not to exceed 17 inches (425 mm) deep x 20 inches (500 mm) wide x 35 inches (875 mm) high and its shipping weight not to exceed 175 pounds (80 kg).

    Supply the cabinet assembly with capacity for 11, two-channel slots in the input file.

    Ensure that the pin assignments of the C1 connector are compatible with the 2070 controller as applicable according to the required number of input/outputs.

Ensure that the 337 cabinet uses standard Type 170 input and output file units.

Equip the cabinet with a C2 connector harness with field terminals protected with surge protectors for communication inputs as specified under communications inputs.

Ensure that the cabinet has two full-size doors to allow complete access from the front or back of the cabinet. Design the rack assembly to mount in CALTRANS standard rails to allow for a Model 204 flasher.

Provide a receptacle to accept the plug in power distribution assembly card guides and edge connectors for the input file card guides to support the conflict monitor, and load switches and flash transfer relays.

Due to the compact design of this cabinet assembly, the Department of Transportation may accept a non-standard type of power distribution assembly (PDA).

26. Cabinet Model 334 with Auxiliary Output File for Ramp Metering Operations

    The Controller Cabinet shall comply with the CALTRANS Traffic Signal Equipment Specifications (1989), Model 334 Cabinet Specifications (Chapter 6). **DO NOT** use the February 1993 Amendments for Specifications for the Model 334C Cabinet. Do use the Specification Clarifications dated December 20, 1993.

    Provide Cabinet configured as shown in Figure 925-1.

    Provide Detector Test Switch Panel. Before providing cabinet submit Detector Switch Test panel design and mounting location for approval. Panel shall include one switch for each of the 13 detector inputs.

    a. The Detector Test Switch Panel shall be mounted in the cabinet on the rails. The panel shall be fabricated from brushed aluminum.

    b. Each switch will be labelled as to function. The label shall be silkcreened on the test panel and be at least ¼ inch in height.

    c. A three position switch shall be provided for each detector input. The switch shall function as follows:

       - Down (Momentary) – Call is placed into the controller on the appropriate input in parallel with field input
       - Up (Lock) – Call is placed into the controller on the appropriate input in parallel with field input.
       - Center (Lock) – Normal Operation field output of detector is connected to the controller unit.

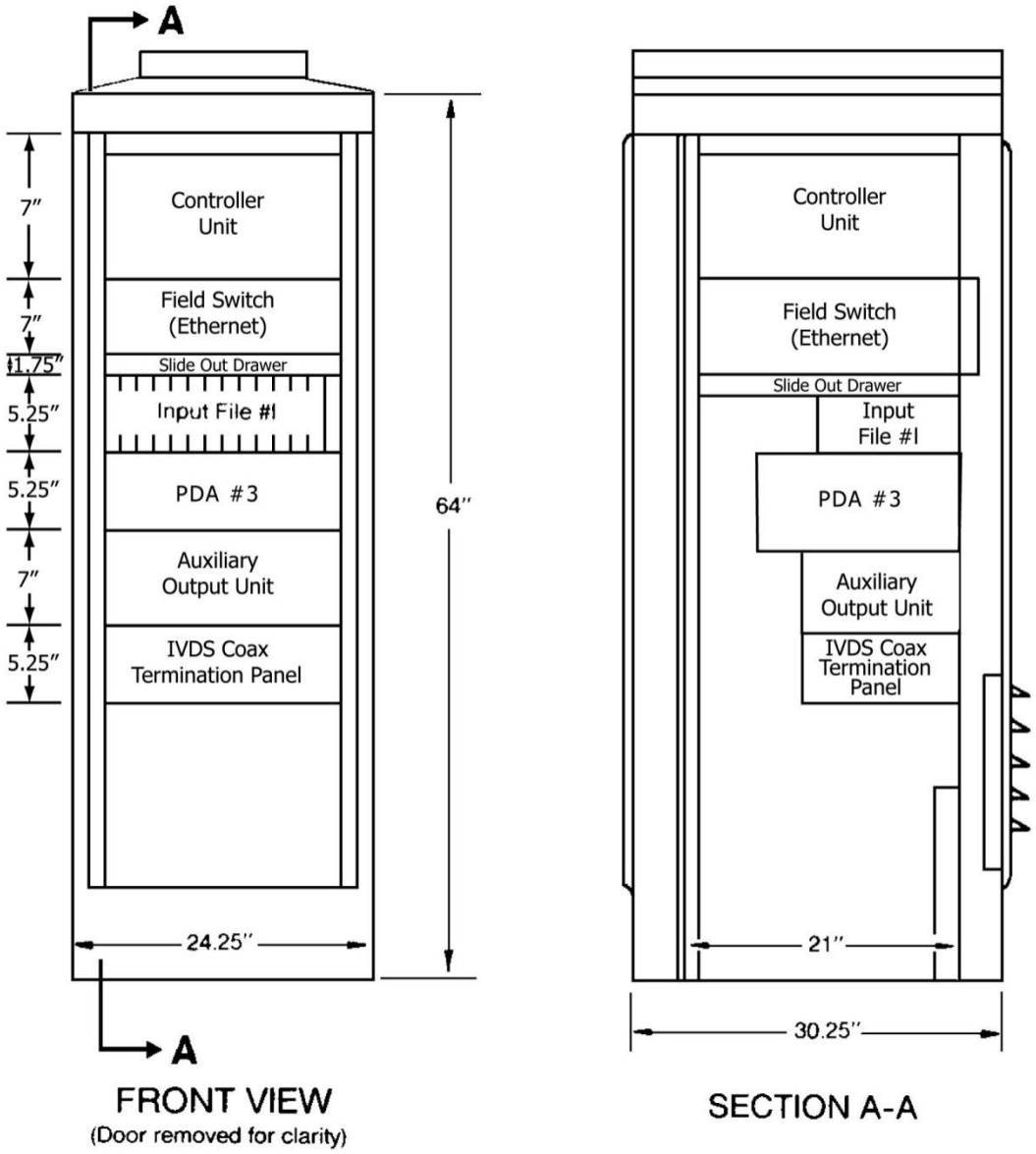

Figure 925-1 Typical 334 Cabinet Configuration

B. Fabrication

Refer to Subsection 925.2.07.A.1for controller cabinet minimum fabrication Specifications.

C. Acceptance

Refer to Subsection 925.2.02 for compliance with CALTRANS QPL.

D. Materials Warranty

Refer Subsection 925.2.01.D for Materials Warranties.

Table 925 – 4 Model 332 Default Input Files Assignment Detail

Upper Input File (I)	**Slot**		**1**	**2**	**3**	**4**	**5**	**6**	**7**	**8**	**9**	**10**	**11**	**12**	**13**	**14**
	Type		**Det**	**Det**	**Det**	**Det**	**Det**	**Det**	**Det**	**Det**	**Det**			**DC**	**DC**	**DC**
	Channel 1	**C1 Pin**	56	39	63	47	58	41	65	49	60		80	67	68	81
		Function	Ph1	Ph2	Ph2	Ph2 CALL	Ph3	Ph4	Ph4	Ph4 CALL	Ph1		INT ADV	Ph2 PED	Ph6 PED	FLASH
		Field Term	TB-2 1,2	TB-2 5,6	TB-2 9,10	TB-4 1,2	TB-4 5,6	TB-4 9,10	TB-6 1,2	TB-6 5,6	TB- 6 9,10		NC	TB- 8 4,6	TB- 8 7,9	NC
	Channel 2	**C1 Pin**	56	43	76	47	58	45	78	49	62		53	69	70	82
		Function	Ph1	Ph2	Ph2	Ph2 CALL	Ph3	Ph4	Ph4	Ph4 CALL	Ph3		MCE	Ph4 PED	Ph8 PED	STOP TIME
		Field Term	TB-2 3,4	TB-2 7,8	TB-2 11,12	TB-4 3,4	TB-4 7,8	TB-4 11,12	TB-6 3,4	TB-6 7,8	TB-6 11,12		NC	TB-8 5,6	TB-8 8,9	NC
Lower Input File (J)	**Slot**		**1**	**2**	**3**	**4**	**5**	**6**	**7**	**8**	**9**	**10**	**11**	**12**	**13**	**14**
	Type		**Det**	**Det**	**Det**	**Det**	**Det**	**Det**	**Det**	**Det**	**Det**			**TBA**	**TBA**	**DC**
	Channel 1	**C1 Pin**	55	40	64	48	57	42	66	50	59		54	71	72	51
		Function	Ph5	Ph6	Ph6	Ph6 CALL	Ph7	Ph8	Ph8	Ph8 CALL	Ph5			EVA	EVB	R/R
		Field Term	TB-3 1,2	TB-3 5,6	TB-3 9,10	TB-5 1,2	TB-5 5,6	TB-5 9,10	TB-7 1,2	TB-7 5,6	TB- 7 9,10			TB- 9 4,6	TB- 9 7,9	TB- 9 10,12
	Channel 2	**C1 Pin**	55	44	77	48	57	46	79	50	61		75	73	74	52
		Function	Ph5	Ph6	Ph6	Ph6 CALL	Ph7	Ph8	Ph8	Ph8 CALL	Ph7			EVC	EVD	
		Field Term	TB-3 3,4	TB-3 7,8	TB-3 11,12	TB-5 3,4	TB-5 7,8	TB-5 11,12	TB-7 3,4	TB-7 7,8	TB-7 11,12			TB-9 5,6	TB-9 8,9	TB- 9 11,12

Table 925-5 Required Surge Arrestors for Model 332 Cabinet		
Field Terminal Block	**Terminals**	**Required Arrestor**
TB-8	1-12	Section 925.2.04.A.13.f
TB-9	10-12	Section 925.2.04.A.13.f
TB-9	4-9	Terminal Block only Section 925.2.04.A.13.f
TB-2, TB-3, TB-4, TB-5, TB-6, TB-7	1-12	Section 925.2.04.A.13.c

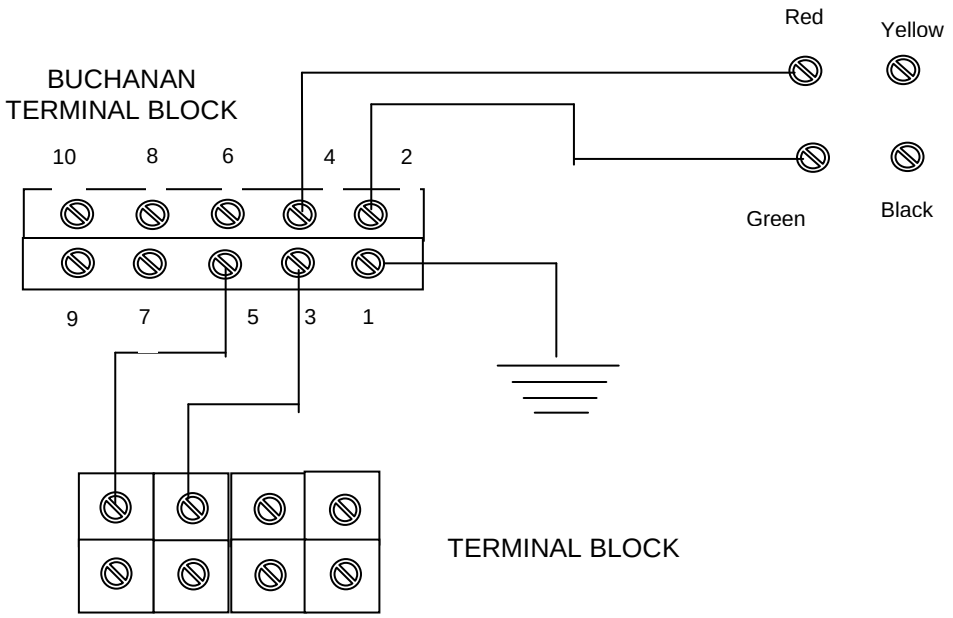

Note: For a typical signal installation, the Model 332 cabinet is the design standard.

Figure 925-2—Wiring Diagram for Dial-up Communications

Table 925-6 Model 336S Default Input File Assignment Detail

Slot		1	2	3	4	5	6	7	8	9	10	11	12	13	14
Type		**Det**	**Det**	**Det**	**Det**	**Det**	**Det**	**Det**	**Det**	**DC**	**TBA**	**TBA**	**DC**	**DC**	**DC**
Channel 1	**C1 Pin**	56	39	58	41	55	40	57	42	51	71	72	67	68	81
	Function	Ph1	Ph2	Ph3	Ph4	Ph5	Ph6	Ph7	Ph8	SE1	EVA	EVB	Ph2 PED	Ph6 PED	FLASH
	Field Term	TB-7 1,2	TB-7 5,6	TB-7 9,10	TB-8 1,2	TB-8 5,6	TB-8 9,10	TB-9 1,2	TB-9 5,6	TB- 5 1,2	TB- 5 5,6	TB- 5 9,10	TB- 4 1,2	TB- 4 5,6	NC
Channel 2	**C1 Pin**	47	43	49	45	48	44	50	46	52	73	74	69	70	82
	Function	Ph2 CALL	Ph2	Ph4 CALL	Ph4	Ph6 CALL	Ph6	Ph8 CALL	Ph8	R/R	EVC	EVD	Ph4 PED	Ph8 PED	STOP TIME
	Field Term	TB-7 3,4	TB-7 7,8	TB-7 11,12	TB-8 3,4	TB-8 7,8	TB-8 11,12	TB-9 3,4	TB-9 7,8	TB-5 3,4	TB-5 7,8	TB-5 11,12	TB-4 3,4	TB-4 7,8	NC

Table 925-7 Required Surge Arrestors for Model 336S Cabinet

Field Terminal Block	Terminals	Required Arrestor
TB-4	1-12	Section 925.2.04.A.13.f
TB-5	1-4	Section 925.2.04.A.13.f
TB-5	5-12	Terminal Block only Section 925.2.04.A.13.f
TB-7, TB-8, TB-9	1-12	Section 925.2.04.A.13.c

Table 925-8 Model 334 Default Input File Assignment Detail

Slot		1	2	3	4	5	6	7	8	9	10	11	12	13	14
Type		**Det**	**Det**	**Det**	**Det**	**Det**	**Det**	**Det**	**Det**	**Det**	**Det**	**Det**	**TBA**	**TBA**	**TBA**
Channel 1	**C1 Pin**	46	50	49	55	51	57	59	61	81	79	53	41	43	45
	Function	L1 D1	L2 D2	L1 Q1	L3 Q3	L1 MLA	L2 MLA	L3 MLA	L4 MLA		L3 D3				
	Field Term	TB-2 1,2	TB-2 5,6	TB-2 9,10	TB-3 1,2	TB-3 5,6	TB-3 9,10	TB-4 1,2	TB-4 5,6	TB-4 9,10	TB-5 1,2	TB-5 5,6	TB-5 9,10	TB-6 1,2	TB-6 5,6
Channel 2	**C1 Pin**	39	47	48	56	52	58	60	62	80	82	54	40	42	44
	Function	L1 P1	L2 P2	L2 Q2		L1 MLB	L2 MLB	L3 MLB	L4 MLB		L3 P3				
	Field Term	TB-2 3,4	TB-2 7,8	TB-2 11,12	TB-3 3,4	TB-3 7,8	TB-3 11,12	TB-4 3,4	TB-4 7,8	TB-4 11,12	TB-5 3,4	TB-5 7,8	TB-5 11,12	TB-6 3,4	TB-6 7,8

Table 925-9 Required Surge Arrestors for Model 334 Cabinet

Field Terminal Block	Terminals	Required Arrestor
TB-2, TB-3, TB-4	1-12	Section 925.2.04.A.13.c
TB-5	1-4	Section 925.2.04.A.13.c

Table 925 - 10 Model 334 PDA Type 3 Output File

	SP 1					SP 2					SP 3				
	C1 Pin	**Out #**	**Conn**	**Func**	**Field Term**	**C1 Pin**	**Out #**	**Conn**	**Func**	**Field Term**	**C1 Pin**	**Out #**	**Conn**	**Func**	**Field Term**
SP R	2	0	C6-1	Warn 1	T4-7	4	2	C6-3	Lane 1 R	T4-4	7	5	C6-6	Lane 2 R	T4-1
SP Y	37	34	C6-9		T4-8	5	3	C6-4	Lane 1 Y	T4-5	8	6	C6-7	Lane 2 Y	T4-2
SP G	3	1	C6-2	Warn 2	T4-9	6	4	C6-5	Lane 1 G	T4-6	9	7	C6-8	Lane 2 G	T4-3

Table 925 - 11 Model 334 Auxiliary Output File

	SP 9					SP 10					SP 11				
	C1 Pin	**Out #**	**Conn**	**Func**	**Field Term**	**C1 Pin**	**Out #**	**Conn**	**Func**	**Field Term**	**C1 Pin**	**Out #**	**Conn**	**Func**	**Field Term**
SP R	97	53	C5-14	Lane 3 R	A124	94	50	C5-11	Not used	A121	91	48	C5-9	Not used	A114
SP Y	98	54	C5-15	Lane 3 Y	A125	95	51	C5-12	Not used	A122	101	37	C5-18	Not used	A115
SP G	99	55	C5-16	Lane 3 G	A126	96	52	C5-13	Not used	A123	93	49	C5-10	Not used	A116
	SP 12					**SP 13**					**SP 14**				
	C1 Pin	**Out #**	**Conn**	**Func**	**Field Term**	**C1 Pin**	**Out #**	**Conn**	**Func**	**Field Term**	**C1 Pin**	**Out #**	**Conn**	**Func**	**Field Term**
SP R	88	45	C5-6	Not used	A111	85	42	C5-3	Not used	A104	83	40	C5-1	Not used	A101
SP Y	89	46	C5-7	Not used	A112	86	43	C5-4	Not used	A105	100	36	C5-17	Not used	A102
SP G	90	47	C5-8	Not used	A113	87	44	C5-5	Not used	A106	84	41	C5-2	Not used	A103

925.2.05 Type ITS Cabinet Assemblies

A. Requirements

Ensure that the cabinet assembly meets the requirements of the CALTRANS Specifications as described in this document. In addition to the CALTRANS Specifications, ensure that the cabinet assembly conforms to the requirements listed below, which take precedence over conflicting CALTRANS Specifications.

1. Cabinet configuration:

   Supply cabinets in accordance with the following information and table 925-12.

   a. Cabinet Traffic Signal Application - Series 340
      - 340 - 4 Door Cabinet with “P” Base Ground Mount
      - 342 - 2 Door Cabinet with “170” Base (332) Ground Mount
      - 346 - 2 Door Cabinet with ”170” Base (336S), Adaptor Mount

   b. Cabinet Traffic Management Application - Series 350
      - 354 - 2 Door Cabinet with “170” Base (332) Ground Mount
      - 356 - 2 Door Cabinet with “170” Base (336S) Adaptor Mount

Table 925-12 ITS Cabinet Configurations

Items	ITS Cabinet Versions				
	340	342	346	354	356
	Qty	Qty	Qty	Qty	Qty
Housing # 1/ Cage #1		1		1	
Housing # 2/Cage #2			1		1
Housing #3/Two Cage #1	1				
“J” Panel Cage #1	4	2		2	
“J” Panel Cage #2			2		2
Service Panel Assembly with AC -/EG Bus	1	1	1	1	1
Raw/Clean AC power Assembly	1	1	1	1	1
Raw Clean AC power Extension	1				
AC Clean Module Assembly	1				
DC Power/Comm Assembly	2	1	1	1	1
DC Power/Comm Extension	2	1		1	1
Cabinet Shelf Assembly	2	1	1	1	1
Input Assembly	3	2	1	1	1
Six Pack Output Assembly	1			1	1
Fourteen Pack output Assembly	1	1	1		
PDA ITS Assembly	1	1	1	1	1
Control/Serial Bus harness	8	6	4	4	4
Serial Bus 3 Harness	3	1	1	1	1

NOTE: Input Assembly shall include a Model 218 SIU. Output Assembly shall include a Model 218 SIU, Model 214 AMU and Model 205 Transfer Relays. The PDA ITS (Traffic Signal Application) shall include two Model 204 Flasher Units, Model 212 CMU and two Model 216 Power Supply Units and attached harnesses. The PDA ITS (Traffic Management System Application) shall include Model 212 CMU and two Model 216 Power Supply Units and attached harnesses.

   c. Model 340 Cabinet:
      - Field termination panels
      - 9 – Flash Transfer Relays
      - 2 – Model 204 Flashers

- Specific Equipment Layout and other cabinet devices determined on a project specific basis

d. Model 342 Cabinet:
- 1-Model 242 DC Isolator
- 6- Flash Transfer Relays
- 2-Model 204 Flashers

e. Model 346 Cabinet
- 1-Model 242 DC Isolator
- 6-Flash Transfer Relays
- 2-Model 204 Flasher
- 1-"M" Base Adapter installed (Base Mount Cabinets Only)
- 1-Aluminum Cover Plate for Cabinet Bottom (Pole Mount Cabinets Only)
- Model 354 Cabinet:
- Specific Equipment Layout and additional cabinet equipment determined on a project specific basis.
- Model 356 Cabinet
- Specific Equipment Layout and additional cabinet equipment determined on a project specific basis.
- 1-"M" Base Adapter installed (Base Mount Cabinets Only)
- 1-Aluminum Cover Plate for Cabinet Bottom (Pole Mount Cabinets Only)

Note: Include above components in cabinet at time of delivery.

Other auxiliary cabinet components such as controllers, load switches, etc. will be ordered as separate items.

2. Finish

Use cabinets that have a bare aluminum finish (see Subsection 925.2.07.A.1 for controller-cabinet minimum fabrication specifications).

3. Locks

Equip the main cabinet door with locks that accept No. 2 Corbin keys. Provide two sets of keys with each cabinet. One set of keys is defined as one – No. 2 key and one - police panel key.

4. Power

Equip the cabinet assemblies with an ITS power distribution assembly to generate AC and DC power for the electronic components, except the DC power for the controller units.

5. Mounting

Equip the cabinets for pole or base mounting, as specified in the Plans.

a. Base Mount

Supply Model 346 and 356 cabinets, when specified as base mount, with a “M” base-mounting adapter installed.

b. Pole Mount

Supply Model 346 and 356 cabinets, when specified as pole mount, with two exterior pole mounting brackets that allow for mounting on steel, concrete, and timber poles.

Ensure that the bracket mounting holes are properly reinforced with metal plates of adequate size and strength, welded longitudinally across the inside depth of the cabinet.

Ensure that the exterior-mounting bracket is shipped installed on the cabinet housing. Additionally, provide an aluminum plate, which covers the bottom cabinet opening.

6. Cabinet Light

Include in each cabinet one fluorescent strip lighting fixture mounted inside the top front portion of the cabinet. Do not use a screw in type fluorescent lamp.

The fixture includes a cool white lamp, covered, and operated by a normal power factor, UL listed ballast.

Install a door-actuated switch to turn on the cabinet light when either door is opened.

7. Cabinet Interlock

   Do not install the interlock circuit, as detailed in the CALTRANS Specifications.

8. Cabinet Drawer

   Equip each Model 340, 342, 346, 352 and 356 cabinet with an aluminum storage compartment mounted in the rack assembly with the approximate following dimensions: 16 inches (400 mm) wide, 14 inches (350 mm) long, and 1.75 inches (44 mm) deep.

   Mount this compartment directly under the Type 2070 controller. Provide a drawer with telescoping drawer guides to allow full extension from the rack assembly.

   When extended, the storage compartment opens to provide storage space for cabinet documentation and other miscellaneous items.

   Ensure that the storage compartment be of adequate construction to support a weight of 25 pounds (12 kg) when extended.

   Provide a top for the storage compartment that has a non-slip plastic laminate attached, which covers a minimum of 90% of the surface area of the top.

9. Test Program

   Supply each cabinet with a diagnostic test program, which verifies the operation of the cabinet. Ensure that the program can test cabinet wiring related to the output file, input file, and police panel and flash switches. In addition, ensure that the program can check the operation of the SIU, AMU and CMU by generating all possible conflicts, in sequence.

10. Surge Protection

    Equip each cabinet with devices to protect the control equipment from surges and over voltages.

    Design the surge protector panels to allow for adequate space for a wire connection and surge protector replacement without the removal of terminal blocks or panels. Provide surge protectors for the input sections as detailed below and as shown in the Input Terminal and Surge Arrestor Detail.

    Supply surge protectors that meet the following Specifications.

    a. AC Service Input

       - Include a surge protection unit for each cabinet on the AC service input that meets or exceeds the following requirements:
         - Provide a hybrid type power line surge protection device on a service panel which plugs into a 12 pin Beau Connector which mounts on a service panel.
       - Install the protector between the applied line voltage and earth ground. Use a surge protector capable of reducing the effect of lightning transient voltages applied to the AC line that conforms to the following:
         - Peak surge current for an 8 x 20 μs waveform:
         - 20,000A for 20 occurrences
         - Clamp voltage @ 20,000A
         - 280V max
         - Maximum continuous operating current:
         - @ 120V / 60 Hz 10A
         - Series Inductance:
         - AC Line/AC Neutral - 200 microhenries
         - Response time:
         - Voltage never exceeds 280V during surge
         - Spike suppression for +/- 700 V spike:
         - +/- 40 V deviation from sine wave at all phases angles between 0 and 180 degrees.
       - Provide a protector with the following terminals:
         - Main Line (AC line first stage terminal)
         - Main Neutral (AC neutral input terminal)
         - Equipment Line In (AC line second stage input terminal, 10A)

- Equipment Line Out (AC line second stage output terminal, 10A)
- Equipment neutral out (neutral terminal to protected equipment)
- GND (Earth connection)

- Supply a protector that is epoxy encapsulated in a flame-retardant material.
- Configure the Equipment Line Out to provide power to the Type 2070 and to the 24 V power supply.

b. Inductive Loop Detector Inputs

Protect each inductive loop detector channel input by an external surge protection device that meets or exceeds the following requirements:

- A three-terminal device, two (2) of which are connected across the signal inputs of the detector with the third connected to the chassis ground to protect against common mode damage.
- Instantly clamps differential mode surges (induced voltage across the loop detector input terminals) via a semiconductor array. The array appears as a low capacitance to the detector.
- Clamps common mode surges (induced voltage between the loop leads and ground) via solid state clamping devices.
- Withstand 25-100A surge current occurrences of a 10 x 700 μs waveform.
- Have the following clamp characteristics:

Maximum break over voltage:	170 V
Maximum on-stage clamping voltage:	3V
Response Time:	<5 ns
Off-stage leakage current:	<10 μA
Capacitance:	less than 220 pf

- Ensure that the unit also meets the following minimum requirements:

Peak surge current:	6 times
Differential mode:	400 A (8 x 20 ms)
Common mode:	1,000 A (8 x 20 ms)
Estimated occurrences:	500 @ 200 A
Response time:	40 ns
Input capacitance:	35 pF typical
Temperature:	-40° F to +185° F (-40º C to 85º C)
Mounting:	No. 10-32 x 3/8-inch (No. 5 x 10 mm) bolt
Clamp voltage @ 400 A diff. Mode:	30 V max.
Clamp voltage @ 1,000 A comm.. Mode:	30 V max.

c. Signal Load Switches (Switchpacks)

Provide the output of the switchpack in the output file with transient protection via the nine position transient protection device in the output file. Protect switchpacks from surges on the AC output lines.

Ensure that the transient protectors meet or exceed these requirements:

- Steady state sinusoidal voltage (RMS) rating at 50 to 60 Hz of at least 150 V at 77 ºF (25 °C)
- Steady state applied DC voltage rating of at least 200 V at 77 ºF (25 °C)
- Transient energy rating is of at least 80 J for a single impulse of 10/1,000 μs current waveform at 77 ºF (25 °C)
- Peak current rating of 6,500 A for a single impulse of 8/20 μs waveform with the rated continuous voltage applied
- Varistor voltage of at least 212 V at 1.0mA of DC current applied for the duration of 20 μs to 5s
- Clamping voltage of at least 395 V with an applied 8/20 μs impulse of 100 A
- Typical capacitance at a frequency of 0.1 to 1.0 MHz of 1600 pF

- Two-terminal device, one of which is connected to the AC output of the signal load switch on the output file terminals (backside of the field terminals) with the other connected to AC neutral

d. Communication Inputs

Protect low voltage communications input as it enters the cabinet with a solid-state surge protection unit that meets or exceeds these requirements:

- Dual pair (4-wire) module with a printed circuit board connector, double sided and gold plated for reliability
- Ability to mate with and be installed in a 10-circuit Buchanan connector Part Number PCBIB10S or Tyco Part Number 2-1437410-3 or equivalent
- Usable as two independent signal pairs
- The data circuits pass through the protection in a serial fashion
- C2 connector of the 2070 controller that terminates on the line side of the unit
- Communication field wires for this local side that terminate on the line side of the unit
- Ground terminals connected to power ground
- Ensure that the unit meets the following minimum requirements:

Peak surge current:	10 kA (8 x 20 μs wave shape)
	500A (10 x 700 μs wave shape)
Occurrences @ peak:	50 typical
Response time:	<1ns
Voltage Clamp:	8V line to line
Series Resistance:	24 Ω total
Temperature	-40 ^{o}F (-40 ^{o}C) to +185 ^{o}F (85 ^{o}F)
Primary protector:	3 element gas tube 5kA, (8 x 20μs wave shape), per side
Secondary protector:	Silicon avalance, 1.5 kW minimum

e. Low Voltage DC Inputs

Provide an external surge protection device for each low voltage DC input channel which meets the same requirements as the communication inputs with the following exception of the Voltage clamp, which shall be 30 V line-to-line.

11. Type 212 ITS Cabinet Monitor Unit

a. Introduction

Supply each cabinet with Type 212 ITS Cabinet Monitor Unit (CMU). Ensure the Type 212 CMU meets the CALTRANS TEES Specifications and functions as a unit with the a Type 214 Auxiliary Monitor Unit to provide the following monitoring functions: Cabinet Power Supplies,; Conflicting Channel Monitor, Serial Bus1 and 3 Error; Message 62; Diagnostic Error; Multiple Channel Inputs; Lack of Signal Inputs; Yellow Clearance; Yellow plus Red Clearance; Police and Power Distribution Switch Monitor; door Switches and Main Contactor Status; Circuit Breakers; Flash Unit Output Status; and AC Line Level Sense. Ensure the Unit supplied is listed on the most recent California Department of Transportation Qualified Products List (QPL).

b. Configuration

Supply Type 212 CMU capable of monitoring up to 28 physical load switch channels (RYG) plus 4 virtual channels for a total of 32 channels.

c. Programming

Ensure complete programming of the Type 212 CMU is by an interchangeable Datakey nonvolatile memory device. The Datakey shall store all of the configuration parameters. Ensure the programming of the datakey can easily be accomplished by a PC and provide datakey and programming device with the delivery of the first unit ordered. Orders of multiple ITS cabinets require delivery or 1 programming device with PC software for every 10 cabinets.

d. Logging

Ensure the Type 212 CMU maintains a non-volatile event log recording. The complete intersection status as well as previous fault events, AC Line events, configuration changes, monitor resets, cabinet temperature and true RMS voltages for all field inputs. A real time clock time shall stamp each log event with the time and date.

Ensure a Signal Sequence History Log is stored in nonvolatile memory. The information stored in the signal sequence log shall provide graphic displays of up to 30 seconds of signal status prior to the fault trigger event with 50 ms resolution.

The Type 212 CMU shall be provided with PC Software that allows a review of status, event log review and archival.

12. Type 214 ITS Auxiliary Monitor Unit

a. Introduction

Supply each ITS cabinet output assembly with a Type 214 ITS Auxiliary Monitor Unit (AMU). Ensure the Type 214 CMU meets the CALTRANS TEES Specifications and functions with the a Type 212 Cabinet Monitor Unit to provide cabinet monitoring functions to perform the following monitoring functions: Cabinet Power Supplies, Conflicting Channel Monitor, Serial Bus 1 and 3 Error; Message 62; Diagnostic Error; Multiple Channel Inputs; Lack of Signal Inputs; Yellow Clearance; Yellow plus Red Clearance; Police and Power Distribution Switch Monitor; door Switches and Main Contactor Status; Circuit Breakers; Flash Unit Output Status; and AC Line Level Sense. Ensure the Unit supplied is listed on the most recent California Department of Transportation Qualified Products List (QPL). The Type 214 AMU shall provide the field signal sensing.

b. Current Monitoring

Supply Type 214 AMU capable of operating in a 14 channel mode or a 6 channel mode. Ensure the address select is correct for the output assembly in which the Model 214 AMU is installed.

c. Diagnostics

Ensure the Type 214 AMU has self diagnostic tests that execute continuously to provide for correct operation to properly monitor the current for use with LED signal heads.

13. Type 218 ITS Serial Interface Unit

a. Introduction

Supply each input and output assembly with a Type 218 ITS Serial Interface Unit (SIU). Ensure the Type 218 ITS SIU supplied meets the CALTRANS TEES Specifications. Ensure the Unit supplied is listed on the most recent California Department of Transportation Qualified Products List (QPL). The Type 218 ITS SIU shall provide the interface between the 2070 controller and the input and output files.

b. Configuration

Supply Type 218 SIU capable of operating in all input and output modes. Provide a Model 218 SIU that is configured correctly for the input or output file for which it is supplied.

c. Programming

Ensure programming of the Type 218 SIU is programmed by assembly mounted address jumpers and that no other setup is required.

d. Diagnostics

Ensure the Type 218 SIU supplied has a complete set of internal diagnostics self-tests run continuously to monitor critical components of the unit. Provide unit with a front panel LED indicator that can be used to report the current Input/Output assembly address assignment of the unit for cabinet configuration verification. Ensure unite has a diagnostic EIA-232 port on the front panel to interface with the SIU 218 functions.

14. Model 242 DC Isolator

Provide Model 242 DC Isolators that are in accordance with the latest version of CALTRANS Specifications as referenced earlier in this section. Provide isolators that:

- Allow 242 isolator input signal polarity to easily be inverted without the use of tools. Acceptable methods are removable jumpers or dip switches. Unacceptable methods are soldering or desoldering a diode or resistor.
- Output is OFF for input voltages greater than 12 volts;
- Output is ON for voltages of less than 8 volts that have a duration of at least 5 to 25 ms (optional 2-7 ms);

- Minimum output pulse width is 100 ms with a valid input (can be disabled);
- Output is optically isolated open collector NPN transistor;
- Capable of sinking 50 ma when on;
- Can register a new input within 25 ms of the old signal going away; and
- Output clamped on power up and down

15. Model 200 Switchpack

    Provide Model 200 Switchpacks that are in accordance with the latest version of CALTRANS Specifications as referenced earlier in this section.

16. Model 204 Flasher Unit

    Provide Model 204 Flasher Units that are in accordance with the latest version of CALTRANS Specifications as referenced earlier in this section.

17. Flash Transfer Relay

    Provide Flash Transfer Relays that are in accordance with the latest version of CALTRANS Specifications as referenced earlier in this section.

18. Cabinet Model 342

    Provide Cabinet Model 342 that meets the CALTRANS Specification with the addition of surge protection as detailed in Table 925-13 Model 342 ITS Cabinet Default Input Files Assignment Detail, Table 925-14 Required Surge Arrestors for Model 342 ITS Cabinet, and Table 925-15 Model 342 & 346 ITS Cabinet Default Output File Assignment Detail.

    Supply Model 342 with lower input panel cabinets, with housing Type 1, and all components as described in these Specifications.

    Supply cabinets having two input files which conform to the CALTRANS Specifications and configured to accept two 2070 controllers in the top portion of the cabinet.

    Configure the cabinet for dial up communications. Mount a two (2) circuit Buchanan connector on the right side panel (from rear door).

    Mount a phone jack with a RJ11 connector above or to the right of the Buchanan terminal block.

    Wire the phone jack to the Buchanan and to the Terminal Block (TB0) in accordance with Figure 925-3.

19. Cabinet Model 346 (Base Mount)

    This unit meets the CALTRANS Specification with the addition of approximately 6 additional inches (150 mm) of cabinet height exclusive of the "M" base adapter. Configure the internal component layout so that the additional space is available in the bottom area of the cabinet cage. Ensure that the field wiring input panels and surge protection conform to Table 925-16 Model 346 ITS Cabinet Default Input File Assignment Detail, Table 925-17 Required Surge Arrestors for Model 346 Cabinet, and Table 925-15 Model 342 & 346 Default ITS Cabinet Default Output File Assignment.

20. Cabinet Model 346 (Pole Mount)

    Ensure that this unit meets the requirements of Subsection 925.2.04.A.19 above, except that the cabinet is configured for pole mounting as specified in the General Requirements for Type ITS Cabinet Assemblies.

21. Cabinet Model 340

    The Model 340 cabinet configuration will be determined by the special provisions of the project.

    Ensure that the input and output port assignments are compatible with the 2070 controller as applicable according to the required number of input/outputs. Ensure that the 340 cabinet uses standard ITS cabinet input and output file units.

    Equip the cabinet with a C2 connector harness with field terminals protected with surge protectors for communication inputs as specified under communications inputs.

    Ensure that the cabinet has four full-size doors to allow complete access from the front or back of the cabinet. Design the rack assembly to mount in CALTRANS standard rails to allow for a Model 204 flasher.

    Provide a receptacle to accept the plug in power distribution assembly card guides and edge connectors for the input file card guides to support the conflict monitor, and load switches and flash transfer relays.

B. Fabrication

Refer to Subsection 925.2.07.A.1 for controller cabinet minimum fabrication Specifications.

C. Acceptance

Refer to Subsection 925.2.02 for compliance with CALTRANS QPL.

D. Materials Warranty

Refer Subsection 925.2.01.D for Materials Warranties.

Table 925 – 13 Model 342 ITS Cabinet Default Input Files Assignment Detail

Input File	Chan	Item	File Slot 1	2	3	4	5	6	7	8	9	10	11	12
1	Upper	SIU Pin	A5	A6	A7	A8	A9	A10	A11	A12	A13	A14	A15	A16
		SIU Byte,Bit	2,6	3,0	3.2	3,4	3,6	4,0	4,2	4,4	4,6	5,0	5,2	5,4
		SIU Input #	7	9	11	13	15	17	19	21	23	25	27	29
		2070 Input #	17	0	28	8	22	6	43	25	51	32	12	38
		2070 Port	3.2	1.1	4.5	2.1	3.7	1.7	6.4	4.2	7.4	5.1	2.5	5.7
		Function	Ph 1 Det	Ph 2 Det	Ph 2 Det	Ph 2 Det	Ph 3 Det	Ph 4 Det	Ph 4 Det	Sp Det 1	Sp Det 5	Pd 2 Det	Pre 1	Pre 5
		Field Term	TB-2 1,2	TB-2 5,6	TB-2 9,10	TB-4 1,2	TB-4 5,6	TB-4 9,10	TB-6 1,2	TB-6 5,6	TB-6 9,10	TB-8 4,6	TB-9 10,12	TB-9 5,6
	Lower	SIU Pin	B5	B6	B7	B8	B9	B10	B11	B12	B13	B14	B15	B16
		SIU Byte,Bit	2,7	3,1	3,3	3,5	3,7	4.1	4,3	4,5	4,7	5,1	5,3	5,5
		SIU Input #	8	10	12	14	16	18	20	22	24	26	28	30
		2070 Input #	21	4	41	19	2	30	10	53	52	34	13	39
		2070 Port	3.6	1.5	6.2	3.4	1.3	4.7	2.3	7.6	7.5	5.3	2.6	5.8
		Function	Ph 1 Det	Ph 2 Det	Ph 2 Det	Ph 3 Det	Ph 4 Det	Ph 4 Det	Ph 4 Det	Sp Det 2	Sp Det 6	Pd 4 Det	Pre 2	Pre 6
		Field Term	TB-2 3,4	TB-2 7,8	TB-2 11,12	TB-4 3,4	TB-4 7,8	TB-4 11,12	TB-6 3,4	TB-6 3,4	TB-6 11,12	TB-8 5,6	TB-9 11,12	TB-9 8,9
	Opto Inputs	SIU Pin	B25	A26	B26	A27								
		SIU Byte,Bit	8,7	9,0	9,1	9,2								
		SIU Input #	Opto In 1	Opto In 2	Opto In 3	Opto In 4								
		2070 Input #	46	14	47	45								
		2070 Port	6.7	2.7	6.6	6.8								
		Function	Flsh Sen	MCE	Int Adv	S T								
2	Upper	SIU Pin	A5	A6	A7	A8	A9	A10	A11	A12	A13	A14	A15	A16
		SIU Byte,Bit	2,6	3,0	3.2	3,4	3,6	4,0	4,2	4,4	4,6	5,0	5,2	5,4
		SIU Input #	7	9	11	13	15	17	19	21	23	25	27	29
		2070 Input #	16	1	29	9	18	7	44	54	49	33	36	15
		2070 Port	3.1	1.2	4.6	2.2	3.3	1.8	6.5	7.7	7.2	5.2	5.5	2.8
		Function	Ph 5 Det	Ph 6 Det	Ph 6 Det	Ph 6 Det	Ph 7 Det	Ph 8 Det	Ph 8 Det	Sp Det 3	Sp Det 7	Pd 6 Det	Pre 3	Spare 1
		Field Term	TB-3 1,2	TB-3 5,6	TB-3 9,10	TB-5 1,2	TB-5 5,6	TB-5 9,10	TB-7 1,2	TB-7 5,6	TB-7 9,10	TB-8 7,9	TB-9 4,6	TB-8 1,3
	Lower	SIU Pin	B5	B6	B7	B8	B9	B10	B11	B12	B13	B14	B15	B16
		SIU Byte,Bit	2,7	3,1	3,3	3,5	3,7	4.1	4,3	4,5	4,7	5,1	5,3	5,5
		SIU Input #	8	10	12	14	16	18	20	22	24	26	28	30
		2070 Input #	20	5	42	18	3	31	11	55	50	35	37	40
		2070 Port	3.5	1.6	6.3	3.3	1.4	4.8	2.4	7.8	7.3	5.4	5.6	6.1
		Function	Ph 5 Det	Ph 6 Det	Ph 6 Det	Ph 7 Det	Ph 8 Det	Ph 8 Det	Ph 8 Det	Sp Det 4	Sp Det 8	Pd 8 Det	Pre 4	Spare 2
		Field Term	TB-3 3,4	TB-3 7,8	TB-3 11,12	TB-5 3,4	TB-5 7,8	TB-5 11,12	TB-7 3,4	TB-7 7,8	TB-7 11,12	TB-8-8,9	TB-9 7,9	TB-8 2,3
	Opto Inputs	SIU Pin	B25	A26	B26	A27								
		SIU Byte,Bit	8,7	9,0	9,1	9,2								
		SIU Input #	Opto In 1	Opto In 2	Opto In 3	Opto In 4								
		2070 Input #	NA	NA	NA	NA								
		2070 Port												
		Function												

Table 925 – 14 Required Surge Arrestors for Model 342 ITS Cabinet		
Field Terminal Block	**Terminals**	**Required Arrestors for Model 342 Cabinet**
TB - 8	1-12	Section 925.2.05.A.10.f
TB - 9	10-12	Section 925.2.05.A.10.f
TB - 9	4-9	Section 925.2.05.A.10.f
TB - 2, TB - 3, TB - 4, TB - 5, TB - 6, TB - 7	1-12	Section 925.2.05.A.10.c

Table 925 - 15 Model 342 & 346 ITS Cabinet Default Output File Assignment Detail

	Switch Pack													
Item	**1**	**2**	**3**	**4**	**5**	**6**	**7**	**8**	**9**	**10**	**11**	**12**	**13**	**14**
SIU Pin	A2	B3	A5	B6	A8	B9	A11	B12	A14	B15	A17	B18	A20	B21
SIU Byte, Bit	2,0	2,3	2,6	3,1	3,4	3,7	4,2	4,5	5,0	5,3	5,6	6,1	6,4	6,7
SIU Output #	1	4	7	10	13	16	19	22	25	28	31	34	37	40
2070 Output #	13	10	8	5	2	0	29	26	24	21	18	16	53	50
2070 Output Port	2.6	2.3	2.1	1.6	1.3	1.1	4.6	4.3	4.1	3.6	3.3	3.1	7.6	7.3
AMU Pin	C16	C17	C18	C19	C20	C21	C22	C23	C24	C25	C26	C27	C28	C29
AMU Channel	1	2	3	4	5	6	7	8	9	10	11	12	13	14
Field Term	TR-1 1,2	TR-2 1,2	TR-3 1,2	TR-4 1,2	TR-5 1,2	TR-6 1,2	TR-7 1,2	TR-8 1,2	TR-9 1,2	TR-10 1,2	TR-11 1,2	TR-12 1,2	TR-13 1,2	TR-14 1,2
Function	Ph 1 Rd	Ph 2 Rd	Pd 2 DW	Ph 3 Rd	Ph 4 Rd	Pd 4 DW	Ph 5 Rd	Ph 6 Rd	Pd 6 DW	Ph 7 Rd	Ph 8 Rd	Pd 8 DW	Ov A Rd	Ov B Rd
SIU Pin	B2	A4	B5	A7	B8	A10	B11	A13	B14	A16	B17	A19	B20	A22
SIU Byte, Bit	2,1	2,4	2,7	3,2	3,5	4,0	4,3	4,6	5,1	5,4	5,7	6,2	6,5	7,0
SIU Output #	2	5	8	11	14	17	20	23	26	29	32	35	38	41
2070 Output #	14	11	32	6	3	34	30	27	33	22	19	35	54	51
2070 Output Port	2.7	2.4	5.1	1.7	1.4	5.3	4.7	4.4	5.2	3.7	3.4	5.4	7.7	7.4
AMU Pin	B16	B17	B18	B19	B20	B21	B22	B23	B24	B25	B26	B27	B28	B29
AMU Channel	1	2	3	4	5	6	7	8	9	10	11	12	13	14
Field Term	TR-1 3,4	TR-2 3,4	TR-3 3,4	TR-4 3,4	TR-5 3,4	TR-6 3,4	TR-7 3,4	TR-8 3,4	TR-9 3,4	TR-10 3,4	TR-11 3,4	TR-12 3,4	TR-13 3,4	TR-14 3,4
Function	Ph 1 Yel	Ph 2 Yel	Pd 2 PC	Ph 3 Yel	Ph 4 Yel	Pd 4 PC	Ph 5 Yel	Ph 6 Yel	Pd 6 PC	Ph 7 Yel	Ph 8 Yel	Pd 8 PC	Ov A Yel	Ov B Yel
SIU Pin	A3	B4	A6	B7	A9	B10	A12	B13	A15	B16	A18	B19	A21	B22
SIU Byte, Bit	2,2	2,5	3,0	3,3	3,6	4,1	4,4	4,7	5,2	5,5	6,0	6,3	6,6	7,1
SIU Output #	3	6	9	12	15	18	21	24	27	30	33	36	39	42
2070 Output #	15	12	9	7	4	1	31	28	25	23	20	17	55	52
2070 Output Port	2.8	2.5	2.2	1.8	1.5	1.2	4.8	4.5	4.2	3.8	3.5	3.2	7.8	7.5
AMU Pin	A16	A17	A18	A19	A20	C21	C22	C23	A24	A25	A26	A27	A28	A29
AMU Channel	1	2	3	4	5	6	7	8	9	10	11	12	13	14
Field Term	TR-1 5,6	TR-2 5,6	TR-3 5,6	TR-4 5,6	TR-5 5,6	TR-6 5,6	TR-7 5,6	TR-8 5,6	TR-9 5,6	TR-10 5,6	TR-115,6	TR-12 5,6	TR-13 5,6	TR-14 5,6
Function	Ph 1 Grn	Ph 2 Grn	Pd 2 W	Ph 3 Grn	Ph 4 Grn	Pd 4 W	Ph 5 Grn	Ph 6 Grn	Pd 6 W	Ph 7 Grn	Ph 8 Grn	Pd 8 W	O A Grn	O B Grn

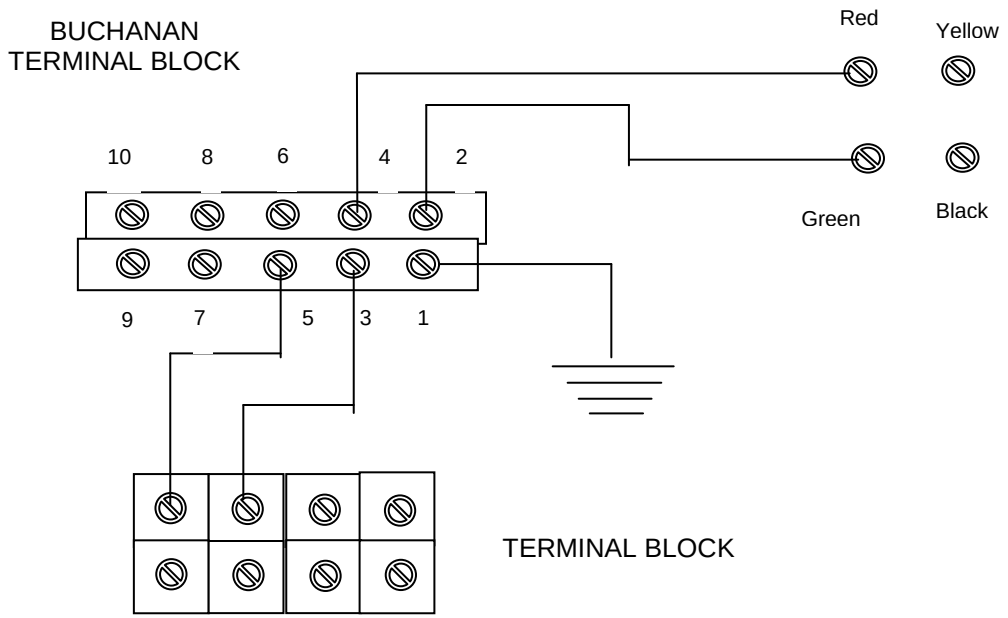

Note: For a typical signal installation, the Model 342 cabinet is the design standard.

Figure 925-3—Wiring Diagram for Dial-up Communications

Table 925 - 16 Model 346 ITS Cabinet Default Input Files Assignment Detail

Input File	Channel	Item	File Slot 1	2	3	4	5	6	7	8	9	10	11	12
1	Upper	SIU Pin	A5	A6	A7	A8	A9	A10	A11	A12	A13	A14	A15	A16
		SIU Port	2,6	3,0	3.2	3,4	3,6	4,0	4,2	4,4	4,6	5,0	5,2	5,4
		SIU In #	7	9	11	13	15	17	19	21	23	25	27	29
		2070 In #	17	0	19	2	16	1	18	3	12	36	32	33
		2070 Port	3.2	1.1	3.4	1.3	3.1	1.2	3.3	1.4	2.5	5.5	5.1	5.2
		Function	Ph 1 Det	Ph 2 Det	Ph 3 Det	Ph 4 Det	Ph 5 Det	Ph 6 Det	Ph 7 Det	Ph 8 Det	Pre 1	Pre 3	Pd 2 Det	Pd 6 Det
		Fld Term	T-7 1,2	T-7 5,6	T-7 9,10	T-8 1,2	T-8 5,6	T-8 9,10	T-9 1,2	T-9 5,6	T-5 1,2	T-5 5,6	T-4 1,2	T-4 5,6
	Lower	SIU Pin	B8	B9	B10	B11	B12	B13	B14	B15	B16	B17	B18	B19
		SIU Port	2,7	3,1	3,3	3,5	3,7	4.1	4,3	4,5	4,7	5,1	5,3	5,5
		SIU In #	8	10	12	14	16	18	20	22	24	26	28	30
		2070 In #	8	4	10	6	9	5	11	7	13	37	34	35
		2070 Port	2.1	1.5	2.3	1.7	2.2	1.6	2.4	1.8	2.6	5.6	5.3	5.4
		Function	Ph 2 Det	Ph 2 Det	Ph 4 Det	Ph 4 Det	Ph 5 Det	Ph 6 Det	Ph 7 Det	Ph 8 Det	Pre 2	Pre 4	Pd 4 Det	Pd 8 Det
		Fld Term	T-7 3,4	T-7 7,8	T-7 11,12	T-8 3,4	T-8 7,8	T-8 11,12	T-9 3,4	T-9 7,8	T-5 3,4	T-5 7,8	T-4 3,4	T-4 7,8
	Opto	SIU Pin	B25	A26	B26	A27								
		SIU Port	8,7	9,0	9,1	9,2								
		SIU In #	Opto In 1	Opto In 2	Opto In 3	Opto In 4								
		2070 In #	46	14	47	45								
		2070 Port	6.7	2.7	6.6	6.8								
		Function	Flsh Sen	MCE	Int Adv	S T								

Table 925-17 Required Surge Arrestors for Model 346 ITS Cabinet

Field Terminal Block	Terminals	Required Arrestor
TB-4	1-12	Section 925.2.05.A.10.f
TB-5	1-4	Section 925.2.05.A.10.f
TB-5	5-12	Terminal Block Only Section 925.2.04.A.10.f
TB-7, TB-8, TB-9	1-12	Section 925.2.05.A.10.c

925.2.06 Battery Backup System

A. Requirements

This specification is for establishing the minimum requirements for a complete emergency battery backup system for use with Light Emitting Diode Traffic Signal Modules at intersections with 332 cabinets. The Battery Backup System (BBS) shall include, but not be limited to the following: Inverter/Charger, Power Transfer Relay, Batteries, a separate manually operated non-electric Bypass Switch and all necessary hardware and interconnect wiring. The BBS shall be capable of providing power for full run-time operation for an "LED –only" intersection (all colors: red, yellow, green and pedestrian heads) or flashing mode operation and intersection Red LED's. The BBS shall be designed for outdoor applications, in accordance with the CALTRANS TEES.

Figure 925-4 Battery Backup Block Diagram

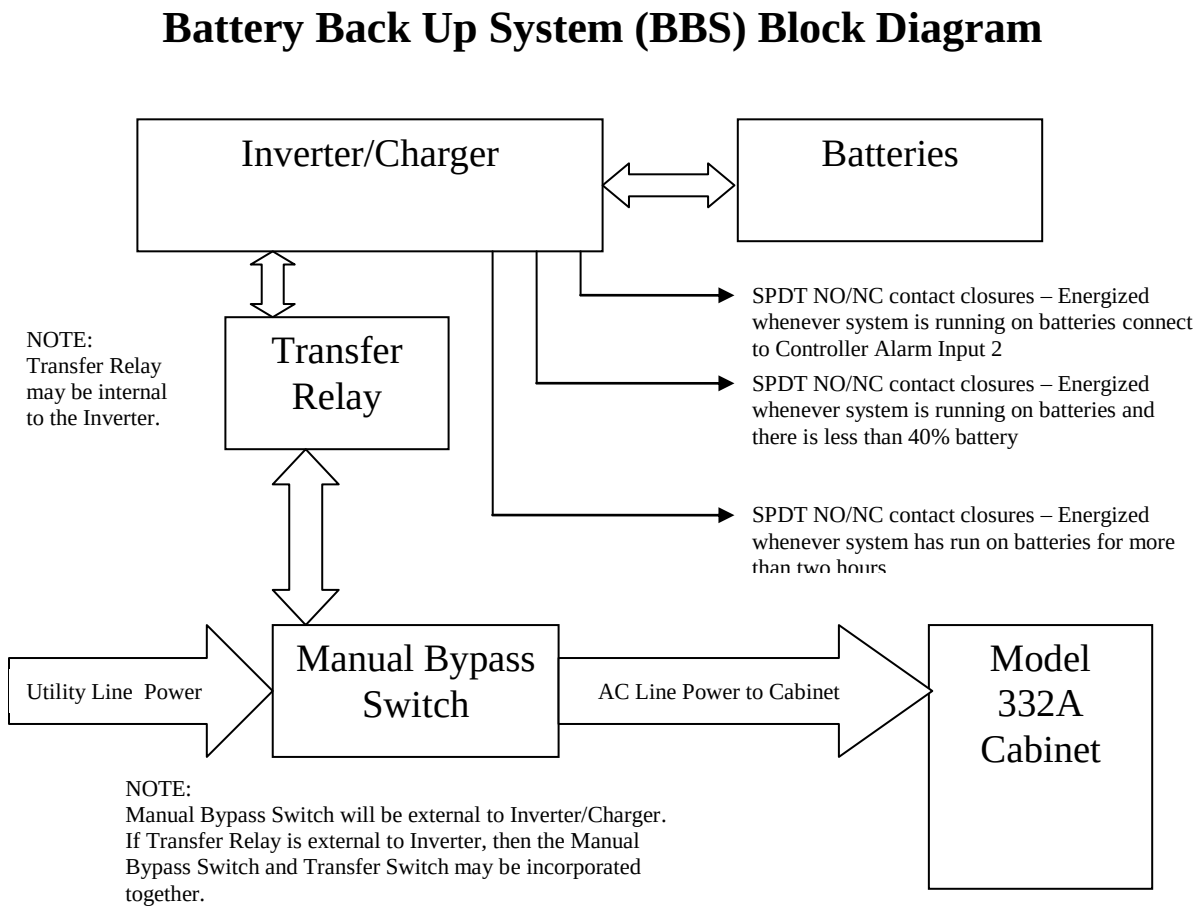

1. Operation:
   a. The BBS shall provide a minimum two (2) hours of full run-time operation for an "LED-only" intersection (minimum 700W/1000VA active output capacity, with 80% minimum inverter efficiency).
   b. The maximum transfer time allowed, from disruption of normal utility line voltage to stabilized inverter line voltage from batteries, shall be 65 milliseconds. The same maximum allowable transfer time shall also apply when switching from inverter line voltage to utility line voltage.
   c. The BBS shall include a Manual Bypass Switch which provides capability to transfer the power service to disable the BBS and operate only from the power service provided. The Manual Bypass Switch shall be as shown in Figure 925-5.

Figure 925 – 5 Manual Bypass Switch (Shown in normal BBS Mode)

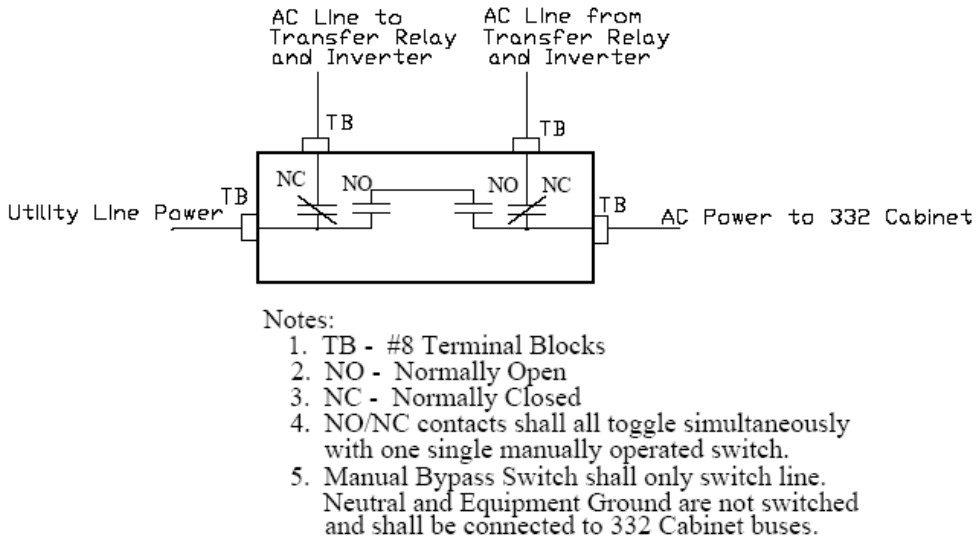

d. The BBS shall provide the user with 3-sets of normally open (NO) and normally closed (NC) single-pole double-throw (SPDT) dry relay contact closures, available on a panel-mounted terminal block, rated at a minimum 120V/1A, and labeled so as to identify each contact. For typical configuration, see Figure 925-6.

1) The first set of NO and NC contact closures shall be energized whenever the unit switches to battery power. Contact shall be labeled or marked “On Batt.”

2) The second set of NO and NC contact closures shall be energized whenever the battery approaches approximately 40% of remaining useful capacity. Contact shall be labeled or marked “Low Batt.”

3) The third set of NO and NC contact closures shall be energized two hours after the unit switches to battery power. Contact shall be labeled or marked “Timer.”

4) Relay contact activation shall be annunciated on the front panel via a visual indication. This can be either discreet LED, or part of LCD screen, etc.

Figure 925 – 6 Relay Contacts (NO/NC) available on panel-mounted terminal block (typ)

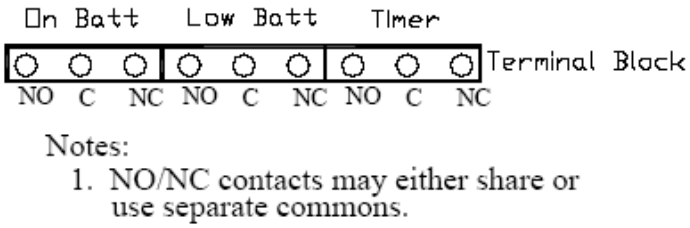

e. Operating temperature for both the inverter/charger, power transfer relay and manual bypass switch shall be –37 °C (-35F) to +74 °C (+165 F).

f. Both the Power Transfer Relay and Manual Bypass Switch shall be rated at 240VAC/30 amps, minimum

g. The BBS shall use a temperature-compensated battery charging system. The charging system shall compensate over a range of 2.5 – 4.0 mV/ °C (5-8 F) per cell. The temperature sensor shall be external to the inverter/charger unit. The temperature sensor shall come with 3 meters (10 feet) of wire. Ensure temperature sensor can be mounted to battery with ring terminal to prevent losing connectivity.

h. Batteries shall not be recharged when battery temperature exceeds 50 °C (122 F) ± 3 °C (6 F).

i. BBS shall bypass the utility line power whenever the utility line voltage is outside of the following voltage range: 100VAC to 130VAC (± 2VAC).

j. When utilizing battery power, the BBS output voltage shall be between 110 VAC and 125 VAC, pure sine wave output, ≤ 3% THD, 60Hz ± 3Hz.

k. BBS shall be compatible with CALTRANS Model 332A Cabinets, Model 170E Controllers, Model 2070 Controllers and cabinet components for full time operation.

l. In cases of low (below 98VAC) or absent utility line power, when the utility line power has been restored at above 105 VAC ± 2 VAC for more than 30 seconds, the BBS shall transfer from battery backed inverter mode back to utility line mode.

m. In cases of high utility line power (above 132VAC), when the utility line power has been restored at below 125VAC ± 2 VAC for more than 30 seconds, the BBS shall transfer from battery backed inverter mode back to utility line mode

n. BBS shall be equipped to prevent a malfunction feedback to the cabinet or from feeding back to the utility service.

o. In the event of inverter/charger failure, battery failure or complete battery discharge, the power transfer relay shall revert to the NC (and de-energized) state, where utility line power is connected to the cabinet.

p. Recharge time for the battery, from "protective low-cutoff" to 80% or more of full battery charge capacity, shall not exceed twenty (20) hours.

2. Mounting/Configuration

NOTE: All references made to EIA rail or EIA 19" (482.6mm) rack shall conform to Electronic Industries Standards EIA-310-B, Racks, Panels, and Associated Equipment, with 10-32 "Universal Spacing" threaded holes.

a. General

1) Inverter/Charger Unit shall be shelf-mounted or rack-mounted on a standard EIA 19" rack. If the inverter/charger is mounted inside the 332A Cabinet (Configuration 1), a shelf shall be provided that supports the weight of the unit.

2) Power Transfer Relay and Manual Bypass Switch shall be mounted on EIA rail.

3) All interconnect wiring shall be provided between Power Transfer Relay, Bypass Switch and Cabinet Terminal Service Block and shall be no less than 3 meters (9'10") of UL Style 1015 CSA TEW with the following characteristics:

- AWG Rating: 6 AWG
- Stranding: 133 strands of 30 AWG tinned copper
- Rating: 600 V, 105 °C, PVC Insulation

4) Relay contact wiring provided for each set of NO/NC relay contact closure terminals shall be a minimum of 3 meters (10 feet) of UL Style 1015 CSA TEW 18 AWG wire, same ratings as above, except 16 strands of 30 AWG tinned copper. Wiring shall be of adequate length for particular installation.

5) Figure 925-7 provides clarification as to how BBS Power Transfer Relay and Manual Bypass Switch are interconnected with Model 332A Cabinets in order to ensure interchangeability between all BBS manufacturers.

Figure 925- 7 BBS Utility Power Connection Diagram

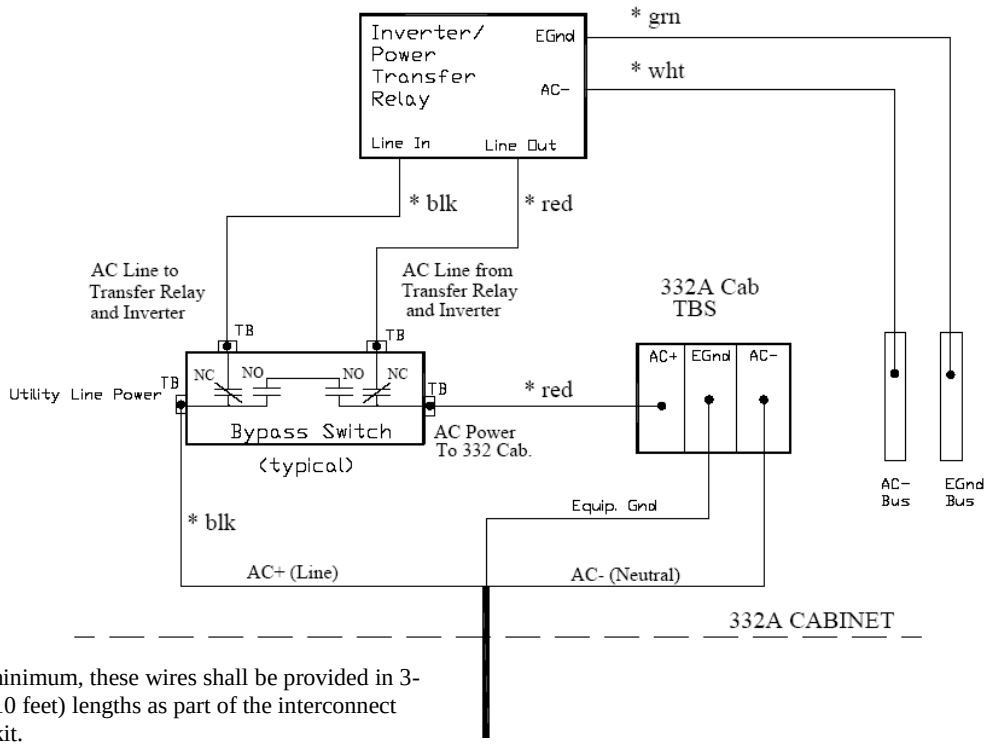

*As a minimum, these wires shall be provided in 3-meter (10 feet) lengths as part of the interconnect wiring kit.

6) All necessary hardware for mounting (shelf angles, rack, etc) shall be included in the bid price of the BBS. All bolts/fasteners and washers shall meet the following requirements:
   - Screw type: Pan Head Phillips machine screw
   - Size and Thread pitch: 10-32
   - Material: 18-8 stainless steel (Type 316 stainless steel is acceptable as an alternate)
   - Washer: Use one flat washer (18-8 stainless steel) under the head of each 10-32 screw (provided that the screws are properly tightened, lock washers are unnecessary.)
   - Number of screws per hinge bracket: Minimum of six (6) screws per hinge bracket spaced evenly along bracket, with one screw near each end.
7) There shall be two (2) basic BBS mounting options:
   a. Configuration 1 – The BBS (Inverter/Charger, Bypass Switch and Transfer Relay only) installed inside the 332A Cabinet, with the batteries installed in the externally mounted cabinet. See Figure 925-8 for location of inverter in 332A cabinet.
   b. Configuration 2 – The entire BBS, including batteries, installed inside the externally mounted cabinet.

Figure 925-8 BBS Mounting Diagram

For a typical Model 332A Cabinet

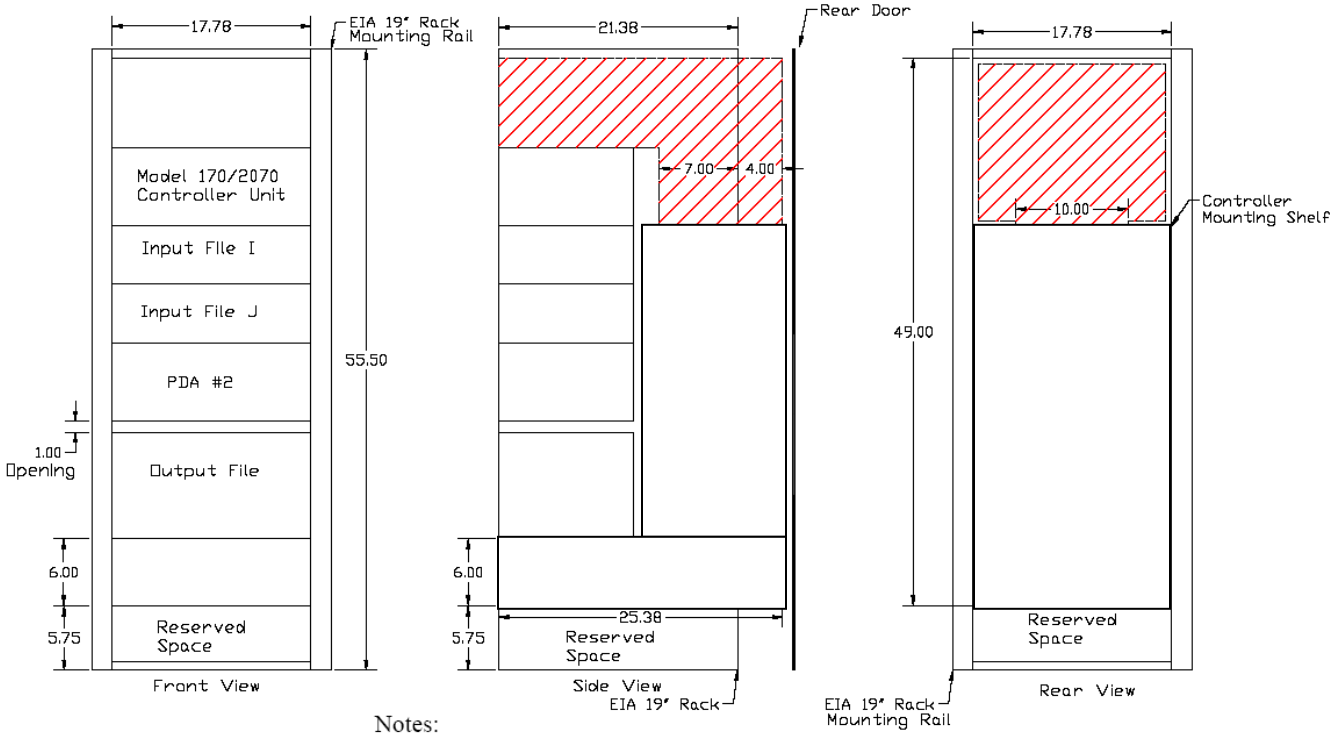

Notes:
Area inside of dashed lines represents available mounting locations for BBS.
Prescribed available mounting areas are approximate.
All dimensions shown are in inches.

8) External Cabinet
   a. The External Cabinet shall be used for housing batteries and/or BBS, which includes inverter/charger unit, power transfer relay, manually operated bypass switch, any other control panels, and all wiring and harnesses.
   b. The same Inverter/Charger, Power Transfer Relay and manually operated Bypass Switch that fits inside a typical fully equipped CALTRANS Model 332A Cabinet shall also be able to fit inside the externally mounted cabinet.

c. The External Cabinet shall be a NEMA 3R rated cabinet conforming to TEES, August 16, 2002 Chapter 7, Section 2-Housings for the construction and finish of the cabinet. The specific finish of the external cabinet shall match the finish of the 332A cabinet. Anti-Graffiti paint shall not be used. Two separate mounting installations shall be used. Refer to the project plans for the appropriate mounting installation.

- Mounting Installation Type A shall be typically used for installing at locations with existing 332 cabinet. This cabinet mounting installation shall attach the external cabinet to the side of the 332 cabinet in the relationship as shown in figure 925-9. Type A mounting installation shall use fasteners that meet the following requirements:
  - (Total of 8 bolts per cabinet with 2 flat washers per bolt and 1 K-lock nut per bolt)
  - Cabinet mounting bolts shall be:
  - 18-8 Stainless Steel Hex Head (Fully Threaded)
  - 3/8” – 16 X 1”
  - Washers shall be:
  - Designed for 3/8” bolt
  - 18-8 Stainless Steel 1” OD round flat type
  - K-lock washer shall be:
  - 18-8 Stainless Steel, Hex Nut Assembled with Free-Spinning Tooth Washer
  - 3/8” – 16 Screw size

  External Cabinet to 332A Cabinet couplings shall provide a conduit for power connections between the 332A Cabinet and External Cabinet. The couplings shall consist of three parts and meet the following requirements:
  - 2” Nylon Insulated, Steel Chase Nipple
  - 2” Sealing, Steel Locknut
  - 2” Nylon Insulated, Steel Bushing

  The external cabinet shall come provided with all bolts, washers, nuts and cabinet-cabinet coupler fittings provided, necessary for mounting the external cabinet to the 332A Cabinet.
- Mounting Installation Type B shall be typically used for locations where a new traffic controller cabinet and foundation are being installed. This cabinet installation shall provide the external battery cabinet as a base mount cabinet on the same foundation as the 332 cabinet. Connections between the cabinets shall be through conduit in the cabinet base. The external cabinet shall be installed in the same relationship as shown in Figure 925-9 to the 332 cabinet. The external cabinet shall be installed so that it is centered on the 30 inch left side of the 332 cabinet. Bolt BBS cabinet to pre-fab base. BBS cabinet opening shall be larger than the pre-fab base opening.

d. The specific dimensions and details of the external battery cabinet shall be as shown in Figures 925–10 through 925–12.

Figure 925-9 External BBS Cabinet Details

External Battery Cabinet

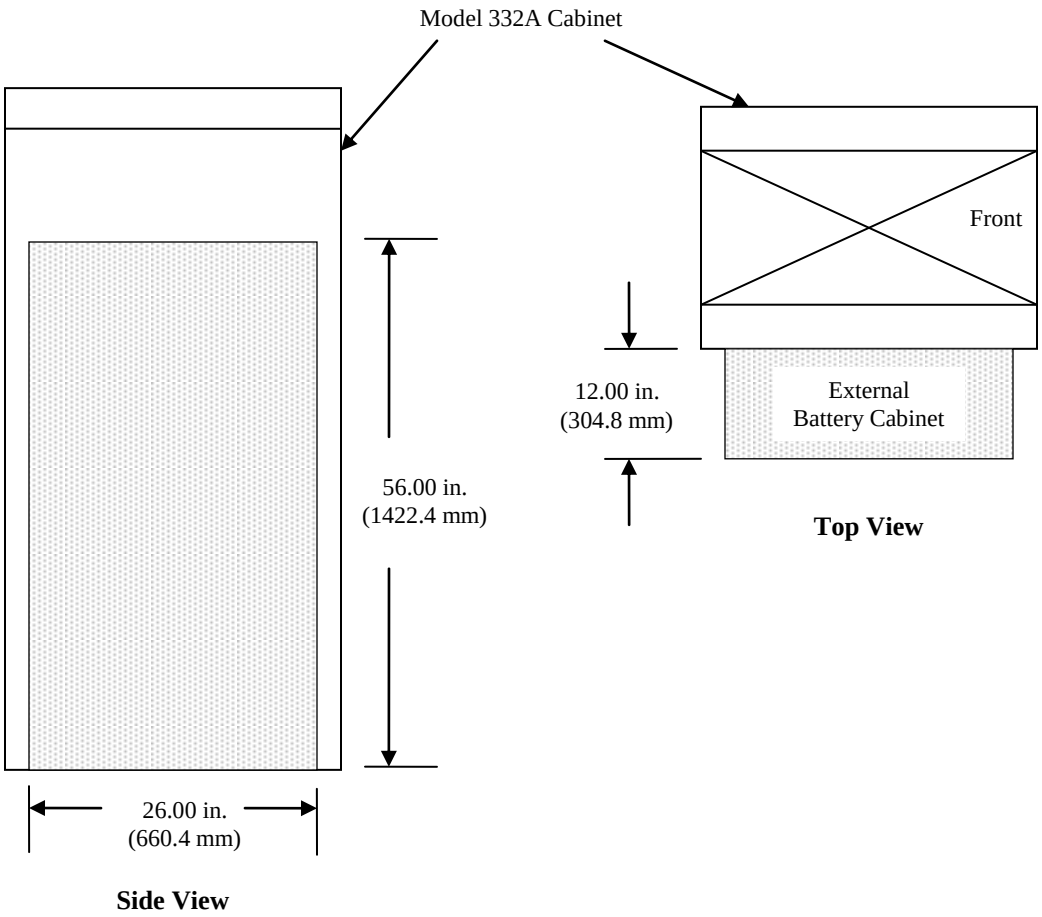

Figure 925-10 External BBS Cabinet Details

e. Four shelves shall be provided. There shall be a minimum of 304.8mm (12”) clearance between shelves. Each shelf shall be a minimum of 263.65mm (10.38”) X 635.0mm (25”), and capable of supporting a minimum of 57kg (125 lbs.). Shelf edges shall be turned down on all four sides for support and to provide a flat top surface. Shelves shall be predrilled with EIA rail mounting holes. Shelves shall provide a vertical “passageway” for wring in the rear of the cabinet on both the left and right.

f. The bottom shelf shall be capable of being removed.

Figure 925-11 EIA Rail for Mounting Inverter or PTR inside External BBS Cabinet

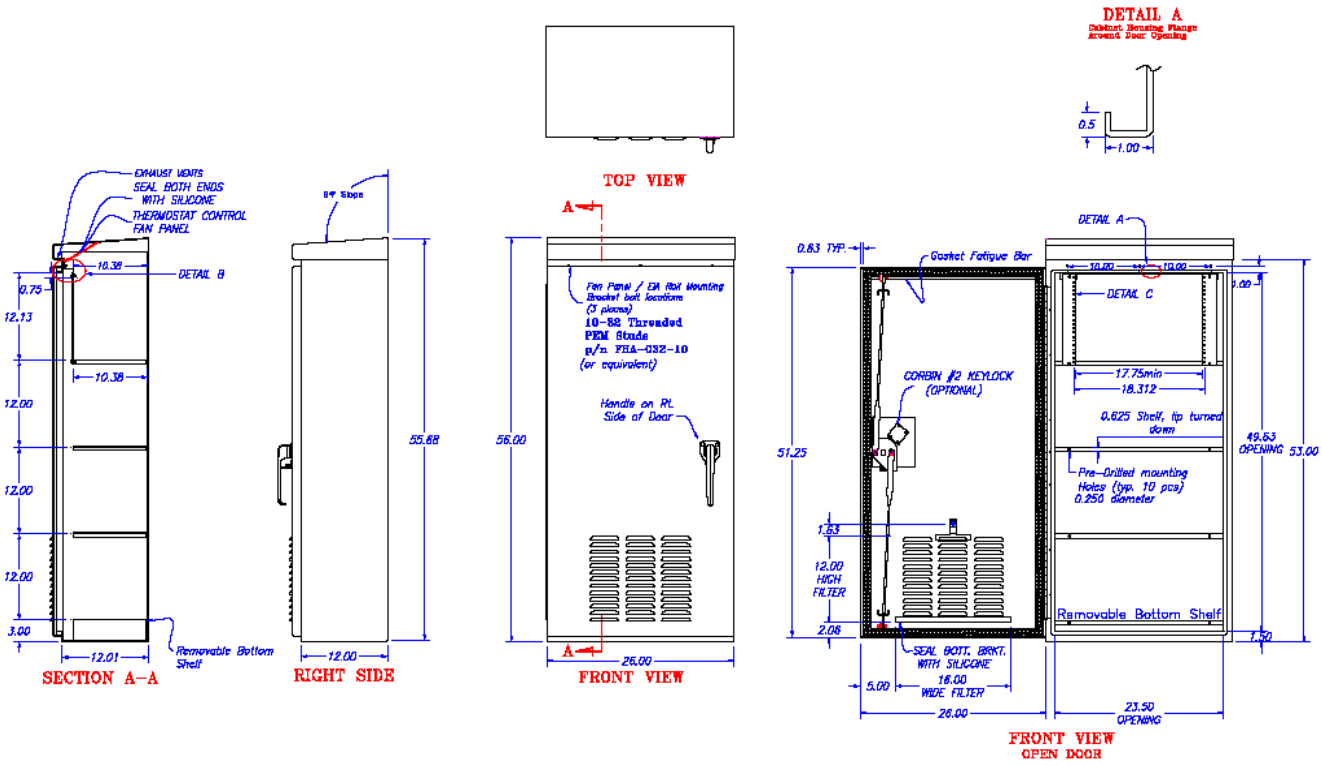

DETAIL C – EIA Angle Rail w/ EIA universal hole spacing
Refer to EIA-310-B

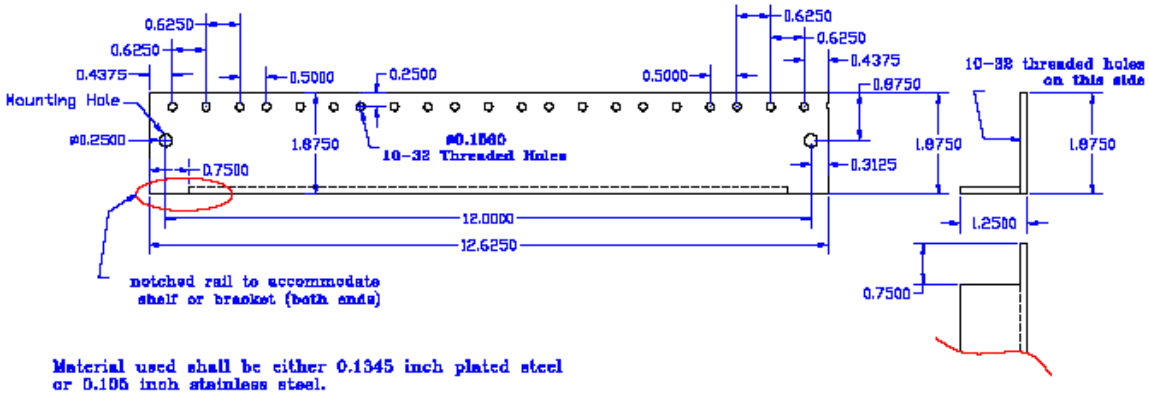

Material used shall be either 0.1345 inch plated steel or 0.105 inch stainless steel.

g. The External cabinet shall be ventilated through the use of louvered vents, filter, and one thermostatically controlled fan as per TEES Chapter 7 Section 2-Housings. The thermostat shall be accessible without removing the BBS controller.

h. External cabinet fan shall be AC operated from the same line output of the Manual Bypass Switch that supplies power to the 332 Cabinet. A 2-position terminal block shall be provided on the fan panel, along with 3 meters (10 feet) of connected hookup wire.

i. The door shall be attached to the cabinet through the use of either a continuous stainless steel piano hinge or four, two-bolts per leaf, hinges as per TEES Chapter 7 Section 2. The door shall use a padlock clasp or latch and lock mechanisms as described in the TEES, in order to lock the door.

j. Two EIA angle rails, per Detail C, Figure 925–11, along with all necessary mounting hardware (4 sets of 10-32 bolts and nuts with captive washers) shall be provided with the external cabinet (not installed). Rails shall be symmetric to allow for installation on either right or left sides of the cabinet. Mounting holes and bracket shall allow for EIA rail installation at any location in the external cabinet. The EIA mounting angle nominal thickness shall be either 0.1345 inch (3.4163mm) plated steel or 0.105 inch (2.667mm) stainless steel.

k. EIA rail mounting bracket shall be of continuous, one-piece design bolted into the cabinet to provide adequate support for rail-mounted equipment. See Figure 925–12.

l. Pressed in, flush-head threaded screw posts shall be inserted into the front face of the cabinet enclosure top sill. These threaded posts shall be used to mount both the fan panel and the EIA rail-mounting bracket. The screw posts shall be #10-32 thread size stud 0.625 inches in length. Refer to Figure 925–10, front views for mounting detail.

Figure 925–12 EIA Rail Mounting Bracket for Mounting EIA Rails inside External BBS Cabinet

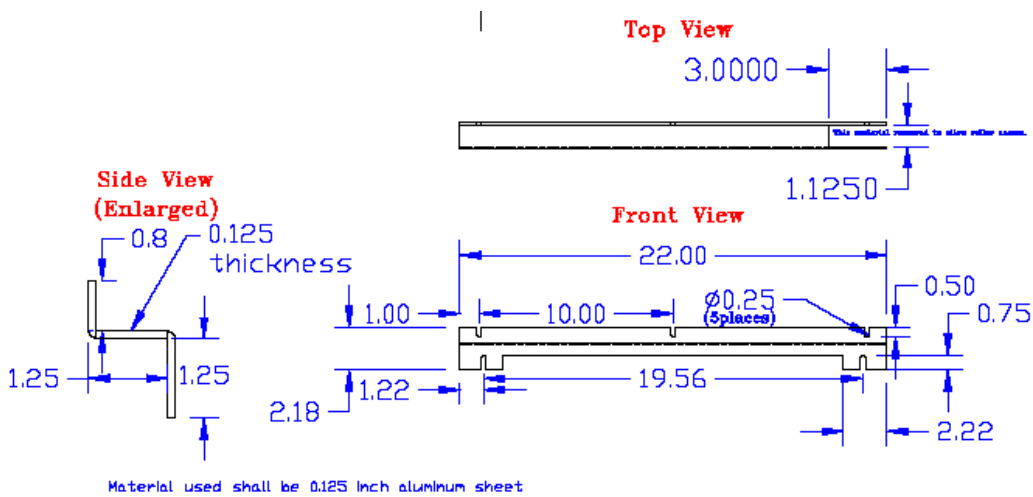

3. Maintenance, Displays, controls and Diagnostics

a. The BBS shall include a display and /or meter to indicate current battery charge status and conditions.

1) The BBS shall provide voltmeter standard probe input-jacks (+) and (-) to read the exact battery voltage drop at the inverter input.

2) The BBS shall include a 0 to 100% battery capacity LED indicator.

b. The BBS shall have lightning surge protection compliant with IEEE/ANSI C.62.41.

c. The BBS shall be equipped with an integral system to prevent battery from destructive discharge and overcharge.

d. The BBS and batteries shall be easily replaced with all needed hardware and shall not require any special tools for installation.

e. The BBS shall include a front-panel event counter display to indicate the number of times the BBS was activated and a front-panel hour meter to display the total number of hours the unit has operated on battery power. Both meters shall be resetable.

f. Manufacturer shall include a set of equipment lists, operation and maintenance manuals, and board-level schematic and wiring diagrams of the BBS, and the battery data sheets. Manual shall conform to TEES August 16, 2002, Chapter 1, Section 1.2.4.2.

4. Battery System

a. Individual batteries shall be:

1.) Voltage rating: 12V type

2.) Group size: 24 maximum

3.) Batteries shall be easily replaced and commercially available off the shelf.

b. Batteries used for BBS shall consist of 4 to 8 batteries with a cumulative minimum rated capacity of 240 amp-hours.

c. Batteries shall be deep cycle, sealed prismatic lead-calcium based AGM/VRLA (Absorbed Glass Mat/ Valve Regulated Lead Acid).

d. Batteries shall be certified by the manufacturer to operate over a temperature range of – 25 °C (-13F) to + 71°C (+160 F).

e. The batteries shall be provided with appropriate interconnect wiring and corrosion-resistant mounting trays and/or brackets appropriate for the cabinet into which they will be installed.

f. Batteries shall indicate maximum recharge data and recharging cycles.

g. Battery Harness

1) Battery interconnect wiring shall be via two-part modular harness.

2) Part I shall be equipped with red (+) and black (-) 12 inch (30.48 cm) cabling that can be permanently connected to the positive and negative posts of each battery. Each red and black pair shall be terminated into an Anderson Power Pole Connector or AMP Power Series Connector or equivalent style connector.

3) Part II shall be equipped with the mating Power Pole style connector for the batteries and a single, insulated Power Pole style connection to the inverter/charger unit. Harness shall be fully insulated and constructed to allow batteries to be quickly and easily connected in any order to ensure proper polarity and circuit configuration.

4) Power Pole style connectors may be either one-piece or two-piece. If a two-piece connector is used, a locking pin shall be used to prevent the connectors from separating.

5) The length of the battery interconnect harness (Part II) shall be a minimum of 60 inches (152.4 cm) from the Inverter/Charger plug to the first battery in the string. The lateral length of the harness between battery connectors shall be a minimum of 12 inches (30.48 cm).

6) All battery interconnect harness wiring shall be UL Style 1015 CSA TEW or Welding Style Cable or equivalent, all of proper gauge with respect to design current and with sufficient strand count for flexibility and ease of handling.

7) Battery terminals shall be covered and insulated with molded boots so as to prevent accidental shorting.

B. Fabrication

Refer to Subsection 925.2.07.A.1 for controller cabinet minimum fabrication Specifications.

C. Acceptance

General Provisions 101 through 150.

Each BBS shall be manufactured in accordance with a manufacturer Quality Assurance (QA) program. The QA program shall include two Quality Assurance procedures: (1) Design QA and (2) Production QA. The Production QA shall include statistically controlled routine tests to ensure minimum performance levels of BBS units built to meet this specification and a documented process of how problems are to be resolved. The manufacturer, or an independent testing lab hired by the manufacturer, shall perform Design Qualification Testing on new BBS system(s) offered, and when any major design change has been implemented on an existing design. A major design change is defined as any modification, material, electrical, physical or theoretical, that changes any performance characteristics of the system, or results in a different circuit configuration. Where a dispute arises in determining if a system is a new design or if the system has had a major design change, the State will make the final determination if Design Qualification Testing is required prior to production consideration.

Production Quality Control tests shall be performed on each new system prior to shipment. Failure to meet this requirements shall be cause for rejection. The manufacturer shall retain test results for seven years. Each BBS shall be given a minimum 100-hour burn-in period to eliminate any premature failures. Each system shall be visually inspected for any exterior physical damage or assembly anomalies. Any defects shall be cause for rejection.

D. Materials Warranty

Refer to Subsection 925.2.01.D for Materials Warranties. Manufacturers shall provide a two (2) year factory-repair warranty for parts and labor on the BBS from date of acceptance by the Department. Batteries shall be warranted for full replacement for two (2) years from date of purchase. The warranty shall be included in the total bid price of the BBS.

925.2.07 Flashing Beacon Assembly

A. Requirements

This specification is for a flashing signal cabinet, which consists of an aluminum cabinet containing a flasher assembly, Field connection terminal block, surge arrestor and circuit breaker wired in a manner to operate flashing beacons. Refer to Figure 925-13.

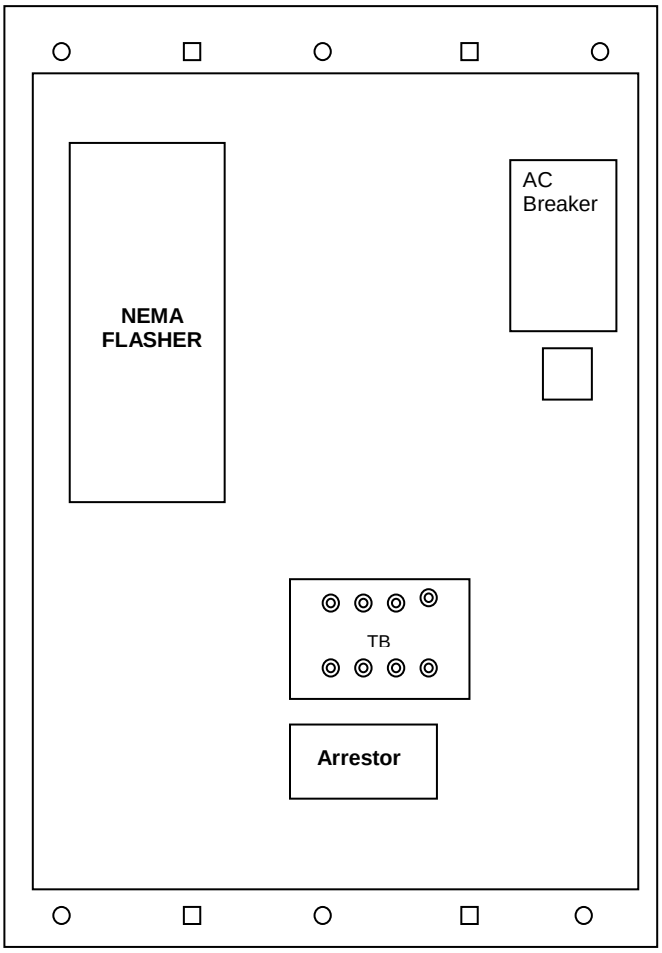

Note: Front view of cabinet Door Assembly not shown
No scale

Figure 925-13—Typical Flashing Signal Cabinet Layout

1. Cabinet

   Supply a NEMA Type 3R cabinet assembly, manufactured of aluminum with a minimum thickness of 0.125 inches (3 mm).

   Ensure that the cabinet exterior has a smooth, uniform “bare” aluminum finish with all joints between adjoining cabinet components (sides and bottom) continuously welded on the outside to prevent the intrusion of moisture and dust.

   Ensure that all welds are free of cracks, blow holes and other irregularities.

Supply a cabinet with the following exterior dimensions:

	Minimum	Maximum
Height	14 inches (350 mm)	18 inches (450 mm)
Width	10 inches (250 mm)	14 inches (350 mm)
Depth	7 inches (175 mm)	10 inches (250 mm)

Use a cabinet door that is double flanged on all four sides to prevent the entry of dirt and liquids when the door is open.

Install a one-piece gasket formed around the door opening to insure a weather tight seal when the door is secured.

Attach the door to the cabinet housing by a continuous tamper proof hinge.

Equip each cabinet with a Corbin #2 lock and one key. Police panel type locks are not acceptable.

Install an aluminum back panel in the cabinet, mounted on standoffs, to facilitate mounting of internal components.

Install exterior aluminum mounting brackets, which extend a minimum of 1.75 inches (44 mm) and a maximum of 2.5 inches (63 mm) from the top and bottom of the cabinet.

Use brackets that extend across the full width of the cabinet back on the top and bottom.

Provide these brackets with holes for mounting to a flat surface with screws and vertical slots for banding to steel, concrete or wooden signal poles.

2. Flasher Unit

   Supply a standard plug in two circuits NEMA flasher.

   Ensure that the flasher is of all solid state construction, meets the requirements of the NEMA Standards and is rated at a minimum of 10 A per circuit.

   Ensure that the flasher utilizes zero voltage turn-on and turn-off current and is capable of dimming outputs.

3. Surge Arrestor

   Supply a flasher cabinet that incorporates an AC surge arrestor to protect the internal components from lighting and over voltages on the AC service input.

   The requirements for the surge arrestor are:

Two Stage Arrestor	
Peak Surge Current	20000 A
Peak Surge Voltage @ 20KA	280 V
Clamp Voltage	280 V @ 20 kA
Continuous AC Voltage	120 V AC RMS
Response Time	<5 nsec
Operating Temp.	-40 ºF to 185 ºF (-40 ºC to 85 ºC)

4. Circuit Breaker

   Include a 15 A circuit breaker in the cabinet. The circuit breaker shall have the following characteristics.

   - Thermal Magnetic 1 pole 120/240 VAC at 50/60 Hz 15 A
   - Interrupting Rating of 10KA at 48 VDC
   - Wire Size 14 to 2 AWG
   - 35 MM Din Rail mounting

5. Terminal Block

   Include a four position terminal block in the cabinet for making field connections. Properly label all field terminal connections.

6. Construction

   Assemble the flasher assembly, terminal block, surge arrestor and circuit breaker in the cabinet as shown on the attached drawing.

   Wire all components together as a working unit, thus requiring only field connections to and from the AC power and flashing beacons.

B. Fabrication

Refer to Subsection 925.2.07.A.1 for controller cabinet minimum fabrication specifications.

C. Acceptance

General Provisions 101 through 150.

D. Materials Warranty

Refer to Subsection 925.2.01.D for Materials Warranties.

925.2.08 Flashing Signal Cabinet With Time Clock

A. Requirements

This specification is for a flashing signal cabinet with time clock which consists of an aluminum cabinet containing a flasher assembly, time clock, field connection terminal block, surge arrestor and circuit breaker wired in a manner to operate school flashing beacons. Refer to Figure 925-14.

1. Cabinet

Supply a NEMA Type 3R cabinet assembly that is manufactured of aluminum with a minimum thickness of 0.125 inches (3 mm).

Ensure that the cabinet exterior has a smooth, uniform natural aluminum finish, and that all joints between adjoining cabinet components (sides and bottom) are continuously welded on the outside to prevent the intrusion of moisture and dust.

Ensure that all welds are free of cracks, blow holes and other irregularities.

The exterior dimensions of the cabinet are as follows:

	Minimum	Maximum
Height	14 inches (350 mm)	18 inches (450 mm)
Width	10 inches (250 mm)	14 inches (350 mm)
Depth	12 inches (300 mm)	16 inches (400mm)

Supply a cabinet door that is double flanged on all four sides to prevent the entry of dirt and liquids when the door is open.

Use a one-piece gasket that is formed around the door opening to insure a weather tight seal when the door is secured.

Attach the door to the cabinet housing with a continuous tamper proof hinge.

Provide each cabinet with a Corbin #2 lock and one key. Police panel type locks are not acceptable.

Supply each cabinet with an aluminum back panel mounted on standoffs to facilitate mounting of internal components.

Supply cabinets with exterior aluminum mounting brackets, which extend a minimum of 1.75 inches (44 mm) and a maximum of 2.5 inches (63 mm) from the top and bottom of the cabinet.

Use brackets that extend across the full width of the cabinet back on the top and bottom.

Provide these brackets with holes for mounting to a flat surface with screws and vertical slots for banding to steel, concrete or wooden signal poles.

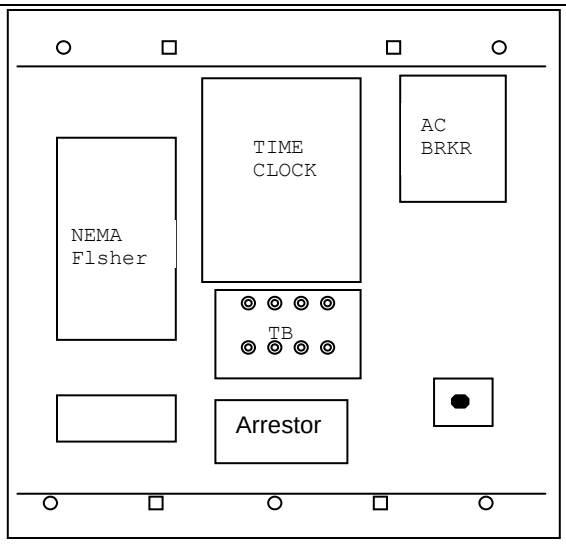

Note: Front view of cabinet Door Assembly not shown

No scale

Figure 925-14—Typical Flashing Cabinet with Time Clock Cabinet Layout

2. Flasher Unit

   Supply a standard plug in, two circuits NEMA flasher.

   Ensure that the flasher is of all solid state construction, meets the requirements of the NEMA Standards and is rated at a minimum of 10 A per circuit.

   Ensure that the flasher utilizes zero voltage turn-on and turn-off current and be capable of dimming outputs.

3. Time Switch

   Supply a time switch that meets the requirements of Subsection 925.2.09 of this specification.

4. Surge Arrestor

   Supply flasher cabinets that incorporate an AC surge arrestor to protect the internal components from lighting and over voltages on the AC service input.

   The requirements of the surge arrestor are as follows:

   Two Stage Arrestor

Peak Surge Current	20000 A
Peak Surge Voltage @ 20KA	280 V
Clamp Voltage	280 V @ 20 kA
Continuous AC Voltage	120 V AC RMS
Response Time	<5 nsec
Operating Temp.	-40 ºF to 185 ºF (-40 ºC to 85 ºC)

5. Circuit Breaker

   Include a 15 A circuit breaker in each cabinet. The circuit breaker shall have the following characteristics.

   - Thermal Magnetic 1 pole 120/240 VAC at 50/60 Hz 15 A
   - Interrupting Rating of 10KA at 48 VDC
   - Wire Size 14 to 2 AWG
   - 35 MM Din Rail mounting

6. Terminal Block

   Include a four position terminal block in each cabinet for making field connections. Properly label all field terminal connections.

7. Construction

   Assemble the flasher assembly, terminal block, surge arrestor and circuit breaker in the cabinet as shown on the attached drawing.

   Wire all components together as a working unit, thus requiring only field connections of the AC power and flashing beacons.

B. Fabrication

Refer to Subsection 925.2..07.A.1 for controller cabinet minimum fabrication Specifications.

C. Acceptance

General Provisions 101 through 150.

D. Materials Warranty

Refer to Subsection 925.2.01.D for Materials Warranties.

925.2.09 Time Clock

A. Requirements

Supply time clocks that are single circuit, calendar programmable, solid state, fully self-contained units (RTC AP 22 or Eltec TC18 or equivalent) that meet the following Specifications:

1. Alphanumeric liquid crystal display.
2. Automatic daylight savings time and leap year compensation. Changes in the daylight savings time program made through the keypad do not require hardware modification.
3. Minimum twenty-four (24) hour capacitive back up. Battery back up is not acceptable.
4. Keypad entry programming without the use of any external devices such as a PC, external programming unit, another time switch, etc.
5. Operate on 95 to 135 V AC, 60 Hz line current.
6. SPDT relay output rated at 15 A.
7. Maximum size of 4.75 inches (121 mm) wide, 10.375 inches (2636 mm) high and 2 inches (50 mm) deep.
8. A programming manual is to be included with each unit.
9. Ability to do program transfer from unit to unit. Include program transfer cable with unit.
10. Ability to run minimum six (6) different day plans and minimum twenty five (25) different annual exception plans.Temperature range of -30º F (-34º C) + 165º F (74º C).

B. Fabrication

General Provisions 101 through 150.

C. Acceptance

General Provisions 101 through 150.

D. Materials Warranty

Refer to Subsection 925.2.01.D for Materials Warranties.

925.2.10 Self Tuning Loop Detector

A. Requirements

This specification sets forth the minimum acceptable design, operational and functional performance requirements for multi-channel, inductive loop vehicle detection systems.

1. General Requirements
   a. Mounting

      Ensure that the unit is configured for rack mount insertion into a NEMA (TS l or TS 2) card rack and/or CALTRANS Type 2070 cabinet input file.

   b. Environmental

Ensure that the unit is in full compliance with the environmental tests, transient tests and size requirements of NEMA standard TS-l Section 15, TS-2 Section 6.5 and the California Type 2070 Specifications.

Provide documentation from an independent laboratory, which certifies that the unit is in compliance with the above Specifications.

c. LED Indicator

Ensure that each channel includes two high visibility LED indicators; one for the detect state and the second to indicate the status of the fault monitor.

d. Phase Indicator

Ensure that each channel has an erasable write-on pad to aid in identification of the associated phase or function.

2. Operational Requirements

a. Tuning

Supply units that are fully digital and self-tuning.

Ensure that each channel of the unit can automatically tune to any loop and lead in combination within two (2) seconds of application of power or when a reset signal is received.

Ensure that the tuning circuit is designed so that drift, caused by environmental changes or changes in applied power, does not cause false actuations.

b. Scanning

Supply units that sequentially scan each channel (only one channel energized at any given time) to eliminate crosstalk from multiple loops in adjacent lanes and/or allow overlapped loops for directional control and/or allow use of multi-conductor homerun cable when connected to the same detector unit.

c. Sensitivity Setting

Ensure that each channel is equipped with front panel selectable sensitivity settings in presence and pulse modes.

d. Frequency

Supply units that have a minimum of three switch selectable operating frequencies.

e. Inductance Range

Ensure that each channel can tune to an inductive load from 50 to 2000 microhenries with a Q factor > 5.

f. Grounded Loops

Ensure that each channel can continue to operate with poor quality loop systems (Q>2) including those that have a single point short to ground.

g. Fault Monitoring

Supply units that constantly monitor the operation of each channel.

Ensure that the unit detects shorted loops, open circuit loops or sudden changes in inductance (>25% of nominal).

Ensure that each type of fault is indicated on a fault LED by a unique sequence of flashes until the fault is rectified.

Ensure that while the channel is in the fault condition, the channel output remains in the detect state.

When the fault is rectified, the fault LED continues to emit the sequence signifying the last fault detected, but the detect LED and output returns to normal operation.

h. Failsafe Output

Ensure that each channel output generates a continuous solid state output to the controller when power to the detector is removed.

i. Operational Modes

Supply units with each channel selectable for either pulse or presence modes and that meet the following requirements:

- Pulse Mode
- This setting provides a single output pulse (125 ms +/- 25) in response to a vehicle entering the loop.

- If a vehicle remains in the sensing zone in excess of two (2) seconds, the unit "tunes out" said vehicle.
- The channel is then capable of detecting another vehicle entering the same detection zone.
- Presence Mode
- The presence hold time is a minimum of four (4) minutes for small vehicles (motorcycles) and a minimum of sixty (60) minutes for automobiles.
- Ensure that the unit tunes out of continuous peak hour traffic over long or multiple small loops as long as there is vehicle motion in the sensing zone every ten (10) minutes.

j. Resets

Ensure that the channels are manually resettable by removing the power momentarily.

Ensure that the channels reset remotely when the voltage on Pin C falls below 8 V DC for a period > l5µs, and that the unit resumes normal operation within four (4) seconds after the application of power or after a reset signal of l5µs.

k. Field Tuning

Ensure that field adjustments to the operation of the detector do not require the use of a meter, circuit changes, special software or any substitutions, modifications or additions to the unit.

3. Performance Requirements

If testing should be required, provide the Department with a test unit and/or software within ten (10) calendar days of the request.

Should the unit fail to meet the design and/or performance requirements of this specification, the unit will be rejected.

Ensure that the units meet the following requirements:

a. Capable of detecting passage, holding presence and accurately counting all types of licensed motor vehicles when connected in various loop configurations and lead-in combinations without detecting vehicles in adjacent lanes.
   - Typical Loop Configurations with Lead-in of 5 feet (1.5 m) to 1,500 feet (1000 m) are:
   - 6 feet x 6 feet (1.8 m x 1.8 m)
   - 6 feet x 20 feet (1.8 m x 6 m)
   - 6 feet x 40 feet [(1.8 m x 12 m) standard or quadrupole]

b. Capable of responding to an inductance change of 0.02% and sense vehicles at speeds of up to 80 mph (130 km/h).

c. Not detect vehicles, moving or stopped, at distances greater than three feet for any loop perimeter.

d. Detect all vehicles over multiple turn and/or multiple loops that may he connected in series, parallel or series/parallel with homerun lengths from <5 feet (1.5 m) to > 1,500 feet (1,000 m).

4. Optional Features

In addition to the requirements listed in the previous sections, the units may be requested with any combination of the following optional features:

a. Option 1- Timing Features - Delay & Extension

When this option is specified, ensure that the unit incorporates the following features:

1) Delay Timing

Minimum selectable delay time of 1 to 30 seconds in minimum 1-second increments for each channel.

2) Extension Timing

Minimum selectable extension time of 0.5 to 10 seconds in minimum 0.5-second increments for each channel.

b. Option 2 - Advanced Features

When the option for advanced features is specified, supply units that incorporate the following advanced features:

1) Serial Port Interface

When the serial port interface is specified, equip the detector with a front and rear panel RS 232 port for the transmission of data. Provide Windows 95 compatible software for interfacing with the detector.

2) PC Interface

Ensure that PC software, when connected directly to the unit through the front panel RS 232 port, provides a screen to display the following loop system operating characteristics, on a per channel basis, for system setup, data collection and diagnostics.

- Loop Status
- Loop Inductance (μH)
- Loop Frequency (kHz)
- Inductance Change (nH)
- Last Fault: Open, Shorted, >25% □L
- Fault Occurrence: Date & Time
- Vehicle Count

3) Speed, Volume & Occupancy

The software, when connected directly to the unit, is capable of collecting and storing speed, volume and occupancy data from each detector channel.

The software allows assignment of loop-to-loop distances to enable accurate speed and vehicle length measurements.

The speed volume and occupancy information is uploaded and stored in the vendor-supplied software.

Upon request, supply the necessary information/protocols to allow the Department to write custom software to retrieve speed, volume and occupancy data.

B. Fabrication

General Provisions 101 through 150.

C. Acceptance

General Provisions 101 through 150.

D. Materials Warranty

Refer to Subsection 925.2.01.D for Materials Warranties.

925.2.11 Loop Sealant

A. Requirements

Furnish and install loop sealant according to Subsection 833.2.09, "Polyurethane Sealant for Inductive Loops". For a list of sources, see QPL 75.

B. Fabrication

General Provisions 101 through 150.

C. Acceptance

General Provisions 101 through 150.

D. Materials Warranty

Refer to Subsection 925.2.01.D for Materials Warranties.

925.2.12 Vehicle Signal Heads

A. Requirements

Supply vehicle signal heads that are 12 inches (300 mm) in diameter for traffic signal control applications. For ramp metering systems supply both 12 inches (300 mm) and 8 inches (200 mm) as per the Plans.

Ensure that the 8 inch (200mm) or 12 inch (300 mm) polycarbonate vehicle signal heads meet the current ITE specification on Vehicle Traffic Control Signal Heads with the following modifications and / or clarifications:

1. Unless otherwise approved by the Engineer or as noted on the Plans, supply signal heads with the following exterior color scheme:
   - Signal Housing - Highway Yellow.
   - Front Face including Doors and Visors: Flat Black
2. Provide housing and housing door that are one piece injection molded ultraviolet and heat stabilized polycarbonate resin with the color impregnated in the material.
3. Terminate the wiring from each signal section in the top section of the head assembly. Ensure that the cable jacket is a minimum of 6 inches inside the signal head assembly.
4. Provide the appropriate Vehicle Signal LED Signal in each section either Circular or Arrow Module.
5. Provide an effective seal with the LED module to make the assembly weather tight.
6. Mount one aluminum reinforcing support plate in the top of the red section of each three and four section signal head for the installation of mounting hardware.
7. All five section heads or heads equipped with 2-way mounting hardware shall have aluminum mounting support plates installed in the top and bottom of the red section/sections for mounting hardware.
8. Install a support plate between each section of all signal heads. Place these plates such that there is a plate in the bottom of and/or top of any sections where sections adjoin to another section.
9. Provide Signal Heads that use stainless steel hardware and are weather tight. Ensure signal heads that are supplied are sealed for mounting in all possible configurations.
10. Provide Signal Heads that have housing door that “positively” latches using two eyebolts and wing nuts. Ensure the Signal door has hinge lugs molded on one side and two latch jaws are molded on the other side.
11. Provide signal heads that provide a positive method of holding the lens such that the lens does not rotate. Ensure the lens is weather tight. Lens clips which do not apply firm pressure to the lens gasket to avoid rotation are not acceptable. When constructing side by side signal sections ensure that both doors can open at the same time (butterfly). When doors are open ensure that the door will remain attached to housing. Ensure bottom section has drainage holes.

B. Fabrication

Refer to ITE Standards for material composition and finish Specifications.

C. Acceptance

Refer to ITE Standards for material composition, finish Specifications, and wind loading requirements.

D. Materials Warranty

Refer to Subsection 925.2.01.D for Materials Warranties.

925.2.13 Pedestrian Signal Head

A. Requirements

Provide each section with a visor encompassing the top and sides of the signal face of a size and shape adequate to shield the lens from external lighted sources.

An acceptable option is a “Z-crate” or louver type visor for mounting over the Pedestrian signal face.

Construct the housing of one piece cast aluminum alloy with two integrally hinge lugs, screw slots and openings at each end. Construct the door of one piece cast aluminum alloy with two hinge lugs cast on top of the door and two latch points cast on the bottom. Provide hinge pins of stainless steel to attach the door to the housing and two eye bolts and wing nuts on the other side of the door.

Ensure that the door is provided with a neoprene gasket capable of making a weather resistant, dustproof seal when closed. Supply Pedestrian signal heads with a black face and a yellow body, unless otherwise specified on the Plans.

Ensure that Pedestrian indications are distinguishable to the Pedestrian both day and night and at all distances from 10 feet (3 m) to the full width of the areas to be crossed.

Use symbols that are 12 inches (300 mm) high. Use only internal illumination.

Ensure that when illuminated, the "HAND" symbol is Portland Orange and the "PERSON" symbol is Lunar White, meeting the ITE Standards. Ensure that an opaque material obscures all areas of the face or lens, except for the message. Ensure that when not illuminated, the symbols are not to be distinguishable by Pedestrians at the far end of the crosswalk they control.

B. Fabrication

General Provisions 101 through 150.

C. Acceptance

General Provisions 101 through 150.

D. Materials Warranty

Refer to Subsection 925.2.01.D for Materials Warranties.

925.2.14 Optically Programmed Signal Head

A. Requirements

Supply signal heads that permit the visibility zone of the indication to be determined optically and require no hoods or louvers.

The projected indication may be selectively visible or veiled anywhere within 15 degrees of the optical axis.

Ensure that no indication results from external illumination and that one light unit does not illuminate a second. The components of the optical system include the lamp, lamp collar, optical limiter-diffuser, and objective lens.

Ensure that the optical system accommodates projection of diverse, selected indications to separate portions of the roadway such that only one indication will be simultaneously apparent to any viewer.

Ensure that the projected indication conforms to ITE transmittance and chromaticity Standards.

1. Construction
   a. Provide an LED Lamp Module that is a direct replacement for the incandescent lamp. Ensure the Lamp modules are on the latest CALTRANS QPL for LED Programmed Visibility Modules. Ensure the unit provided operates over the voltage range of 80 to 135 VAC and the temperature range of -40 C (-40 F) to 74 C (165 F). Provide modules that conform to the applicable portions of section 925.2.15. Ensure the unit provides a minimum luminous intensity of 500 candela and does not exceed 18 watts at 25 C (77 F).

      Couple the lamp to the diffusing element with a collar including a specular inner surface. The diffusing element may be discrete or integral with the convex surface of the optical limiter.
   b. Supply an optical limiter with an accessible imaging surface at focus on the optical axis for objects 900 to 1,200 feet (270 to 360 m) distance and permit an effective veiling mask to be variously applied as determined by the desired visibility zone.

      Ensure that the optical limiter is provided with positive indexing means and is composed of heat-resistant glass.
   c. Ensure that the objective lens is a high-resolution planar incremental lens hermetically sealed within a flat laminate of weather resistant acrylic or approved equal.

      Supply a lens that is symmetrical in outline and that may be rotated to any 90-degree orientation about the optical axis without displacing the primary image.

2. Mounting
   a. Supply signals that mount to standard 1.5 inch (38 mm) fittings as a single section, as a multiple section face, or in combination with other signals.

      Provide signal sections with an adjustable connection that permits incremental tilting from 0 to 10 degrees above or below the horizontal while maintaining a common vertical axis through couplers and mounting.

      Ensure that terminal connections permit external adjustment about the mounting axis in 5-degree increments.
   b. Ensure that the signal is mountable with ordinary tools and capable of being serviced with no tools.

      Supply attachments such as back plates or adapters that conform and readily fasten to existing mounting surfaces without affecting water and light integrity of the signal. Supply heads with tri-studs for mounting.
3. Electrical

   Supply lamp fixtures that comprise a separately accessible housing and integral lamp support indexed ceramic socket and self-aligning, quick release lamp retainer.

   Ensure that electrical connection between case and lamp housing can be accomplished with an interlock assembly, which disconnects lamp holder when opened. Include a covered terminal block for clip or screw attachment of lead wires for each signal section.

   Use concealed No. 18 AWG, stranded and coded wires to interconnect all sections to permit field connection within any section.
4. Photo Controls

   Ensure that each signal includes integral means for regulating its intensity between limits as a function of the individual background illumination.

   Ensure that lamp intensity is not less than 97% of uncontrolled intensity at 10 750 lux, and reduces to 15 + 2% of maximum at less than 10.75 lux.

   Ensure that response is proportional and essentially instantaneous to any detectable increase of illumination from darkness to 10 750 lux, and damped for any decrease from 10 750 lux.

   Ensure that the intensity controller is comprised of an integrated, directional light sensing and regulating device interposed between lamp and line wires.

   Ensure that it is compatible with 60 Hz input and responsive within the range 105 to 135 V AC.

   Output may be phase controlled, but ensure that the device provides nominal terminal impedance of 1,200 Ω open circuit and a corresponding holding current.

B. Fabrication

General Provisions 101 through 150.

C. Acceptance

General Provisions 101 through 150.

D. Materials Warranty

Refer to Subsection 925.2.01.D for Materials Warranties.

925.2.15 LED Signal Modules

A. Requirements

This specification covers Type 1 Light Emitting Diode (LED) red, green and yellow modules for vehicle signals for both Circular and Arrow indications. It also covers LED Pedestrian “HAND & PERSON” signal modules.

1. General Requirements All Modules

   Ensure that Type 1 LED signal module include a LED circuit board with LEDs and required circuit components, 36 inch (900 mm) 16 AWG wire leads with strain relief and spade terminals, a rigid housing, and a one piece neoprene gasket.

   Supply Type 1 LED signal modules that are watertight when mounted in the traffic signal housing.

   Submit life data on the LEDs from the LED Signal Module manufacturer to calculate the expected useful life.

   Supply modules with permanent markings of date of manufacture and date of installation.

Ensure that the Type 1 LED signal modules utilize the same mounting hardware that is used to secure the incandescent lens and gasket assembly.

2. Optical All Modules

Provide test data from an independent laboratory to verify that the performance of the product meets current ITE requirements.

Ensure that the individual LEDs are wired such that a catastrophic failure of one LED will result in the loss of not more than 5% of the signal module light output.

The failure of a single LED in a string or cluster of LED's causes loss of light from only that LED, not the entire string or indication.

Provide control circuitry that prevents the current flow through the LEDs in the "off" state to avoid any false indications as may be perceived by the human eye during daytime and nighttime hours.

Ensure that the LED signal module is operationally compatible with existing or new supplied conflict monitors (NEMA TS-1, NEMA TS-2, Model 210, Model 2010, ITS Cabinet CMU and AMU)..

Ensure that the LED Signal Module is operationally compatible with existing or new supplied load switches.

3. Electrical All Modules

Supply LED signal modules that operate over the temperature range of –40 ºF to 165 ºF (-40 °C to 74 ºC).

Ensure that the power factor is 90% or greater, at nominal rated voltage, at 77 ºF (25 °C), after 60 minutes of operation. Provide modules that do not exceed the maximum power consumption as shown in Table 925-18.

Table 925-18 Maximum Power Consumption (in Watts) at 25 C (77 F) & 74 C (165 F)

Vehicle Indications	**Red**		**Yellow**		**Green**	
Temperature	**25 C**	**74 C**	**25 C**	**74 C**	**25 C**	**74 C**
12 Inch (300 mm) Circular	11	17	22	25	15	15
8 Inch (200 mm) Circular	8	13	13	16	12	12
12 Inch (300 mm) Arrow	9	12	10	12	11	11
Pedestrian Indications	**Hand**				**Man**	
Temperature	**25 C**	**74 C**	**25 C**	**74 C**	**25 C**	**74 C**
12 Inch (300 mm)	10	12			9	12

Ensure that the total harmonic distortion (THD) is less than 20% at rated voltage, at 77 ºF (25 °C) and that all LED traffic signal modules are in compliance with FCC noise regulations.

Ensure that the LED signal modules operate on line voltage, 120 V AC nominal, and are able to operate over the voltage range of 80 V AC to 135 V AC. Power Supply must be integral to the module.

Provide transient voltage suppression rated at 1,500 W for 1 millisecond and fusing with a maximum rating of 2 A to minimize the effect and repair cost of an extreme over voltage situation or other failure mode.

Ensure the lens of the modules that are polymeric and are not frosted have a surface coating to provide front surface abrasion resistance. Ensure the Red and Yellow section module lens are tinted to correspond with the wavelength (chromaticity) of the LED. Ensure Green Section modules are clear.

Ensure the modules allow a reduction of the intensity of the light output in response to an input from the traffic signal controller. Ensure the minimum light output when dimmed is not less than 30% of the minimum maintained luminous intensity as defined in the applicable Signal Head Module.

4. Circular Signal Modules

Supply LED Circular Signal Modules that fit in standard incandescent vehicle traffic signal housings and meet the Performance Specification of the ITE Vehicle Traffic Control Signal Heads: LED Circular Signal Supplement. In case of conflict, this specification shall govern. Before delivery of any modules supply certification that module is to be in compliance with these specifications. In addition substantiating documentation must be supplied from an independent test laboratory to show the product has passed design qualification testing in accordance with section 6.4 of the ITE Vehicle Traffic Control Signal Heads: LED Circular Signal Supplement. Ensure the report includes a Minimum Maintained Luminous Intensity chart for the module being provided that uses the same horizontal and vertical angles as shown in Table 1 of the ITE Vehicle Traffic Control Signal Heads: LED Circular Signal Supplement. Ensure all modules are provided with a signed copy of the production and test and inspection as detailed in section 6.3 of the ITE Vehicle Traffic Control Signal Heads: LED Circular Signal Supplement.

Supply lenses for that are made of ultraviolet stabilized polycarbonate. Ensure that the external lens surface is smooth, with no raised features, to, minimize the collection of dirt, diesel smoke, and other particulate contaminates, and to facilitate periodic cleaning.

Ensure that Circular Signal Modules have prominent and permanent markings to designate the proper orientation of the signal module in the traffic signal housing. This marking should be an up arrow or the word “UP” or “TOP”.

Ensure Circular Signal Module meets the photometric requirements as indicated and described in the ITE VTCSH LED Circular Signal Supplement.

Supply Red and Yellow LEDs that utilize AllnGap technology, either AS (Absorbing Substrate or TS (Transparent Substrate) and do not exhibit degradation of more than 30% of their initial light intensity following accelerated life testing (operating at 185 F (85 C) and 85% humidity, for 1000 hours). AlGaAs technology is not acceptable.

Supply Green LEDs that utilize gallium nitride technology.

5. Vehicle Arrow Signal Modules

Supply LED Arrow Signal Modules that fit in standard incandescent vehicle traffic signal housings and meet the Performance specification of ITE Vehicle Traffic Control Signal- LED Vehicle Arrow Traffic Signal Supplement.

Ensure that Arrow Signal Modules provided are omni directional and marked as OD so that they may be rotated at any angle. Ensure the Arrow modules Photometrics support the luminous intensity as indicated in table 925-19.

Before delivery of any modules supply certification that module is to be in compliance with these specifications. In addition substantiating documentation must be supplied from an independent test laboratory to show the product has passed design qualification testing in accordance with section 6.4 of the ITE Vehicle Traffic Control Signal Heads: LED Circular Signal Supplement. Ensure the report includes a Minimum Maintained Luminous Intensity chart for the module being provided that uses the same horizontal and vertical angles as shown in Table 1 of the ITE Vehicle Traffic Control Signal Heads: LED Vehicle Arrow Traffic Signal Supplement. Ensure all modules are provided with a signed copy of the production and test and inspection as detailed in section 6.3 of the ITE Vehicle Traffic Control Signal Heads: LED Vehicle Arrow Traffic Signal Supplement.

Supply lenses for that are made of ultraviolet stabilized polycarbonate. Ensure that the external lens surface is smooth, with no raised features, to, minimize the collection of dirt, diesel smoke, and other particulate contaminates, and to facilitate periodic cleaning. Supply Red and Yellow LEDs that utilize AllnGap technology, either AS (Absorbing Substrate or TS (Transparent Substrate) and do not exhibit degradation of more than 30% of their initial light intensity following accelerated life testing (operating at 185° F (85° C) and 85% humidity, for 1000 hours). AlGaAs technology is not acceptable.

Supply Green LEDs that utilize gallium nitride technology.

Supply LED Arrow Signal Modules that fit in standard incandescent vehicle traffic signal housings and meet the “ITE Vehicle Traffic Control Signal Heads Part 3: Light Emitting Diode (LED) Vehicle Traffic Signal Modules”. Use Table 925-19 for all references to minimum maintained Intensity values. Ensure the LED arrow modules meet the required luminous intensity as shown in Table 925-19.

Table 925-19 Minimum Maintained Luminous Intensity Values for Arrow LED Indications

Angle					Angle				
Ver	Hor	12 inch (300 mm)			Ver	Hor	12 inch (300 mm)		
+	+ or -	Red	Yellow	Green	-	+ or -	Red	Yellow	Green
2.5	2.5	56.8	141.6	73.9	2.5	2.5	56.8	141.6	73.9
	7.5	47	117.1	61.1		7.5	47	117.1	61.1
	12.5	32.1	80.1	41.8		12.5	32.1	80.1	41.8
	17.5	18.2	45.3	23.7		17.5	18.2	45.3	23.7
	22.5	8.5	21.2	11.1		22.5	8.5	21.2	11.1
	27.5	3.3	8.2	4.3		27.5	3.3	8.2	4.3
7.5	2.5	47	117.1	61.1	7.5	2.5	47	117.1	61.1
	7.5	38.9	97	50.6		7.5	38.9	97	50.6
	12.5	26.7	66.5	34.7		12.5	26.7	66.5	34.7
	17.5	15.1	37.7	19.7		17.5	15.1	37.7	19.7
	22.5	7.1	17.7	9.2		22.5	7.1	17.7	9.2
	27.5	2.8	6.9	3.6		27.5	2.8	6.9	3.6
12.5	2.5	32.1	80.1	41.8	12.5	2.5	32.1	80.1	41.8
	7.5	26.7	66.5	34.7		7.5	26.7	66.5	34.7
	12.5	18.3	45.7	23.9		12.5	18.3	45.7	23.9
	17.5	10.5	26.1	13.6		17.5	10.5	26.1	13.6
	22.5	5.0	12.4	6.4		22.5	5.0	12.4	6.4
	27.5	-	-	-		27.5	-	-	-
17.5	2.5	18.2	45.3	23.7	17.5	2.5	18.2	45.3	23.7
	7.5	15.1	37.7	19.7		7.5	15.1	37.7	19.7
	12.5	10.5	26.1	13.6		12.5	10.5	26.1	13.6
	17.5	6.0	15.0	7.8		17.5	6.0	15.0	7.8
	22.5	2.9	7.2	3.8		22.5	2.9	7.2	3.8
	27.5	-	-	-		27.5	-	-	-
22.5	2.5	8.5	21.2	11.1	22.5	2.5	8.5	21.2	11.1
	7.5	7.1	17.7	9.2		7.5	7.1	17.7	9.2
	12.5	5.0	12.4	6.4		12.5	5.0	12.4	6.4
	17.5	2.9	7.2	2.8		17.5	2.9	7.2	2.8
	22.5	-	-	-		22.5	-	-	-
	27.5	-	-	-		27.5	-	-	-
27.5	2.5	3.3	8.2	4.3	27.5	2.5	3.3	8.2	4.3
	7.5	2.8	6.9	3.6		7.5	2.8	6.9	3.6
	12.5	-	-	-		12.5	-	-	-
	17.5	-	-	-		17.5	-	-	-
	22.5	-	-	-		22.5	-	-	-
	27.5	-	-	-		27.5	-	-	-

6. Pedestrian Signal Modules

   Supply LED Pedestrian Traffic Signal Modules that fit in standard pedestrian one section signal head manufactured in accordance with the ITE Pedestrian Traffic Control Signal Indications (PTCSI) housings and meet the ITE Pedestrian Traffic Signal Modules specification.

   Ensure that the Pedestrian Indications for the “Hand” and “Man” are filled in so as to provide a solid indication. Do not supply Pedestrian Indications for the Hand and Man that are “outlines”.

   Ensure that Pedestrian Signal Modules have prominent and permanent markings to designate the proper orientation of the signal module in the pedestrian signal housing. This marking should be an up arrow or the word “UP” or “TOP”.

Ensure Pedestrian Signal Module meets the photometric requirements as indicated and described in the ITE PTCSI LED Pedestrian Traffic Signal Module Specification.

Supply Portland Orange LEDs that utilize AllnGap technology, either AS (Absorbing Substrate or TS (Transparent Substrate) and do not exhibit degradation of more than 30% of their initial light intensity following accelerated life testing (operating at 185° F (85° C) and 85% humidity, for 1000 hours). AlGaAs technology is not acceptable.

Supply White LEDs that utilize InGaN technology.

B. Fabrication

General Provisions 101 through 150.

C. Acceptance

General Provisions 101 through 150.

D. Materials Warranty

Ensure that LED traffic signal modules and LED Pedestrian modules are performance warranted to be in compliance with the minimum intensity values as shown in Table 925-19. Provide independent laboratory test results indicating that LED indications satisfy the minimum intensity Standards for LED traffic signal modules, measured at 120 V AC and 165 ºF (74 °C), for a period of five (5) years.

Ensure that the manufacturer's name, part number, date code, and electrical characteristics of the LED signal module is visible on the assembly, and that each LED signal module is identified for warranty purposes.

925.2.16 LED Pedestrian and Countdown Signal Module

A. Requirements

This specification covers LED traffic signal module designed as a retrofit replacement for the message bearing surface of nominal 16" x 18" (400 mm x 450 MM) traffic signal housing built to the PTSCI Standard. The message bearing surface of the module consists of an overlapping "Hand" and "Man" Symbols with a numerical display of numbers from 00 to 99.

1. General Requirements

   Ensure that the unit supplied meets the applicable portions of section 925.15 of this specification.

   Ensure that the message numbers "00" to "99" are a minimum of 9 inches (228 mm) in height and consist of two rows of LEDs.

   Ensure the module fits in the Pedestrian Signal Housing without modification to the housing and requires no special tools for installation.

   Supply LED signal modules that are watertight when mounted in the traffic signal housing.

   Supply life data from the LED Signal Module manufacturer to calculate the expected useful life

   Supply modules with permanent markings for date of manufacture and date of installation.

2. Optical

   Provide test data from an independent laboratory to verify that the performance of the product meets current ITE requirements.

   Ensure that the individual LEDs are wired such that a catastrophic failure of one LED will result in the loss of not more than 5% of the signal module light output.

   The failure of a single LED in a string causes loss of light from only that LED, not the entire string or indication.

   Provide control circuitry that prevents the current flow through the LEDs in the "off" state to avoid any false indications as may be perceived by the human eye during daytime and nighttime hours.

   Ensure that the LED signal module is operationally compatible with existing or new supplied conflict monitors (NEMA TS-1, NEMA TS-2, Model 210, Model 2010, ITS Cabinet CMU and AMU.

   Ensure that the LED Signal Module is operationally compatible with existing or new supplied load switches.

   Ensure that the intensity of the LED signal module does not vary by more than 10% over the allowable voltage range as specified in the electrical section below.

   Ensure that the LED signal modules maintain not less than 90% of the required intensity, as defined by the ITE intensity Standards for LED traffic signal modules.

Ensure that each module provides an average luminous of at least 3750 candela per square meter of lighting surface for the “Hand" and 5300 candela per square meter for the Man symbol.

Ensure this over the temperature range of –40 ºF to 165 ºF (–40 ºC to + 74 ºC) at 120 V AC, when new and after four (4) years of field installation.

Provide an exterior lens which is uniform and frosted to reduce sun phantom effect.

3. Electrical

Supply LED signal modules that operate over the temperature range of –40 ºF to 165 ºF (-40 °C to 74 ºC).

Ensure that the power factor is 90% or greater, at nominal rated voltage, at 77 ºF (25 °C), after 60 minutes of operation.

Ensure that the total harmonic distortion (THD) is less than 20% at rated voltage, at 77 ºF (25 °C) and that all LED traffic signal modules are in compliance with FCC noise regulations.

Ensure that the LED signal modules operate on line voltage, 120 V AC nominal, and are able to operate over the voltage range of 80 V AC to 135 V AC.

Provide transient voltage suppression rated at 1,500 W for 1 millisecond and fusing with a maximum rating of 2 A to minimize the effect and repair cost of an extreme over voltage situation or other failure mode.

Ensure the modules allow a reduction of the intensity of the light output in response to an input from the traffic signal controller. Ensure the minimum light output when dimmed is not less than 30% of the minimum maintained luminous intensity as defined in the applicable ITE Signal Head Module.

4. Operation

Supply LED Modules which start counting when the flashing “Don’t Walk” Indication starts and will countdown to “0” when the steady “Don’t Walk” signal turns on. Ensure that the countdown numbers remain continuously illuminated through the flashing don’t walk interval. Ensure that the unit maintains a consistent countdown during a short power failure (i.e. Traffic Controller does not restart). Ensure that if Traffic Controller restarts that the countdown timer display is turned off until one full pedestrian clearance Cycle is timed. Ensure that the unit will turn off the counter if the steady Don’t Walk Display starts while the countdown timer is displaying a number other than 00.

B. Fabrication

General Provisions 101 through 150.

C. Acceptance

General Provisions 101 through 150.

D. Materials Warranty

Ensure that LED traffic signal modules and LED Pedestrian modules are performance warranted to be in compliance with the latest ITE and CALTRANS minimum intensity Standards for LED traffic signal modules, measured at 120 V AC and 165 ºF (74 °C), for a period of five (5) years.

Ensure that the manufacturer’s name, part number, date code, and electrical characteristics of the LED signal module is visible on the assembly, and that each LED signal module is identified for warranty purposes.

925.2.17 Blank-Out Signs

A. Requirements

Ensure that each sign provides a clearly visible and definable legend for 500 feet with ample safety factors.

Provide hardware to mount the sign on standard 1.5 inch (38 mm) pipe brackets or to mount directly to signal mast arms or span wire or as outlined in the Plans.

Ensure LED blank-out signs conform to the requirements of section 925.2.15 for LED modules and optical requirements.

Supply blank-out signs with face dimensions of 36 inches x 36 inches (900 mm x 900 mm) for multi lane applications, and 24 inches x 24 inches (600 mm x 600 mm) for single lane applications.

Supply blank-out signs capable of displaying one message at a time in one direction.

1. Case

   Use a case formed from aluminum extrusion F1-6-E and a special aluminum door frame angle.

   For Alloy 6063-T5, ensure that the wall is at least 0.075 inches thick and the corners and joints are at least 0.080 inches (2 mm) thick.

   Use filler arc for all welding. Ensure all hinges and fastening hardware, nuts, bolts, fasteners on the housing and internal components are stainless steel

   Use a BR-type take-apart door hinge and draw bolt. Furnish one P-15 1.5 inch (38 mm) hub on the top surface.

   Prime the entire case with zinc chromate, bake the inside with two coats of non-yellowing white, and paint the outside with two coats of highway yellow.

2. Electrical

   Ensure that all blank-out signs are LED and conform to current ITE Standards. Supply all signs with the necessary mounting hardware to provide for mounting as shown on the Plans. Provide mounting for one way or two way configurations.

   Obtain approval for messages and letter dimensions from the Engineer.

3. Sun Phantom Screen

   Attach to each sign a heavy-duty aluminum louver-type sun phantom screen covering the entire sign face. Slant the louvers down enough to eliminate the sun glare without obstructing the view of the sign face.

4. Painting

   Paint the signal surfaces, inside and out, with two coats of oven-baked enamel in addition to the primer coat. Paint the non-illuminated portions of the signal face black. Paint the housings, brackets, fittings, etc. highway yellow.

5. Lens

   Use a fabricated, three-section Plexiglas lens clear face, with or without legend, which can accept a silk-screened legend on the first surface. Provide a thickness of at least 0.31 inches (8 mm).

6. Legend

   Acceptable legends are as follows***:***

   Text:

   - NO LEFT TURN
   - NO RIGHT TURN
   - SIGNAL AHEAD
   - NO TURNS

   Symbols:

   - NO LEFT TURN SYMBOL
   - NO RIGHT TURN SYMBOL

B. Fabrication

General Provisions 101 through 150.

C. Acceptance

General Provisions 101 through 150.

D. Materials Warranty

Refer to Subsection 925.2.01.D for Materials Warranties.

925.2.18 Lane-Use Control Signal

A. Requirements

Ensure that all signals are LED and conform to current ITE Standards. Supply all signals with the necessary mounting hardware to provide for mounting as shown on the Plans. Provide mounting for one way or two way configurations.

1. General Requirements
   a. Weight

      Ensure that one-way units weigh not more than 50 pounds (23 kg) and two-way units weigh not more than 60 pounds (27 kg), regardless of messages.

   b. Color

      Ensure that the color of lane-use control signal indications is clearly visible for 0.25 mile (0.38 km) at all times under normal atmospheric conditions. Provide lane-use control signals with a visibility angle of a minimum of 60 degrees.

   c. Housing

      Ensure that the housing of each signal is polycarbonate or a one-piece corrosion resistant aluminum alloy die casting or equal and meets current related ASTM Specifications.

      Ensure that all configurations are balanced to provide a plumb hanging unit. Ensure that all components are readily and easily accessible from the open door.

   d. Housing door

      Ensure that the housing door is one-piece corrosion resistant aluminum or polycarbonate and meets current related ASTM Specifications.

      Provide two substantial door hinges with stainless steel hinge pins. Ensure hinges are on the left side of each section with a latch boss on the right side.

      Provide stainless steel dual eye bolt latches or similar approved devices to securely close and latch the housing door. Equip the housing or door with a continuous molded neoprene gasket to make the interior of the unit dustproof and waterproof.

   e. Wiring

      Provide each signal housing with a complete terminal board. Ensure that one side of terminal strip accommodates socket leads and the other side accommodates field wires. Ensure that the terminal board provides totally separate wiring of each symbol.

      Ensure each lamp is separately wired to a terminal block located in each housing. Provide each lamp holder socket with color-coded leads.

      For combination symbols, color-code socket leads separately to distinguish between red “X”, yellow “X” or downward arrow symbols. Provide leads that are No. 14 AWG type THW, 600 V AC, and fixture wire with 194 ºF (90 °C) thermoplastic insulation.

   f. Visors

      Provide visors not less than 12 inches (300 mm) long for multiple unit and 7 inches (175 mm) long for single unit signals for each signal face.

      Ensure that the visors are constructed of sheet aluminum or polycarbonate and encompass the top and sides of each section.

   g. Painting

      Paint all signal surfaces, inside and out, with two coats of oven baked enamel in addition to the primer coat. Paint the insides of the visors flat black.

      The non-illuminated portions of the signal face black or dark gray and all housings, brackets and fittings highway yellow.

   h. Hardware and fittings:

      Supply all necessary fittings, pipe brackets, hangers, hubs, etc. for the type of mounting specified. Ensure all fittings are aluminum or galvanized coated to prevent rust and corrosion.

   i. Sun -phantom screen

      Provide each signal face with a screen, which substantially counteracts sun phantom effect.

2. Signal Display

   Ensure that the symbols, which are on an opaque black or dark gray background, meet ITE requirements and are blacked out when not illuminated.

3. LED Optical System
   a. Ensure that the LEDs supplied for the lane use control signal meet the Specifications for a type module as required in section 925.2.14. Ensure that each separate color indication in a sign face is illuminated by independent LEDs
   b. Ensure that the green arrow indication does not utilize the same termination points as any “X" indication.
   c. Ensure that total power required for any single indication does not exceed 250 W.
   d. Ensure that all modules are contained behind a water tight signal face or lens assembly.
   e. Ensure that the entire optical system is weatherproof and is not vulnerable to extremes in temperature or moisture.

B. Fabrication

General Provisions 101 through 150.

C. Acceptance

General Provisions 101 through 150.

D. Materials Warranty

Refer to Subsection 925.2.01.D for Materials Warranties.

925.2.19 Pedestrian Push Button Station

A. Requirements

Ensure that Pedestrian push buttons are of tamperproof construction and consist of a direct push type button and single momentary contact switch in cast aluminum housing. The pushbutton cover shall also be of cast aluminum. The housing and cover shall be free of voids, pits, dents, molding sand excessive foundry grinding marks. Exterior surface shall be smooth and cosmetically acceptable, free of molding fins, cracks and other exterior blemishes.

Provide housing and cover with an alodine conversion coating so as to provide a proper base for paint adhesion. Finish the housing with baked enamel and paint the push button housing and Pedestrian heads highway yellow (unless otherwise specified by the Engineer).

The assembly shall be capable of being mounted to a flat or curved surface. Ensure the assembly includes the appropriate sign as shown in the Plan Details.

Ensure that any screws or bolts are stainless steel and vandal proof. Provide the unit with a 0.5 inch (13 mm) threaded opening with plug.

Ensure that the assembly is weatherproof and so constructed that when properly installed, it will be impossible to receive an electrical shock under any weather condition.

Ensure that Pedestrian Pushbuttons are integrated with a sign as shown in the standard details. Provide the sign size as indicated on the Plans. GDOT will allow an adapter of cast aluminum. GDOT will allow one of three options:

1. The use of a 9 inch (229 mm) by 15 inch (381 mm) cast aluminum plate adapter to upgrade existing push button station, 9 inch (229 mm) by 12 inch (305 mm).
2. Push button station assembly 9 inch (229 mm) by 15 inch (381 mm) sign w/round pushbutton adapter.
3. The use of a 9 inch (229 mm) by 15 inch (381 mm) cast aluminum plate adapter to upgrade existing push button station, 5 inch (127 mm) by 7 inch (178 mm).

Ensure that the Pedestrian Push Button sign adapter plate is, die-cast aluminum and separate, such that it is interchangeable.

Ensure that the Pedestrian Push Button sign adapter assembly be, die-cast aluminum and attached, prior to shipping.

The plate shall be finished with highway yellow baked enamel paint (unless otherwise specified by the Engineer).

Ensure the button assembly is configured to be a mechanical switch with ball and 2 inch (50 mm) mushroom plunger.

B. Fabrication

General Provisions 101 through 150.

C. Acceptance

General Provisions 101 through 150.

D. Materials Warranty

Refer to Subsection 925.2.01D for Materials Warranties.

925.2.20 Signal Head Back Plate

A. Requirements

Ensure that each back plate is designed to properly shield a traffic signal head from background distractions for better visibility.

Design the back plates to extend beyond the signal head to a minimum of 6 inches (150 mm) on all sides and have all corners rounded with minimum 2 inch (50 mm) radii.

Construct the back plates from~~,~~ UV stabilized polycarbonate or, ABS plastic material with a finished color of flat black. Ensure that polycarbonate back plates are at least 0.15 inches (4 mm) thick; ABS back plates are at least 0.05 inches (1 mm) thick.

Design the back plates with predrilled holes to provide for simple attachment to the specified brand, size and configuration of traffic signal head with all mounting hardware included.

Ensure that the back plates do not interfere with the signal mounting hardware. Ensure that the back plates include louvers.

Ensure back plates project a rectangular appearance at night by having a minimum 2 inch (50 mm) and maximum 3 inch (75 mm) yellow retroreflective strip along the back plate perimeter.

B. Fabrication

General Provisions 101 through 150.

C. Acceptance

General Provisions 101 through 150.

D. Materials Warranty

Refer to Subsection 925.2.01.D for Materials Warranties.

925.2.21 Signal Head Visors

A. Requirements

Typically, visors are one piece tunnel type and removable unless specified otherwise in the signal Plans.

Ensure that visors are polycarbonate and at least 9 inches (225 mm) deep for 12 inch (300 mm) heads. Special angle visors are full circle with the long side at least 18 inches (450 mm) deep. Ensure that visors provide a positive method of attaching to the door of the signal head that do not allow rotation. An acceptable method is to provide tabs that use stainless steel screws.

Unless otherwise specified by the Engineer, provide black signal head visors.

If special tools are required for visor adjustment, provide one set per project. Coordinate delivery of tools with District Signal Engineer.

B. Fabrication

General Provisions 101 through 150.

C. Acceptance

General Provisions 101 through 150.

D. Materials Warranty

Refer to Subsection 925.2.01.D for Materials Warranties.

925.2.22 Signal Head Louvers

A. Requirements

Ensure that louvers (with the vanes oriented vertically) are directional with a 7-degree cutoff right of center. Rotating the louver 180 degrees will produce a 7-degree cutoff left of center.

Provide twelve-inch (300 mm) louvers with 5 vanes. Finish all louvered surfaces in flat black. Ensure that programmable louvers are directional with a 7-degree cutoff and that all louver surfaces have a flat black finish.

Ensure that the units can be installed and programmed in accordance with the manufacturer's instruction on visors that are recommended by the manufacturer.

Have the programmable louver display approved by the Engineer prior to placing the signal in stop and go operation.

If special tools are required for louver adjustment, provide one set per project. Coordinate delivery of tools with District Signal Engineer. B. Fabrication

General Provisions 101 through 150.

C. Acceptance

General Provisions 101 through 150.

D. Materials Warranty

Refer to Subsection 925.2.01.D for Materials Warranties.

925.2.23 Hardware For Mast Arm Mounting

A. Requirements

Ensure that signal heads are rigidly mounted to the mast arm. Provide mounting hardware that is in accordance with the following:

1. Adjustability

   Ensure the mounting bracket is completely adjustable such that it allows; rotational adjustment about the bracket axis; vertical adjustment; rotational adjustment about the Mast Arm; and rotational adjustment from the vertical plane.

2. Attachment

   Ensure the bracket is provided with air-craft grade galvanized steel cables with stainless steel fastening hardware and make a minimum of two wraps around to fasten the bracket to the arm. Ensure the bracket is easily adjustable to fit all sizes of round, elliptical or other shaped structure without special tools or equipment.

3. Signal/Sign Accommodations

   Ensure the bracket attaches to the signal or sign to assure maximum rigidity. When clamping the signal top and bottom, ensure a standard bracket accommodates all major signal manufacturers signal for 3, 4 and 5 section signal head configurations.

4. Wiring

   All electrical wiring shall be completely concealed with the bracket. The vertical support shall be a gusseted "C" shaped extruded aluminum tube to accommodate the signal cable regardless of vertical positioning of the tube.

5. Materials

   The upper and lower arms shall be cast 319 aluminum or equivalent. The lower arm shall be internally threaded to accommodate the threaded vertical support tube. Ensure the lower arm is furnished with plastic covers which slide and snap into place. Both arms shall have 72 tooth serrations cast into the arm to assure a positive lock with signal housing and shall be secured about their rotational axis with setscrews. Ensure the arms have a tri-bolt arrangement for attachment to the signal housing.

   Ensure the vertical support is gusseted tube extruded from 6063-T6 aluminum. Ensure the tube includes a vinyl closure strip.

Ensure the mast arm clamp assembly is cast from 713 aluminum alloy or equivalent. Provide an assembly that allows for 360 degrees of rotation with no internal bracing obstructing the center opening. Provide two air-craft grade galvanized steel cables that have minimum tensile strength of 100,000 PSI (690 MPa).

Ensure that each bracket is complete with all necessary bolt, washers, gaskets and miscellaneous items to allow assembly of the signal to the bracket and the bracket to the mast arm. Ensure all aluminum parts have an Aldine finish. All non stainless steel parts shall have a yellow zinc di-chromate or galvanize finish.

This item will be approved upon submittal of catalog cuts. Refer to Standard Detail Drawings for additional information.

B. Fabrication

General Provisions 101 through 150.

C. Acceptance

General Provisions 101 through 150.

D. Materials Warranty

Refer to Subsection 925.2.01D for Materials Warranties.

925.2.24 Hardware For Signal Head Pole Mounting

A. Requirements

Ensure this item consists of hardware adequate for the specific mounting. As a minimum provide the following hardware. 1 ½ inch pipe nipples of die cast aluminum that are a minimum of 12 inches (300 mm) and threaded with 1 ½ inch NPS threads on either end. On the upper and lower arm there shall be a serrated 72 tooth boss with set screw. Use a tri-stud adaptor to attach the signal housing to the mounting hardware. The upper arm shall have a neoprene gasket to provide weather tight fit. Hub plates for pole mounting shall be provided and they shall be appropriate for the particular mounting (round or flat). Hardware shall die cast aluminum alloy 380 or extruded. All die cast parts shall be cleaned in an alkaline cleaning compound Extruded parts shall have an alodine conversion coating to provide proper base for paint adhesion. The assembly is to be painted federal yellow and baked in an oven. Ensure the assembly is provided with all required hardware. All other hardware shall be stainless steel.

B. Fabrication

General Provisions 101 through 150.

C. Acceptance

Ensure that this item consists of hardware as shown in the standard details.

This item will be approved upon submittal of catalog cuts.

D. Materials Warranty

Refer to Subsection 925.2.01.D for Materials Warranties.

925.2.25 Balance Adjuster

A. Requirements

Ensure this item consists of hardware that is cast from 316 Stainless Steel or 65-45-12 Ductile Iron or equivalent. Ensure castings are free of voids, pits, dents, molding sand and excessive grinding marks. Exterior surface shall be cosmetically acceptable and free of molding fins, cracks and other exterior blemishes. All hardware shall be supplied and be stainless steel or galvanized.

B. Fabrication

General Provisions 101 through 150.

C. Acceptance

Ensure this item consists of hardware as shown in the Standard Details. This item will be approved upon submittal of catalog cuts.

D. Materials Warranty

Refer to Subsection 925.2.01.D for Materials Warranties.

925.2.26 Hardware For Mounting 12 Inch (300 mm) Pedestrian Head

A. Requirements

Ensure this item meets the same criteria as 925.2.24.A and is in accordance with the Standard Details.

B. Fabrication

General Provisions 101 through 150.

C. Acceptance

Ensure this item consists of hardware as shown in the Standard Details. This item will be approved upon submittal of catalog cuts.

D. Materials Warranty

Refer to Subsection 925.2.01.D for Materials Warranties.

925.2.27 Pedestal Pole

A. Requirements

The Pedestal poles support vehicle signal heads, pedestrian signal heads, IVDS and push button. Furnish Pedestal poles according to type and overall length.

Pedestal pole for vehicle display for one lane ramp metering operation shall be constructed to support one 12” (300 mm) signal head and one 8” (200 mm) signal head assembly as shown in the Plans.

Pedestal pole for ramp meter advance warning sign and flashing beacon shall be constructed to meet the sign manufacturer’s structural requirements. Pedestal pole mounting adapter shall rigidly attach to the sign case’s structural bracing. Cable entrance to the sign case shall be through the inside of the pole.

1. Ensure that all poles are made of one continuous piece of bare finish spun aluminum from top to base connection for the entire height of the pole.

   The shaft, of appropriate shape, may or may not be uniformly tapered from butt to tip. A pole used to support only a traffic signal may be tapered.
2. Fabricate pole caps, when required, of cast material, and secure in place with set-screws.

B. Fabrication

General Provisions 101 through 150.

C. Acceptance

General Provisions 101 through 150.

D. Materials Warranty

Refer to Subsection 925.2.01.D for Materials Warranties.

925.2.28 Pedestal Pole Base

A. Requirements

Ensure that all design radii are smooth and intact. Ensure that the exterior surface finish is smooth and cosmetically acceptable by being free of molding fins, cracks and other exterior blemishes.

Fabricate from new aluminum ingot. Do not use scrap materials.

Minimum requirements are as follows:

ALUMINUM ALLOY NO.	319
ELONGATION [% IN 2 IN. (50 mm)]	2.5
TENSILE STRENGTH, KSI (MPa)	34 (234)
BRINELL HARDNESS	85
YEILD STRENGTH, KSI (MPa)	19 (131)
SHEAR STRENGTH, KSI (MPa)	232 (1600)

1. Ensure this item consists of square cast aluminum with bare finish, and has a minimum weight of 21 pounds (9.5 kg). Thread the upper end to receive a 4 inch (100 mm) National Pipe Thread (NPT) pipe shaft.
2. Design the base so that it may be fastened to a foundation with four (4) 0.75 inch (19 mm) anchor bolts located 90 degrees apart on the bottom of the base. Provide slots in the bottom of the base 1.5 inch (38 mm) wide and 2.5 inches (63 mm) long measured along the circumference of the bolt circle, allowing a proper fit even if the bolts are placed slightly off center.
3. Design the base to accommodate bolt circles of a minimum of 12 inches (300 mm) through a maximum of 14.5 inches (363 mm) and anchor bolts with a minimum of 0.63 inches (16 mm) through 1 inch (25 mm) diameter.
4. Design the base with a removable plastic door. Ensure that the door opening is free of burrs and sharp edges and is no less that 8.5 inches (213 mm) square. Attach the door to the base using one socket button head screw to prevent unauthorized entry.
5. Ensure that the base meets or exceeds current AASHTO breakaway requirements. Provide test reports from an FHWA approved independent laboratory certifying that the base has been tested and meets all applicable requirements. In addition, supply a statement of certification from the FHWA stating such tests have been accepted and approved.
6. In order to prove structural soundness, provide a certification from a recognized independent structural laboratory certifying that the base will withstand a bending moment of 10,750 ft-lbs (14 575 N-m).
7. Ensure that the door is injection molded from ABS plastic to deter vandalism and theft, and has the following properties:

TEST	ASTM METHOD	VALUE
Tensile @ Yield [0.13 inches (3 mm)]	D638	6600 psi (45 500 kPa)
Flexural @ Yield	D790	11,000 psi (75 850 kPa)
Rockwell Hardness	D785	101 (R Scale)
Notched Izod	D256	5 ft-lb./in. (0.03 N-m/mm)

8. Ensure that the door exhibits the following properties:
   - Has an edge thickness of 0.25 inches (6 mm) and a minimum thickness of 0.156 inches (4 mm)
   - Contains flame-retardant material, meeting or exceeding underwriters laboratories UL 94 test H.B
   - Gray aluminum tone in color, unless otherwise specified
   - Contains ultra-violet inhibitors and stabilizers for protection against UV degradation
   - Is injection molded with a smooth front finish
   - Has flat and straight surfaces without blisters, buckling or warping; have reinforcing ribs
   - Contains two (2) injection molded lugs on the bottom of the door with slots of the proper width and depth to fit the base door opening.
9. Supply the base with a set of four (4) anchor bolts, 0.75 inch (19 mm) diameter by 18 inches (450 mm) in length, material per ASTM A 572A 572M, Galvanized per ASTM A 153/A 153M. Supply (1) hex nut and (1) flat washer with each bolt.

B. Fabrication

General Provisions 101 through 150.

C. Acceptance

General Provisions 101 through 150.

D. Materials Warranty

General Provisions 101 through 150.

925.2.29 Pedestal Pole Foundation Anchor Assembly

A. Requirements

Provide Foundation Anchor assembly that is 4 inches (100 mm) in diameter by 56 inches (1400 mm) with a single helical blade and a square fixed baseplate with combination underside holt-head retainer and dirt scrappers allowing flush- mount with the ground.

Provide Baseplate that is steel and conforms to ASTM A-36 material. Provide pipe with helical blade that is manufactured from ASTM A-53ERW Grade B Steel. Ensure 4 inch pipe has 2 inch (50 mm) by 3 inch (75mm) entrance hole 18 inches below the steel plate. Ensure the anchor assembly is hot dipped galvanized finish after fabrication and complies with ASTM A-123.

Ensure base plate has four slotted mounting holes to fit bolt circles from 7 ¾ inch (195mm) to 14 ¾ inch (375 mm. Provide 4 slotted mounting hole with a ¾ inch keyhole slot to permit bolt installation and replacement from the top surface without digging under the baseplate.

Ensure assembly is furnished with;

- Quantity of four ¾ inch(20 mm) -10NC x 3 inch(75 mm) square head galvanized ASTM 325 anchor bolts;
- Quantity of four ¾ inch(20 mm) plain flat galvanized washers;
- Quantity of four 3/16 inch(5 mm) thick galvanized plate washers;
- And, quantity of four ¾ inch (20 mm) galvanized hex nuts.

B. Fabrication

General Provisions 101 through 150.

C. Acceptance

General Provisions 101 through 150.

D. Materials Warranty

Refer to Subsection 925.2.01.D for Materials Warranties.

925.2.30 Timber Poles

A. Requirements

Ensure that all timber poles meet the requirements of Section 861. Poles must be inspected and tested by the GDOT Office of Materials and Research and hammer stamped by the inspector.

Ensure that all poles have a brand or stamp 10 feet (3 m) from the butt that notes the type wood, date of manufacture, manufacturer, class and length.

Ensure that all timber poles that have guy attachments or support span wire or arms that suspend signal heads over the roadway or sidewalk are Class II.

Poles that support loop lead-in, messenger or communications cable that does not have guy attachments may be Class IV size.

Ensure that all poles meet the requirements in the table below unless otherwise noted on the traffic signal Plans or list of materials.

Minimum Circumference		
Class	Nominal Length, ft (m)	At 6 feet (2.4 m) from butt, in. (mm)
II	30 (9)	34.0 (850)
II	35 (10.5)	36.5 (913)
II	40 (12)	38.5 (963)
II	45 (13.5)	40.5 (1013)
II	50 (15)	42.0 (1050)
IV	30 (9)	29.5 (738)
IV	35 (10.5)	31.5 (788)
IV	40 (12)	33.5 (838)
IV	45 (13.5)	35.0 (875)

B. Fabrication

General Provisions 101 through 150.

C. Acceptance

General Provisions 101 through 150.

D. Materials Warranty

Refer to Subsection 925.2.01.D for Materials Warranties.

925.2.31 Traffic Signal Pull Box

A. Requirements

Ensure traffic signal pull boxes are matched assemblies consisting of boxes and covers from the same manufacturer.

For all pull boxes except Types 4 and 5, use pull boxes manufactured in a single unit for the full depth required in the size in an open bottom configuration. Do not use stacked pull boxes.

For pull boxes Types 4 and 5, use stacked pull boxes as shown in the Plans, where the top unit is open bottom and the bottom unit is closed bottom manufacture. In the bottom unit provide a drain hole.

Provide pull boxes that are non-metalic and gray or tan color.

Ensure that pull boxes meet all requirements of ANSI 77 2002 Tier 15. Provide compliance test documentation.

Provide a ¼-inch (6 mm) galvanized wire mesh between the gravel base and the open bottom box or closed bottom box drain hole for all pull box types.

Use Type 1 pull boxes [12 inches x 12 inches (300 mm x 300 mm)] for loop lead-ins. When loop lead-ins and splices and other cables are required, use Type 2 pull boxes [11 inches x 18 inches (275 mm x 450 mm)] or Type 3 pull boxes [17 inches x 30 inches (425 mm x 750 mm)]. Use Type 4, 4S, 5, 5S, 6 and 7 pull boxes for fiber optic cable. Furnish one-piece covers for all pull boxes except Types 5, 5S, and 7. Furnish two-piece covers for Types 5, 5S, and 7.

Furnish covers with a skid-resistant surface with a minimum coefficient of friction of 0.5 when tested in accordance with ASTM C1028.

Furnish covers with stainless steel hold-down bolts, minimum size 3/8-16.

Furnish covers with the logo “TRAFFIC SIGNAL” for pull box Types 1, 2 and 3, and with other pull box types when installed for traffic signal cabling at a traffic signal.

Unless otherwise shown in the Plans or installed for traffic signal cabling at a traffic signal, furnish covers with the logo “GDOT COMMUNICATIONS” for pull box Types 4, 4S, 5, 5S, 6 and 7.

Furnish pull box Types 4, 5, 6 and 7 with factory-installed cable racks and rack hooks.

Cable racks and rack hooks shall be hot-dipped galvanized steel.

Each cable rack rail shall be minimum 24 inches (600 mm) in length with rack hook mounting holes on the entire length. Install two racks on each of the pull box long side walls. For Type 4 and 5 pull boxes only, each cable rack rail may be comprised of two minimum 12 inch (300 mm) units installed on the stacked box side walls.

Mount cable racks to the side walls using minimum 3/8-16 stainless steel hardware.

Furnish a minimum of four rack hooks, minimum 6 inch length (150 mm), per pull box. Furnish an additional four rack hooks for each through cable stored in the pull box. Furnish an additional two rack hooks for each splice closure stored in the pull box.

Furnish Types 6 and 7 pull boxes with factory-installed non-metallic conduit terminators for Sch. 40 and SDR11 2-inch (53 mm) of the quantity and location as shown in the Plans, or for a different conduit size if shown in the Plans. Terminator bodies shall be manufactured from high-impact polystyrene or approved equivalent.

When joining conduits of dissimilar materials, furnish an airtight and watertight conduit adhesive intended for direct-contact underground use.

Refer to the Standard Detail Drawings and the Traffic Signal Design Manual for further information.

B. Fabrication

General Provisions 101 through 150.

C. Acceptance

General Provisions 101 through 150.

D. Materials Warranty

Refer to Subsection 925.2.01.D for Materials Warranties.

925.2.32 Prefabricated Controller Cabinet Base

A. Requirements

Provide controller cabinet bases that are precast polymer concrete and grey in color. Ensure the prefabricated controller cabinet base has the correct bolt pattern for the cabinet(s) to be installed. Provide prefabricated controller cabinet bases with UNC inserts as shown on plans. UNC inserts shall be stainless steel and be designed for a minimum of 15 foot-pounds (20 N-m) of torque.

Ensure that prefabricated controller cabinet bases are designed to withstand wind loading of 125 mph (200 km/h) with the cabinets as shown in the Plans mounted. Ensure that prefabricated controller cabinet bases are designed for a minimum static vertical load of 5,000 pounds (2262 kg)over a 10 inch (254 mm) by 10 inch (254 mm) by 1 inch (25 mm) thick distribution plate and withstand a tested load of 7,500 pounds (3394 kg). Ensure that prefabricated controller cabinet bases are designed for a minimum lateral load of 1800 pounds (814 kg) over an 18 inch (457 mm) by 24 inch (610 mm) by 1 inch (25 mm) steel plate applied to the longest side and shall withstand a tested load of 2700 pounds (1222 kg). The prefabricated controller cabinet base shall withstand a 50 foot-pound impact administered with a 12-pound weight having a “C” tup without puncture or splitting, in accordance with ASTM D2444. The prefabricated controller cabinet base shall meet the requirement of ASTM D543 Section 7, Procedure 1. Provide a copy of all test reports from a certified lab along with the materials certification package.

B. Fabrication

General Provisions 101 through 150.

C. Acceptance

General Provisions 101 through 150.

D. Materials Warranty

Refer to Subsection 925.2.01.D for Materials Warranties.

925.2.33 Loop Lead-In Cable

A. Requirements

Ensure that loop detector lead-in cable is No. 18 AWG, 3-pair shielded cable that meets IMSA specification #50-2.

Ensure that identification markings are stamped on the jacket.

B. Fabrication

General Provisions 101 through 150.

C. Acceptance

General Provisions 101 through 150.

D. Materials Warranty

Refer to Subsection 925.2.01.D for Materials Warranties.

925.2.34 Loop Detector Wire

A. Requirements

Ensure that loop detector wire, meets IMSA specification 51- -3 and is 14 AWG.

For special applications loop detection wire that meets IMSA specification 51-7, 14 AWG, may be used as directed by the Engineer.

Stamp identification markings on the cable jacket.

B. Fabrication

General Provisions 101 through 150.

C. Acceptance

General Provisions 101 through 150.

D. Materials Warranty

Refer to Subsection 925.2.01.D for Materials Warranties.

925.2.35 Aerial & Duct Signal Cable

A. Requirements

Ensure that aerial or duct (conduit) No. 14 AWG, stranded, 7-conductor, with black polyethylene (PE) jacket and 600 V AC rating meets IMSA specification #20-1. Use conductors that are straight, not twisted pairs.

B. Fabrication

General Provisions 101 through 150.

C. Acceptance

General Provisions 101 through 150.

D. Materials Warranty

Refer to Subsection 925.2.01.D for Materials Warranties.

925.2.36 Self-Supporting Twisted Pair Aerial Signal Communications Cable

A. Requirements

Ensure that self-supporting, figure eight, aerial signal communications cable, No. 19 AWG, stranded 6-pair conductors is rated at 600 V AC and meet IMSA specification #20-4-1984.

Use conductors that are twisted pairs with copper tape shield under a black PE jacket. Ensure that messenger strand is 0.25 inch (6 mm), 7-strand and conforms to ASTM A 475 Siemens-Martin grade or better with a Class A coating.

B. Fabrication

General Provisions 101 through 150.

C. Acceptance

General Provisions 101 through 150.

D. Materials Warranty

Refer to Subsection 925.2.01.D for Materials Warranties.

925.2.37 Underground Feeder Cable, Type UF

A. Requirements

Ensure that underground feeder cable, Type UF w/ground has two (2) conductors with pvc/nylon jacket and a minimum 600 V AC rating per UL #493. Two-conductor, No. 6 AWG wire may be used.

B. Fabrication

General Provisions 101 through 150.

C. Acceptance

General Provisions 101 through 150.

D. Materials Warranty

Refer to Subsection 925.2.01.D for Materials Warranties.

925.2.38 Messenger & Guy Strand (Span Wire)

A. Requirements

Ensure that all messenger and guy strand (span wire) conforms to ASTM A 475 Extra High Strength grade or better with a Class A coating, 7-wire span wire.

Ensure ¼-inch (6 mm) Messenger & guy strand shall be used to support interconnect cable or as tether spans.

Messenger & guy strand 0.31 inch (7 mm) shall be used only where it is essential to match an existing 0.31inch (7 mm) span wire that will not be replaced as part of a new installation.

Ensure all span wire for signal heads, blank out sign, optically programmed heads, lane control signs, standard, aerial or sidewalk guys uses a minimum Messenger & guy strand 0.38 inch (9 mm) as a minimum size.

B. Fabrication

General Provisions 101 through 150.

C. Acceptance

General Provisions 101 through 150.

D. Materials Warranty

Refer to Subsection 925.2.01.D for Materials Warranties.

925.2.39 Power Disconnect Box

A. Requirements

Ensure that all power disconnect boxes are NEMA 3R 240 V AC, 60 Amp Phase 1(metal non-fused 2 pole). Ensure the disconnect box is supplied with a padlock keyed as per directions of District Signal Engineer. Provide power disconnect box that is not fused and does not have a circuit breaker. Supply with a service grounding kit.

B. Fabrication

General Provisions 101 through 150.

C. Acceptance

General Provisions 101 through 150.

D. Materials Warranty

Refer to Subsection 925.2.01.D for Materials Warranties.

925.2.40 Cable Ties

A. Requirements

Ensure that all cable ties are nylon, ultraviolet resistant black and consist of the following as a minimum:

Nominal Length	**8 inches (200 mm)**
Width	**0.30 inches (7 mm)**
Tensile Strength	**120 pounds (55 kg)**

B. Fabrication

General Provisions 101 through 150.

C. Acceptance

General Provisions 101 through 150.

D. Materials Warranty

Refer to Subsection 925.2.01.D for Materials Warranties.

925.2.41 Lashing Rod

A. RequirementsEnsure that all lashing rods are sized in accordance with messenger and cable(s) diameters to be supported. Provide lashing rods that are of the same material as the messenger or guy strand.

B. Fabrication

General Provisions 101 through 150.

C. Acceptance

General Provisions 101 through 150.

D. Materials Warranty

Refer to Subsection 925.2.01.D for Materials Warranties.

925.2.42 Stainless Steel Lashing Wire

A. Requirements

Provide lashing wire that is type 316 stainless steel with 0.045 inch (1 mm) diameter.

B. Fabrication

General Provisions 101 through 150.

C. Acceptance

General Provisions 101 through 150.

D. Materials Warranty

Refer to Subsection 925.2.01.D for Materials Warranties.

925.2.43 Guy Guards

A. Requirements

Ensure that all guy guards are high impact resistant PVC with ultraviolet stabilizers added for retention of color. Ensure that insulators attach to the guy so that they cannot easily be removed. Use guy guards which are yellow unless otherwise directed.

B. Fabrication

General Provisions 101 through 150.

C. Acceptance

General Provisions 101 through 150.

D. Materials Warranty

Refer to Subsection 925.2.01.D for Materials Warranties.

925.2.44 Guy Strain Insulators

A. Requirements

Ensure guy strain insulators are protected from the environment including the effects of voltage, ultraviolet rays, and acid rain by a fully bonded, electrically tack-free, and impenetrable silicone rubber sheath. Each insulator shall be UL proof tested, and permanently marked to show date of test.

B. Fabrication

General Provisions 101 through 150.

C. Acceptance

General Provisions 101 through 150.

D. Materials Warranty

Refer to Subsection 925.2.01.D for Materials Warranties.

925.2.45 Universal Closure Kit

A. Requirements

Supply a Universal Signal Closure Kit to seal the signal head at either the top or bottom. Ensure that the kit will fit any manufacturer's signal head (top or bottom) without the use of special tools or modification.

1. Ensure that the gasket is 60-70 durometer neoprene.
2. Ensure that Closure Cap is injection molded ABS plastic. The plastic is to be loaded with UV stabilizers.
3. Ensure that Adapter Bar is made so that it will secure the closure cap and compensate for varying thickness of signal heads.
4. Provide two # 10 (9mm) screws to fit any manufacturer's signal head. Ensure that one screw is 0.75 inches (19 mm) in length and the second screw is 1 inch (25 mm) in length.
5. Pack each assembly in a clear plastic bag. Mark the bag with the manufacturer's name and part number. Include the Universal Signal Closure Kit in a package containing the span wire clamp and Tri-Stud wire entrance fitting.
6. Ensure that the Closure Cap is molded to closely match the color of the signal head (Federal Yellow). The adapter bar and screws are to be zinc plated steel.

B. Fabrication

General Provisions 101 through 150.

C. Acceptance

General Provisions 101 through 150.

D. Materials Warranty

Refer to Subsection 925.2.01.D for Materials Warranties.

925.2.46 Cast Aluminum Span Wire Clamp

A. Requirements

Provide Span Wire Clamps that are cast from Aluminum Alloy 713 or equivalent, free of voids, pits, dents, molding sand and excessive foundry grinding marks. Ensure that all design radii are smooth and intact.

Provide an exterior surface finish that is smooth and cosmetically acceptable, free of molding fins, cracks and other exterior blemishes. Ensure that span wire clamps are fabricated from aluminum ingot with minimum requirements as follows:

ALUMINUM ALLOY No.	713
YIELD STRENGTH, ksi (MPa)	25 (172)
TENSILE STRENGTH, ksi (MPa)	35 (240)
BRINELL HARDNESS	75
ELONGATING [% in 2 inches (50 mm)]	3

1. Ensure that the Span Wire Clamp can accommodate cables 0.25 inch (6 mm) to 0.63 inch (16 mm) diameter.
2. Ensure that the weight is less than 1.75 pounds (0.8 kg) with hardware.
3. Ensure that the Span Wire Clamp have a minimum overall length of 7 inches (175 mm).
4. Ensure that the Span Wire Clamp have a centerline dimension from cable to clevis pin of 2 inches (50 mm) [+/- 0.5 inches (13 mm)].
5. Ensure that the Span Wire Clamp have a cast aluminum cable bar to protect the cable when tightening the U-bolts.
6. Ensure that the Span Wire Clamp have a mounting opening of 0.75 inches (19 mm) [+/- 0.03 inches (0.8 mm)].
7. Ensure that the Span Wire Clamp have 0.5 inch (13 mm) - 13 NPT U-bolts with 0.5 inch (13 mm) lock washers and nuts.
8. Ensure that the clevis pin are 0.63 inch (16 mm) diameter with a length of 2.25 inches (56 mm) and secured with a hump back stainless steel cotter pin.
9. Ensure that the Clamp and Cable Bar have an Alodine 1200 conversion coating to help resists oxidation.
10. Ensure that the Clevis Pin and hardware are galvanized per ASTM 123/A 123M or stainless steel.

B. Fabrication

General Provisions 101 through 150.

C. Acceptance

General Provisions 101 through 150.

D. Materials Warranty

Refer to Subsection 925.2.01.D for Materials Warranties.

925.2.47 Cast Aluminum Tri-Stud Span Wire Entrance Fitting

A. Requirements

Ensure that the Tri-Stud Span Wire Entrance Fittings are cast from Aluminum Alloy 713 or equivalent, free of voids, pits, dents, molding sand and excessive foundry grinding marks.

Ensure that the all design radii are smooth and intact. Ensure that the exterior surface finish is smooth and cosmetically acceptable, free of molding fin, cracks and other exterior blemishes.

Ensure that the material is fabricated from aluminum ingot with minimum requirements as follows:

ALUMINUM ALLOY No.	713
YIELD STRENGTH, ksi (MPa)	25 (172)
TENSILE STRENGTH, ksi (MPa)	35 (240)
BRINELL HARDNESS	75
ELONGATION [% in 2 inches (50 mm)]	3

1. Ensure that the Tri-Stud Span Wire Entrance fitting has a mounting support at the top of the wire entrance 0.69 inches (17 mm) thick [+/- 0.07 inches (1.5 mm)].
2. Ensure that the Tri-Stud Span Wire Entrance fitting weight is not less than 1.75 pounds (0.8 kg) with hardware.
3. Ensure that the mounting support has at least six (6) clevis openings for adjustment with suspension bracing between every two (2) openings.

4. Ensure that the Tri-Stud Span Wire Entrance has a minimum of 0.5 inch (13 mm) diameter throughout for wire access and that wire access is free of burrs and casting webs.
5. Ensure that the Wire Entrance opening is recessed and has a neoprene grommet with sealed membrane sections.
6. Ensure that the signal head attachment end is serrated and has a minimum of 3-signal head centering bosses extending 0.19 inches (5 mm) from the serrations.
7. Ensure that the serrations have a 72-tooth design to match the signal head.
8. Ensure that three (3) stainless steel studs are cast into the wire entrance fitting. Ensure that the studs are 0.31 inches (7 mm) and extend 1.5 inches (38 mm) [+/- 0.13 inches (4 mm)] beyond the serrations. Provide each Tri-Stud span wire entrance fitting with a Tri-Stud hardware kit.
9. Ensure that the Tri-Stud Span Wire Entrance Fitting has an alodine conversion coating to provide a proper base for paint adhesion. Ensure that the assembly matches display housing (per plans) and baked in a drying oven after painting.
10. Ensure that the all Hardware is galvanized or stainless steel.

B. Fabrication

General Provisions 101 through 150.

C. Acceptance

General Provisions 101 through 150.

D. Materials Warranty

Refer to Subsection 925.2.01.D for Materials Warranties.

925.2.48 Bull Rings

A. Requirements

Provide bull rings that are galvanized weldless steel 0.63 inch (16 mm) diameter. Submit catalog cuts for approval.

B. Fabrication

General Provisions 101 through 150.

C. Acceptance

General Provisions 101 through 150.

D. Materials Warranty

Refer to Subsection 925.2.01.D for Materials Warranties.

925.2.49 Ramp Meter Enforcement Device

A. Requirements

For each metered lane, provide one ramp meter enforcement device mounted on the back of one signal per lane and wired directly to the red signal display, (Refer to 647.3.05.L). This installation shall include a Red 44 LED Array (allnGaP), Pixel housing, 6061 aluminum powder coated swivel bracket, 2 inch lens, with an aluminum hood. Mounted and adjusted as per the Plans.

B. Fabrication

General Provisions 101 through 150.

C. Acceptance

General Provisions 101 through 150.

D. Materials Warranty

Refer to Subsection 925.2.01.D for Materials Warranties.

925.2.50 Vinyl Electrical Tape

A. Requirements

Ensure electrical tape used is flame retardant, cold and weather resistant. Provide tape that is rated for 600 volts and for use between 0 F (-18 C) and 176 F (80 C).

Ensure tape is 0.0085 inches (0.2 mm) thick and meets the requirements of UL 510 and Mil-I-24391. Provide tape that remains flexible with abrasion resistance.

B. Fabrication

General Provisions 101 through 150.

C. Acceptance

General Provisions 101 through 150.

D. Materials Warranty

Refer to Subsection 925.2.01.D for Materials Warranties.