Standard Specifications
Construction of
Transportation Systems

Georgia Department of Transportation

Approved by The
State Transportation Board
April 18, 2013

Johnny Floyd
Chairman

Keith Golden, P.E.
Commissioner

Russell McMurry, P.E.
Chief Engineer

2013 Edition

Preface

The text included in Specification Sections 148, 149, and 151 through 941 is written in the imperative mood (sentences often begin with commands). All commands and references in, or in connection with, these Specifications (including all text, related documents, electronic media, graphics, or photographs) are written to imply **Contractor responsibility for action**—unless otherwise specified.

Text placed in text boxes within a Specification does not imply any greater significance than any other text in the Specification.

The Specifications contain dual units of measurement—The United States Standard Measure (English units) and the International System of Units (SI or "metric" units). The English units are expressed first with the SI (metric) units following in parentheses. The measurements expressed in the two systems of units are not necessarily equal. In most cases the measurement in SI units is a "hard" conversion of the English measurement. That is, the SI (metric) unit is a rounded, rationalized SI measurement that is easy to work with and remember.

The Proposal will designate whether the Project was designed and is to be constructed in either English units (English project) or SI units (metric project). The dimensions, measurements, and requirements stated in the system of units designated in the Proposal are the applicable Specification requirements for the Contract. All Contractor submittals shall be prepared in the designated system of units. Pay Item quantities will be measured in the designated system of units.

Georgia Department of Transportation
One Georgia Center
600 West Peachtree NW
Atlanta, Georgia 30308
(404) 631-1990 Main Office
(404) 631-1844 Fax

GDOT website www.dot.ga.gov

Table of Contents

GENERAL PROVISIONS

Section 101—Definitions and Terms ---------- 1
Section 102—Bidding Requirements and Conditions ---------- 10
Section 103—Award and Execution of Contract ---------- 16
Section 104—Scope of Work ---------- 17
Section 105—Control of Work ---------- 23
Section 106—Control of Materials ---------- 31
Section 107—Legal Regulations and Responsibility to the Public ---------- 37
Section 108—Prosecution and Progress ---------- 49
Section 109—Measurement and Payment ---------- 56
Section 148—Pilot Vehicles ---------- 67
Section 149—Construction Layout ---------- 67
Section 150—Traffic Control ---------- 72

AUXILIARY ITEMS

Section 151—Mobilization ---------- 72
Section 152—Field Laboratory Building ---------- 74
Section 153—Field Engineer's Office ---------- 78
Section 154—Construction Vibration Monitoring ---------- 84
Section 155—Insect Control ---------- 84
Section 157—Survey Aids ---------- 86
Section 158—Training Program ---------- 90

CONSTRUCTION EROSION CONTROL

Section 160—Reclamation of Material Pits and Waste Areas ---------- 93
Section 161—Control of Soil Erosion and Sedimentation ---------- 100
Section 162—Erosion Control Check Dams ---------- 100
Section 163—Miscellaneous Erosion Control Items ---------- 102
Section 165—Maintenance of Temporary Erosion and Sedimentation Control Devices ---------- 112
Section 166—Restoration or Alteration of Lakes and Ponds ---------- 118
Section 167—Water Quality Monitoring ---------- 120
Section 168—Comprehensive Monitoring Program ---------- 124
Section 170—Silt Retention Barrier ---------- 124
Section 171—Silt Fence ---------- 126

EARTHWORK

Section 172—Soil Test Boring ---------- 130
Section 201—Clearing and Grubbing Right of Way ---------- 130
Section 202—Random Clearing and Grubbing ---------- 136
Section 203—Foundation Exploration ---------- 137
Section 204—Channel Excavation ---------- 137
Section 205—Roadway Excavation ---------- 139
Section 206—Borrow Excavation ---------- 145
Section 207—Excavation and Backfill for Minor Structures ---------- 148

Section 208—Embankments ---------- 152
Section 209—Subgrade Construction ---------- 160
Section 210—Grading Complete ---------- 165
Section 211—Bridge Excavation and Backfill ---------- 167
Section 212—Granular Embankment ---------- 172
Section 213—Sand Backfill ---------- 173
Section 214—Mitigation Site Construction ---------- 174
Section 215—Removal of Solid Waste ---------- 174
Section 216—Unpaved Shoulders ---------- 178
Section 217—Removal of Underground Storage Tanks ---------- 182
Section 218—Blanket for Fill Slopes ---------- 185
Section 219—Crushed Aggregate Subbase ---------- 186
Section 221—Special Subgrade Compaction and Test Rolling ---------- 187

BASES AND SUBBASES

Section 222—Aggregate Drainage Courses ---------- 190
Section 225—Soil-Lime Construction ---------- 193
Section 228—Grading – Modified ---------- 203
Section 230—Lump Sum Construction ---------- 203
Section 231—Miscellaneous Construction, Unpaved Roads and Streets ---------- 203
Section 232—Railroad Construction ---------- 203
Section 233—Haul Roads ---------- 203
Section 300—General Specifications for Base and Subbase Courses ---------- 206
Section 301—Soil-Cement Construction ---------- 215
Section 302—Sand-Bituminous Stabilized Base Course ---------- 226
Section 303—Topsoil, Sand-Clay, or Chert Construction ---------- 232
Section 304—Soil Aggregate Construction ---------- 239
Section 305—Cement Stabilized Soil Aggregate Construction ---------- 243
Section 306—Reclaimed Liquid Stabilized Base ---------- 243
Section 307—Impermeable Membrane for Subgrades, Basins, Ditches, and Canals ---------- 243
Section 310—Graded Aggregate Construction ---------- 245
Section 311—Crushed Stone Base ---------- 250
Section 312—Crushed Rap Base ---------- 250
Section 316—Cement Stabilized Graded Aggregate Construction ---------- 250
Section 317—Reconstructed Base Course ---------- 250
Section 318—Selected Material Surface Course ---------- 254
Section 319—Lime-Fly Ash Soil Construction ---------- 257
Section 325—Stabilized Base Material for Patching ---------- 258
Section 326—Portland Cement Concrete Subbase ---------- 261
Section 327—Mining, Crushing, and Stockpiling Aggregates ---------- 266
Section 328—Foamed Asphalt Stabilized Base Course ---------- 266
Section 329—Reclaiming, Crushing And Stockpiling Of Concrete And Asphalt Pavements -------- 266

PAVEMENTS

Section 400—Hot Mix Asphaltic Concrete Construction ----------266
Section 401—Cold Mix for Patching ----------302
Section 402—Hot Mix Recycled Asphaltic Concrete ----------304
Section 403—Hot In-Place Recycled Asphaltic Concrete ----------312
Section 404—Paver-Laid Surface Treatment ----------318
Section 405—Hot Asphalt-Vulcanized Rubber Seal Treatment ----------319
Section 406—Coal Tar Emulsion Seal Coat ----------322
Section 407—Asphalt-Rubber Joint and Crack Seal ----------323
Section 408—Joint and Crack Cleaning and Seal ----------327
Section 409—Latex Modified Asphalt Concrete ----------327
Section 410—Warm Mix Recycled Asphaltic Concrete ----------327
Section 411—Asphaltic Concrete Pavement, Partial Removal ----------327
Section 412—Bituminous Prime ----------329
Section 413—Bituminous Tack Coat ----------333
Section 414—Hot Asphalt—Rubber Seal Treatment for Stress Relieving Interlayer ----------336
Section 415—Asphalt Concrete Open Graded Interlayer ----------336
Section 416—Intelligent Compaction for Asphalt Concrete ----------336
Section 417—Paver Mounted Temperature Equipment ----------336
Section 424—Bituminous Surface Treatment ----------337
Section 426—Sprinkle Overlay Treatment ----------347
Section 427—Emulsified Asphalt Slurry Seal ----------347
Section 428—Micro Surfacing ----------353
Section 429—Rumble Strips ----------361
Section 430—Portland Cement Concrete Pavement ----------362
Section 431—Grind Concrete Pavement ----------380
Section 432—Mill Asphaltic Concrete Pavement ----------383
Section 433—Reinforced Concrete Approach Slabs ----------386
Section 434—Asphalt Paved Ditches ----------388
Section 435—Rapid Setting Cement Concrete End Dams and Patches ----------391
Section 436—Asphaltic Concrete Curb ----------396
Section 437—Granite Curb ----------399
Section 438—Precast Concrete Header Curb ----------400
Section 439—Portland Cement Concrete Pavement (Special) ----------402
Section 440—Plain Portland Cement Concrete Shoulders ----------415
Section 441—Miscellaneous Concrete ----------421
Section 442—Roller Compacted Concrete Pavement ----------428
Section 443—Elastomeric Profile Bridge Joint Seals ----------428
Section 444—Sawed Joints in Existing Pavements ----------428
Section 445—Waterproofing Pavement Joints and Cracks ----------430
Section 446—Placement of Pavement Reinforcement Fabric ----------433
Section 447—Modular Expansion Joints ----------436
Section 448—Portland Cement Concrete End Dams and Patches ----------436
Section 449—Bridge Deck Joint Seals ----------436
Section 450—Pressure Grouting Portland Cement Concrete Pavement ----------445

Section 451—Patching Portland Cement Concrete Pavement (Spall Repair) ----------452
Section 452—Full Depth Slab Replacement ----------456
Section 453—Portland Cement Concrete Whitetopping ----------460
Section 455—Filter Fabric for Embankment Stabilization ----------460
Section 456—Indentation Rumble Strips ----------462
Section 457—Geogrid Reinforcement ----------464
Section 461—Sealing Roadway and Bridge Joints and Cracks ----------464

BRIDGES

Section 500—Concrete Structures ----------469
Section 501—Steel Structures ----------514
Section 502—Timber Structures ----------542
Section 503—Four Hour Accelerated Strength Concrete ----------547
Section 504—Twenty-Four Hour Accelerated Strength Concrete ----------547
Section 505—Corrugated Steel Bridge Plank ----------551
Section 506—Expanded Mortar ----------553
Section 507—Prestressed Concrete Bridge Members ----------556
Section 508—Asphalt Plank Bridge Floor ----------561
Section 509—Prestressing Concrete by Post Tensioning ----------563
Section 510—Protective Platforms ----------580
Section 511—Reinforcement Steel ----------582
Section 512—Shear Connectors ----------595
Section 513—Precast Reinforced Concrete Box Culverts Barrel Sections and End Sections ---------598
Section 514—Epoxy Coated Steel Reinforcement ----------604
Section 515—Handrail-Ferrous Metal and Pipe ----------607
Section 516—Aluminum Handrail ----------610
Section 517—Protective Concrete Collar for Existing Columns ----------613
Section 518—Raise Existing Bridge ----------613
Section 520—Piling ----------614
Section 521—Patching Concrete Bridge ----------636
Section 522—Shoring ----------636
Section 523—Dynamic Testing of Pile ----------638
Section 524—Drilled Caisson Foundations ----------638
Section 525—Cofferdams ----------638
Section 526—Steel Girder Flooring ----------642
Section 527—Bridge Rehabilitation ----------642
Section 528—Epoxy Pressure Injection of Concrete Cracks ----------642
Section 529—Navigation Lighting ----------644
Section 530—Waterproofing Fabrics ----------651
Section 531—Dampproofing ----------653
Section 533—Bridge Deck Waterproofing Membrane ----------655
Section 534—Pedestrian Overpass Bridge ----------659
Section 535—Painting Structures ----------659
Section 537—Cattle Pass ----------678
Section 538—Post-tensioned Prestressed Concrete Construction ----------678
Section 539—Inspection Traveler ----------678

Section 540—Removal of Existing Bridge ----------678
Section 541—Detour Bridges ----------681
Section 542-—Contractor Proposed Alternate to Reinforced Concrete Deck Girder ----------684
Section 543—Bridge Complete ----------689

MINOR DRAINAGE STRUCTURES

Section 544—Deck Drain System ----------692
Section 547—Pile Encasement ----------693
Section 550—Storm Drain Pipe, Pipe-Arch Culverts, and Side Drain Pipe ----------698
Section 551—Pile Protection in Earth Walls ----------706
Section 555—Tunnel Liner ----------709
Section 560—Structural Plate Pipe, Pipe-Arch and Arch Culverts ----------713
Section 561—Renovating Existing Pipe ----------716
Section 570—Minor Drainage Structures for Detours ----------719
Section 573—Underdrains ----------721
Section 574—Edgedrains ----------724
Section 576—Slope Drain Pipe ----------727
Section 577—Metal Drain Inlets ----------729

INCIDENTAL ITEMS

Section 581—Pot Bearings ----------732
Section 582—Rock Dowels ----------738
Section 590—Fiber Reinforced Polymer (FPR) Composite Material ----------738
Section 600—Controlled Low Strength Flowable Fill ----------739
Section 601—Criblock Retaining Wall ----------741
Section 603—Rip Rap ----------742
Section 607—Rubble Masonry ----------746
Section 608—Brick Masonry ----------749
Section 609—Removal of Portland Cement Concrete Roadway Slabs ----------751
Section 610—Removal of Miscellaneous Roadway Items ----------753
Section 611—Relaying, Reconstructing, or Adjusting to Grade of Misc. Roadway Structures -------757
Section 612—Construct, Maintain, and Remove Median Crossover ----------760
Section 613—Docks ----------762
Section 615—Jacking or Boring Pipe ----------764
Section 617—Permanent Anchored Walls ----------767
Section 618—Permanent Anchored Tie-Down Wall ----------783
Section 619—Permanent Anchored Slurry Diaphragm Wall ----------783
Section 620—Temporary Barrier ----------783
Section 621—Concrete Barrier ----------786
Section 623—Pneumatically Applied Concrete ----------789
Section 624—Sound Barriers ----------792
Section 625—Visual Barrier ----------803
Section 626—Mechanically Stabilized Embankment Retaining Walls ----------803
Section 627—Mechanically Stabilized Embankment Retaining Wall—Contractor Design ----------814
Section 628—Permanent Soil Nailed Wall ----------822
Section 630—Modular Block Retaining Wall System ----------822

Section 631—Permanent Changeable Message Signs ----------822
Section 632—Portable Changeable Message Signs ----------822
Section 633—Modification of Existing Signs ----------826
Section 634—Monuments and Road Markers ----------826
Section 635—Barricades ----------828
Section 636—Highway Signs ----------829
Section 637—Illuminated Sign System ----------835
Section 638—Structural Supports for Overhead Signs ----------843
Section 639—Strain Poles for Overhead Sign and Signal Assemblies ----------851
Section 640—Retroreflectorized Railroad Cross Buck Sign ----------857
Section 641—Guardrail ----------859
Section 642—Cable Barrier ----------862
Section 643—Fence ----------863
Section 645—Repair of Galvanized Coatings ----------867
Section 647—Traffic Signal Installation ----------869
Section 648—Traffic Impact Attenuator ----------901
Section 649—Concrete Glare Screen ----------904
Section 651—Raised Traffic Bars ----------906
Section 652—Painting Traffic Stripe ----------908
Section 653—Thermoplastic Traffic Stripe ----------915
Section 654—Raised Pavement Markers ----------924
Section 655—Pavement Arrow with Raised Reflectors ----------927
Section 656—Removal of Pavement Markings ----------929
Section 657— Preformed Plastic Pavement Markings ----------931
Section 658—Polyurea Traffic Stripe ----------941
Section 659—Hot Applied Preformed Plastic Pavement Markings ----------949
Section 660—Sanitary Sewers ----------952
Section 664—Electric Distribution Systems ----------952
Section 665—Gas Distribution System ----------953
Section 666—Vertical Drainage Wicks ----------953
Section 667—Horizontal Drain ----------957
Section 668—Miscellaneous Drainage Structures ----------957
Section 670—Water Distribution System ----------963
Section 676—Appurtenances for Water Systems ----------963
Section 680—Highway Lighting ----------963
Section 681—Lighting Standards and Luminaires ----------977
Section 682—Electrical Wire, Cable, And Conduit ----------979
Section 683—High Level Lighting Systems ---------- 994
Section 685—Blast Cleaning Portland Cement Concrete Structures ----------996
Section 686—Radio Tower Antenna ----------998
Section 687—Traffic Signal Timing ----------998
Section 688—Motorist Aid Call Box ----------998
Section 690—Static Scale System ----------998
Section 691—Weigh-in Motion Scale System ---------- 1004
Section 692—Automatic Vehicle Identification System, Tws ---------- 1013
Section 693—Truck Weigh Station Operations System ---------- 1013

Section 694—Weather Monitoring and Reporting System ---------- 1013
Section 695—Elevator Systems ---------- 1013
Section 700—Grassing ---------- 1014
Section 701—Wildflower Seeding ---------- 1030
Section 702—Vine, Shrub, and Tree Planting ---------- 1034
Section 703—Tree Wells, Tree Walls, and Root Protection ---------- 1047
Section 705—Transplanting Trees ---------- 1049
Section 706—Turf Establishment ---------- 1052
Section 708—Plant Topsoil ---------- 1054
Section 711—Turf Reinforcement Matting ---------- 1057
Section 712—Fiberglass Blanket ---------- 1061
Section 713—Organic And Synthetic Material Fiber Blanket ---------- 1063
Section 714—Jute Mesh Erosion Control ---------- 1067
Section 716—Erosion Control Mats (Slopes) ---------- 1069
Section 718—Wood Fiber ---------- 1071
Section 719—Silt Filter Bag ---------- 1073
Section 720—Triangular Silt Barrier ---------- 1075
Section 721—Fabric Formed Concrete Rip Rap ---------- 1077
Section 725—Weed Control ---------- 1077

BUILDING INSTALLATIONS

Section 750—Rest Room Building ---------- 1079
Section 751—Water Supply System ---------- 1079
Section 752—Pneumatic Ejector Lift Station ---------- 1079
Section 753—Waste Water Treatment Plant ---------- 1079
Section 754—Outdoor Furniture ---------- 1079
Section 755—Electrical Work ---------- 1079
Section 756—Drilled Wells ---------- 1082
Section 757—Well Pumps ---------- 1082
Section 758—Travel Trailer Sanitary Disposal Station ---------- 1082
Section 759—Water Storage Tanks ---------- 1082
Section 760—Welcome Station Building ---------- 1082
Section 761—Information Center Building ---------- 1082
Section 762—Truck Weighing Station Building ---------- 1083
Section 763—Bus Pavilion ---------- 1083
Section 765—Flag Pole ---------- 1083
Section 766—Irrigation System ---------- 1083
Section 767—Sprinkler System ---------- 1083
Section 768—Truck Weigh Station Traffic Control Signs ---------- 1083
Section 770—Truck Weigh Station Height Checking Device ---------- 1083
Section 772—Truck Weigh Station Length Estimating Device ---------- 1084
Section 774—Mobile Operations Office ---------- 1084
Section 776—Check Point Shelter ---------- 1084
Section 777—Truck Weigh Station Communications System ---------- 1084
Section 778—Solar Application ---------- 1084
Section 791—Water Intake Stucture ---------- 1084

Section 792—Display and Interior Furnishings ---------- 1084
Section 795—Vehicle Maintenance Building ---------- 1085
Section 796—Sewage Pumping Station ---------- 1085
Section 797—Buildings ---------- 1085
Section 798—Building Equipment ---------- 1085

MATERIALS

Section 800—Coarse Aggregate ---------- 1085
Section 801—Fine Aggregate ---------- 1090
Section 802—Aggregates for Asphaltic Concrete ---------- 1093
Section 803—Stabilizer Aggregate ---------- 1095
Section 804—Abrasives for Blast Cleaning ---------- 1098
Section 805—Rip Rap and Curbing Stone ---------- 1099
Section 806—Aggregate for Drainage ---------- 1102
Section 809—Geogrid Materials ---------- 1104
Section 810—Roadway Materials ---------- 1111
Section 811—Rock Embankment ---------- 1113
Section 812—Backfill Materials ---------- 1114
Section 813—Pond Sand ---------- 1117
Section 814—Soil Base Materials ---------- 1118
Section 815—Graded Aggregate ---------- 1123
Section 816—Soil Aggregate Bases ---------- 1128
Section 817—Shoulder Material ---------- 1130
Section 818—Crushed Aggregate Subbase ---------- 1131
Section 819—Fiber Stabilizing Additives ---------- 1131
Section 820—Asphalt Cement ---------- 1132
Section 821—Cutback Asphalt ---------- 1136
Section 822—Emulsified Asphalt ---------- 1138
Section 823—Cutback Asphalt Emulsion ---------- 1140
Section 824—Cationic Asphalt Emulsion ---------- 1142
Section 825—Asphalt Plank ---------- 1146
Section 826—Dampproofing or Waterproofing Material ---------- 1147
Section 828—Hot Mix Asphaltic Concrete Mixtures ---------- 1148
Section 830—Portland Cement ---------- 1157
Section 831—Admixtures ---------- 1159
Section 832—Curing Agents ---------- 1163
Section 833—Joint Fillers and Sealers ---------- 1164
Section 834—Masonry Materials ---------- 1178
Section 835—Aluminum Powder ---------- 1180
Section 836—Special Surface Coating for Concrete ---------- 1181
Section 837—Polymer Concrete ---------- 1182
Section 838—Graffiti Proof Coating for Concrete ---------- 1184
Section 839—Corrugated Polyethylene Underdrain Pipe ---------- 1185
Section 840—Corrugated Aluminum Alloy Pipe ---------- 1186
Section 841—Iron Pipe ---------- 1189
Section 842—Clay Pipe ---------- 1190

Section 843—Concrete Pipe ---------- 1190
Section 844—Steel Pipe ---------- 1193
Section 845—Smooth Lined Corrugated Polyethylene (PE) Culvert Pipe ---------- 1196
Section 846—Polyvinyl Chloride (PVC) Drain Pipe ---------- 1197
Section 847—Miscellaneous Pipe ---------- 1199
Section 848—Pipe Appurtenances ---------- 1203
Section 850—Aluminum Alloy Metals ---------- 1207
Section 851—Structural Steel ---------- 1211
Section 852—Miscellaneous Steel Materials ---------- 1211
Section 853—Reinforcement and Tensioning Steel ---------- 1219
Section 854—Castings and Forgings ---------- 1225
Section 855—Steel Pile ---------- 1228
Section 857—Bronze Bushings, Bearings, and Expansion Plates ---------- 1231
Section 858—Miscellaneous Metals ---------- 1232
Section 859—Guard Rail ---------- 1233
Section 860—Lumber and Timber ---------- 1237
Section 861—Piling and Round Timber ---------- 1239
Section 862—Wood Posts and Bracing ---------- 1244
Section 863—Preservative Treatment of Timber Products ---------- 1246
Section 865—Manufacture of Prestressed Concrete Bridge Members ---------- 1248
Section 866—Precast Concrete Catch Basin, Drop Inlet, and Manhole Units ---------- 1261
Section 867—Epoxy Coated Reinforcement Strips ---------- 1264
Section 868—Bituminous Adhesive for Raised Pavement Markers ---------- 1264
Section 870—Paint ---------- 1267
Section 880—Water ---------- 1289
Section 881—Fabrics ---------- 1291
Section 882—Lime ---------- 1299
Section 883—Mineral Filler ---------- 1301
Section 884—Chlorides ---------- 1302
Section 885— Elastomeric Bearing Pads ---------- 1303
Section 886—Epoxy Resin Adhesives ---------- 1304
Section 887— Bearing Plates with Polytetrafluoroethylene Surfaces ---------- 1306
Section 888—Waterproofing Membrane Materials ---------- 1307
Section 890—Seed and Sod ---------- 1310
Section 891—Fertilizers ---------- 1313
Section 893—Miscellaneous Planting Materials ---------- 1314
Section 894—Fencing ---------- 1320
Section 895—Polyacrylamide (PAM) ---------- 1326
Section 900—Miscellaneous ---------- 1326
Section 910—Sign Fabrication ---------- 1327
Section 911—Sign Posts ---------- 1329
Section 912—Sign Blanks and Panels ---------- 1337
Section 913—Reflectorizing Materials ---------- 1341
Section 914—Sign Paint ---------- 1342
Section 915—Mast Arm Assemblies ---------- 1344
Section 916—Delineators ---------- 1345

Section 917—Reflectors and Nonreflective Characters ---------- 1348
Section 918—Wild Animal Warning Reflector System ---------- 1350
Section 919—Raised Pavement Markers ---------- 1350
Section 920—Lighting Standards and Towers ---------- 1354
Section 921—Luminaires ---------- 1362
Section 922—Electrical Wire and Cable ---------- 1366
Section 923—Electrical Conduit ---------- 1367
Section 924— Miscellaneous Electrical Materials ---------- 1369
Section 925—Traffic Signal Equipment ---------- 1373
Section 926—Wireless Communications Equipment ---------- 1459
Section 934—Rapid Setting Patching Materials for Portland Cement Concrete ---------- 1480
Section 935—Fiber Optic System ---------- 1482
Section 936—Closed Circuit Television (CCTV) ---------- 1501
Section 937—Detection Systems ---------- 1522
Section 939—Communication and Electronic Equipment ---------- 1555
Section 940—NaviGator Advanced Transportation Management System Integration ---------- 1578
Section 941—Macro-Synthetic Fibers for Concrete Reinforcement ---------- 1583
Section 950—Telecommunication Facilities ---------- 1584
Section 951—Cable Systems ---------- 1584
Section 952—Non-Invasive Magneto-InductiveVehical Sensor ---------- 1584
Section 955—Highway Advisory Radio System ---------- 1584
Section 960—Precast Reinforced Concrete Three Sided Culvert ---------- 1584
Section 997—Mowing ---------- 1584

Section 101—Definitions and Terms

Whenever in these Specifications or in other Contract Documents the following terms or pronouns in place of them are used, the intent and meaning shall be interpreted as follows:

101.01 Abbreviations

Wherever the following abbreviations are used in the Specifications or on the Plans, they are to be construed the same as the respective expressions represented.

Abbreviation	Term
AAN	American Association of Nurserymen
AAR	Association of American Railroads
AASHTO	American Association of State Highway and Transportation Officials
ACI	American Concrete Institute
AGC	Associated General Contractors of America
AIA	American Institute of Architects
AIEE	American Institute of Electrical Engineers
AISC	American Institute of Steel Construction
AISI	American Iron and Steel Institute
AMS	Aerospace Materials Specification
ANSI	American National Standards Institute
ARA	American Railway Association
AREMA	American Railway Engineering and Maintenance of Way Association
ASCE	American Society of Civil Engineers
ASLA	American Society of Landscape Architects
ASTM	American Society of Testing and Materials
AWPA	American Wood Preservers' Association
AWWA	American Water Works Association
AWS	American Welding Society
CRSI	Concrete Reinforcing Steel Institute
DOT	Georgia Department of Transportation
EEO	Equal Employment Opportunity
FHWA	Federal Highway Administration
FSS	Federal Specifications and Standards, General Services Administration
GDT	Georgia Department of Transportation
IES	Illuminating Engineering Society
MUTCD	Manual on Uniform Traffic Control Devices
NEC	National Electrical Code
NEMA	National Electrical Manufacturers Association
NESC	National Electrical Safety Code

Abbreviation	Term
NFPA	National Fire Protection Association
SAE	Society of Automotive Engineers
SPIB	Southern Pine Inspection Bureau
SSPC	Steel Structure Painting Council
UL	Underwriters Laboratories, Inc.

101.02 Acceptance Plans

A defined method of taking and evaluating measurements for the purpose of determining the acceptability of a lot of material or construction.

101.03 Advertisement

The public announcement as required by law, inviting bids for work to be performed or materials to be furnished.

101.04 Available Day

Any calendar day exclusive of Saturdays, Sundays, and Legal Holidays on which the Engineer determines that the Contractor is not prevented from accomplishing at least five hours of productive work on the controlling item or items of work which would normally be in progress at that time by causes beyond his control, and not due to his fault or negligence, including but not restricted to unsuitable weather and its aftermath, suspension order of the Engineer, acts of God, acts of public enemy, fire, flood, epidemic, quarantine, strikes, or freight embargo.

101.05 Award

The formal acceptance by the Department of a Bid.

101.06 Base Course

One or more layers of specified material of designed thickness placed on a subgrade or a subbase to support a surface course.

101.07 Bid

See Proposal.

101.08 Bid Item

A specifically described unit of work for which a price is requested in the Proposal.

101.09 Bidder

A qualified individual, firm or corporation, or combination thereof, submitting a written Proposal for the Work advertised.

101.10 Board

The State Transportation Board.

101.11 Bridge

A structure, including supports, erected over a depression or an obstruction, such as water, a highway or a railway, etc., and having a track or passageway for carrying traffic, water or other moving loads and having an opening measured along the center of the roadway of more than 20 ft (6 m) between undercopings of abutments or extreme ends of openings for multiple boxes.

A. Bridge Length

The overall length of a structure measured along the center of the roadway between backs of abutment backwalls or between ends of bridge floor.

B. Bridge Roadway Width

The clear width of a structure measured at right angles to the center of the roadway between the bottom of curbs or, if curbs are not used, between the inner faces of parapet or railing.

C. Bridge Complete

An entire bridge including its substructure and superstructure.

D. Completed Bridge Site

Unless otherwise shown on the Plans or indicated in the Proposal, a Completed Bridge Site is one in which all grading is completed to subgrade elevation (except for the stage construction providing a bench for the end bent). The minimum acceptable length of completed full-depth embankment shall equal the maximum width of fill between slope stakes at the particular end of bridge. This minimum length of full-depth embankment will be measured along the roadway centerline away from the end-of-bridge station.

In cut sections, a Completed Bridge Site shall be considered to be complete when the excavation is down to the subgrade elevation and extends 50 ft (15 m) beyond the outer limits of the bridge in each direction.

In all cases, positive surface drainage shall be in place and functioning and all temporary erosion control measures shall be installed, functioning, and maintained.

101.12 Calendar Day

Every day shown on the calendar beginning at 12:00 midnight.

101.13 Chief Engineer

The Engineering Executive appointed by the State Transportation Board, or other authority as may be provided by law, and acting for the Department within the authority and scope of duties assigned.

101.14 Commissioner

The Commissioner of the Department of Transportation.

101.15 Completion Date

The calendar date by which the Contract shall be completed when such date is shown in the Proposal in lieu of the stipulation of a number of available days or calendar days.

101.16 Contract

The written agreement between the Department and the Contractor setting forth the obligations of the parties thereunder, including, but not limited to, the performance of the Work, the furnishing of labor and materials, and the basis of payment.

The Contract includes the Advertisement, Proposal, Contract Form and Contract Bond, Specifications, Supplemental Specifications, Special Provisions, general and detailed Plans, Notice to Proceed, and also any Supplemental Agreements that are required to complete the construction of the Work in an acceptable manner, including authorized extensions thereof, all of which constitute one instrument. No oral agreement or orders are to be considered as valid or as a part of the Contract.

101.17 Contract Bond (Performance and Payment Bond)

The approved form of security executed by the Contractor and his Surety or Sureties, which guarantees complete execution of the Contract and all Supplemental Agreements pertaining thereto, and the payment of all legal debts pertaining to the construction of the Project.

101.18 Contract Item (Pay Item)

A specifically described unit of work for which a price is provided in the contract.

101.19 Contract Time

The number of available days or calendar days allowed for the completion of the Contract, including authorized time extensions.

If a Completion Date is shown in the Proposal, the Contract Time then shall be the period between the issuance of the Notice to Proceed and the calendar date shown in the Proposal as the completion date.

101.20 Contractor

The individual, firm, corporation or combination thereof or governmental organization contracting with the Department for performance of prescribed work.

101.21 Culvert

Any structure under the roadway with a clear opening of 20 ft (6m) or less measured along the center of the roadway.

101.22 Department

The Department of Transportation, State of Georgia.

101.23 Easement

A right, other than the acquisition of title, acquired to use or control property for a designated purpose.

101.24 Engineer

The Chief Engineer of Georgia, acting directly or through a duly authorized representative.

101.25 Equipment

All machinery, apparatus, and tools necessary for the proper construction and acceptable completion of The Work, plus the necessary repair parts, tools, and supplies for upkeep and maintenance.

101.26 Extension Agreement

A written agreement entered into by and between the Department and the Contractor extending The Work beyond its original boundaries and prescribing additional work to be done including the basis of payment and time allowed for completion.

101.27 Extra Work

An item of work not provided for in the Contract as awarded but found essential to the satisfactory completion of the Contract within its intended scope.

101.28 Force Account

A method of payment for Extra Work when a Supplemental Agreement is not arrived at between the Engineer and the Contractor.

101.29 General Terms

Whenever the following words or similar terms appear herein, they shall be understood to imply “by or to the Engineer,” unless the context clearly indicates a different meaning:

"acceptable," "approved," "authorized," "called for," "considered necessary," "contemplated," "deemed," "designated," "directed," "established," "given," "indicated," "ordered," "permission," "permitted," "required," "satisfactory," "specified," "sufficient," "suitable," "suspended," "unacceptable," "unsatisfactory," "unsuitable."

101.30 Highway—Road—Street

Each of these words is a general term denoting a public way for the purpose of vehicular travel including the entire area within the Rights Of Way.

101.31 Holidays

In the State of Georgia, holidays occur on:

Date	Holiday
January 1	New Year's Day
3rd Monday in January	King's Birthday
January 19	Lee's birthday
3rd Monday in February	Washington's birthday
April 26	Confederate Memorial Day
Last Monday in May	National Memorial Day
July 4	Independence Day
1st Monday in September	Labor Day
2nd Monday in October	Columbus Day
November 11	Veterans' Day
4th Thursday in November	Thanksgiving Day
December 25	Christmas Day

If any of these Holidays fall on Sunday, the following Monday is considered to be the Holiday; if any of the Holidays fall on Saturday, the preceding Friday is considered to be the Holiday.

101.32 Inspector

The Engineer's authorized representative assigned to make a detailed inspection of Contract performance of any or all portions of The Work or materials thereof.

101.33 Invitation for Bids

See 101.03 Advertisement.

101.34 Laboratory

The testing laboratories of the Department or any other testing laboratory that may be designated by the Engineer.

101.35 Liquidated Damages

The fixed charges assessed against the successful Bidder or the Contractor for failure to execute the Contract or to complete the Contract within the Contract Time.

101.36 Materials

Any substances specified for use in the construction of The Work.

101.37 Materials Allowance

Payment for materials on hand as defined in Subsection 109.07, not to be confused with Partial Payments for work completed.

101.38 Median

The portion of a divided highway separating the traveled ways for traffic moving in opposite directions.

101.39 Minor Structures

Any structure not defined as a bridge.

101.40 Notice to Contractors

A written Notice soliciting Proposals, mailed to Contractors, suppliers and others in the Construction Industry, which will indicate with reasonable accuracy the quantity and location of the Work to be done or the character and quantity of the material to be furnished and the time and place of the opening of Proposals.

101.41 Notice To Proceed

Written notice to the Contractor to proceed with the Contract Work.

101.42 Pavement Structure

The combination of subbase, base course, and surface course placed on a subgrade to support the traffic load and distribute it to the roadbed.

101.43 Pay Item

See 101.18 Contract Item (Pay Item).

101.44 Performance and Payment Bond

See 101.17 Contract Bond (Performance and Payment Bond).

101.45 Plans

The approved plans, profiles, typical cross sections, working drawings and supplemental drawings or exact reproductions thereof, which show the location, character, dimensions, and details of The Work.

101.46 Prequalification

The procedure established and administered by the Department by virtue of which prospective Bidders are required to establish their responsibility and competence in advance of submission of Proposals.

101.47 Project

The specific section or sections of the transportation system together with all appurtenances and construction to be performed thereon under the Contract.

101.48 Proposal

The offer of a Bidder, on the prescribed form, to perform The Work and to furnish the labor and materials at the prices quoted.

101.49 Proposal Guaranty

Acceptable surety furnished by a bidder as a guaranty that he will enter into a contract and will furnish contract performance and payment bonds if a contract is awarded to him.

101.50 Right-of-Way

A general term denoting land, property, or interest therein, usually, but not required to be, in a strip, acquired for or devoted to a highway and its appurtenant structures.

101.51 Roadbed

The graded portion of a highway within top and side slopes, prepared as a foundation for the pavement structure and shoulder.

101.52 Roadside Development

Those items necessary to the complete highway which provide for the preservation of landscape materials and features; the rehabilitation and protection against erosion of all areas disturbed by construction through seeding, sodding, mulching and the placing of other ground covers; such suitable planting and other improvements as may increase the effectiveness and enhance the appearance of the highway.

101.53 Roadway

The portion of a highway within the limits of construction.

101.54 Salvaged Material

Material having value that is to be removed, preserved, or stockpiled as directed for later use by the Department. Specific reference is made to Subsection 610.3.05.A.

101.55 Shall or Will, Should, May

As used in these Specifications, the following definitions apply:

SHALL or WILL—A mandatory condition. When certain requirements are described with the “shall” or “will” stipulation, it is mandatory that the requirements be met.

SHOULD—An advisory condition. Considered to be recommended but not mandatory.

MAY—A permissive condition. No requirement is intended.

101.56 Shoulder

The portion of the roadway contiguous with the traveled way for accommodations of stopped vehicles, for emergency use, and for lateral support of base and surface courses.

101.57 Sidewalk

That portion of the roadway primarily constructed for the use of pedestrians.

101.58 Skew or Skew Angle

The acute angle between the centerline of the roadway and a line parallel to a pier, bent, or abutment of a bridge or parallel to the centerline of a culvert.

101.59 Special Provisions

Additions or revisions to the Standard or Supplemental Specifications, applicable to an individual Project.

101.60 Specifications

A general term applied to all directions, provisions and requirements pertaining to performance of The Work.

101.61 Standard Specifications

A publication titled:

"DEPARTMENT OF TRANSPORTATION, STATE OF GEORGIA STANDARD SPECIFICATIONS, CONSTRUCTION OF TRANSPORTATION SYSTEMS."

Transportation systems are defined as all modes of transportation, including but not limited to, highways, airports, rail and ports.

101.62 State Highway Engineer

See 101.13 Chief Engineer.

101.63 State

The State of Georgia.

101.64 Station

When used as a term of measurement will be 100 linear ft (1 km) measured horizontally.

101.65 Structures

Bridges, culverts, catch basins, drop inlets, retaining walls, cribbing, manholes, endwalls, buildings, sewers, service pipes, underdrains, foundation drains, and other features that may be encountered in The Work and not otherwise classified herein.

101.66 Subbase

The layer or layers of specified or selected material of designed thickness placed on a subgrade to support a base course.

101.67 Subcontractor

Any individual, firm, corporation, or combination thereof to which the Contractor with the written consent of the Department sublets any part of the Contract.

101.68 Subgrade

The top surface of a roadbed upon which the pavement structure and shoulders are constructed— generally the top 12 in (300 mm) within cuts and fills.

101.69 Subgrade Treatment

Modification of subgrade material by stabilization.

101.70 Stabilization

Modification of soils or aggregates by incorporating materials which will increase load bearing capacity, firmness, and resistance to weathering or displacement.

101.71 Substructure

All of that part of the bridge structure below the bearings of simple and continuous spans, skewbacks of arches and top of footings of rigid frames, including backwalls, wingwalls and wing protection railings.

101.72 Superintendent

The Contractor's authorized representative directly and solely responsible for the supervision and direction of The Work.

101.73 Superstructure

The entire bridge structure except the substructure.

101.74 Supplemental Agreement

A written agreement entered into by and between the Department and the Contractor covering modifications or alterations to the original Contract, and establishing any necessary new Contract Items, any other basis of payment, and any time adjustments for The Work affected by the changes. This Agreement becomes a part of the Contract when properly executed and approved.

101.75 Supplemental Specifications

Approved additions to or revisions of the *Standard Specifications*.

101.76 Surety

The corporation, partnership or individual, other than the Contractor, executing a Bond furnished by the Contractor.

101.77 The Work

The Work shall mean the furnishing of all labor, materials, equipment, superintendence and other incidentals necessary or convenient to the successful completion of the Project and the carrying out of all the duties and obligations imposed by the Contract.

101.78 Titles (or Headings)

The titles or headings of the Sections and Subsections in these Specifications are intended for convenience of reference and shall not be considered as having any bearing on the interpretation of the Specifications.

101.79 Traveled Way

The portion of the roadway for the movement of vehicles, exclusive of shoulders and auxiliary lanes.

101.80 Treasurer

The Treasurer of the Department of Transportation.

101.81 Working Drawings

Any supplementary drawings or similar data which the Contractor is required to submit to the Engineer for approval including but not limited to stress sheets, shop drawings, erection plans, falsework plans, framework plans, cofferdam plans, and bending diagrams for steel.

101.82 Related References

Listing of Specifications and documents contained in the Section are intended for convenience of reference and shall not be considered as having any bearing on the interpretation of the Specifications.

Section 102—Bidding Requirements and Conditions

102.01 Prequalification of Bidders

Before submitting a bid in excess of $2,000,000, the Bidder shall have been prequalified with the Department and received a Certificate of Qualification in accordance with the Rules and Regulations approved and adopted by the State Transportation Board. Bidders submitting bids of $2,000,000 or less shall have been registered with the Department. In addition, the aggregate total amount a Non-prequalified Bidder may have under contract shall not exceed $4,000,000.

Bidders intending to consistently submit Proposals shall prequalify at least once every two years. However, qualifications may be changed during that period upon the submission of additional favorable reports or upon unsatisfactory performance. In addition, the Department reserves the right at any time to require the Contractor to furnish a current financial and experience statement.

102.02 Competency of Bidders

The Department may limit the amount of work awarded to any Contractor, based on the information furnished the Department in the Prequalification process. The Department may also limit the aggregate amount of work awarded to any non-prequalified Contractor.

The Department may refuse any Contractor Proposals to bid on additional work if the Contractor is behind schedule on work he has with the Department, as determined from the Progress Schedule called for in the Specifications. This refusal will apply to all applications for Proposals, made in the name of an individual, firm, partnership, or corporation with which the delinquent Contractor is affiliated.

102.03 Contents of Proposal Forms

The Department will make available to the prospective Bidder a Void for Bidding Proposal Form which may be accessed on the Office of Construction Bidding Administration web page. This form will state the location and description of the contemplated construction and will show the approximate estimate of the various quantities and kinds of work to be performed or materials to be furnished, and will have a schedule of Items for which Unit Bid prices are invited. The Proposal Form will state the time in which The Work must be completed, the amount of the Proposal Guaranty, and the date of the opening of Proposals. The Form will also include any Special Provisions or requirements that vary from or are not contained in the *Specifications*. Also included with each Proposal Form will be a Non-Collusion Certificate, Construction Contractors Bid Opportunity List, and Request For Eligibility To Bid. All papers contained in the Proposal Form are considered a part thereof and must not be detached or altered. The Plans, Specifications, and other documents designated in the Proposal Form will be considered a part of the Proposal whether attached or not.

102.04 Interpretation of Estimates

The quantities of work to be performed and materials to be furnished to complete the construction of The Work as shown on the Plans and contained in the Proposal are approximate and are to be used for comparing Bids. The Department does not guarantee that the quantities indicated on the Plans or given in the Proposal will be the actual construction quantities. The Contractor shall not plead deception or misunderstanding because of variation from these quantities or minor variations from the locations, or character of the Work. Payment to the Contractor will be made only for the actual quantities of work performed in accordance with the Plans and Specifications. If, when construction is completed, the actual quantities are more or less than the quantities given in the Proposal, the Unit Prices Bid in the Proposal will still prevail, except as otherwise provided in Subsection 104.03 and Subsection 109.05.

102.05 Examinations of Plans, Specifications, Special Provisions, and Site of the Work

The Bidder is expected to examine carefully the site of the proposed work, the Proposal, Plans, Specifications, Supplemental Specifications, Special Provisions, and Contract forms before submitting a Proposal. The submission of a Proposal shall be considered prima facie evidence that the Bidder has made such examination and is satisfied as to the conditions to be encountered in performing The Work and as to the requirements of the Plans, Specifications, Supplemental Specifications, Special Provisions, and Contract.

It is the obligation of the Bidders to make their own interpretation of all subsurface data that may be available as to the nature and extent of the materials to be excavated, graded, or driven through. Such information, if available and furnished to the Bidders by the Department, does not in any way guarantee the amount or nature of the material which may be encountered.

102.06 Preparation of Proposal

The Bidder shall submit its Proposal on the form furnished by the Department (GADOT). The blank spaces on the Proposal shall be filled in correctly for each Pay Item (except alternate items) and the Bidder shall write in ink the Unit Price or a Lump Sum Price as called for in the Proposal for each Pay Item listed therein. In addition, the Bidder shall also show the products of the respective Unit Prices and quantities and the total amount of the Bid by adding the amounts of all Bid Items. In the event of a discrepancy in any of the figures, the Unit Price will govern and the Bid will be recalculated.

In the case of Alternate items, Unit Prices shall be entered for only one alternate.

The Non-Collusion Certificate on the Department's standard form included in the Proposal shall be executed.

The Certificate of Current Capacity shall be executed under oath and substantiated by the report of Status of Contracts on Hand.

The Construction Contractors Bid Opportunity List standard form shall be completed with the required information.

The Georgia Security and Immigration Compliance Act Affidavit shall be completed with the required information.

The Bidder shall notify the GADOT Office of Construction Bidding Administration by transmitting the completed Request For Eligibility To Bid Form D. O. T. RFETB for each Letting Call Order Number in which the Bidder intends to submit a bid by no later than 12:00 p.m. the day prior to the letting.

If the Proposal is made by an individual, its name and post office address shall be shown; if by a partnership, the name and post office address of one member of the partnership shall be shown; if by a corporation, the Proposal shall show the name, title and business address of the officer signing the Proposal. The Bidder's Proposal shall be signed in ink or by Digital Signature by the individual, by one or more members of a partnership, or by one or more of the officers of a corporation, whichever is applicable. In the event of a joint venture, the Proposal shall be signed in ink or by Digital Signature by each individual involved, by each partnership through one or more of its members, or by each corporation through one or more officers of the corporation, whichever is applicable. Proposals not properly signed may be disqualified and rejected.

All bids shall be submitted using the GADOT/AASHTO (American Association of State Highway and Transportation Officials) Electronic Bidding System (Expedite). When submitting a bid electronically, the Bidder's Proposal shall consist of the Bid pages generated by the Expedite software including the Cover page, Bid Item pages, Disadvantaged Business Enterprise (DBE) pages (if applicable), Miscellaneous Data pages and the Signature page. By submitting a bid electronically, the Bidder acknowledges all requirements included in the proposal, amendments, plans, Standard Specifications, and Supplemental Specifications are a part of the Bid and Contract.

The electronic bid shall be submitted by one of the following methods:

A. Hand delivery of the electronic bid to the Department at the place specified in the Notice To Contractors.

The bid shall include the 3 ½ inch (90 mm) electronic diskette or CD Rom or USB Drive and the Bid pages described above.

B. Electronic Bid Submission via the Internet and Bid Express™.

(Note: The Bidder shall secure an account and a valid Digital Signature from Bid Express™ (www.bidx.com) in order to use this method.

Instructions for preparing and submitting bids by these two methods are as follows:

A. Hand Delivery of Bid to the Department

1. Access to the electronic bidding information is available on Bid Express™ at www.bidx.com and the GADOT Construction Bidding Administration Internet Web Site at www.dot.ga.gov/doingbusiness/contractors/pages/default.aspx.

2. Electronic bids shall be prepared through the use of a computer controlled printer.
3. The Bidder shall sign the electronic bid in the appropriate areas.
4. When installing the Bid program the Bidder shall enter their vendor code in the following format: 2DO900. Before running the electronic bidding programs, the Bidder shall read the on-line help documentation for the Expedite software.
5. **Zero (0) is considered to be a valid bid. The Bidder shall not enter 0 in any Unit Price field unless zero is the intended bid for that item.**
6. All addenda shall be included in the electronic bid submitted.
7. For "Joint Bids" the Bidder shall select **tools** from the Windows Expedite menu and mark the electronic bid as **"Joint Bid".**
8. The Bidder shall select **tools** and then **check bid** to check the bid and assure there are no errors prior to printing the electronic bid. After final printing, the Bidder may make changes to the electronic bid by indicating the changes in ink and initialing prior to submitting the bid.
9. Once the Bidder has completed the bid and made all desired changes, the diskette/CD Rom/USB Drive, a printout of the Cover sheet, Bid Item pages, DBE pages (if applicable), Miscellaneous Data pages, and Signature page shall be submitted to the Department. In case of a discrepancy between the diskette and the hard copy of the Bid Item pages, the hard copy will govern.
10. Electronic Bid pages shall be 8 ½ inch (216 mm) horizontal by 11 inch (279 mm) vertical. Bid information shall be placed across the horizontal width on each page.
11. The paper used for an electronic bid shall be of sufficient quality and durability to maintain clear and concise images and to withstand frequent handling.
12. If originally printed on continuous roll paper, electronic bids shall be separated before submitting the Bid to the Department.
13. All computer printed characters shall be legible. The Electronic Bid pages shall be submitted in the bid envelope provided.
14. The diskette shall be submitted in a separate sealed envelope from the Bid pages. The Bidder shall submit all electronic bids on one diskette/CD Rom/USB Drive. The envelope containing the diskette shall include the Bidders name and the Letting Call Order Numbers for which electronic bids are submitted.

B. Electronic Bid Submission Via The Internet And Bid Express™

1. Access to the electronic bidding information is available on Bid Express™ at www.bidx.com and the GADOT Construction Bidding Administration Internet Web Site at www.dot.ga.gov/doingbusiness/contractors/pages/default.aspx.
2. When installing the Bid program the Bidder shall enter their vendor code in the following format: 2DO900. Before running the electronic bidding programs, the Bidder shall read the on-line help documentation for the Expedite software.
3. **Zero (0) is considered to be a valid bid. The Bidder shall not enter 0 in any Unit Price field unless zero is the intended bid for that item.**
4. All addenda shall be included in the electronic bid submitted.
5. **"Joint Bids" are allowed with Electronic Bid Submission via the Internet and Bid Express™**
6. The Bidder shall select **tools** and then **check bid** from the Windows Expedite menu to check the bid and assure there are no errors prior to submitting the electronic bid. The electronic bid may be changed and resubmitted electronically to Bid Express™ as many times as desired prior to the advertised cutoff time specified in the Notice To Contractors. The last bid submitted for a given Letting Call Order Number prior to the cutoff time will be the Bid.
7. The Bidder shall make no claim against the Department in the event it is unable to submit its bid to Bid Express™ and/or Bid Express™ is unable to submit the bid(s) to the Department. The Department reserves the right to postpone the public posting of bids in the event of technical difficulties.

C. A fully executed Proposal Guaranty and Power of Attorney for each Letting Call Order Number bid shall be submitted by one of the following methods:

1. Delivery to the GADOT Office of Construction Bidding Administration, Room 1113, in a sealed envelope by 12:00 noon on the day prior to the Bid Opening. Each Proposal Guaranty shall be clearly and legibly marked with the Letting Call Order Number.
2. Electronic submission via the Internet and Bid Express™ by the time and date set in the Notice To Contractors for submission of Proposals.

   The Proposal Guaranty for a "Joint Bid" shall include the names of all Joint Venture parties involved in the bid.

102.07 Rejection of Proposals

Proposals may be rejected as irregular if their consideration is conditioned upon the acceptance or rejection of other Proposals submitted by the same Bidder, if the Georgia Security and Immigration Compliance Act Affidavit is not completed, if the Request For Eligibility To Bid D.O.T (Form RFETB) has not been submitted, if the Certificate of Current Capacity is not executed under Oath and substantiated, if a Unit Price is not shown for each Pay Item, or if they fail to comply with the Electronic Bidding System (EBS) bidding requirements. In the case of alternate items, Unit Prices shall be entered for only one alternate. The Department reserves the right to disqualify and reject any Proposal that is not properly signed in accordance with the requisite of Subsection 102.06.

A. Collusion

Any and all Proposals will be rejected if the Department believes that collusion exists among the Bidders and no participant in such collusion may submit future Proposals for the same work. The Department reserves the right to review and to refuse to consider any Proposal if the Bidder fails to execute the Non-Collusion Certificate.

B. Single Proposals

Only one Proposal from any person, partnership, or corporation under the same or different names shall be submitted on any Project.

C. Unbalanced Bids

Proposals may be rejected if any of the Unit Prices are obviously unbalanced. The Department will decide whether any Unit Prices are unbalanced either excessively above or below a reasonable cost analysis value determined by the Engineer, particularly if these unbalanced amounts are substantial and contrary to the interest of the Department.

D. Omissions and Alterations

Proposals may be rejected as irregular if they show any omissions, alterations of form, additions or conditions not called for, unauthorized alternate bids, erasures or changes not initialed, or other irregularities.

E. Debts

The Department reserves the right to reject Proposals from Bidders who have not paid or satisfactorily settled all legal debts due on other Contracts at the time Proposals are received.

F. Technicalities

The Department reserves the right to reject any and all Proposals and to waive technicalities at any time before the Contract has been signed by the Department.

G. Non-Prequalified Bidders

Proposals submitted in excess of $2,000,000 by non-prequalified contractors under Rule 672-5 of the Department's Rules and Regulations Governing the Prequalification of Prospective Bidders will be disqualified and rejected.

H. Failure to List Disadvantaged Business Enterprise (DBE) Participants

If the contract has an established DBE goal, the Department reserves the right to reject and disqualify any proposal if the bidder has failed to list bona fide DBE participants with sufficient participation to achieve at least the established goal. The Department may consider for award a proposal with less participation than the established goal if both:

- The bidder can demonstrate that no greater participation could be obtained and;
- The participation proposed by the low bidder is not substantially less than the participation proposed by the other bidders on the same contract.

I. Failure to Submit Georgia Security and Immigration Compliance Act Affidavit

No Proposal will be considered without submission of the completed Georgia Security and Immigration Compliance Act Affidavit for each Letting Call Order Number by no later than the 12:00 p.m. the day prior to the letting.

J. Failure to Submit Request For Eligibility To Bid

No Proposal will be considered without submission of the completed Request For Eligibility To Bid Form for each Letting Call Order Number by no later than the deadline 12:00 p.m. the day prior to the letting.

102.08 Proposal Guaranty

No Proposal will be considered unless it is accompanied by a Proposal Guaranty of the character and in an amount not less than the amount indicated in the Proposal. Each bid submitted must be accompanied by a separate Proposal Guaranty. No Proposal Guaranty will be considered to cover any Bid except the one to which it is attached.

102.09 Delivery of Proposals

Each Proposal, together with the Proposal Guaranty, shall be submitted in a sealed envelope so marked as to identify its contents without being opened (See Section 102.06.A), unless submitted electronically via the Internet and Bid Express (See Section 102.06.B). Proposal forms are not transferable. Proposals will be received until the time and date set in the Notice To Contractors and shall be in the hands of the officials indicated by that time. Proposals received after the advertised cutoff time established for submission of Proposals will be returned unopened to the Bidder.

102.10 Withdrawal or Revision of Proposals

Any Bidder may withdraw his Proposal by submitting, by telegram, letter, or facsimile transmission received prior to the advertised cutoff time specified in the Notice To Contractors and verified by the Department, a DEPARTMENT OF TRANSPORTATION BID PROPOSAL WITHDRAWAL FORM, completed by an authorized officer of the company, whose signature is legally binding upon said company.

Any Bidder may submit a Bid change, by telegram, letter, or facsimile transmission received prior to the advertised cutoff time specified in the Notice To Contractors and verified by the Department, completed by an authorized officer of the company, whose signature is legally binding upon said company. In which case, the Department will change the Bid at the time of opening and at such time will announce that a change was received.

102.11 Public Bid

Bid results will be posted and available on Bid Express™ at www.bidx.com and the GADOT Construction Bidding Administration Internet Web Site at www.dot.ga.gov/doingbusiness/contractors/pages/default.aspx. at the time specified in the Notice To Contractors.

102.12 Material Guaranty

The Department reserves the right before the Contract is awarded to require the Bidder to furnish a complete statement of the origin, composition, and manufacture of any or all materials to be used in the construction of The Work, together with samples, which may be subjected to the tests provided for in the Specifications to determine their quality and fitness for The Work.

102.13 Combination or Conditional Proposals

If the Department so elects, proposals may be issued for projects in combination and/or separately, so that bids may be submitted either on the combination or on separate units of the combination. The Department reserves the right to make awards on combination bids or separated bids to the best advantage of the Department. No combination of bids, other than those specifically set up in the proposals by the Department, will be considered. Separate contracts will be written for each individual project included in the combination.

Conditional proposals will be considered only when so stated in the special provisions.

102.14 Landscape Projects

Only qualified Landscape Contractors shall submit bids for Landscape Projects. Qualifications required are as follows:

1. The Contractor shall ensure that all nursery stock used on this project is obtained from a State certified nursery. All work done by the Contractor on this project shall be done under the direct supervision of a licensed nurseryman.
2. The Contractor shall have a certified pesticide operator's license for the State of Georgia and shall furnish evidence of such with the bid.
3. The Contractor shall have satisfactorily executed landscape plantings of a similar nature and shall furnish with this bid a certified statement of such compliance.

102.15 Submittal of "Georgia Security and Immigration Compliance Act Affidavit"

All Bidders for each Letting Call Number shall submit the completed "Georgia Security and Immigration Compliance Act Affidavit" to the GADOT Office of Construction Bidding Administration, Room 1113, in a sealed envelope by 12:00 p.m. on the day prior to the Bid Opening as a matter of Bidder responsibility.

If the "Georgia Security and Immigration Compliance Act Affidavit" is not delivered to the GADOT Office of Construction Bidding Administration, Room 1113, in a sealed envelope by 12:00 p.m. on the day prior to the Bid Opening, the Bid will be subject to rejection.

102.16 Submittal of "Request For Eligibility To Bid"

All Bidders for each Letting Call Number shall submit the completed "Request For Eligibility To Bid Form D. O. T. RFETB" to the GADOT Office of Construction Bidding Administration, Room 1113, by no later than 12:00 p.m. on the day prior to the Bid Opening.

If the "Request For Eligibility To Bid Form D. O. T. RFETB" is not received by the GADOT Office of Construction Bidding Administration, Room 1113, by no later than 12:00 p.m. on the day prior to the Bid Opening , the Bid will be subject to rejection.

102.17 Submittal of "Certificate of Current Capacity" and "Status of Contracts on Hand"

The apparent low Bidder for each Letting Call Number shall submit the executed "Certificate of Current Capacity" and the "Status of Contracts on Hand" to the GADOT Office of Construction Bidding Administration, Room 1113, in a sealed envelope by 12:00 p.m. on the first working day after the Bid Opening.

If the "Certificate of Current Capacity" and the 'Status of Contracts on Hand" are not delivered to the GADOT Office of Construction Bidding Administration, Room 1113, in a sealed envelope by 12:00 p.m. on the first working day after the Bid Opening, the Bid may be subject to rejection.

102.18 Submittal of "Construction Contractors Bid Opportunity List"

All Bidders for each Letting Call Number shall submit the completed "Construction Contractors Bid Opportunity List" to the GADOT Office of Construction Bidding Administration, Room 1113, in a sealed envelope by 12:00 p.m. on the third working day after the Bid Opening as a matter of Bidder responsibility.

If the "Construction Contractors Bid Opportunity List" is not delivered to the GADOT Office of Construction Bidding Administration, Room 1113, in a sealed envelope by 12:00 p.m. on the third working day after the Bid Opening, the Bid may be subject to rejection.

Section 103—Award and Execution of Contract

103.01 Consideration of Proposals

After the Proposals are opened and read, the correct sum of the products of the quantities shown in the Proposal multiplied by the Unit Prices Bid will be considered the amount of the Bid. If there is a discrepancy between Unit Bid Prices and extensions, the Unit Bid Price shall govern in accordance with Subsection 102.06. In determining Unit Bid Prices, fractional parts of a cent less than 1/1000 cent ($0.00001) will not be considered significant and will be dropped. The amounts will then be compared and the results of this comparison will be made public at the time specified in Notice To Contractors. Until the final Award of the Contract, however, the right will be reserved to reject any and all Proposals, to waive technicalities, to advertise for new Proposals, or to proceed to do The Work otherwise if the interest of the Department will be promoted thereby.

If, prior to the award of a contract, the low bidder discovers that an obvious error was made in the preparation of the bid, a request to the Department may be made to allow the withdrawal of the bid without bid bond forfeiture. The decision whether or not to grant such a request rests entirely with the Department and in the discretion of the Department. If such a request is granted, the Department may, in its discretion, award the contract to the next lowest reliable bidder, readvertise, perform the work itself, or abandon the project.

103.02 Award of Contract

If a Contract is Awarded, it will be Awarded to the lowest reliable Bidder whose Proposal shall have met all the prescribed requirements. The Contract will be Awarded, if at all, within 50 calendar days after the opening of the Proposals, unless a longer period is specified in the Proposal or the successful Bidder agrees in writing to a longer period of time for the Award.

Single as well as multiple proposals for a project will be publicly opened and read. If only one proposal is received on a project and the amount of that proposal is equal to or less than the Department's cost estimate for the project, as certified by the Chief Engineer, the cost estimate will be read.

If only one proposal is received and the amount of that proposal exceeds the Department's cost estimate for the project, the Department may, at its option, award the contract, or reject the proposal and readvertise, perform the work itself, or abandon the project.

The Award of Contracts involving work financed entirely or in part by Federal funds is conditioned upon the concurrence of the Federal agency involved. No bids will be negotiated or adjusted.

Award to the successful bidder will be made public through the publication of the Award Announcement. If the successful bidder fails to execute the Contract and file acceptable bonds within the period set forth in Subsection 103.07 thereby causing cancellation of the award and forfeiture of the Proposal Guaranty, the Department may award the Contract to the next lowest reliable bidder, readvertise, abandon the project, or perform the work itself.

103.03 Cancellation of Award

The Department reserves the right to cancel the Award of any Contract at any time before the execution of said Contract by all parties without any liability against the Department.

103.04 Return of Proposal Guaranty

All Proposal Guaranties may be retained until the Contract and the Contract Bond have been signed and approved. Early release of Proposal Guaranties will be considered if a request is made in writing. The Department reserves the right to return all Proposal Guaranties by registered or certified mail, and its responsibility pertaining to them will end when they are mailed.

103.05 Requirements of Contract Bonds

The penal sum of the Contract shall be defined as 120 percent of the Original Contract Amount. At the time of the execution of the Contract, and as a part thereof, the successful Bidder shall furnish Contract Bonds as specified below:

Georgia Resident Contractor

Georgia Resident Contractors shall furnish Performance and Payment Bonds as follows:

Performance bond in the full penal sum of the Contract and payment bond in an amount equal to 110 percent of the full penal sum of the Contract. The aggregate amount of the bonds shall be 210 percent of the full penal sum of the Contract.

Nonresident Contractor

Nonresident Contractors shall furnish Contract Bonds as follows:

Performance bond in the full penal sum of the Contract, payment bond in the full penal sum of the Contract, and tax bond in the amount of 10 percent of the full penal sum of the Contract. The aggregate amount of the bonds shall be 210 percent of the full penal sum of the Contract. The tax bond shall represent the nonresident contractor bond required by the Revenue Department in accordance with Sections 48-13-30 through 48-13-38 of the Official Code of Georgia Annotated.

The Bonds shall be made on forms furnished by the Department and executed by the Contractor and a Surety Company acceptable to the Department, authorized to do business in Georgia. In the event the Bond is made by an out of state agent, it shall be countersigned by a Georgia Resident Agent in accordance with the laws of Georgia.

103.06 Execution and Approval of Contract

The Contract shall be signed by the successful Bidder and returned within 15 calendar days after the date of the letter transmitting the Contract to the Bidder. If the Contract is not executed by Department within 30 calendar days following receipt from the Bidder of the signed Contract, unless a longer period is specified in the Proposal or the successful Bidder agrees in writing to a longer period, the Bidder shall have the right to withdraw his Bid without penalty. No Contract shall be considered as effective until it has been fully executed by all of the parties.

103.07 Failure to Execute Contract

Failure to execute the Contract and file acceptable Bonds within 15 calendar days after the date of the letter transmitting the Contract to the Bidder shall be just cause for the cancellation of the Award and forfeiture of the Proposal Guaranty which shall become the property of the Department, not as a penalty, but in liquidation of damages sustained.

If the Department readvertises the project, the Department may, at its discretion, not allow the bidder who refused to Execute the Contract to submit a Proposal on the readvertised project.

Section 104—Scope of Work

104.01 Intent of Contract

The intent of the Contract is to provide for the construction and completion in every detail of The Work described. The Contractor shall furnish all labor, materials, equipment, tools, transportation, and supplies required to complete The Work in accordance with the Plans, Specifications, and terms of the Contract.

104.02 Special Work

Should any construction or conditions not thoroughly or satisfactorily stipulated and set forth by the Standard Specifications and Supplements thereto be anticipated on any proposed work, Special Provisions for such work will be included in the Proposal and the Contract as a part thereof. Should any such Special Provisions contain requirements in conflict with the *Standard Specifications* and Supplements thereto, the Special Provisions will govern.

104.03 Alteration of Plans or Character of Work

A. Authority to Make Changes

The Department reserves the right to make, at any time during the progress of The Work, such increases or decreases in quantities and such alterations in the details of construction, including alterations in the grade or alignment of the road or structure or both, as may be found necessary or desirable. Such increases or decreases and alterations shall not invalidate the contract nor release the Surety, and the Contractor agrees to perform The Work as altered, the same as if it had been a part of the original Contract.

Whenever an alteration in character of work involves a substantial change in the nature of the design or in the type of construction or materially increases or decreases the cost of performance, a Supplemental Agreement acceptable to both parties shall be executed before work is started on such alteration, except that in the absence of a Supplemental Agreement acceptable to both parties, the Engineer may direct that the work be done by Force Account. Any Force Account Agreement shall be in writing, specifying the terms of payment, signed by the State Construction Engineer and agreed to in writing by the Contractor.

All work shall be performed as directed and in accordance with the Specifications.

B. No Waiver of Contract

Changes made by the Engineer will not be considered to waive any of the provisions of the Contract, nor may the Contractor make any claim for loss of anticipated profits because of the changes, or by reason of any variation between the approximate quantities and the quantities of work as done.

C. Certain Items Not Limited

The quantities of all types of excavation, embankment when a Pay Item, perforated underdrain pipe, ditch paving, subgrade treatment materials, stabilizers, extra depth of concrete including its reinforcement, piling, guard rail, asphaltic concrete leveling, erosion control items, traffic control items, slope paving, bridge rip-rap, filter fabric, or any other items that cannot conveniently be determined accurately until after The Work is in progress, and any increase or decrease in these quantities, whatever the amount, will be considered normal overruns or underruns. The Engineer has unlimited authority to increase or decrease these quantities.

D. Changes in Other Quantities

The Engineer may increase or decrease the quantities of any and all other Pay Items, without changing the Unit Prices Bid, provided that the sum total of such changes, exclusive of changes in those items covered in Subsection 104.03.C, does not increase or decrease the original Contract amount by more than 20 percent.

E. Changes to Original Length or Cost of Project

The Engineer has the authority to extend or reduce the total length or total cost of the Project by as much as 20 percent. The provisions of Subsection 104.03.C, covering overruns or underruns of certain Pay Items apply also to overruns or underruns in quantities resulting from an extension or reduction in the length of the Project. If the Project is extended in length, an Extension Agreement will be executed. If the Extension Agreement calls for Pay Items already in the Contract, the Unit Prices for such Items will not be changed except as provided in Subsections 104.03.A, 104.03.B and 104.03.D. New work for which no Unit Prices have been Bid will be paid for as Extra Work as defined in Subsection 104.04.

F. Railroad Grade Separation Structures

Changes in design or construction features of railroad grade separation structures must be submitted to the Engineer of the railroad for approval. The Department will diligently expedite all correspondence with the railroad officials, but will not be responsible to the Contractor for any delay to the Contractor’s work resulting from delay in securing the necessary approval. The Engineer will give due consideration to such delays in determining the time for completion of the Contract.

104.04 Extra Work

The Contractor shall perform unforeseen work, for which there is no price included in the Contract, whenever it is necessary or desirable in order to complete fully the work as contemplated. Such work shall be performed in accordance with the Specifications and as directed, and will be paid for as provided in Subsection 109.05.

104.05 Maintenance During Construction

A. Contractor Maintenance

The Contractor shall maintain the Project from the beginning of construction operations until maintenance acceptance or final acceptance of the Project, except as otherwise provided in Subsection 104.05.B. This maintenance shall constitute continuous and effective work prosecuted day by day with adequate equipment and forces to the end that the roadway or structures are kept in satisfactory condition at all times. This includes signing, pavement markings, and traffic control devices as outlined in the Manual on Uniform Traffic Control Devices, Section 150, Project Plans and Special Provisions for Traffic Control. All existing guard rail, signs, pavement, pavement markings, bridge handrail, and other safety appurtenances shall also be maintained in a safe and satisfactory condition.

The Contractor shall not allow vegetative growth at any time to obstruct signs, delineation, traffic movements, or sight distance. The Contractor shall, at intervals not to exceed 6 months, clean up and remove litter and debris; remove all weeds from around guard rail, barrier, poles, standards, utility facilities, and other structures; and cut or trim trees, bushes, or tall grass. These requirements shall apply to all areas within the project termini and lateral limits.

For projects or segments of projects with staging which requires that traffic be maintained through the project limits during the prosecution of The Work, the Contractor shall assume all responsibility for damage to the work until either maintenance acceptance or final acceptance of the section or Project.

On projects constructed with traffic relocated to an alternate roadway or projects constructed on new location, the Contractor shall be responsible for all damage to the work until the Department directs that the Project be opened to traffic. At that time the Contractor will no longer be responsible for traffic related damage to the work other than that attributable to the Contractor's actions or inadequate construction. The Department may direct, however, that traffic-related damage be repaired at existing unit prices or as extra work as provided for in Subsection 104.04.

All costs for maintenance of traffic shall be as provided in Section 150. All other maintenance costs during construction and before the Project is accepted will be included in the Contract Unit Prices and the Contractor will not be paid an additional amount.

B. Maintenance of Traffic During Suspension of Work

During any suspension of work ordered by the Engineer, the Contractor shall make passable and shall open to traffic such portions of the Project and temporary roadways, special detours, or portions thereof as may be agreed upon between the Contractor and the Engineer for the temporary accommodation of necessary traffic during the anticipated period of suspension. Thereafter, and until issuance of an order for the resumption of construction operations, the maintenance of the temporary route or line of travel agreed upon will be by and at the expense of the Department. When work is resumed, the Contractor shall replace or renew any work or materials lost or damaged because of such temporary use of the Project; shall remove to the extent directed by the Engineer any work or materials used in the temporary maintenance thereof by the Department; and shall complete the Project in every respect as though its prosecution had been continuous and without interferences. All additional work caused by such suspensions, for reasons beyond the control of the Contractor, will be paid for by the Department at Contract prices or by Force Account.

C. Maintenance Directed By The Engineer

If the Engineer directs special maintenance for the benefit of the traveling public, the Contractor will be paid on the basis of Unit Prices or under Subsection 104.04. The Engineer will be the sole judge of work to be classed as special maintenance.

D. Detours Outside Right-of-Way

The Department will be responsible for the construction and maintenance of detours outside the right-of-way except where otherwise provided for in the Contract.

E. Special Detours

When the Proposal contains Bid Items which provide for construction, maintenance, and removal of detour bridges or roads, the payment for such items shall cover all cost of constructing and maintaining such detour or detours, including the construction of any and all temporary bridges and accessory features and the removal of the same, and obliteration of

the detour road, except as otherwise provided in Subsection 104.05.B. Right-of-Way for temporary highways or bridges called for under this Subsection will be furnished by the Department.

F. Delays to Traffic

Two-way traffic shall be maintained at all times, unless otherwise approved. The Contractor shall not stop traffic without permission of the Engineer.

When one-way traffic is approved, the Contractor shall provide the necessary flagmen to direct such traffic. When specified in the Proposal, the Contractor shall furnish pilot vehicles.

G. Overhead Sign Lighting

Maintenance of overhead sign lighting within major construction or reconstruction Projects shall be performed by the Contractor at no additional cost to the Department. All required repairs shall be made within 48 hours.

In the event such repairs are not made within the specified time, State Forces may perform them and the cost thereof deducted from any monies due or which may become due the Contractor.

104.06 Right in and Use of Materials Found on the Project

Materials that have salvage value, as determined by the Engineer, shall remain the property of the Department and shall be utilized as directed by the Engineer. The Contractor, with the approval of the Engineer, may use on the Project such materials as may be found on the Project, and will be paid at the bid price for removal of the material. If the materials, after processing, are suitable for other items of work, the Contractor will also be paid for those items in which the material is incorporated except as otherwise provided for in these specifications. He shall replace at his own expense with other acceptable material all of that portion of the materials so removed and used which was needed for use in the embankments, backfills, approaches, or otherwise, including proper allowance for swell when applicable. When existing materials found on the Project, such as crushed stone base, are to be reused directly in the work, the Contractor will not be paid the full Contract Price for the Item, but will be paid at the Contract Price minus the equivalent cost of new materials. The Contractor shall not excavate or remove any material without written authorization from the Engineer. The Contractor shall not make any claim upon the State for damages or loss of anticipated profits because of the expected use of any materials indicated on the Plans as existing and later found to be nonexistent or unfit for use. The Department does not warrant or guarantee the existence, quality, or quantity of materials indicated as existing on the Plans. If any sales tax is involved in materials found on the right-of-way and sold by the Contractor, the Contractor will be responsible for paying same.

Unless otherwise provided, the material from any existing old structure may be used temporarily by the Contractor in the erection of the new structure. Such material shall not be cut or otherwise damaged except with the approval of the Engineer.

Any material used by the Contractor and damaged during use shall be replaced at the Contractor’s expense.

104.07 Final Cleaning Up

Before final acceptance, the highway borrow pits and all ground occupied by the Contractor in connection with The Work shall be cleaned of all rubbish, excess materials, temporary structures, and equipment. All weeds and high grass shall be cut and disposed of. The right-of-way shall be mown when directed by the Engineer in accordance with Subsection 700.3.07. All parts of the Work shall be left in an acceptable condition.

The disposal adjacent to the right-of-way of materials cleaned from the right-of-way will not be permitted, even with the permission of the property owner. Temporary buildings or other structures built for the Contractor’s use and located within view of the right-of-way, constituting a hazard or making an unsightly appearance, shall be removed and disposed of as directed.

On specialty-type Contracts where the entire Work consists of such specialty items as resurfacing, fencing, stripe painting, signing, highway lighting, and the like, the Contractor will not be required to clean up the right-of-way beyond the limits of construction, unless such clean up work is included in the Contract as a Pay Item. However, he shall remove all of his own property and leave the remaining right-of-way in a condition at least as good as it was before The Work was begun.

As to compliance or non-compliance with these provisions, as well as the obligations of the Contractor in relation thereto, the decision of the Chief Engineer shall be final and conclusive.

104.08 Value Engineering Proposals

A. Applicability

This Section applies to those cost reduction proposals initiated and developed by the Contractor for changing the Plans, Specifications, or other requirements of the Contract. These provisions do not apply unless the proposal submitted by the Contractor is specifically identified as being presented as a Value Engineering Proposal (VEP) and the Contract amount is in excess of $50,000.

The cost-reduction Proposals contemplated are those discretionary changes which would require a Supplemental Agreement modifying the Contract and would produce a savings to the Department by providing less costly items or methods than those specified in the Contract without impairing essential functions and characteristics including, but not limited to: service life, reliability, economy of operations, ease of maintenance, and safety, both during and after construction. Proposals must provide a product comparable to the original design at a lower cost or improved quality, or both. No proposals will be accepted that lower the quality of the project.

These provisions are applicable to the prime Contract and include all subcontracts.

B. Documentation

Value Engineering Proposals (VEP) will be processed in the same manner as prescribed for any other alterations of the Contract requiring a Supplemental Agreement.

As a minimum, the following information shall be submitted by the Contractor with each Value Engineering Proposal:

1. A description of the difference between the existing Contract requirement and the proposed change and the comparative advantages and disadvantages of each.
2. An itemization of the requirements of the Contract which must be changed and a recommendation of how to make such change (e.g., a suggested revision).
3. A detailed estimate of the cost of performing the work under the Contract and under the proposed change.
4. A prediction of any effects the proposed changes would have on other costs to the Department, including cost of related items and costs of maintenance and operation.
5. A statement of the time showing the last date by which an agreement for adoption of the proposed changes must be executed in order to obtain the maximum cost reduction during the remainder of the Contract, noting any effect on the Contract completion time or delivery schedule.
6. The dates of any previous or concurrent submissions of the Proposal, the Contract number(s) under which submitted, and the outcome or the result of the proposal in previous projects and any previous actions by the Department, if known.
7. A life-cycle cost analysis.

NOTE: If a VEP is similar to a change in the Plans or Specifications for the Project that is under consideration by the Department at the time said VEP is submitted, or if such VEP is based upon or similar to Standard Specifications, Special Provisions, or Standard Plans adopted by the Department after the advertisement of the Contract, the Engineer will not accept such proposal and the Department reserves the right to make such changes without compensation to the Contractor under the provisions of this Section.

Proposed changes in the basic design of a pavement type (e.g., rigid to flexible or vice versa) or pavement thickness will not be considered as an acceptable VEP. Proposed changes to base/subbase courses may be considered as an acceptable VEP. If design alternates are shown in the plans, the Department will not consider a VEP substituting a design alternate on which the Contractor could have bid for one on which the Contractor has bid. The Department reserves the right to reject any VEP submitted requiring additional Right-of-Way.

C. Submission

Value Engineering Proposals submitted by the Contractor will be processed as expeditiously as possible; however, the Department will not be liable for any delay in acting upon proposals submitted. The Contractor may withdraw, wholly or in part, any VEP not accepted by the Department within the time specified in Subsection 104.08.B.5.

D. Acceptance

The decision of the Engineer as to the acceptance or rejection of a VEP shall be final and shall not be subject to the provisions of Subsection 105.13, "Claims for Adjustments and Disputes."

The Engineer may accept, in whole or in part, before work has been completed, any VEP submitted pursuant to this Subsection and not withdrawn by the Contractor by giving the Contractor written notice thereof reciting acceptance under this Subsection.

E. Notification

The Contractor will be notified in writing of the Department's decision or rejection of each VEP submitted under these provisions. If a proposal is accepted, the necessary Contract modifications will be affected by execution of a Supplemental Agreement. Unless and until a VEP is affected by such Supplemental Agreement, the Contractor shall remain obligated to perform The Work in accordance with the terms of the existing Contract.

Supplemental Agreements made as a result of this Subsection will state that they are made pursuant to it.

F. Sharing

In the event a VEP submitted by the Contractor under this Subsection is accepted, the Supplemental Agreement effecting the necessary modifications will establish the net savings agreed upon and will provide for an adjustment in Contract Prices that will divide the net savings between the Contractor and the Department in accordance with the following provisions:

1. Division of net savings in Contract Price Adjustment:
   - 50 percent of the net savings to the Contractor.
   - 50 percent of the net savings to the Department.
2. The Department reserves the right to include in the agreement any conditions it deems appropriate for consideration, approval, and implementation of the VEP. The Contractor's 50 percent of the net savings shall constitute the full compensation for effecting all changes pursuant to the agreement.

   Development costs incurred by the Contractor and review costs incurred by the Department shall not be considered in computing the net savings of the VEP.
3. Restrictions and Disclosures: Upon acceptance and implementation of any VEP, any restrictions imposed by the Contractor on its use or disclosure of the information submitted shall be void.

   The Department shall thereafter have the right to use, duplicate, and disclose, in whole or in any part, all data necessary in the utilization of the proposal.

Section 105—Control of Work

105.01 Authority of the Engineer

The Engineer will decide all questions that may arise as to the quality and acceptability of materials furnished, work performed, and the rate of progress of The Work; the interpretation of the Plans and Specifications, and all questions as to the acceptable fulfillment of the Contract on the part of the Contractor. The Engineer will determine the quantities of the several kinds of work performed and materials furnished which are to be paid for under the Contract and his determination shall be final.

The Engineer will have the authority to suspend The Work wholly or in part due to the failure of the Contractor to correct conditions unsafe for the workmen or general public; for failure to carry out provisions of the Contract, or for failure to carry out orders; for such periods as he may deem necessary due to unsuitable weather; for conditions considered unsuitable for the prosecution of The Work; or for any other condition or reason deemed to be in the public interest.

The Contractor may request and will receive written instructions from the Engineer upon any important items.

After the Contract has been executed, and before work begins, the Engineer may designate a time and place to hold a Preconstruction Conference with the Contractor. At such time, the Contractor shall furnish the Engineer with a Progress Schedule as provided in Subsection 108.03 unless this schedule has been specifically exempted by Special Provision. The Contractor will also be given a decision on any alternate Traffic Control Plan that he may have previously submitted.

Any matters pertaining to order of work, interpretation of Plans and Specifications, traffic control, utility adjustments, or others, may be discussed at the Preconstruction Conference.

105.02 Plans and Working Drawings

Plans will show details of all structures, lines, grades, typical cross sections of the roadway, location and design of all structures, and a summary of Items appearing in the Proposal.

The Plans will be supplemented by such working drawings as are necessary to adequately control the Work. Working drawings for structures shall be furnished by the Contractor and shall consist of such detailed Plans as may be required to adequately control The Work and which are not included in the Plans furnished by the Department. They shall include stress sheets, shop drawings, erection plans, falsework plans, cofferdam plans, bending diagrams for reinforcing steel or any other supplementary plans, or similar data required of the Contractor. All working drawings must be approved by the Engineer and such approval shall not operate to relieve the Contractor of any responsibility under the contract for the successful completion of The Work. The Contract Bid Prices shall include the cost of furnishing all working drawings.

105.03 Conformity with Plans and Specifications

All Work performed and all materials furnished shall be in reasonably close conformity with the lines, grades, cross sections, dimensions, and material requirements, including tolerances, shown on the Plans or indicated in the Specifications.

Plan dimensions and contract Specification values are to be considered as the target values to be strived for and complied with as the design values from which any deviations are allowed. It is the intent of the Specifications that the materials and workmanship shall be uniform in character and shall conform as nearly as realistically possible to the prescribed target value or to the middle portion of the tolerance range. The purpose of the tolerance range is to accommodate occasional minor variations from the median zone that are unavoidable for practical reasons. When either a maximum and minimum value or both are specified, the production and processing of the material and the performance of the work shall be so controlled that material or work will not be preponderantly of borderline quality or dimension.

In the event the Engineer finds the materials or the finished product in which the materials are used not within reasonably close conformity with the Plans and Specifications, but that reasonably acceptable work has been produced, the Engineer shall then make a determination if the work shall be accepted and remain in place. In this event, except in cases where the appropriate price adjustments are provided for in the Specifications covering the materials and/or the finished product, a Supplemental Agreement will be executed documenting the basis of acceptance that will provide for an appropriate price adjustment in the Contract Price for such work or materials as the Engineer deems necessary to conform to his determination based on engineering judgement.

In the event the Engineer finds the materials or the finished product in which the materials are used or the work performed are not in reasonably close conformity with the Plans and Specifications, and have resulted in an inferior or unsatisfactory product, the work or materials shall be removed and replaced or otherwise corrected by and at the expense of the Contractor.

105.04 Coordination of Plans, Specifications, Supplemental Specifications, and Special Provisions

These *Standard Specifications*, the Supplemental Specifications, the Plans, Special Provisions, and all supplementary documents are essential parts of the Contract, and a requirement occurring in one is as binding as though occurring in all. They are intended to be complementary and to describe and provide for a complete work.

In cases of discrepancy, the governing descending order will be as follows:

1. Special Provisions
2. Project Plans including Special Plan Details
3. Supplemental Specifications
4. Standard Plans including Standard Construction Details
5. Standard Specifications

Calculated dimensions will govern over scaled dimensions.

The Contractor shall take no advantage of any apparent error or omission in the Plans or Specifications. In the event the Contractor discovers such an error or omission, he shall immediately notify the Engineer. The Engineer will then make such corrections and interpretations as may be deemed necessary for fulfilling the intent of the Plans and Specifications.

A. Specifications of Other Organizations

When work is specified to be done or when materials are to be furnished according to the published specifications of organizations other than the Department, the latest specifications published by those organizations at the time bids are received shall apply unless otherwise specified.

AASHTO Interim Specifications and ASTM Tentative Specifications will be considered effective on date of issue.

B. Item Numbers

The first three digits of any Item Number in the itemized Proposal designates the Specification section under which the Item shall be constructed.

105.05 Cooperation by Contractor

The Contractor will be supplied with a minimum of two sets of approved Plans and Contract assemblies including Special Provisions, one set of which the Contractor shall keep available on the project site at all times.

The Contractor shall give The Work the constant attention necessary to facilitate the progress thereof, and shall cooperate with the Engineer, Inspectors, and other Contractors in every way possible.

The Contractor shall have accessible to the Engineer at all times, as his agent, a competent Superintendent, capable of reading and thoroughly understanding the Plans and Specifications, and thoroughly experienced in the type of work being performed, who shall receive instructions from the Engineer or his authorized representatives. The Superintendent shall have full authority to execute orders or directions of the Engineer without delay and to promptly supply such materials, equipment, tools, labor, and incidentals as may be required. Such superintendence shall be furnished irrespective of the amount of work sublet.

The Superintendent shall notify the Engineer prior to starting any Pay Item Work. The Prime Contractor shall coordinate and be responsible to the Engineer for all activities of subcontractors.

105.06 Cooperation with Utilities

The Department will notify all utility companies, all pipeline owners, all railroad companies, or other parties affected of Award of the Contract, giving the name and address of the Contractor, and will assist the Contractor in arranging for all

necessary adjustments of the public or private utility fixtures, pipe lines, and other appurtenances within or adjacent to the limits of construction.

Water lines, gas lines, wire lines, service connections, water and gas meter boxes, water and gas valve boxes, light standards, cableways, signals, railroad facilities, and all other utility appurtenances within the limits of the proposed construction which are to be relocated or adjusted are to be moved by the owners at their expense, except as otherwise provided for elsewhere in the Contract.

It is understood and agreed that the Contractor has considered in his bid all of the permanent and temporary utility appurtenances in their present location or relocated positions, and that no additional compensation will be allowed for any delays, inconvenience, or damage sustained by him due to any interference from said utility appurtenances or the operation of moving them. Delays and interruptions to the controlling Item or Items of The Work are covered in Subsection 107.21.G.

It shall be the Contractor's responsibility to plan with each utility owner a schedule of operations which will clearly set forth at which stage of the Contractor's operations the utility owner will be required to perform his removal and relocation work.

105.07 Cooperation Between Contractors

The Department reserves the right at any time to Contract for and perform other or additional work on or near The Work covered by the Contract.

When separate Contracts are let within the limits of any one Project, each contractor shall conduct his work so as not to interfere with or hinder the progress or completion of The Work being performed by other Contractors. Contractors working on the same Project shall cooperate with each other.

Each Contractor involved shall assume all liability, financial or otherwise, in connection with his Contract and shall protect and save harmless the Department from any and all damages or claims that may arise because of inconvenience, delay, or loss experienced by him because of the presence and operations of other Contractors working within the limits of the same Project.

The Contractor shall arrange his work and shall place and dispose of the materials being used so as not to interfere with the operations of the other contractors within the limits of the same Project. He shall join his work with that of the others in an acceptable manner and shall perform it in proper sequence to that of the others. At the request of the Structure Contractor, the Engineer will designate an area within the right-of-way, adjacent to each structure, to be reserved for use by the Structure Contractor for Storage of Equipment and Materials necessary to construct the particular structure. So long as he occupies this area, the Structure Contractor shall be responsible for its maintenance. The Structure Contractor must relinquish this area, however, as it becomes practical to utilize completed portions of the structure.

105.08 Construction Stakes, Lines and Grades

(Subsection 105.08 Omitted)

105.09 Authority and Duties of the Resident Engineer

The Resident Engineer, regardless of his administrative title, is the Engineer designated by the Department to be the direct representative of the Chief Engineer. The Resident Engineer has immediate charge of the engineering details of each construction Project, and is responsible for contract administration. Such administration includes the designation of subordinates to represent him and make routine decisions. The Resident Engineer has the authority to reject defective material and to suspend any work that is being improperly performed.

105.10 Duties of the Inspector

Inspectors employed by the Department are authorized to inspect all work done and materials furnished. Such inspection may extend to all or any part of The Work and to the preparation, fabrication, or manufacture of the materials to be used. The Inspector will not be authorized to alter or waive the provisions of the Contract. The Inspector will not be authorized to issue instructions contrary to the Plans and Specifications or to act as foreman for the Contractor.

105.11 Inspection of the Work

All materials and each part of the detail of The Work shall be subject to inspection by the Engineer.

The Engineer shall be allowed access to all parts of The Work and shall be furnished with such information and assistance by the Contractor as is required to make a complete and detailed inspection.

Upon the Engineer's request, the Contractor, at any time before Final Acceptance of the project, shall remove or uncover such portions of the finished work as may be directed. After examination, the Contractor shall restore said portions of The Work to the standard required by the Specifications. Should The Work thus exposed or examined prove acceptable, the uncovering or removing and the replacing of the covering or making good of the parts removed will be paid for as Extra Work; but should the work so exposed or examined prove unacceptable, the uncovering, or removing and the replacing of the covering or making good of the parts removed will be at the Contractor's expense.

Any work done or materials used without supervision or inspection by an authorized Department representative may be ordered removed and replaced at the Contractor's expense, unless the Department representative failed to inspect after having been given reasonable notice in writing that The Work was to be performed.

When any unit of government or political subdivision or any railroad corporation is to pay a portion of the cost of The Work covered by the Contract, its respective representatives shall have the right to inspect The Work. Such inspection shall in no sense make any unit of government or political subdivision or any railroad corporation a party to the Contract and shall in no way interfere with the rights of either party hereunder.

105.12 Removal of Unacceptable and Unauthorized Work

All work that does not conform to the requirements of the Contract will be considered unacceptable unless otherwise determined acceptable under the provisions in Subsection 105.03.

Unacceptable work, whether the result of poor workmanship, use of defective materials, damage through carelessness, or any other cause found to exist prior to the Final Acceptance of The Work, shall be removed immediately and replaced in an acceptable manner.

Except as elsewhere noted, no work shall be done without lines and grades having been given by the Engineer. Work done contrary to the instructions of the Engineer, work done beyond the lines shown on the Plans or as given, except as herein specified, or any Extra Work done without authority will be considered as unauthorized and will not be paid for under the provisions of the Contract. Work so done may be ordered removed or replaced at the Contractor's expense.

Upon failure on the part of the Contractor to comply forthwith with any order of the Engineer made under the provisions of this section, the Engineer will have authority to cause unacceptable work to be remedied or removed and replaced and to cause unauthorized work to be removed, and to deduct the costs from any monies due or to become due the Contractor.

105.13 Claims for Adjustments and Disputes

Whenever the Contractor believes that it is or will be entitled to additional compensation, whether due to delay, extra work, breach of contract, or other causes, the Contractor shall follow the procedures set forth in this Sub-Section.

A. Claims For Acceleration

The Department shall have no liability for any constructive acceleration. If the Department gives express written direction for the Contractor to accelerate its effort, then both parties shall execute a Supplemental Agreement as provided in Subsection 104.03.

B. Claims For Delay and All Other Claims Except Acceleration

1. The Department shall have no liability for damages beyond those items which are specifically payable under this Sub-Section.
2. The Department will be liable only for those delay damages caused by or arising from acts or omissions on the part of the Department which violate legal or contractual duties owed to the Contractor by the Department. The Contractor assumes the risk of damages from all other causes of delay.

3. The parties recognize that delays caused by or arising from right of way problems, defects in plans or design, redesign, changes in The Work by the Department, the actions of suppliers or other Contractors, the shop-drawing approval process, injunctions, court orders and other such events, forces or factors are commonly experienced in highway construction work. Such delays shall not constitute breaches of the Contract. However, such delays may constitute a basis for a claim for delay damages, if found to be in accordance with Subsection 105.13.B.2 above and other provisions of the Contract, and/or a request for a time extension.
4. The term "delay" shall be deemed to mean any event, action, force or factor which extends the Contractor's time of performance. This Subsection is intended to cover all such events, actions, forces or factors, whether they be styled "delay," "disruption," "interference," "impedance," "hindrance", "impact" or otherwise.

5. Compliance with the provisions of Subsection 105.13 will be an essential condition precedent to any recovery of damages by the Contractor.
6. The following items, and only the following items, may be recoverable by the Contractor as "damages:
   a. Additional direct hourly rates paid to employees for job site labor, including payroll taxes, welfare, insurance, benefits and all other labor burdens.
   b. Documented additional costs for materials.
   c. Additional equipment costs, as determined in accordance with this Sub-Section.
   d. Documented costs of extended job-site overhead. (Not applicable for claims other than delay claims.)
   e. An additional 15 percent of the total of Subsections 105.13.B.6. a, b, c and d, which sum includes home office overhead and profit.
   f. Bond costs.
   g. Subcontractor costs, as determined by, and limited to, those items identified as payable under Subsection 105.13.B.6. a, b, c, d, e, and f.

7. For purposes of computing additional equipment costs, rates used shall be based on the Contractor's actual experienced cost for each piece of equipment. These rates shall be supported by equipment cost records furnished by the Contractor. In no case will equipment rates be allowed in excess of 70% of those determined utilizing the "Rental Rate Blue Book," with the appropriate adjustments noted in Subsection 109.05

8. The parties agree that, in any claim for damages, the Department will have no liability for the following items of damages or expense:
   a. Profit, in excess of that provided herein.
   b. Loss of profit.
   c. Labor inefficiencies, except as allowed under Subsection 105.13.B.6.a.
   d. Home office overhead in excess of that provided herein.
   e. Consequential damages, including but not limited to loss of bonding capacity, loss of bidding opportunities and insolvency.
   f. Indirect costs or expenses of any nature.
   g. Attorneys fees, claims preparation expenses, or costs of litigation.
   h. Interest of any nature.

9. NOTICE OF POTENTIAL CLAIM: In any case in which the Contractor believes that it will be entitled to additional compensation, the Contractor shall notify the Engineer in writing of its intent to claim such additional compensation. Such notice shall be given in order that the Department can assess the situation, make an initial determination as to who is responsible, and institute appropriate changes or procedures to resolve the matter.
   a. Claims for Delay - The Department shall have no liability for any delay which occurred more than one week prior to the filing of such written notice. Failure of the Contractor to give such written notice in a timely fashion will be grounds for denial of the claim.
   b. All Other Claims Except Acceleration and Delay - If the Contractor does not file such written notice before beginning the work out of which such claim arises, then the Contractor hereby agrees that it shall have waived any additional compensation for that work and the Contractor shall have no claim thereto.

10. RECORDS: After filing a "Notice of Potential Claim", the Contractor shall keep daily records of all labor, material, and equipment costs incurred for operations affected. These daily records shall identify each operation affected and the specific locations where work is affected. The Department will also keep records of all labor, material, and equipment used on operations affected. At the time and place, as designated by the Engineer, on Monday, or the first work day, of each week following the date of filing a "Notice of Potential Claim", the Contractor shall meet with the Department's representative and present the daily records for the preceding week. If the Contractor's records indicate costs greater than those kept by the Department, the Department will present its records to the Contractor. The Contractor shall notify the Engineer in writing within three (3) work days of any inaccuracies noted in, or disagreements with, the Department's records. Refusal or repeated failure by the Contractor to attend these weekly meetings and present its records will constitute a waiver by the Contractor of any objections as to the accuracy of the Department's records. When the Contractor makes an objection as to the accuracy of the Department's records, the Engineer shall review the matter, and correct any inaccuracies he finds in the Department's records. For purposes of computing damages, the Department's records will control.

    In the event the Contractor wishes to contest the accuracy of the Department's records, it may file a petition pursuant to Rule 672-1-.05 of the Official Rules and Regulations of the Department of Transportation. The decision of the Engineer, or, if contested, the decision of the Agency, will be final and binding upon the parties as to any objections to the accuracy of the Department's records, subject to the Contractor's right to judicial review under O.C.G.A. Section 50-13-19.

11. On a weekly basis after filing a "Notice of Potential Claim" for delay damages, the Contractor shall prepare and submit to the Engineer written reports providing the following information:
    a. Potential effect to the schedule caused by the delay.
    b. Identification of all operations that have been delayed, or are to be delayed.
    c. Explanation of how the Department's act or omission delayed each operation, and estimation of how much time is required to complete the project.
    d. Itemization of all extra costs being incurred, including:
        1) An explanation as to how those extra costs relate to the delay and how they are being calculated and measured.
        2) Identification of all project employees for whom costs are being compiled.
        3) Identification of all manufacturer's numbers of all items of equipment for which costs are being compiled.

C. Required Contents of Claims

All claims shall be submitted in writing, and shall be sufficient in detail to enable the Engineer to ascertain the basis and the amount of each claim. The claim submission shall include six (6) printed copies and one (1) digital copy on Recordable disk. All information submitted to the Department under this Subsection will be used exclusively for analyzing the claim, resolving the claim or any litigation which might arise from the claim. At a minimum, the following information shall be provided:

1. A description of the operations that were delayed, the reasons for the delay, how they were delayed, including the report of all scheduling experts or other consultants, if any. (Not applicable for claims other than delay claims)
2. An as-built chart, CPM scheme or other diagram depicting in graphic form how the operations were adversely affected. (Not applicable for claims other than delay claims except where an extension of time is sought)
3. A detailed factual statement of the claim providing all necessary dates, locations and items of work affected by the claim.
4. The date on which actions resulting in the claim occurred or conditions resulting in the claim became evident.
5. A copy of the "Notice of Potential Claim" filed for the specific claim by the Contractor.
6. The name, function, and activity of each Department official, or employee, involved in, or knowledgeable about facts that gave rise to such claim.
7. The name, function, and activity of each Contractor or Subcontractor official, or employee, involved in, or knowledgeable about facts that gave rise to such claim.
8. The identification of any pertinent documents, and the substance of any material oral communication relating to such claim.
9. A statement as to whether the additional compensation or extension of time sought is based on the provisions of the Contract or an alleged breach of Contract.

10. The specific provisions of the Contract which support the claim, and a statement of the reasons why such provisions support the claim.
11. The amount of additional compensation sought and a break-down of that amount into the categories specified as payable under Subsection 105.13.B.6, above.
12. If an extension of time is also sought, the specific days for which it is sought and the basis for such request.

D. Required Certification of Claims

When submitting the claim, the Contractor shall certify in writing, under oath in accordance with the formalities required by Georgia law, as to the following:

1. That the claim is made in good faith.
2. That supportive data are accurate and complete to the Contractor's best knowledge and belief that the amount of the claim accurately reflects what the Contractor in good faith believes to be the Department's liability.

The Contractor shall use the CERTIFICATE OF CLAIM form, which can be obtained from the Department, in complying with these requirements.

E. Auditing of Claims

All claims filed against the Department shall be subject to audit at any time following the filing of such claim, whether or not such claim is part of a suit pending in the courts of this State. The audit may be performed by employees of the Department or by an independent auditor on behalf of the Department. The audit may begin on ten days notice to the Contractor, Subcontractor, or Supplier. The Contractor, Subcontractor, or Supplier shall make a good faith effort to cooperate with the auditors. Failure to cooperate with the auditor shall constitute a waiver by the Contractor of the claim in its entirety. Failure of the Contractor, Subcontractor, or Supplier to maintain and retain sufficient records to allow the Department's auditor to verify the claim shall constitute a waiver of that portion of such claim that cannot be verified and shall bar recovery thereunder. If the claim is part of a suit pending in a court of this state or if the claim becomes a part of a suit in a court of this state, the questions of whether the Contractor has cooperated with the auditor or failed to maintain and retain sufficient records to allow the auditor to verify the claim shall be questions for determination by the judge without the assistance of a jury.

Without limiting the generality of the foregoing, and as a minimum, the auditors shall have available to them the following documents:

1. Daily time sheets and foreman's daily reports.
2. Project payroll register.
3. Profit and loss statements for the Project.
4. Payroll tax returns.
5. Material invoices, purchase orders, and all material and supply acquisition contracts for the Project.
6. Material cost distribution worksheet for the Project.
7. Equipment records (list of company equipment, rates, etc.)
8. Vendor rental agreements, and subcontractor invoices.
9. Subcontractor payment certificates.
10. Canceled checks (payroll and vendors) for the Project.
11. Job cost report for the Project.
12. Job payroll ledger for the Project.
13. General ledger, general journal, (if used) and all subsidiary ledgers and journals together with all supporting documentation pertinent to entries made in these ledgers and journals.
14. Cash Disbursements journal for the Project.
15. Certified financial statements for all years reflecting the operations on this project.
16. Depreciation records on all company equipment whether such records are maintained by the company involved, its accountant, or others.
17. If a source other than depreciation records is used to develop costs for the Contractor's internal purposes in establishing the actual cost of owning and operating equipment, all such other source documents.
18. All documents which relate to each and every claim together with all documents which support the amount of damages as to each claim.

19. Worksheets used to prepare the claim establishing the cost components for items of the claim including, but not limited to, labor, benefits and insurance, materials, equipment, subcontractors, and all documents which establish the time periods, individuals involved, the hours and the rates for the individuals.

F. Mediation

After compliance by the Contractor with parts B., C., D. and E. of Subsection 105.13 and if the Contractor's claim has been disallowed in whole or in part, then the Contractor may, within 30 calendar days from receipt of the ruling of the Engineer, make a written request to the Engineer that the claim or claims be referred to mediation.

If requested in accordance with this specification, mediation shall be granted by the Department. In which case, within 30 days of receipt by the Department of the Contractor's request for mediation, the Contractor and the Department will meet to select a mediator. The mediator will then schedule the mediation at a place, time, and earliest date agreeable to the Contractor and the Department.

The Contractor and the Department mutually agree that mediation shall be a condition precedent to the filing of any lawsuit concerning claims or alleged breaches of the Contract. The costs and expenses of the mediator, selected by mutual agreement of the parties, will be divided equally between the Department and the Contractor. Each party to the mediation shall bear its own costs of preparing for and participating in the mediation.

G. Remedies Exclusive

In the event any legal action is instituted against the Department by the Contractor on account of any claim for additional compensation, whether on account of delay, acceleration, breach of contract, claimed extra work, or otherwise, the Contractor agrees that the Department's liability will be limited to those items which are specifically identified as payable in Sub-Section 105.13.

105.14 Maintenance During Construction

The Contractor shall maintain the project during construction and until the Project is accepted. This maintenance shall constitute the continuous and effective work prosecuted day by day, with adequate equipment and forces to the end that all areas of the project are kept in satisfactory condition at all times.

The Contractor’s area of responsibility for maintenance is confined to the physical construction limits plus any areas affected by the Contractor’s activities. Once maintenance acceptance or final acceptance has been made, the Contractor is no longer responsible for damage to The Work other than that attributable to the Contractor’s actions or inadequate construction.

In case of separate contracts, each Contractor shall be responsible for any damage to the completed work of others caused by his actions or negligence. Where the work of one Contractor has been accepted by the Department, the Contractor performing subsequent work in the area shall be responsible for the maintenance and protection of all work previously completed.

If separate bridge contracts are let within the limits of a Roadway Project and the Bridge Contractor completes his Contract before the Roadway Contractor, the Bridge Contract may be accepted and the Roadway Contractor will be responsible for maintenance of the new bridge until it is opened to traffic. If the Roadway Contractor hauls materials across the bridge the Roadway Contractor shall protect the endposts, deck surface, deck edges, joints, and all other vulnerable features of the bridge by use of adequate timber or earth cushions as directed by the Engineer. The Roadway Contractor shall repair all damage caused by such use, including resealing of joints and rerubbing of finish at his own expense.

All cost of maintenance work during construction and before the Project is accepted shall be included in the Unit Prices Bid on the various Pay Items and the Contractor will not be paid an additional amount for such work except as provided in Subsection 104.05.B.

The Contractor shall not allow vegetative growth at any time to obstruct signs, delineation, traffic movements, or sight distance. The Contractor shall at intervals not to exceed six months, clean up and remove litter and debris; remove weeds from around guardrail, barrier, poles, standards, utility facilities, and other structures; and cut or trim trees, bushes or tall grass. These requirements shall apply to all areas within the project termini and lateral limits.

105.15 Failure to Maintain Roadway or Structures

If at any time, the Contractor fails to comply with the provisions of Subsection 105.14, the Engineer will immediately notify the Contractor of such noncompliance. If the Contractor fails to remedy the unsatisfactory maintenance within 48 hours after receipt of such notice, the Engineer may immediately proceed to maintain The Work, and the entire cost of this maintenance will be deducted from monies due or to become due the Contractor under the Contract. As an alternative to the Engineer's maintaining the Work, all the Items and quantities of work done, but not properly maintained, may be deducted from the current progress estimate, even if such Items have been paid for in a previous estimate.

105.16 Final Inspection and Acceptance

Upon due written notice from the Contractor of substantial completion of the entire Project, the Engineer will determine if the Project is ready for a Final Inspection. The Engineer will have the final decision on when the Project is substantially complete and thereby ready for a Final Inspection. If the Engineer finds the Project substantially complete the Engineer will schedule the Final Inspection. If all construction provided for and contemplated by the Contract is found completed to the Engineer's satisfaction and all documents required in connection with the Project have been submitted by the Contractor, the Engineer will make the Final Acceptance and notify the Contractor in writing of this acceptance.

If, however, the Final Inspection discloses any work, in whole or part, as being unsatisfactory, the Engineer will provide the Contractor with a written punch-list that includes the necessary instructions for correction of same. The punch-list will also include any remaining work to be completed and any final reports and other documentation required to be submitted by the Contractor. The Contractor shall immediately comply with and execute such instructions. When all construction provided for and contemplated by the Contract is found completed to the Engineer's satisfaction, including submission of any required documentation, the Engineer will make the Final Acceptance and notify the Contractor in writing of this acceptance.

When the Contractor has finished a major portion of the Contract, the Contractor may request that a semi-final inspection be made. At the discretion of the Engineer, who shall be sole judge as to making the inspection, if the work is satisfactory, as described in the first paragraph of this Section, that portion of the Contract may be accepted, opened to traffic, if not already carrying traffic, and the Contractor relieved of the maintenance obligations as described elsewhere in these Specifications.

Such partial acceptance shall in no way relieve the Contractor of responsibility for satisfactory completion of the Contract, or for failure of any portion of the accepted work prior to Final Acceptance of the Project.

Section 106—Control of Materials

106.01 Source of Supply and Quantity of Materials

The materials used in The Work shall meet all quality requirements of the Contract. Materials will not be considered as finally accepted until all tests, including any to be taken from the finished Work have been completed and evaluated. To expedite the inspection and testing of materials, the Contractor shall notify the Engineer in writing of his proposed sources of materials at least 2 weeks before delivery, or earlier if blend determinations or mix designs are required. When required, representative preliminary samples of the character and quality prescribed shall be submitted for examination and testing. The approval of preliminary samples does not obligate the Engineer to accept materials from the same source delivered later. If, after trial, it is found that sources of supply for previously approved materials do not produce uniform and satisfactory products, or if the product from any source proves unacceptable at any time, the Contractor shall furnish materials from other sources. The Engineer shall have the right to reject the entire output of any source from which he finds it is impractical to secure a continuous flow of uniformly satisfactory material.

Upon request by the Department, the Contractor shall furnish formal written invoices from the materials suppliers.

The invoice shall show the date shipped, the quantities, and the unit prices.

The Contractor shall purchase materials from suppliers who are willing for the Contractor to furnish the Department copies of invoices as noted herein upon request by the Department.

Materials used and operations performed under Section 400- Hot Mix Asphaltic Concrete Construction, shall be controlled and tested by the Contractor. This shall be done in such a manner as to produce a uniform product that meets Specification

requirements. In the event the Contractor's quality control procedures do not achieve the desired objective, operations shall be suspended until satisfactory results are obtained.

The Contractor's quality control personnel shall be properly instructed and trained to perform all tests and make calculations, and shall be competent to control all processes so that the requirements are met.

106.02 Unacceptable Material

All material not conforming to the requirements of the Specifications will be considered as unacceptable. All unacceptable materials, whether in place or not, will be rejected and shall be removed immediately from the site of The Work unless otherwise directed by the Engineer. In case of failure by the Contractor to comply promptly with any order by the Engineer to remove rejected materials, the Engineer shall have authority to have such rejected materials removed by other means and to deduct the expense of such removal from any monies due, or to become due, to the Contractor. No rejected materials, the defects of which have been corrected, shall be used until the Engineer has given approval.

106.03 Samples, Tests, Cited Specifications

All materials will be inspected, tested, and approved by the Engineer before incorporation into The Work. Samples will be taken by a qualified representative of the Department. Unless otherwise designated, tests will be made by and at the expense of the Department and in accordance with methods of AASHTO, ASTM, or the published Specifications of any other designated organization that are current on the date of advertisements for bids. Copies of all tests will be furnished to the Contractor's representative at his request. Sampling and testing by the Department will be performed in accordance with the *Sampling, Testing and Inspection Manual*.

For work performed under Section 400- Hot Mix Asphaltic Concrete Construction all materials shall be inspected and tested by the Contractor before incorporation into The Work. The Contractor's Quality Control Technician shall sample and test all quality control samples. The Contractor's quality control tests may be used as acceptance tests at the discretion of the Engineer. Sampling and testing by the Contractor shall be performed according to the Sampling, Testing, and Inspection Manual. Copies of all tests performed by the Contractor shall be furnished to the Engineer and will become a part of the project records. The Department will be responsible only for determining the acceptability of the construction and materials incorporated therein. The Contractor shall be responsible for the quality of the construction and materials incorporated therein. The Department will monitor the Contractor's Quality Assurance Acceptance Program to verify test accuracy.

A. Testing and Acceptance Plans

1. **A Lot:** Work will be accepted on a Lot-to-Lot basis in accordance with the requirements specified in the Acceptance Plans specified in Section 400- Hot Mix Asphaltic Concrete Construction. Lot sizes will normally be specified. In the event, however, that operational conditions cause work to be interrupted, or only partially completed before the Lot size specified has been achieved, the Lot may be redefined by the Engineer as being either the amount of work accomplished within the day, or he may combine that work with the next Lot of work. A Lot is set forth in these Specifications as a defined quantity of a specified material from a single source or a measured amount of specified construction assumed to be produced by the same process.

2. **Acceptance Plans:** The Acceptance Plan for a material, product, or an Item of construction, or completed work will be as specified hereinafter in Section 400 and Section 430 of these Specifications. However, in addition to the following conditions, the Department reserves the right to test any additional material for work that appears defective and to require correction if necessary prior to Final Acceptance of the Project.

3. **Resampling of Lots:** It is the intent of these Specifications that Lots of materials, products, Items of construction, or completed construction will meet Specification requirements at the time of submission. Resampling of deficient Lots as a basis for check tests may be done by the Engineer at his option.

   Non-conforming Lots, which can be corrected by reworking, will not be re-sampled before such corrective action is taken. Sampling and testing of reworked areas shall be at the expense of the Contractor.

4. **Acceptance or Rejection:** Nonconforming Lots, materials, products, or Items of construction that are not adaptable to correction by reworking shall be removed and replaced, accepted without payment, or accepted at an adjusted price as stated in the Specifications, or if not stated, as directed by the Engineer.

Following the application of the Acceptance Plan, the decision of the Engineer shall be final as to the acceptance, rejection, or acceptance at an adjusted price of the Lots unless the Contractor elects to remove and replace any deficient materials or work at his expense.

5. **Adjusted Payment**:
   a. **Single Deficiency:** A single deficiency is defined as a deficiency involving one characteristic of a material within a Lot. In the case of single-characteristic deficiency, it shall be used directly to determine an adjusted Contract Price.
   b. **Multiple Deficiency:** A multiple deficiency is defined as deficiencies involving more than one characteristic of construction within a Lot. In the case of multiple deficiencies, the related adjusted percentage of Contract Price for each characteristic shall be determined and the greatest reduction in price shall be used to determine the Contract Unit Price to be paid. Should the total adjustment for any individual Lot be 50 percent or more, the Engineer will determine whether the deficient Lot should be removed and replaced or allowed to remain in place. No payment will be made for the original Lot or for its removal. Replacement of the Lot will be paid for in accordance with the provisions for the Item.

106.04 Plant Inspection

At the option of the Engineer, materials may be sampled and tested at the source of supply. In the event plant inspection is undertaken, the following conditions shall be met:

A. The Engineer shall have the cooperation and assistance of the Contractor as well as the Contractor's material supplier.

B. The Engineer shall have full entry at all times to such parts of the plant as may concern the manufacture or production of the materials being furnished.

C. If specified in the Proposal, the Contractor shall arrange for an approved building for the use of the inspector; such building to be located conveniently near the plant, independent of any building used by the material producer, and conforming to the requirements of Subsection 106.11 and Section 152.

D. Adequate safety measures shall be provided and maintained. This shall include sampling valves on storage tanks for bituminous materials and safety stands for use in sampling from truck beds.

E. It is understood that the Department reserves the right to retest all materials which, prior to incorporation into The Work, have been tested and accepted at the source of supply and after the same have been delivered. The Department further reserves the right to reject all materials which, when retested, do not meet the requirements of the Contract Specifications.

106.05 Materials Certification

For certain products, assemblies, and materials, in lieu of normal sampling and testing procedures by the Contractor and the Department, the Engineer may accept from the Contractor the manufacturer's certification with respect to the product involved, under the conditions set forth in the following paragraphs:

A. The certification shall state that the named product conforms to the Department's requirements and that representative samples thereof have been sampled and tested as specified.

B. The certification shall either:
   1. Be accompanied with a certified copy of the test results, or
   2. Certify that such test results are on file with the manufacturer and will be furnished to the Engineer upon demand.

C. The certification shall give the name and address of the manufacturer and the testing agency and the date of tests, and shall set forth the means of identification which will permit field determination of the product delivered to the project as being the product covered by the certification.

D. The certification shall be in duplicate with one copy to be sent with the shipment of the covered product to the Department's Project Engineer, and with one copy sent to Office of Materials, 15 Kennedy Drive Forest Park, Georgia 30297.

   No Certificate will be required for Portland Cement when furnished from a manufacturer approved by the Department.

E. The Department will not be responsible for any costs of certification or for any costs of the sampling and testing of products in connection therewith.

F. The Department reserves the right to require samples and to test products for compliance with pertinent requirements irrespective of prior certification of the products by the manufacturer. Any materials that fail to meet specification requirements will be rejected.

106.06 Agricultural Lime and Fertilizer

The sale and distribution of Fertilizers and Agricultural Lime are governed by Acts of the Georgia General Assembly and Rules and Regulations of the State Department of Agriculture.

Therefore, either of these materials may be sampled by authorized representatives of the State Commissioner of Agriculture. The Contractor may use these materials in The Work without sampling provided he notifies the Engineer 48 hours in advance of anticipated delivery to the job site. The Engineer reserves the right to request random sampling by a representative of the State Department of Agriculture.

The Contractor will not be expected to withhold application pending completion of tests, but will not be relieved of the responsibility for the quality of the material furnished. In the event a sample fails to meet the requirements of the Georgia Law as evidenced by a report furnished by the Commissioner of Agriculture, the Engineer will deduct from monies due to the Contractor a sum equal to the penalty authorized by the above referenced Act.

106.07 Sample Holes

All holes dug or drilled for the purpose of taking samples or determining thickness any time before Final Acceptance of the Project shall be repaired by the Contractor.

The material replaced shall be compacted and finished to the satisfaction of the Engineer. Costs of this work shall be included in the appropriate Bid Items.

106.08 Storage of Materials

Portions of the right-of-way, approved by the Engineer, may be used for material storage purposes and for the placing of the Contractor's plant and equipment. Additional space required must be provided by the Contractor at no additional expense to the Department. Private property shall not be used for storage purposes without written permission of the owner or lessee, and if requested by the Engineer, copies of such written permission shall be furnished.

Materials shall be stored to assure the preservation of their quality and fitness for The Work, and shall be located so as to facilitate their prompt inspection. Stored materials, even though approved before storage, may again be inspected before their use in The Work.

All storage sites shall be restored to their original condition by the Contractor at no additional expense to the Department.

No inflammable materials or harmful chemicals shall be stored within 200 ft (60 m) of a structure nor within 200 ft (60 m) of a roadway open to traffic. Such materials shall be stored in accordance with directions from the manufacturer.

106.09 Handling Materials

All materials shall be handled in such a manner as to preserve their quality and fitness for The Work. Aggregates, and mixtures of aggregates with other materials, shall be transported from the storage site to The Work in tight vehicles so constructed as to prevent loss or segregation of materials after loading and measuring in order that there may be no inconsistency in the qualities of the materials intended for incorporation into The Work as loaded and the qualities as actually received at the place of operation. The actual incorporation of the material in The Work shall be such that the quality and fitness of the material is retained and no segregation results.

106.10 Local Material Sources

A. Sources Shown on the Plans

Possible sources of local materials and/or disposal areas may be designated on the Plans. The quality of materials in such deposits will be acceptable in general but the Department does not warrant either the quality or the quantity of materials shown on the Plans. The Contractor shall determine the amount of equipment and work required to produce a material meeting the Specifications. Pit mixing, selective excavation, and other such operations shall be expected and the

Contractor shall determine the extent of these activities. It shall be understood that it is not feasible to ascertain from samples the limits for an entire deposit and that variations in quality and quantity shall be considered as usual and are to be expected.

1. When easements to secure local materials and/or disposal areas are obtained by the Department, the Plans will show the locations of the pits or areas, the amount of royalties and other costs and conditions of acquisition of the material. In all cases where the Department has secured easements for material pits and/or disposal areas, these easements will be assigned to the Contractor who shall make prompt payment to the owners of such pits for all royalty and crop damage costs for materials and/or areas, and who shall further fulfill all of the terms of the Easement. The Department does not warrant the title or any interest of the property owner in such Easements.
2. If the Contractor elects to use only a portion of the materials or area estimated to be available in any pit or disposal area, or only clears or partially clears the pit or area, and does not remove or deposit any material, he shall make a minimum payment to the property owner of at least 33-1/3 percent of the estimated value of the pit or areas as shown in the Easement, plus any crop damage costs called for by the Easement.

   The Contractor shall, before receiving final payment from the Department, submit to the Engineer a written statement signed by the owner stating that the owner has been paid in full and that all conditions agreed to have been fulfilled to the satisfaction of the owner. The Department will not take any separate payment to the Contractor for these material acquisition costs except that reclamation of the pit or area, if required, will be paid for in accordance with Section 160.

   Should the Contractor fail to pay the property owner within 60 days after ceasing to use the pit or area, the Department may pay directly to the property owner any amounts due and deduct same from any funds due the Contractor. This provision does not affect the obligation of the Contractor under his Bond or the rights of the property owner or the Department under the Bond.

B. Substitution of Sources of Materials

1. If, after the Contract is awarded, the Contractor wishes to substitute other sources for sources designated on the Plans, he may do so provided the material to be substituted conforms to the Specifications. The Contractor shall make all necessary arrangements with the property owners for removal of the material from substituted pits. Payment will be made for Clearing and Grubbing, Stripping Excavation, Pit Reclamation, and Ditch Excavation only to the extent required for pits shown in the Plans. This does not relieve the Contractor from planting a satisfactory cover crop of the type called for on the Plans or required by the Specifications on all scarred areas created by the removal of materials.

   In the event the Contractor substitutes a source for soil-cement, soil-bituminous, or other material to be stabilized, and the Engineer determines that the substitute source requires more stabilizing agent than the Plan pit, no payment will be made for the additional stabilizing agent required.
2. Substitution sources will not be allowed where the resulting scars will present an unsightly appearance from any State or Federal highway.

C. Material Pits Furnished By the Contractor

When sources of any, or all, local materials are not shown on the Plans, or when location maps of possible sources of materials are shown on the Plans for information but no Easements are obtained, the Contractor shall provide sources of material meeting Contract requirements and acceptable to the Engineer. The Contractor shall make arrangements with the property owner regarding rights to remove material from the pits but prior to Final Acceptance of the Project by the State, the Contractor shall furnish the Engineer documentary proof of payment to the property owner for all materials as stated in Subsection 106.10.A.2 above. Under these circumstances, no separate payment will be made for Clearing and Grubbing, or Reclamation of Pits. Material sources shall not be excavated at locations where the resulting scars will present an unsightly appearance from any State or Federal highway. No payment will be made for material obtained in violation of this provision.

The Contractor shall provide a survey and sketch for all contractor-furnished material pits and haul road routes in accordance with the following:

The pit boundaries and haul road routes shall be selected and staked at 200 ft (60 m) intervals or as required by the Engineer. Minimum work shall include measurement of pit boundaries and haul road routes using a chain or stadia and

measurement of angles or bearings using a transit or a Brunton Compass. Pit boundaries and haul road routes shall be adequately marked and referenced to a centerline station number on the project.

D. Haul Roads

Unless specifically provided, no separate payment will be made to the Contractor for construction or maintenance of any roads constructed for hauling materials. The cost of constructing, maintaining, and revegetating, if necessary, these haul roads shall be included in the prices bid for the Pay Items pertaining to the part of The Work in which the materials are used. Other designated Haul Roads will be paid for in accordance with Section 233.

106.11 Field Laboratory

The Contractor may be required to provide a field laboratory on or near the Project consisting of a suitable building in which to house and use the equipment necessary to perform the required tests. The building, if required, will meet the requirements of and be paid for in accordance with Section 152.

At all permanent plants producing asphaltic concrete, Portland cement concrete or cement stabilized base course materials, a fully equipped plant laboratory shall be furnished at no expense to the Department.

106.12 Inspection for Non-Domestic Materials

A. Materials Manufactured Outside the United States

Materials which are manufactured outside the United States shall be delivered to a distribution point in the United States, where the materials shall be retained for a sufficient period of time to permit inspection, sampling, and testing. The Contractor, at no cost to the Department, shall furnish facilities and arrange for all testing as required by the Engineer to ensure that the materials comply with the Specifications. All such tests shall be made in the presence of the Engineer or his representative, and if the tests are performed outside of the boundaries of the State of Georgia and its contiguous area, the Contractor shall reimburse the Department for the expenses actually incurred by the Engineer or his representative in attending the tests.

B. Certified Mill Test Reports

Certified mill test reports shall be furnished for all materials obtained from foreign manufacturers. Such reports shall be printed in English and shall be clearly identifiable to the lot of material tested.

C. Materials from Foreign Manufacturers

Materials shall be furnished only from those foreign manufacturers who have previously established, to the satisfaction of the Engineer, the sufficiency of their in-plant quality control which will give satisfactory assurance of the manufacturer's ability to furnish material uniformly and consistently in compliance with the Specifications. Such sufficiency shall be established by detailed written evidence to the Engineer's satisfaction, or, if deemed necessary, through in-plant inspection by the Engineer or his representative; the cost of such inspection to be reimbursed by the Contractor.

D. Structural Steel Fabricated Outside the State of Georgia

In the event the Contractor elects to have items of structural steel fabricated outside the boundaries of the State of Georgia and its contiguous area, the Contractor shall reimburse the Department for the actual cost of the shop inspection of such fabrication in excess of the average inspection cost for shop inspection of fabrication within the State of Georgia and its contiguous area. Such actual costs of shop inspection may include the actual expenses incurred by the Engineer or his representative in making an in-plant inspection, arranging for an approved inspection agency to make the shop inspection, and the cost of the shop inspection by the approved inspection agency.

E. Department Reimbursement

In the event the Contractor fails to reimburse the Department promptly for any of the costs established by this provision, the Contractor agrees that the amount of such costs may be deducted from amounts of money owing to the Contractor on Monthly Estimates or Final Estimate.

F. Definitions

The following definitions shall apply to Subsection 106.12.

United States: The geographical area of the United States of America excluding its territories and possessions.

State of Georgia and Contiguous Area: The geographical area within the State of Georgia and those states which share a common border with the State of Georgia.

Average Inspection Cost: The average of the actual expenses incurred in making an inspection within the area designated as determined by the Engineer.

Foreign Manufacturer: A manufacturer of materials where the materials are manufactured outside the geographical area of the United States.

106.13 Out of State Materials Payment

Materials payments to Contractors who elect to have materials fabricated and stored outside the boundaries of the State of Georgia shall be made under the following guidelines.

The Contractor shall submit a written request to the Engineer for an inspection of out-of-state materials. This request shall state that the Contractor agrees to reimburse the Department for the actual cost of travel, subsistence, and extra expense incurred by the Department in the execution of this inspection and any subsequent inspection that may be necessary. This request shall be signed by a person legally responsible to bind the company and shall be notarized.

In the event the Contractor fails to reimburse the Department promptly for any of the costs established by this provision, the Contractor agrees that the amount of such costs may be deducted from amounts of money owing to the Contractor on Monthly Estimates or Final Estimate.

The above requirements are not applicable to the fabrication and materials payment for structural steel, prestress beams, precast bridge units, and piling for bridge construction within the states which share a common border with the State of Georgia.

Section 107—Legal Regulations and Responsibility to the Public

107.01 Laws to Be Observed

The Contractor shall keep fully informed of all Federal and State laws, all local laws, ordinances, codes, and regulations and all orders and decrees of bodies or tribunals having any jurisdiction or authority, which in any manner affect those engaged or employed on The Work, or which in any way affect the conduct of The Work. The Contractor shall at all times observe and comply with all such laws, ordinances, codes, regulations, orders, decrees, and permits; and shall protect and indemnify the Department and its representatives against any claim or liability arising from or based on the violation of any such law, ordinance, code, regulation, order, decrees, and permits, whether by himself, his employees, subcontractors, or agents.

107.02 Permits and Licenses

The Contractor shall procure all permits and licenses, pay all charges, taxes, and fees, and give all notices necessary and incidental to the due and lawful prosecution of The Work.

107.03 Patented Devices

If the Contractor employs any design, device, material, or process covered by letters of patent or copyright, he shall provide for such use by suitable legal agreement with the patentee or owner. The Contractor and the Surety shall indemnify and save harmless the Department from any and all claims for infringement by reason of the use of any such patented design, device, material, or process, or any trademark or copyright, and shall indemnify the Department for any costs, expenses, and damages which it may be obliged to pay by reason of any infringement, at any time during the prosecution or after the completion of The Work.

107.04 Restoration of Surfaces Opened By Permit

The right to construct or reconstruct any utility service in the highway or street and to grant permits for the same at any time, is expressly reserved by the Department for the proper authorities of the municipality or county in which The Work is done and the Contractor shall not be entitled to any damages either for the digging up of the street or highway, or for any delay occasioned thereby.

Any individual, firm, or corporation wishing to make an opening in the street or highway must secure a permit from the Department. The Contractor shall allow parties bearing such permits, and only those parties, to make openings in the street or highway. When ordered by the Engineer, the Contractor shall make in an acceptable manner all necessary repairs due to such openings and such necessary work will be paid for as Extra Work, or as provided in the Specifications, and will be subject to the same conditions as original work performed.

107.05 Federal-Aid Provisions

When the United States Government pays all or any part of the cost of a project, the Federal laws and the rules and regulations made pursuant to such laws must be observed by the Contractor, and The Work shall be subject to the inspection of the appropriate Federal agency. Such inspection shall in no sense make the Federal Government a party to this Contract and will in no way interfere with the rights of either party hereunder.

107.06 Sanitary Provisions

The Contractor shall provide and maintain in a neat, sanitary condition such accommodations for the use of his employees as may be necessary to comply with the requirements of the State Department of Health and other authorities having jurisdiction, and shall permit no public nuisance.

107.07 Public Convenience and Safety

The Contractor shall at all times so conduct The Work as to assure the least possible obstruction of traffic. The safety and convenience of the general public and the residents along the highway and the protection of persons and property shall be provided for by the Contractor as specified under Subsection 104.05, Subsection 107.09, Section 150, the Project Plans, and Special Provisions.

Traffic whose origin and destination is within the limits of the Project shall be provided ingress and egress at all times unless otherwise specified in the Plans or Special Provisions. The ingress and egress includes entrance and exit via driveways at the various properties, and access to the intersecting roads and streets. The Contractor shall maintain sufficient personnel and equipment on the project at all times, particularly during inclement weather, to ensure that ingress and egress are provided when and where needed.

Two-way traffic shall be maintained at all times unless otherwise specified or approved. The Contractor shall not stop traffic without permission granted by the Engineer.

All equipment used on The Work shall come equipped with factory-installed mufflers, or manufacturer's recommended equivalent, in good condition. These mufflers shall be maintained in good condition throughout the construction period.

107.08 Railroad-Highway Provisions

All work to be performed by the Contractor on a railroad company's right-of-way or property shall be done in a manner satisfactory to the chief engineer of the railroad company, or his authorized representative, and shall be performed at such times and in such manner as not to unnecessarily interfere with the movement of trains or traffic upon the track of the railroad company. The Contractor shall use all reasonable care and precaution in order to avoid accidents, damage, or unnecessary delay or interference with the railroad company's trains or other property, or property of tenants of railroad company.

The Contractor shall notify the railroad company and obtain its approval before commencing work on the railroad company's right-of-way or property.

The Contractor shall determine what measures are required by the railroad company to protect its operations and right-of-way or property during construction. Such protection may include the use of a flagger or flaggers provided by the railroad company. The Contractor shall be responsible for ensuring that the required protection is provided and shall pay the railroad

company directly for any and all such services which may be required to accomplish the construction unless otherwise specified.

Any temporary grade crossings or other means needed during construction by the Contractor for transporting materials of any nature and/or equipment across the railroad tracks will be the responsibility of the Contractor to handle directly with the railroad company and bear all costs incidental to such crossings including flagging services provided by the railroad company.

A "Special Provisions for the Protection of Railroad Interests" may be included in the proposal to stipulate insurance and other requirements of the railroad company.

107.09 Barricades and Danger, Warning, and Detour Signs

The Contractor shall furnish, install, and maintain all necessary and required barricades, signs, and other traffic control devices in accordance with these Specifications, Project Plans, Special Provisions, and the MUTCD, and take all necessary precautions for the protection of the work and safety of the public.

Unless otherwise specified, all traffic control devices furnished by the Contractor shall remain the property of the Contractor.

107.10 Forest Protection

In carrying out work within or adjacent to State or National Forests, or any other forests, parks, or other public or private lands, the Contractor shall obtain necessary permits and comply with all of the regulations of the appropriate authorities having jurisdiction over such forest, park, or lands. The Contractor shall keep the areas in an orderly condition, dispose of all refuse, obtain permits for the construction and maintenance of all construction camps, stores, warehouses, residences, latrines, cesspools, septic tanks, and other structures in accordance with the requirements of the appropriate authority.

The Contractor shall take all reasonable precautions to prevent and suppress forest fires and shall require his employees and subcontractors, both independently and at the request of forest officials, to do all reasonably within their power to prevent and suppress and to assist in preventing and suppressing forest fires; to notify a forest official at the earliest possible moment of the location and extent of any fire seen by them; and to extinguish or aid in extinguishing nearby fires.

107.11 Construction Over or Adjacent to Navigable Waters

A. Navigation to Be Protected

Since navigable waterways are under the jurisdiction of the United States Coast Guard and/or the United States Army Corps of Engineers, all work done in, over, on or adjacent to such waters shall comply with their requirements. Free navigation shall not be impeded, and navigable depths shall be maintained.

The Contractor shall comply with permits issued by the United States Coast Guard and/or the United States Army Corps of Engineers, and the Contractor shall obtain and comply with other permits in accordance with the requirements of Subsection 107.02

Special Provisions for environmental protection may be included in the proposal to stipulate environmental commitments and other requirements.

B. Obstructions to be Removed

When the construction has progressed enough to permit removal, all falsework, piling and other obstructions shall be removed to the satisfaction of the Federal agency having jurisdiction. In all cases such clearing must be done thoroughly before The Work will be accepted by the Department.

107.12 Use of Explosives

When the use of explosives is necessary for the prosecution of The Work, the Contractor shall exercise the utmost care not to endanger life or property, and shall obey all State, Federal and other Governmental regulations applying to transportation, storage, use, and control of such explosives. The Contractor shall be completely responsible for any and all damage resulting from the transportation, storage, use, and control of explosives in the prosecution of The Work by the Contractor, the

Contractor's agents, or employees; and shall hold the Department harmless from all claims of damages resulting in any manner therefrom.

The Contractor shall notify each public utility owner having structures or other installations, above or below ground, near the site of The Work of his intention to use explosives. Such notice shall be given sufficiently in advance to enable the utility owners to take such steps as they may deem necessary to protect their property from injury. Such notice shall not relieve the Contractor of responsibility for all damages resulting from his blasting operations.

All explosives shall be stored securely in compliance with all laws and ordinances, and all such storage places shall be clearly marked DANGEROUS EXPLOSIVES. Explosives and detonators shall be stored in separate storage facilities in separate areas. Where no laws or ordinances apply, locked storage shall be provided satisfactory to the Engineer, never closer than 1,000 ft (300 m) from any travel-road, building, or camping area.

In all cases where the transport, storage, or use of explosives is undertaken, such activities shall be controlled and directed by fully qualified representatives of the Contractor.

Whenever electric detonators are used, all radio transmitters shall be turned off within a radius of 500 ft (150 m). No blasting supplies shall be transported in vehicles with two-way radio unless the transmitter is turned off, or extra shielding precautions are taken. Appropriate signs shall be placed so as to give ample warning to anyone driving a vehicle equipped with two-way radio. Electrical detonators will not be used within 500 ft (150 m) of a railroad.

Submit a blasting plan to the Engineer a minimum of five working days prior to use of explosives that provides details of the proposed blasting plan, including, but not limited to, the type and amount of explosives, the shot sequence, the description of and distance to the closest inhabitable structure, and other information as requested by the Engineer. Do not begin blasting until the blasting plan has been reviewed and approved in writing by the Engineer. Such approval does not relieve the contractor of the responsibility for the adequate and safe performance of the blasting.

107.13 Protection and Restoration of Property and Landscape

A. General Provisions

The Contractor shall be responsible for the preservation of all public and private property, crops, fish ponds, trees, monuments, highway signs and markers, fences, grassed and sodded areas, etc. along and adjacent to the highway, and shall use every precaution necessary to prevent damage or injury thereto, unless the removal, alteration, or destruction of such property is provided for under the Contract. The Contractor shall use suitable precaution to prevent damage to all underground structures, whether shown on the Plans or not, and shall protect carefully from disturbance or damage, all land monuments and property marks until the Engineer has witnessed or otherwise referenced their location and shall not move them until directed. The Contractor shall not willfully or maliciously injure or destroy trees or shrubs, and he shall not remove or cut them without proper authority.

The Contractor shall be responsible for all sheet piling, shoring, underpinning, etc., as may be required for the protection of abutting property, nearby buildings, streets, and the like.

The Contractor shall be responsible for all damage or injury to property of any character, during the prosecution of The Work, resulting from any act, omission, neglect, or misconduct in his manner or method of executing The Work, or at any time due to defective work or materials, and said responsibility will not be released until the Project shall have been completed and accepted.

When the Contractor's excavating operations encounter remains of prehistoric people's dwelling sites or artifacts of historical or archeological significance, the operations shall be temporarily discontinued. The Engineer will contact archeological authorities and the Office of Environment and Location to determine the disposition thereof. When directed by the Engineer, the Contractor shall excavate the site in such a manner as to preserve the artifacts encountered and shall remove them for delivery to the custody of the proper authorities. Such excavation will be considered and paid for as Extra Work.

When the Contractor's normal operations are delayed by such stoppage or extra work, an appropriate time extension will be granted.

The Contractor shall plan, coordinate, and prosecute the work so that disruption to personal property and business is held to a practical minimum.

No resident or business shall be denied vehicular access to their property for any length of time other than as determined by the Engineer is absolutely necessary. Where two or more existing driveways are present for a business, only one existing driveway shall be closed at any time. All construction areas abutting lawns and yards of residential or commercial property shall be restored promptly. Backfilling of each drainage structure or section of curb and gutter, sidewalk, or driveway shall be accomplished as soon as adequate strength is obtained. Finishing, dressing, and grassing shall be accomplished immediately thereafter as a continuous operation within each area being constructed with emphasis placed on completing each individual yard or business frontage. Care shall be taken to provide positive drainage to avoid ponding or concentration of runoff.

Handwork, including raking and smoothing, shall be required to ensure that roots, sticks, rocks, and other debris are removed in order to provide a neat and pleasing appearance. Grassing, when in season, shall immediately follow in order to establish permanent cover at the earliest date. If grassing is not in season, proper erosion control shall be installed and maintained.

The work described above shall be in addition to that required by Subsection 104.07, “Final Cleaning Up” and Subsection 105.16, “Final Inspection and Acceptance”.

B. Erosion and Siltation Control

The Contractor shall take all necessary measures throughout the life of the Project to control erosion and silting of rivers, streams, and impoundments (lakes, reservoirs, etc.). Construction of drainage facilities as well as performance of other Contract work which will contribute to the control of erosion and siltation shall be carried out in conjunction with clearing and grubbing, and earthwork operations as stipulated in Section 161.

C. Pollution

The Contractor shall exercise every reasonable precaution throughout the life of the Contract to prevent pollution of rivers, streams or impoundments. Pollutants such as chemicals, fuels, lubricants, bitumens, raw sewage and other harmful waste shall not be discharged into or alongside rivers, streams, and impoundments, or into natural or manmade channels leading thereto. The Contractor shall also comply with the applicable regulations of other State and Federal departments and to all governmental statues relating to the prevention and abatement of pollution.

D. Insect Control Regulations

The Plant Pest Control Division of the U.S. Department of Agriculture and the Georgia State Department of Agriculture restrict the movement of certain items from areas infested with Japanese Beetles or Imported Fire Ants so as to prevent the spread of these pests to non-infested areas. Where insect infested areas are shown on the Plans, Contractors will control their operations in such a manner as to comply fully with the requirements of Section 155.

E. Reclamation of Material Pits and Waste Disposal Areas

Whenever or wherever the Contractor obtains material from a source or wastes material on an area other than within the Right-of-Way, regardless of the fashion, manner or circumstances for which the source or area is obtained, it shall be reclaimed in accordance with the requirements of Section 160.

F. Mailboxes

The property owner shall have the responsibility for removing and relocating the mailbox to an area outside construction limits.

The Engineer will mark a point for the relocation of the box. The stake should be set so that the location of the box will be convenient to both the mail carrier and the patron, yet not interfering with the proposed work. It may be necessary for the Engineer to confer with the Post Office serving the area.

The Contractor shall notify each affected owner, in writing, that their mailbox is in conflict with the proposed construction, that they have ten days to relocate the box and that, after the expiration of the 10 days notice, if the owner has not relocated the box, it shall be removed by the Contractor and laid upon the owner’s property, clear of the Right-of-Way.

Any cost to the Contractor for removing the mailboxes as stated above shall be included in the price bid for other items.

G. Failure to Comply

Failure of the Contractor to comply with any of the above provisions or to install erosion prevention items included in the Contract at the time specified, will be evidence of omission and neglect, and the Contractor will be liable for damages as outlined in Subsection 107.13.H below. Furthermore, the Engineer shall withhold payment on all Contract Items until such time as the Contractor complies in full with all of the aforesaid provisions.

H. Payment for Damages

When or where any direct or indirect damage or injury is done to public or private property by or on account of any act, omission, neglect, or misconduct in the execution of the Work, or in consequence of the nonexecution thereof by the Contractor, the Contractor shall restore, at his own expense, such property to a condition similar or equal to that existing before such damage or injury was done, by repairing, rebuilding or otherwise restoring as may be directed, or shall make good such damage or injury in an acceptable manner.

I. Compensation

All costs pertaining to any requirement contained herein shall be included in the overall Bid submitted unless such requirement is designated as a separate Pay Item in the Proposal.

107.14 Load Restrictions

It is hereby agreed between the Department and the Contractor that in the performance of The Work under the Contract, the following load restrictions and stipulations shall be in full force and effect during the life of the Contract:

A. Parties Affected

The load restrictions and stipulations contained herein shall be applicable to the equipment of the Contractor; each agent or subcontractor employed by the Contractor; and each person or persons, firm, partnership, corporation or any combination thereof, hauling materials, supplies or equipment to or on the Project, by or for the Contractor.

B. Within Project Limits

No hauling equipment which is loaded beyond those limits provided by State Law shall be permitted on any portion of the new or existing pavement structure except that such loads will be permitted on nonstabilized bases and subbases prior to placing roadway paving subject to the provisions of Subsection 107.17.

Axle loads and gross weight limits will be evaluated in accordance with current Georgia Law.

All damage caused by any equipment to any permanent installation or portion of The Work shall be promptly repaired by the Contractor at his expense. When it becomes necessary to cross existing pavement with excessive loads, the Contractor shall provide and remove, at his own expense, proper cushioning by means of earth blanket or otherwise as directed.

C. Outside Project Limits

All equipment users included in Subsection 107.14.A, above, operating equipment on roads outside the Project limits shall be governed by the following regulations:

1. No vehicle shall carry any load in excess of that specified by Georgia Law.
2. On County System roads the maximum total gross weight shall not exceed 56,000 lbs (25,400 kg) unless a vehicle is making a pickup or delivery on such roads.
3. For a specific individual trip the above weight limitations may be exceeded provided a special permit is obtained from the Department for each such movement. A special permit will not relieve the Contractor of liability for damage that may result from such a movement.
4. Authorized personnel of the Office of Permits and Enforcement of the Department shall be permitted to weigh each truck hauling material to the Project whenever the Department so desires. The owner of each truck shall instruct his operators to cooperate with and assist the truck weighers in every way possible.

5. A Certified Public Weigher operating under the provisions of Standard Operating Procedure 15 shall not dispatch any vehicle loaded with material to be incorporated into the Project when the gross vehicle weight exceeds the limit established by law.
6. Ready Mix Concrete trucks shall comply with load restrictions as specified in Laboratory Standard Operating Procedure 10, "Quality Assurance for Ready-Mixed Concrete Plants in Georgia."

D. Responsibilities

It will be the responsibility of the Contractor to advise his personnel, and all equipment users included in Subsection 107.14.A, as to the load restrictions and stipulations contained herein.

E. Excess Loads and Violations

Any load that exceeds the legal limits specified by law may be accepted at the Engineer's discretion for use in The Work; however, weight exceeding the legal limits will be deducted from the total weight and the Contractor will not receive payment for the deducted portion of materials. (For items not measured for payment by weight, the excess weight will be correlated to the appropriate pay quantity and this amount will be deducted from the payment.) The loads of haulers who refuse to have their vehicles weighed will be rejected.

If multiple violations assignable to a given Certified Public Weigher are occurring, that Certified Public Weigher may be suspended from weighing materials dispatched to Department of Transportation projects.

107.15 Responsibility for Damage Claims

The Contractor shall indemnify and save harmless the Department, its officers and employees, from all suits, actions, orclaims of any character brought because of any injuries or damage received or sustained by any person, persons, or property on account of the operations of the said Contractor; or on account of or in consequence of any neglect in safe-guarding The Work; or through use of unacceptable materials in constructing The Work; or because of any act of omission, neglect or misconduct of said Contractor; or because of any claims or amounts recovered from any infringements of patent, trademark, or copyright; or from any claims or amounts arising or recovered under the Workmen's Compensation Act, or any other law, ordinance, order, or decree; and so much of the money due the said Contractor under and by virtue of his Contract as may be considered necessary by the Department for such purpose may be withheld for the use of the State; or, in case no money is due, his surety may be held until such suit or suits, action or actions, claim or claims for injuries or damages as aforesaid shall have been settled and suitable evidence to that effect furnished to the Department; except that money due the Contractor will not be withheld when the Contractor produces satisfactory evidence that he is adequately protected by public liability and property damage insurance.

107.16 Opening Sections of Project to Traffic

Whenever any bridge or section of roadway is in acceptable condition for travel, the Engineer may direct that it be opened to traffic, whether or not the opening was originally provided for, and such opening shall not be held to be in any way an acceptance of the bridge or roadway, or any part thereof, or as a waiver of any of the provisions of the Contract. Necessary repairs or renewals made on any section of the roadway or bridge thus opened to traffic under instructions from the Engineer, due to defective material or work, or to any cause other than ordinary wear and tear, pending completion and acceptance of the roadway, bridge, or other work, shall be done by the Contractor, without additional compensation. Also, the Contractor shall not receive additional compensation for completing the Work except as specified in Subsection 104.03.

If the Contractor is dilatory in completing shoulders, drainage structures, or other features of work, the Engineer may so notify him in writing and establish therein a reasonable period of time in which the Work should be completed. If the Contractor is dilatory, or fails to make a reasonable effort toward completion in this period of time, the Engineer may then order all or a portion of the Project opened to traffic. On such sections which are so ordered to be opened, the Contractor shall conduct the remainder of his construction operations so as to cause the least obstruction to traffic and shall not receive any added compensation due to the added cost of the Work by reason of opening such section to traffic.

On any section opened to traffic under any of the above conditions, whether stated in the Special Provisions or opened by necessity of Contractor's operations, or unforeseen necessity, any damage to the highway not attributable to traffic which might occur on such section (except slides) shall be repaired by the Contractor at his expense. The removal of slides shall be done by the Contractor on a basis agreed to prior to the removal of such slides.

107.17 Contractor's Responsibility for the Work

From the first day the Contractor begins work, or from the date Contract Time commences, whichever occurs first, until written final acceptance of the project by the Engineer, the Contractor shall have the charge and care thereof and shall take every precaution against injury or damage to any part thereof by the action of the elements or from any other cause, whether arising from the execution or from the non-execution of The Work. The Contractor shall rebuild, repair, restore, and make good all injuries or damages to any portion of The Work occasioned by any of the above causes before final acceptance and shall bear the expense thereof except that the Department may, in its discretion, reimburse the Contractor for the repair of damage to The Work due to unforeseeable causes beyond the control of and without the fault or negligence of the Contractor, including but not restricted to acts of God, of the public enemy or of governmental authorities. The Contractor's responsibility for damages and injuries is defined in Subsection 104.05.A.

In case of suspension of work from any cause whatsoever, the Contractor shall be responsible for the Project and shall take such precautions as may be necessary to prevent damage to the Project, provide for normal drainage and shall erect any necessary temporary structures, signs, or other facilities at his expense.

107.18 Acquisition of Right-of-Way

Rights of Way for the project will be obtained by the Department, in coordination with local governments and others. However, the Contractor's access to the portions of the right-of-way may be restricted. Where such restrictions are known in advance to the Department they will be listed in the bid proposal. Delays to the progress of the Work may be encountered because of restricted access to portions of the right-of-way. When such delays occur, whether caused by restrictions listed in the bid proposal or restrictions that develop after the Contract is signed, the parties agree in executing the Contract that such delays do not constitute breach of the Contract. Delays in availability of right-of-way beyond those listed in the bid proposal, or that develop after the Contract has been signed, that impact the controlling Item or Items of the Work will not be charged against the Contract Time. Additional compensation for such delays shall not be paid, except as provided in Subsection 105.13, "Claims for Adjustments and Disputes," or Subsection 109.09, "Termination Clause." In the event the Department is unable to acquire right-of-way needed for the project, resulting in delay to or termination of the project, such situation will also be controlled by this Section, and will not constitute a breach of the Contract by the Department.

107.19 Personal Liability of Public Officials

In carrying out any of the provisions of the Contract or in exercising any power or authority granted to the Board, Commissioner, Chief Engineer, their agents and employees, by the Contract, there shall be no liability, either personally or as officials or representatives of the Department, it being understood that in all such matters they act solely as agents and representatives of the Department.

107.20 No Waiver of Legal Rights

Upon completion of The Work, the Department will expeditiously make final inspection and notify the Contractor of acceptance. Such final acceptance, however, shall not preclude or estop the Department from correcting any measurement, estimate, or certificate made before or after completion of The Work, nor shall the Department be precluded or estopped from recovering from the Contractor or his Surety, or both, such over-payment as it may sustain, or by failure on the part of the Contractor to fulfill his obligations under the Contract. A waiver on the part of the Department of any breach of any part of the Contract shall not be held to be a waiver of any other or subsequent breach.

The Contractor, without prejudice to the terms of the Contract, shall be liable to the Department for latent defects, fraud, or such gross mistakes as may amount to fraud, or as regards the Department's rights under any warranty or guaranty.

107.21 Contractor's Responsibility for Utility Property and Services

A. Overhead or Underground Utility Facilities

At points where the Contractor's operations are adjacent to or conflict with overhead or underground utility facilities, or are adjacent to other property, damage to which might result in considerable expense, loss, or inconvenience, work shall not be commenced until all arrangements necessary for the protection thereof have been made.

B. Utility Facility Owners

The names of known utility owners and the location of known utility facilities will be shown on the Plans or in the Special Provisions, and the Contractor shall give 24-hour notice to such utility owners before commencing work adjacent to said utility facilities which may result in damage thereto. Contractor shall further notify utility owners of any changes in his work schedules affecting required action by the utility owners to protect or adjust their facilities. Notice to the utility companies by the Department of the Award of Contract, under Subsection 105.06, shall not be deemed to satisfy the notice required by this paragraph.

C. Cooperation with Facility Owners

The Contractor shall cooperate with the owners of any underground or overhead utility facilities in their removal and rearrangement operations in order that these operations may progress in a reasonable manner, that duplication of rearrangement work may be reduced to a minimum, and that services rendered by those parties will not be unnecessarily interrupted.

D. Interruption of Services

In the event of interruption to water or other utility services as a result of accidental breakage or as a result of being exposed or unsupported, the Contractor shall promptly notify the proper authority and shall cooperate with the said authority in the restoration of service. If utility service is interrupted, repair work shall be continuous until the service is restored. No work shall be undertaken around fire hydrants until provisions for continued service have been approved by the local fire authority.

E. Facilities Supported on Bridges

If the utility facilities are to be supported on bridges, the following provisions shall apply:

1. The Plans will show the location of the facility and the auxiliary items necessary to support the facility.
2. The Contractor who constructs the bridge shall install anchor bolts, thimbles, inserts, or other auxiliary items that are attached to the bridge as a part of the support for the utility facility. The Utility owner, at his or her expense, shall furnish these auxiliary items, unless the Contract indicates that these items are to be furnished by the Contractor as a part of the bridge.
3. The Agency constructing the utility facility shall install hanger rods, pipe rolls, and other attachments necessary for the support of the utility facility as indicated on the Plans. The Utility owner, at his expense, shall furnish these attachments unless otherwise specified. This work shall also include:
    a. Caulking the openings around the utility where it passes through endwalls to prevent the passage of undesirable materials.
    b. Painting the exposed portions of utility supports unless such supports are corrosion resistant. Painting shall be done in accordance with the applicable portions of Section 535, unless otherwise specified.
4. The sequence of bridge construction work may be set forth in the Plans and/or the Special Provisions and will show at what stage of the Work a utility owner will be allowed to make the utility installation. Further, all or any portion of The Work under Subsection 107.21.E.3 may be included in the bridge Contract by the Plans and/or the Special Provisions.
5. Any damage to the bridge structure caused by the utility installation shall be repaired to the satisfaction of the Engineer at the expense of the agency installing the utility facility.

F. Clearances

The Plans provide for at least minimum clearance of utilities as required by the National Electrical Safety Code, U.S. Department of Commerce, National Bureau of Standards. Any additional clearance the Contractor may desire or require in performing The Work shall be arranged by the Contractor with the utility owner. The Department will pay no extra compensation for such additional clearances.

G. Delays

Delays and interruptions to the controlling Item or Items of The Work caused by the adjustment or repair of water, gas, or other utility appurtenances and property will be considered for an extention of Contract Time as provided in Subsection 108.07 unless such delays are due to the negligence of the Contractor.

H. Compensation

There will be no direct compensation for complying with the above. Any additional cost to the Contractor for the above services, interruptions, or special procedures, shall be included in the over-all Bid submitted.

107.22 Hazardous and/or Toxic Waste

When the Contractor's operations encounter or expose any abnormal condition which may indicate the presence of a hazardous and/or toxic waste, such operations shall be discontinued in the vicinity of the abnormal condition and the Engineer shall be notified immediately. The presence of barrels, discolored earth, metal, wood, or visible fumes, abnormal odors, excessively hot earth, smoke, or anything else which appears abnormal may be indicators of hazardous and/or toxic wastes and shall be treated with extraordinary caution as they are evidence of abnormal conditions.

The Contractor's operations shall not resume until so directed by the Engineer.

Disposition of the hazardous and/or toxic waste will be made in accordance with the requirements and regulations of the Department of Human Resources and the Department of Natural Resources. Where the Contractor performs work necessary to dispose of hazardous and/or toxic waste, payment will be made at the unit prices for pay items included in the contract which are applicable to such work or, where the contract does not include such pay items, payment will be as provided in Subsection 109.05, "Extra Work."

107.23 Environmental Considerations

A. Construction

Erosion control measures shall be installed, to the greatest practical extent, prior to clearing and grubbing. Particular care shall be exercised along stream buffers, wetlands, open waters and other sensitive areas to ensure that these areas are not adversely affected.

Construction equipment shall not cross streams, rivers, or other waterways except at temporary stream crossing structures shown on the plans or as allowed by permit.

Construction activities within wetland areas are prohibited except for those within the construction limits as shown on the Plans and as specified in Subsection 107.23.E.

All sediment control devices (except sediment basins) installed on a project shall, as a minimum, be cleaned of sediment when one half the capacity, by height, depth or volume, has been reached. Sediment basins shall be cleaned of sediment when one-third the capacity by volume has been reached.

B. Bridge Construction Over Waterways

Construction waste or debris, from bridge construction or demolition, shall be prevented from being allowed to fall or be placed into wetlands, streams, rivers or lakes.

Excavation, dewatering, and cleaning of cofferdams shall be performed in such a manner as to prevent siltation. Pumping from cofferdams to a settling basin or a containment unit will be required if deemed necessary by the Engineer.

Operations required within rivers or streams, i.e. jetting or spudding, shall be performed within silt containment areas, cofferdams, silt fence, sediment barriers or other devices to minimize migration of silt off the project.

C. Borrow and Excess Material Pits

Specific written environmental clearance from the Engineer will be required for any sites not included in the Plans as excess material or borrow areas. No work other than testing shall be started at any potential excess material or borrow site not shown on the plans prior to receiving said environmental clearance from the Engineer.

The Engineer will require a written notice from the Contractor requesting environmental clearance studies and written permission from the property owner at least six weeks prior to intended use of the site. The Department will not begin studies on such sites before a Notice to Proceed is issued.

The Engineer will inform the Contractor in writing as to the granting or denial of environmental clearance. If denied, the Contractor may, at no expense to the Department, seek to obtain permits or pursue other remedies that might otherwise render the site(s) acceptable.

Sites included in the Plans have environmental clearance and shall be used only for the purpose(s) specified in the Plans or other contract documents. Should the Contractor wish to expand or utilize said sites for any purpose other than that provided for in the Plans or other contract documents, specific written environmental clearance as noted above shall be obtained.

D. Control of Pollutants

Pollutants or potentially hazardous materials, such as fuels, lubricants, lead paint, chemicals or batteries, shall be transported, stored, and used in a manner to prevent leakage or spillage into the environment. The Contractor shall also be responsible for proper and legal disposal of all such materials.

Equipment, especially concrete or asphalt trucks, shall not be washed or cleaned-out on the Project except in areas where unused product contaminants can be prevented from entering waterways.

E. Temporary Work in Wetlands Outside of the Construction Limits within the Right-of-Way and Easement Areas

Temporary work in wetlands (that are not delineated with orange barrier fence) will be subject to the following requirements:

1. Temporary work in wetlands shall be accomplished by using temporary structures, timber, concrete, soil with geotextile fabric, or other suitable matting. The area shall not be grubbed.

2. Soil matting shall be protected from erosion in accordance with the Specifications.

3. Whenever temporary work is required in Saltwater Marsh Wetlands, all temporary structures and/or matting shall be removed in their entirety prior to Final Acceptance of the Project. Matted and compressed soils shall be backfilled to their original ground elevation with material meeting the requirements of Section 212 – Granular Embankment.
4. Whenever temporary work is required in Freshwater Wetlands, all temporary structures and/or matting (exclusive of soil matting to be retained in the final roadway section) shall be removed in their entirety prior to Final Acceptance of the Project.

   Once the temporary materials have been removed, the area shall be covered by Excelsior or Straw blankets according to Section 713 of the Specifications. The grassing and ground preparation referenced in Subsection 713.3.03, “Preparation”, will not be applicable to this Work.
5. The Engineer shall be notified so that a field inspection may be conducted to certify that the temporary materials were properly removed and that the area was properly restored. The Contractor shall be responsible for any corrective action required to complete this Work.

6. There will be no separate measurement or payment for this Work. The cost associated with this work shall be included in the overall Bid submitted.

F. Environmentally Sensitive Areas

Some archaeological sites, historic sites, wetlands, streams, stream and pond buffers, open waters and protected animal and plant species habitat within the existing/required Right-of-Way and easement areas may be designated as ENVIRONMENTALLY SENSITIVE AREAs (ESAs). These areas are shown on the applicable Plan sheets and labeled “ESA” (e.g. ESA – Historical Boundary, ESA – Wetland Boundary). The Department may require that some ESAs or portions thereof be delineated with orange barrier fence. The Contractor shall install, maintain, and replace as necessary orange barrier fence at ESAs as delineated in the Plan sheets.

The Contractor shall not enter, disturb, or perform any construction related activities, other than those shown on the approved plan sheets within areas designated as ESAs including ESAs or portions thereof not delineated with orange barrier fence. This includes but is not limited to the following construction activities: clearing and grubbing; borrowing; wasting; grading; filling; staging/stockpiling; vehicular use and parking; sediment basin placement; trailer placement; and equipment cleaning and storage. Also, all archaeological sites, historic sites, wetlands, streams, stream and pond buffers, open waters, and protected animal and plant species habitat that extend beyond the limits of existing/required Right-of-Way and easement areas shall be considered ESAs and the Contractor shall not perform any construction related activities (such as those listed above) within these areas or make agreements with property owners to occupy these areas for construction related activities (such as those listed above). The Contractor shall make all construction employees aware of the location(s) of each ESA and the requirement to not enter or otherwise disturb these areas.

If the Contractor is found to have entered an ESA, either within or outside the project area, for any purpose not specifically shown on the approved plan sheets, the Department may, at its discretion, issue a stop work order for all activities on the project except erosion control and traffic control until such time as all equipment and other items are removed and the ESA is restored to its original condition.

However, should damage to an ESA occur as a result of the Contractor's action in violation of this section, and notwithstanding any subsequent correction by the Contractor, the Contractor shall be liable for any cost arising from such action, including but not limited to, the cost of repair, remediation of any fines, or mitigation fees assessed against the Department by another government entity.

107.24 Closing of Roadways Without On-Site Detours

When existing roadways are to be closed to through traffic and on-site detours are not provided, the Contractor shall submit a written notice to the Engineer for approval 14 days prior to the closure of the existing roadways.

After receiving approval from the Engineer for the closure, the Contractor shall install signs at each closure site, in accordance with the MUTCD, to inform the traveling public of the proposed closure, including the date of closure. The sign shall be placed 5 days prior to the closure, at the direction of the Engineer.

Prior to the closure, the Area Engineer will inform local government officials and agencies, local news media, and the DOT Public Information Office of the proposed closure of the roadways.

107.25 Disruption to Residential and Commercial Property

The Contractor shall plan, coordinate, and prosecute the work such that disruption to personal property and business is held to a practical minimum.

All construction areas abutting lawns and yards of residential or commercial property shall be restored promptly. Backfilling of each drainage structure or section of curb and gutter, sidewalk, or driveway shall be accomplished as soon as adequate strength is obtained. Finishing, dressing and grassing shall be accomplished immediately thereafter as a continuous operation within each area being constructed with emphasis placed on completing each individual yard or business frontage. Care shall be taken to provide positive drainage to avoid ponding or concentration of runoff.

Handwork, including raking and smoothing, shall be required to ensure that roots, sticks, rocks, and other debris is removed in order to provide a neat and pleasing appearance. Grassing, when in season, shall immediately follow in order to establish permanent cover at the earliest date. If grassing is not in season, proper erosion control shall be installed and maintained.

The work described herein shall be in addition to that required by Subsection 104.07 "Final Cleaning Up" and Subsection 105.16 "Final Inspection and Acceptance."

108.01 Subletting of Contract

The Contractor shall not sublet, sell, transfer, assign, or otherwise dispose of the Contract or Contracts, or any portion thereof, or of his/her right, title, or interest therein, without written consent of the Engineer. For Subcontracts, consent of the Engineer will not be considered until after award of the Contract.

In case such consent is given, the Contractor will be permitted to sublet a portion thereof, but shall perform, with his/her own organization, work amounting to not less than thirty percent (30%) of the total Contract cost, including materials, equipment, and labor.

As further exception, any items designated as Specialty Items may be performed by Subcontract and the cost of any such Specialty Items so performed by Subcontract may be deducted from the total cost before computing the amount of work required to be performed by the Contractor with his/her own organization.

Purchase of materials by the Prime Contractor for use by a Subcontractor will not be allowed when computing the 30% requirement.

No Subcontracts, or transfer of Contract, shall in any case release the Prime Contractor of his/her liability under the Contract and Bonds. No Subcontractor shall commence work in advance of the written approval of the Subcontract by the Department. Except for certain items exempted by the State Transportation Board, each Subcontractor shall be prequalified or registered with the Department. Each Subcontract for a Registered Subcontractor shall not exceed $1,000,000.00 and Subcontracts for Prequalified Contractors shall not exceed their current capacity. Prequalified or Registered Subcontractors shall be qualified or registered with the Department in accordance with Chapter 672-5 of the Rules and Regulations Governing the Prequalification of Prospective Bidders adopted by the State Transportation Board.

In the event any portion of a Subcontract is further sublet, all of the provisions governing subletting, including registration and written approval by the Engineer, shall apply.

This Sub-Section shall not apply to Contracts between the Department and counties, municipalities, or other State agencies.

All subcontract agreements between the Prime Contractor and subcontractor shall be in writing and shall contain all of the Federal-Aid requirements and pertinent provisions of the Prime Contract. The Prime Contractor shall, upon request by the Engineer, furnish copies of any subcontract agreement to the Department within ten (10) days of such request. This provision applies to all subcontracts, including second or multi-tier subcontracts.

According to the provisions stated above, the following items are designated Specialty Items for general transportation system construction and building construction whenever they appear in the Contract:

<u>General Transportation System Contracts</u>

- Grassing items
- Fencing items
- Highway lighting items
- Sign items
- Guardrail items (except bridge handrail)
- Utility items
- Comfort and convenience items in rest areas
- Landscaping items
- Pressure grouting, slab removal and replacement
- Permanent traffic markings
- Signal systems
- Railroad track work above sub-ballast
- Drilled caisson foundations

- Construction layout
- Asphaltic concrete leveling and asphalt concrete patching (when used on surface treatment and slurry seal resurfacing contracts)

Building Contracts

- Structural Steel
- Plumbing
- Heating, ventilation, and air conditioning (HVAC)
- Electrical
- Telephone service
- Masonry
- Glass work
- Drywall
- Ceiling installation
- Roofing
- Carpentry
- Floor covering
- Raised flooring
- Landscaping
- Security system
- Fire protection
- Gutters
- Painting
- Insulation
- Doors
- Elevators
- Construction layout

The Contractor's cost for Construction Layout shall be fully documented prior to deduction from the original Contract amount)

108.02 Notice to Proceed

The delivery to the Contractor of a notice, stating that construction is authorized, constitutes Notice to Proceed. The Contractor shall do no work under the Contract until receipt of the Notice to Proceed, and the Department will not be obligated to pay for work done prior to receipt of the Notice to Proceed.

Within 10 calendar days after the Notice to Proceed has been issued, the Contractor shall begin The Work. Contract Time charges for Available Day and Calendar Day projects will begin on the date the Contractor starts to work, or 10 days after the Notice to Proceed, whichever occurs first. For Completion Date projects Contract Time charges shall begin on the day after the Notice to Proceed.

Where the Contractor's access to part of the right-of-way is restricted, either the Special Provisions in the Contract or the Conditional Notice to Proceed will indicate such restrictions. The Department may, at its option, issue a Conditional Notice to Proceed if, in the opinion of the Engineer, a sufficient portion of the right-of-way is available to the Contractor to allow construction to proceed.

108.03 Prosecution and Progress

The Contractor shall provide sufficient materials, equipment, and labor to guarantee the completion of the Project in accordance with the Plans and Specifications within the time set forth in the Proposal. Unless otherwise required by the Engineer, each operation shall begin as soon after the Contract is awarded as conditions will permit. Each class of work will be expected to continue from the date it is begun until it is completed.

The Contractor shall furnish the Engineer, for approval, a Progress Schedule immediately following the receipt of the Notice to Proceed. Unless otherwise specified, the schedule shall be prepared on forms furnished by the Department or an acceptable critical path schedule will be used as the basis for establishing the controlling items of work and as a check on the progress of The Work. This Schedule will not be required on resurfacing projects.

Approval of the Progress Schedule shall not be construed to imply approval of any particular method or sequence of construction or to relieve the Contractor of providing sufficient materials, equipment, and labor to guarantee the completion of the Project in accordance with the Plans, Specifications, and Special Provisions within the time set forth in the Proposal. Contract Time as shown in the Proposal is the allowable time. The Contractor's proposed Progress Schedule may indicate a completion date in advance of the Contract Specified Completion Date; however, the Department will not be liable in any way for the Contractor's failure to complete the project prior to the Contract Specified Completion Date.

At least 48 hours before commencing The Work, the Contractor shall notify the Engineer of his intention to begin so that proper inspection may be provided. Should the prosecution of The Work be discontinued for any reason, the Contractor shall notify the Engineer at least 24 hours in advance of resuming operations.

If the Contractor's operations are materially affected by changes in the Plans or in the amount of work, or if he has failed to comply with the approved schedule, the Contractor shall submit a revised Progress Schedule, if requested by the Engineer, which schedule shall show how he proposes to prosecute the balance of The Work. The Contractor shall submit the revised Progress Schedule within 10 days after the date of the request. The Contractor shall incorporate into every Progress Schedule submitted, any contract requirements regarding the order of performance of portions of The Work.

No payments will be made to the Contractor while he is delinquent in the submission of a Progress Schedule or a revised Progress Schedule.

108.04 Limitation of Operations

The Contractor shall conduct The Work at all times in such a manner and in such sequence as will assure the least interference with traffic and shall provide for smooth and safe traffic flow. It shall be the decision of the Engineer as to what will assure the least interference with traffic and smooth, safe traffic flow. Also, the Engineer may require the Contractor to finish a section on which work is in progress before work is started on any additional sections if the opening of such section is essential to public convenience.

108.05 Character of Workers, Methods and Equipment

The Contractor shall at all times employ sufficient labor and equipment for prosecuting the several classes of work to full completion in the manner and time required by these Specifications.

All workers shall have sufficient skill and experience to perform properly the work assigned to them. Workers engaged in special or skilled work shall have sufficient experience in such work and in the operation of the equipment required to perform all work properly and satisfactorily.

Any person employed by the Contractor or by any Subcontractor who the Engineer determines does not perform work in a proper and skilled manner or is intemperate or disorderly shall, at the written request of the Engineer, be removed forthwith by the Contractor or Subcontractor employing such person, and shall not be employed again in any portion of The Work without the approval of the Engineer.

Should the Contractor fail to remove such person or persons as required above, or fail to furnish suitable and sufficient personnel for the proper prosecution of The Work, the Engineer may suspend The Work by written notice until such orders are complied with.

All equipment that is proposed to be used on The Work shall be of sufficient size and in such mechanical condition as to meet the requirements of The Work and to produce a satisfactory quality of work. Equipment used on any portion of the Project shall be such that no injury to the roadway, adjacent property, or other highways will result from its use.

When the methods and equipment to be used by the Contractor in accomplishing the construction are not prescribed in the Contract, the Contractor is free to use any methods or equipment that he demonstrates to the satisfaction of the Engineer will accomplish The Work in conformity with the requirements of the Contract.

When the Contract specifies that the construction be performed by the use of certain methods and equipment, such methods and equipment shall be used unless others are authorized by the Engineer. If the Contractor desires to use a method or type of equipment other than those specified in the Contract, he may request authority from the Engineer to do so. The request shall be in writing and shall include a full description of the methods and equipment proposed to be used and an explanation of the reasons for desiring to make the change. If approval is given, it will be on the condition that the Contractor will be fully responsible for producing construction work in conformity with Contract requirements. If, after trial use of the substituted methods or equipment, the Engineer determines that the work produced does not meet Contract requirements, the Contractor shall discontinue the use of the substitute method or equipment and shall complete the remaining construction with the specified methods and equipment. The Contractor shall remove the deficient work and replace it with work of specified quality, or take such other corrective action as the Engineer may direct. No change will be made in basis of payment for the construction items involved nor in Contract Time as a result of authorizing a change in methods or equipment under these provisions.

108.06 Temporary Suspension of Work

The Engineer has the authority to suspend The Work wholly or in part, for as long as he may deem necessary, because of unsuitable weather, or other conditions considered unfavorable for continuing The Work, or for as long as he may deem necessary by reason of failure of the Contractor to carry out orders given, or to comply with any provisions of the Contract. No additional compensation will be paid the Contractor because of suspension. If it becomes necessary to stop The Work for an indefinite period, the Contractor shall store all materials in such a way that they will not impede the traveling public unnecessarily or become damaged in any way, and he shall take every precaution to prevent damage or deterioration of The Work done; provide suitable drainage of the roadway, and erect temporary structures where necessary. The Work shall be resumed when conditions are favorable or when corrective measures satisfactory to the Engineer have been applied; when, and as ordered by the Engineer in writing. The Contractor shall not stop The Work without authority.

If The Work is stopped by any temporary or permanent injunction, court restraining order, process or judgment of any kind, directed to either of the parties hereto, then such period or delay will not be charged against the Contract Time nor shall the Department be liable to the Contractor on account of such delay or termination of work

108.07 Determination of Contract Time

The definition of Contract Time and when Contract Time officially begins is stated in Subsection 101.19. After the Contract has been signed by all parties, Contract Time becomes the specified period of time, agreed upon by the Contractor, the Surety, and the Department, during which all Items and quantities of work set forth in the Proposal and included in the original Contract will be completed.

A. Available Day Contracts

An available day is defined in Subsection 101.04. The Engineer will furnish the Contractor a written monthly statement showing the total number of available days charged through the preceding month. The Contractor will be allowed one week in which to file a written protest setting forth in what respect said statement is incorrect, otherwise the statement shall be deemed to have been accepted by the Contractor as correct.

B. Calendar Day Contracts

When the Contract Time is on a calendar day basis it shall consist of the number of calendar days stated in the Contract counting from the date Contract Time starts as defined in Subsection 108.02, including all Sundays, holidays, and non-work days.

C. Completion Day Contracts

When the Contract completion time is a fixed date, it shall be the date on which all work on the Project shall be completed.

D. Settlement Periods

Settlement Periods shall be computed in calendar days unless otherwise stated in the contract documents.

E. Extension of Contract Time

If satisfactory fulfillment of the Contract requires performance of work in greater quantities than those set forth in the Proposal, the Contract Time allowed for performance shall be extended on a basis commensurate with the amount and difficulty of the added work as determined by the Engineer, whose decision shall be final and conclusive.

If the estimated time for the consolidation of embankments at bridge ends is extended, the Contract Time will be extended as provided in Subsection 208.3.05.B.3.

If the normal progress of The Work is delayed for reasons beyond his control, the Contractor shall, within 15 days after the start of such delay, file a written request to the Engineer for an extension of time setting forth therein the reasons and providing complete documentation for the delay which he believes will justify the granting of his request. The Contractor's plea that insufficient time was specified is not a valid reason for extension of time. If the Engineer finds that The Work was delayed because of conditions beyond the control and without the fault of the Contractor, he may extend the time for completion in such amount as the conditions justify.

Any authorized extension of the Contract Time will be in full force and effect the same as though it was the original Contract Time.

F. Suspension of Time Charges

If the Engineer suspends The Work by reason of failure of the Contractor to carry out written orders given, or to comply with any provision of the Contract, Time Charges will continue through the period of such suspension.

If the Contractor is declared in default, Time Charges will continue.

Except on Completion Date Contracts, Time Charges will not be made against the Contract when the only remaining controlling items of work are shut down by the Engineer because of seasonal limitations or temperature controls.

G. When Time Charges Cease

Time charges will cease when all work on Contract Items have been completed to the satisfaction of the Engineer. The only exception to this requirement is that a satisfactory growth of vegetative cover and application(s) of nitrogen will not be required when Time Charges are stopped, provided all filling of washes and repairs to planted areas have been accomplished. Maintenance of planted areas in order to produce a satisfactory growth after Time Charges have stopped will be performed without assessment of liquidated damages provided this work is diligently prosecuted. If, during this waiting period, maintenance of any part of the Project is inadequate, the Engineer may resume Time Charges 10 days after written notification to the Contractor and will continue Time Charges until the unsatisfactory conditions are corrected.

108.08 Failure or Delay in Completing Work on Time

Time is an essential element of the Contract, and any delay in the prosecution of The Work may inconvenience the public, obstruct traffic, or interfere with business. In addition to the aforementioned inconveniences, any delay in completion of The Work will always increase the cost of engineering. For this reason, it is important that The Work be pressed vigorously to completion. Should the Contractor or, in case of default, the Surety fail to complete The Work within the time stipulated in the Contract or within such extra time that may be allowed, charges shall be assessed against any money due or that may become due the Contractor in accordance with the following schedule:

Schedule of Deductions for Each Day of Overrun in Contract Time			
Original Contract Amount		Daily Charges	
From More Than	To and Including	Available Day	Calendar Day or Completion Date
$0	$500,000	$118	$84
$500,000	$1,000,000	$211	$151
$1,000,000	$2,000,000	$346	$247
$2,000,000	$5,000,000	$547	$391
$5,000,000	$10,000,000	$998	$713
$10,000,000	$20,000,000	$1667	$1191
$20,000,000	$40,000,000	$2617	$1869
$40,000,000	—	$7125	$5089

When the Contract Time is on either the calendar day or completion date basis, the schedule for calendar days shall be used. When the Contract Time is based on an available day basis, the schedule for available days shall be used.

For each Calendar Day or Available Day, as specified, that any work shall remain uncompleted after the contract time specified for the completion of The Work required by the Contract, the sum specified in the Contract will be deducted from any money due the Contractor, not as a penalty, but as liquidated damages; provided however, that due account shall be taken of any adjustment of the contract time for completion of the work granted under the provisions of Subsection 108.07.E.

The Department may waive such portions of the liquidated damages as may accrue after the work is in condition for safe and convenient use by the traveling public.

A. Liquidated Damages

The amount of such charges is hereby agreed upon as fixed liquidated damages due the Department after the expiration of the time for completion specified in the Contract. The Contractor and his Surety shall be liable for liquidated damages in excess of the amount due the Contractor on the final payment.

These fixed liquidated damages are not established as a penalty but are calculated and agreed upon in advance by the Department and the Contractor due the uncertainty and impossibility of making a determination as to the actual and consequential damages which are incurred by the Department, the State, and the general public as a result of the failure on the part of the Contractor to complete The Work on time.

3. **Deduction From Partial Payments:** Liquidated damages, as they accrue, will be deducted from periodic partial payments.
4. **Deduction From Final Payment:** The full amount of liquidated damages will be deducted from final payment to the Contractor and/or his Surety.
5. **No Liquidated Damages Charged for Delay by the Department:** In case of default of the Contract and the subsequent completion of The Work by the Department as hereinafter provided, the Contractor and his Surety shall be liable for the liquidated damages under the Contract, but no liquidated damages shall be chargeable for any delay in the final completion of The Work by the Department due to any unreasonable action, negligence, omission, or delay of the Department. In any suit for the collection of or involving the assessment of liquidated damages, the reasonableness of the amount shall be presumed. The liquidated damages referred to herein are intended to be and are cumulative and shall be in addition to every other remedy now or hereafter enforceable at law, in equity, by statute, or under the Contract.

B. No Waiver of Department's Rights

Permitting the Contractor to continue and finish The Work or any part of it after the expiration of the time allowed for completion or after any extension of time, shall not operate as a waiver of the rights of the Department under the Contract.

108.09 Default of Contract

If the Contractor fails to begin The Work within the time specified, or fails to perform The Work with sufficient workers, equipment, or materials to ensure its prompt completion, or performs The Work unsuitably, or neglects or refuses to remove materials or perform anew such work as shall be rejected as defective and unsuitable, or discontinues the prosecution of The Work, or from any other cause whatsoever does not carry on The Work in an acceptable manner, or becomes insolvent or is adjudicated a bankrupt, or commits any act of bankruptcy or insolvency, or allows any final judgement to stand against him unsatisfied for a period of 10 days, or makes an assignment for the benefit of creditors, or fails to comply with the contract requirements regarding wage payments or EEO requirements, or fails to sign the standard release form as stipulated in Subsection 109.08 "Final Payment," the Engineer may give notice in writing by registered or certified mail to the Contractor and the Surety, stating the nature of the deficiencies and directing that The Work including its progress be remedied and made satisfactory.

If, within 10 days after such notice, the Contractor or his Surety does not proceed in satisfactory way to remedy the faults specified in said notice, the Engineer will notify the Contractor and his Surety by registered or certified mail that the Contractor is in default and, by the same message, direct the Surety to take over The Work including all of the obligations pertaining to the Contract. If the Surety takes over the work in a satisfactory way within 10 days after such notice of default, the Department will thenceforth pay to the Surety the amounts due and to become due under the Contract, less all deductions provided herein including liquidated damages. The Department shall not be liable for any sums not due under the Contract and shall not be made a party to any dispute between the Contractor and the Surety.

If the Contractor is declared in default and The Work and other Contract obligations are taken over by the Surety as required by its Bond, and when all parts of The Work have been completed and found to be satisfactory by the Engineer, as provided for in Subsection 105.16 "Final Inspection and Acceptance," the said Surety is hereby constituted the attorney in fact of the Contractor for the purpose of executing such final releases as may be required by the Department or to do any other act or thing, including the execution of any documents, necessary to the completion of the Contract and a final settlement of same, including but not limited to those documents required by the provisions regarding final payment and release as set forth in Subsection 109.08.

For all purposes, as herein set out and defined, including the execution of documents necessary to the final completion and settlement of the Contract, the Surety, under such circumstances, is hereby authorized and directed by the Contractor to perform such acts and execute such documents as fully and completely as though the same were performed or executed by such contractor, and to be lawfully binding upon such Contractor as though such acts had been performed or such documents executed by him in person.

If the Surety does not take over The Work in a satisfactory way within 10 days after the notice of default, or does not proceed to finish The Work according to the Contract, the Department shall have full power and authority, without impairing the obligation of the Contract or the Contract Bond, to take over the completion of The Work; to appropriate or use any or all material and equipment on the ground that may be suitable, to enter into agreements with others for the completion of the Contract according to the terms and provisions thereof; or to use such other methods as may be required for the completion of the Contract. In so assuming the obligations of the Contractor, the Department does so as the agent of the Contractor. Assumption of these duties and obligations by the Department will not act as a release of the Contractor or his Surety from any of the provisions of this Contract. The Contractor and his Surety shall be liable for all costs incurred by the Department in completing The Work and also for all liquidated damages in conformity with the terms of the Contract. If the sum of such liquidated damages and the expense so incurred by the Department is less than the sum which would have been payable under this Contract if it had been completed by the Contractor or his Surety, the Contractor, or his Surety, shall be entitled to receive the difference; and if the sum of such expense and such liquidated damages exceeds the sum that would have been payable under the Contract, the Contractor and his Surety shall be liable and shall pay to the Department the amount of such excess. Notice to the Contractor shall be deemed to have been served when delivered to the person in charge of any office used by the Contractor, his representative at or near The Work or by registered or certified mail addressed to the Contractor at the last known place of business.

Time Charges shall continue through a period of a default in compliance with the provisions of Subsection 108.07.F.

108.10 Termination of Contractor's Responsibility

Except as specified in the Contract Bond and in Subsection 107.20, the Contractor's responsibility for The Work shall terminate upon final acceptance of The Work by the Department.

Section 109—Measurement and Payment

109.01 Measurement and Quantities

The method of measurement and computations to be used in determination of quantities of material furnished and of work performed under the Contract will be those methods generally recognized as conforming to good engineering practice.

Unless otherwise specified, longitudinal measurements for area computations will be made along the surface, and no deductions will be made for individual fixtures having an area of 9 ft^2 (1 m^2) or less. Unless otherwise specified, transverse measurements for area computations will be the neat dimensions shown on the Plans or ordered in writing by the Engineer.

Where payment is to be made by the square yard (square meter) for a specified thickness, the length will be measured on the surface along the centerline and the pay width shall be that width specified on the plans for the Final surface of the completed section. Intermediate courses shall be placed at a width sufficient to support successive courses with no detriment to the stability of the successive courses. The width of material required beyond the pay width will not be eligible for payment and shall be considered incidental to the work.

Structures will be measured according to neat lines shown on the Plans or as altered to fit field conditions.

All items which are measured by the linear foot (linear meter), such as pipe culverts, guard rail, underdrains, etc., will be measured parallel to the base or foundation upon which such structures are placed, unless otherwise shown on the Plans.

In computing volumes of excavation, the average end area method or other acceptable methods will be used.

The term "gage," when used in connection with the measurement of steel plates, will mean the U.S. Standard Gage.

When the term "gage" refers to the measurement of electrical wire it will mean the wire gage specified in the National Electrical Code.

The term "ton" will mean the short ton consisting of 2,000 pounds avoirdupois. The term "megagram" will mean one metric ton, equivalent to 1,000 kg. Any commodity paid for by weight shall be weighed on scales that have been approved as specified below and which are furnished at the expense of the Contractor or Supplier. Weighing and measuring systems including remote controls shall be subject to type-approval by the Department of Transportation. The manufacture, installation, performance, and operation of such devices located in Georgia shall conform to, and be governed by, the Official Code of Georgia, Annotated, Section 10-2-5 of the Georgia Weights and Measures Act, the Georgia Weights and Measures Regulations, as amended and adopted, the current edition of the National Bureau of Standards Handbook 44, and these Specifications. Weighing and measuring systems located outside Georgia which are utilized for weighing materials to be used in Department work shall be manufactured, installed, approved, and operated in accordance with applicable laws and regulations for the state in which the scales are located.

All weighing, measuring, and metering devices used to measure quantities for payment shall be suitable for the purpose intended and will be considered to be "commercial devices." Commodity scales located in Georgia shall be certified before use for accuracy, condition, etc., by the Weights and Measures Division of the Georgia Department of Agriculture, or its authorized representative. Scales located outside Georgia shall be certified in accordance with applicable laws and regulations for the state in which the scales are located. This certification shall have been made within a period of not more than one year prior to date of use for weighing commodity.

All equipment and all mechanisms and devices attached thereto or used in connection therewith shall be constructed, assembled, and installed for use so that they do not facilitate the perpetration of fraud. Any scale component or mechanism, which if manipulated would alter true scale values (including manual zero setting mechanisms) shall not be accessible to the scale operator. Such components and mechanisms that would otherwise be accessible to the scale operator shall be enclosed.

Provisions shall be made for security seals where appropriate on equipment and accessories. A security seal shall be affixed to any adjustment mechanism designed to be sealed. Scale or accessory devices shall not be used if security seals have been broken or removed.

Any certified scale or scale component which has been repaired, dismantled, or moved to another location shall again be tested and certified before it is eligible for weighing.

Whenever materials that are paid for based on weight are from a source within the State, the scales shall be operated by and the weights attested to by signature and seal of a duly authorized Certified Public Weigher in accordance with Standard Operating Procedure 15 and the Official Code of Georgia, Annotated, Section 10-2-5 of the Georgia Weights and Measures Act as amended and adopted. When such materials originate from another state that has a certified or licensed weigher program, the scales shall be operated by a weigher who is certified by that state in accordance with applicable laws, and weight ticket recordation shall be in accordance with Standard Operating Procedure 15.

When materials are paid for based on weight and originate from another state which has no program for certifying or licensing weighers, the materials shall be weighed on scales located in the State of Georgia by a Certified Public Weigher in accordance with Standard Operating Procedure 15 and the Official Code of Georgia, Annotated, Section 10-2-5 of the Georgia Weights and Measures Act as amended and adopted.

No scale shall be used to measure weights greater than the scale manufacturer's rated capacity. A digital recorder shall be installed as part of any commodity scale. The recorder shall produce a printed digital record on a ticket with the gross, tare, and net weights of the delivery trucks, along with the date and time printed for each ticket. Provisions shall be made so that the scales or recorders may not be manually manipulated during the printing process. The system shall be so interlocked as to allow printing only when the scale has come to rest. Either the gross or net weight shall be a direct scale reading. Printing and recording systems that are capable of accepting keyboard entries shall clearly and automatically differentiate a direct scale weight value from any other weight values printed on the load ticket.

All scales used to determine pay quantities shall be provided to attain a zero balance indication with no load on the load receiving element by the use of semi-automatic zero (push-button zero) or automatic zero maintenance.

Vehicle scales shall have a platform of sufficient size to accommodate the entire length of any vehicle weighed and shall have sufficient capacity to weigh the largest load. Adequate drainage shall be provided to prevent saturation of the ground under the scale foundation.

The Engineer, at his discretion, may require the platform scales to be checked for accuracy. For this purpose the Contractor shall load a truck with material of his choosing, weigh the loaded truck on his scales, and then weigh it on another set of certified vehicle scales. When the difference exceeds 0.4 percent of load, the scales shall be corrected and certified by a registered scale serviceman registered in the appropriate class as outlined in the Georgia Weights and Measures Regulations or in accordance with applicable requirements of the state in which the scales are located. A test report shall be submitted to the appropriate representative of the Department of Agriculture.

Materials to be measured by volume in the hauling vehicle shall be hauled in approved vehicles and measured therein at the point of delivery. Vehicles for this purpose may be of any size or type acceptable to the Engineer, provided that the body is of such shape that the actual contents may be readily and accurately determined. All vehicles shall be loaded to their water level capacity as determined by the Engineer, provided that the body is of such shape that the actual contents may be readily and accurately determined.

Cement and lime will be measured by the ton (megagram). Whenever cement or lime is delivered to the Project in tank trucks, a certified weight shall be made at the shipping point by an authorized Certified Public Weigher who is not an employee of the Department. Whenever cement and lime are from a source within the State, the scales shall be operated by the weights attested to by signature and seal of a duly authorized Certified Public Weigher in accordance with Standard Operating Procedure 15 and the Official Code of Georgia, Annotated, Section 10-2-5 of the Georgia Weights and Measures Act as amended and adopted. When such materials originate from another state that has a certified or licensed weigher program, the scales shall be operated by a weigher who is certified by that state in accordance with applicable laws, and the weight ticket recordation shall be in accordance with Standard Operating Procedure 15. When cement and lime originate from another state that has no program for certifying or licensing weighers, the materials shall be weighed on scales located in the State of Georgia by a Certified Public Weigher in accordance with Standard Operating Procedure 15 and the Official Code of Georgia, Annotated, Section 10-2-5 of the Georgia Weights and Measures Act as amended and adopted.

The shipping invoice shall contain the certified weights and the signature and seal of the Certified Public Weigher. A security seal shall also be affixed to the discharge pipe cap on the tank truck before leaving the shipping point. The number on the security seal shall also be recorded on the shipping invoice. The shipping invoice for quicklime shall also contain a certified lime purity percentage. Unsealed tank trucks will require reweighing by a Certified Public Weigher.

Timber will be measured by the thousand feet board measure (MFBM) (cubic meter) actually incorporated in the structure. Measurements will be based on nominal widths and thickness and the actual length in place. No additional measurement will be made for splices except as noted for overlaps as shown on the Plans.

The term "Lump Sum" when used as an item of payment will mean complete payment for The Work described in the Contract.

When a complete structure or structural unit (in effect, "Lump Sum" work) is specified as the unit of the measurement, the unit will be construed to include all necessary fittings and accessories.

Rental of equipment will be measured as defined in Subsection 109.05.B.4.

When standard manufactured items are specified as fence, wire, plates, rolled shapes, pipe conduits, etc., and these items are identified by gage, unit weight, section dimensions, etc., such identification will be considered to be nominal weights or dimensions. Unless more stringently controlled by tolerance in cited Specifications, manufacturing tolerances established by the industries involved will be accepted.

109.02 Measurement of Bituminous Materials

A. By Weighing the Material

The Department prefers this method whenever it is practicable. This method will be considered acceptable under the following conditions:

1. **Weighed On Project:** If the weights of the bituminous materials delivered by tank trucks are to be determined on the Project, weights shall be determined on scales that have been previously checked by the Department with standard weights for accuracy. The scale platform shall be large enough to accommodate the entire vehicle at one time. Under no conditions will truck scales be used to measure weights greater than their rated capacity. All weights not determined in the presence of an authorized representative of the Department shall be made by a Certified Public Weigher who is not an employee of the Department of Transportation and who is in good standing with the Georgia Department of Agriculture. The weight tickets shall carry both the signature and seal of the Certified Public Weigher.
2. **Weighed At Shipping Point:** A certified weight made at the shipping point by an authorized Certified Public Weigher who is not an employee of the Department of Transportation and who is registered with the Georgia Department of Agriculture, will be acceptable provided all openings in the tank have been sealed by the producer and when, upon inspection on the Project, there is no evidence of any leakage. The shipping ticket in this case must carry the signature and seal of the Certified Public Weigher. If the tank is not completely emptied the amount of material remaining in the tank truck will be measured by either weight or volume and the amount so determined, as verified by the Engineer, will be deducted from the certified weight.
3. **By Extraction Analysis:** The weight of bituminous material used will be determined by extraction tests made by the field laboratory. The average asphalt content for each Lot will be used to compute the weight of the Asphalt Cement to be paid for in accordance with the following formula:

<u>English:</u>

$$P = \% AC \times T$$

Where:

P = Pay Tons of Asphalt Cement
% AC = Lot average of % Asphalt Cement by weight of total mix as determined by extraction
T = Actual accepted tons of mixture as weighed

<u>Metric</u>:

$$P = \% AC \times T$$

Where:

P = Pay megagrams of Asphalt Cement
% AC = Lot average of % Asphalt Cement by weight of total mix as determined by extraction
T = Actual accepted megagrams of mixture as weighed

4. **By Digital Recording Device:** The amount of bituminous material as shown on the printed tickets will be the Pay Quantity.

B. By Volume

The volume will be measured and corrected for the difference between actual temperature and 60 °F (15 °C). Containers shall be level when measured, and one of the following methods shall be used, whichever is best suited to the circumstances:

1. **Tank Car Measurement:** If the material is shipped to the Project in railroad tank cars, the Contractor shall furnish the Engineer a certified chart showing the dimensions and volume for each inch (25 mm) of depth for each tank. The Engineer will make outage and temperature measurements before unloading is begun and after it is finished. The measurements will be taken when the bituminous material is at a uniform temperature and free from air bubbles. The Contractor shall not remove any bituminous material from any tank until necessary measurements have been made nor shall he release the car until final outage has been measured. The total number of gallons (liters) allowed for any tank car shall not be more than the U.S. Interstate Commerce Commission rating for that car, converted to gallons at 60 °F (15 °C).
2. **Truck Measurement:** If bituminous materials are delivered to the Project in tank trucks, distributor tanks, or drums, the Contractor shall not remove any bituminous material from the transporting vehicle or container until necessary measurements have been made, nor shall the transporting vehicle or container be released until final outage has been measured. If weighing is not convenient, the Contractor shall furnish the Engineer with a certified chart showing the dimensions and volume of each container together with a gauge or calibrated measuring rod which will permit the volume of the material to be determined by vertical measurement.
3. **Metering:** The volume may be determined by metering, in which case the metering device used and the method of using it shall be subject to the approval of the Engineer.
4. **Time of Deliveries:** The arrival and departure of vehicles delivering bituminous materials to the Project site shall be so scheduled that the Engineer is afforded proper time for the measurements of delivered volume and final outage. The Engineer will make the necessary measurements only during the Contractor's normal daily working hours.

C. Production for Multiple Projects

When a Contractor is producing Asphaltic Concrete from one plant, which is being placed on two or more jobs, public or private, the amount of bituminous material used may be determined by extraction tests in accordance with Subsection 109.02.A.3 or digital recording device in accordance with Subsection 109.02.A.4.

D. Tack Coat

When the same storage facility is utilized for Bituminous Materials to be used in Hot Mix Asphaltic Concrete, Bituminous Tack Coat, and/or Surface Treatment, the quantity used for Tack Coat shall be converted to tons (megagrams) and deducted from the quantities for the Bituminous Material used in the Hot Mix Asphaltic Concrete and Surface Treatment.

E. Corrections

When the volume and temperature have been determined as defined above, the volume will be corrected by the use of the following formula:

$$V_{English} = \frac{V1}{K\,(t-60) + 1} \qquad V_{metric} = \frac{V1}{K\,(t-15) + 1}$$

Where:

V = Volume of bituminous material at 60 °F (15 °C)
V1= Volume of hot bituminous material
t = Temperature of hot bituminous material in degrees Fahrenheit (Celsius)
K= Coefficient of Expansion of bituminous material (correction factor)

The correction factors K for various materials are given below:

- 0.00035 (0.00063) per °F (°C) for petroleum oils having a specific gravity of 60 °F/60 °F (15 °C/15 °C) above 0.966
- 0.00040 (0.00072) per °F (°C) for petroleum oils having a specific gravity of 60 °F/60 °F (15 °C/15 °C) between 0.850-0.966
- 0.00030 (0.00054) per °F (°C) for Tar
- 0.00025 (0.00045) per °F (°C) for Emulsified Asphalt
- 0.00040 (0.00072) per °F (°C) for Creosote Oil

109.03 Scope of Payment

The Contractor shall receive and accept the compensation provided for in the Contract as full payment for furnishing all materials, labor, tools, equipment, superintendence and incidentals, and for performing all work contemplated and embraced under the Contract in a complete and acceptable manner, for any infringement of patent, trademark or copyright, for all loss or damage arising from the nature of The Work, or from the action of the elements, for all expenses incurred by or in consequence of the suspension or discontinuance of The Work, or from any unforeseen difficulties which may be encountered during the prosecution of The Work and for all risks of every description connected with the prosecution of The Work until its Final Acceptance by the Engineer, except as provided in Subsection 107.16.

The payment of any partial estimate prior to Final Acceptance of the Project as provided in Subsection 105.16 shall in no way affect the obligation of the Contractor to repair or renew any defective parts of the construction or to be responsible for all damages due to such defects.

109.04 Payment and Compensation for Altered Quantities

When alteration in Plans or quantities of work not requiring Supplemental Agreements as herein before provided for are ordered and performed, the Contractor shall accept payment in full at the Contract Unit Bid Prices for the actual quantities of work done, and no allowance will be made for increased expense, loss of expected reimbursement, or loss of anticipated profits suffered or claimed by the Contractor, resulting either directly from such alterations, or indirectly from unbalanced allocation among the Contract Items of overhead expense on the part of the Bidder and subsequent loss of expected reimbursement therefore, or from any other cause.

Compensation for alterations in Plans or quantities of work requiring Supplemental Agreements shall be as stipulated in such agreement, except that when the Contractor proceeds with The Work without change of price being agreed upon, he shall be paid for such increased or decreased quantities at the Contract Unit Prices Bid in the Proposal for the Items of The Work.

109.05 Extra Work

Extra work, as defined in Subsection 101.27, when ordered in accordance with Subsection 104.04, will be authorized in writing by the Engineer. The authorization will be in the form of a Supplemental Agreement or a Force Account.

A. Supplemental Agreement

In the case of a Supplemental Agreement, the work to be done will be stipulated and agreed upon by both parties prior to any extra work being performed.

Payment based on Supplemental Agreements shall constitute full payment and settlement of all additional costs and expenses including delay and impact damages caused by, arising from or associated with The Work performed.

B. Force Account

When no agreement is reached for Extra Work to be done at Lump Sum or Unit Prices, such work may be authorized by the Department to be done on a Force Account basis. A Force Account estimate that identifies all anticipated costs shall be prepared by the Contractor on forms provided by the Engineer. Work shall not begin until the Force Account is approved. Payment for Force Account work will be in accordance with the following:

1. **Labor:** For all labor, equipment operators and supervisors, excluding superintendents, in direct charge of the specific operations, the Contractor shall receive the rate of wage agreed upon in writing before beginning work for each and every hour that said labor, equipment operators and supervisors are actually engaged in such work.

The Contractor shall receive the actual costs paid to, or in behalf of, workers by reason of subsistence and travel allowances, health and welfare benefits, pension fund benefits, or other benefits, when such amounts are required by collective bargaining agreement or other employment contract generally applicable to the classes of labor employed on The Work.

An amount equal to 15% of the sum of the above items will also be paid the Contractor.

2. **Bond, Insurance, and Tax:** For property damage, liability, and worker's compensation insurance premiums, unemployment insurance contributions, and Social Security taxes on the Force Account work, the Contractor shall receive the actual cost, to which cost no percentage will be added. The Contractor shall furnish satisfactory evidence of the rate or rates paid for such bond, insurance, and tax.
3. **Materials:** For materials accepted by the Engineer and used, the Contractor shall receive the actual cost of such material incorporated into The Work, including Contractor paid transportation charges (exclusive of machinery rentals as hereinafter set forth), to which cost 10% will be added.
4. **Equipment:** For any machinery or special equipment (other than small tools) including fuel and lubricant, plus transportation costs, the use of which has been authorized by the Engineer, the Contractor shall receive the rental rates indicated below for the actual time that such equipment is in operation on The Work or the time, as indicated below, the equipment is directed to stand by.

   Equipment rates shall be based on the latest edition of the *Rental Rate Blue Book for Construction Equipment* or *Rental Rate Blue Book for Older Construction Equipment*, whichever applies, as published by EquipmentWatch using all instructions and adjustments contained therein and as modified below.

   Allowable Equipment Rates shall be established as defined below:

   - Allowable Hourly Equipment Rate = Monthly Rate/176 x Adjustment Factors.
   - Allowable Hourly Operating Cost = Hourly Operating Cost.
   - Allowable Rate Per Hour = Allowable Hourly Equipment Rate + Allowable Hourly Operating Cost.
   - Standby Rate = Allowable Hourly Equipment Rate x 35%

NOTE: The monthly rate is the basic machine plus any attachments.

   Standby rates shall apply when equipment is not in operation and is directed by the Engineer to standby for later use. In general, Standby rates shall apply when equipment is not in use, but will be needed again to complete The Work and the cost of moving the equipment will exceed the accumulated standby cost. Payment for standby time will not be made on any day the equipment operates for 8 or more hours. For equipment accumulating less than 8 hours operating time on any normal workday, standby payment will be limited to only that number of hours which, when added to the operating time for that day equals 8 hours. Standby payment will not be made on days that are not normally considered workdays.

   The Department will not approve any rates in excess of the rates as outlined above unless such excess rates are supported by an acceptable breakdown of cost.

   Payable time periods will not include:

   - Time elapsed while equipment is broken down
   - Time spent in repairing equipment, or
   - Time elapsed after the Engineer has advised the Contractor the equipment is no longer needed

   If a piece of equipment is needed which is not included in the above *Blue Book* rental rates, reasonable rates shall be agreed upon in writing before the equipment is used. All equipment charges by persons or firms other than the Contractor shall be supported by invoices.

   Transportation charges for each piece of equipment to and from the site of The Work will be paid provided:

   - The equipment is obtained from the nearest approved source
   - The return charges do not exceed the delivery charges
   - Haul rates do not exceed the established rates of licensed haulers, and
   - Such charges are restricted to those units of equipment not already available and not on or near the Project

No additional compensation will be made for equipment repair.

5. **Miscellaneous:** No additional allowance will be made for general superintendence, the use of small tools, or other costs for which no specific allowance is herein provided.
6. **Compensation:** The Contractor's representative and the Engineer shall compare records and agree on the cost of work done as ordered on a Force Account basis at the end of each day on forms provided by the Department.
7. **Subcontract Force Account Work:** For work performed by an approved Subcontractor or Second-tier Subcontractor, all provisions of this Section (109.05) that apply to the Prime Contractor in respect to labor, materials and equipment shall govern. The prime Contractor shall coordinate the work of his Subcontractor. The prime Contractor will be allowed an amount to cover administrative cost equal to 5% of the Subcontractor's amount earned but not to exceed $5,000.00 per Subcontractor. Markup for Second-tier Subcontract work will not be allowed.

   Should it become necessary for the Contractor or Subcontractor to hire a firm to perform a specialized type of work or service which the prime Contractor or Subcontractor is not qualified to perform, payment will be made at reasonable invoice cost. To each invoice cost a markup to cover administrative cost equal to 5% of the total invoice but not to exceed $5,000.00 will be allowed the Contractor or Subcontractor but not both.
8. **Statements:** No payment will be made for work performed on a Force Account basis until the Contractor has furnished the Engineer with duplicate itemized statements of the cost of such Force Account work detailed as follows:
   a. Name, classification, date, daily hours, total hours, rate, and extension for each laborer, equipment operator, and supervisor, excluding superintendents.
   b. Designation, dates, daily hours, total hours, rental rate, and extension for each unit of machinery and equipment.
   c. Quantities of materials, prices, and extensions.
   d. Transportation of materials.
   e. Cost of property damage, liability, and worker's compensation insurance premiums, unemployment insurance contributions, and Social Security tax.

   Statements shall be accompanied and supported by invoices for all materials used and transportation charges. However, if materials used on the Force Account work are not purchased specifically for such work but are taken from the Contractor's stock, then, in lieu of the invoices, the Contractor shall furnish an affidavit certifying that such materials were taken from his stock, that the quantity claimed was actually used, and that the price and transportation claimed represent the actual cost to the Contractor.

   Payment based on Force Account records shall constitute full payment and settlement of all additional costs and expenses including delay and impact damages caused by, arising from or associated with The Work performed.

109.06 Eliminated Items

Should any Items contained in the Proposal be found unnecessary for the proper completion of The Work, the Engineer may, upon written order to the Contractor, eliminate such Items from the Contract, and such action shall in no way invalidate the Contract. When a Contractor is notified of the elimination of Items, he will be reimbursed for actual work done and all costs incurred, including mobilization of materials prior to said notifications.

109.07 Partial Payments

A. General

At the end of each calendar month, the total value of Items complete in place will be estimated by the Engineer and certified for payment. Such estimate is approximate only and may not necessarily be based on detailed measurements. Value will be computed on the basis of Contract Item Unit Prices or on percentage of completion of Lump Sum Items.

When so requested by the Contractor and approved by the Engineer, Gross Earnings of $500,000.00 or more for work completed within the first 15 days of any month will be certified for payment on a semi-monthly basis subject to the conditions and provisions of Subsection 109.07.A, Subsection 109.07.B.6, Subsection 109.07.C, Subsection 109.07.D, Subsection 109.07.E, and Subsection 109.07.F.

B. Materials Allowance

Payments will be made on delivered costs, or percentage of bid price if otherwise noted, with copies of paid invoices provided to the Department for the materials listed below which are to be incorporated into the Project provided the materials:

- Conform to all Specification requirements.
- Are stored on the Project Right-of-Way or, upon written request by the Contractor and written approval of the Engineer, they may be stored off the Right-of-Way, but local to the Project, provided such storage is necessary due to lack of storage area on the Right-of-Way, need for security, or need for protection from weather.

As a further exception to on-Project storage, upon written request by the Contractor, the Engineer may approve off-the-Project storage items uniquely fabricated or precast for a specific Project, such as structural steel and precast concrete, which will be properly marked with the Project number and stored at the fabrication or precast facility.

The Engineer may approve out-of-state storage for structural steel and prestressed concrete beams uniquely fabricated for a specific Project stored at the fabrication facility.

1. Paid invoices should accompany the materials allowance request, but in no case be submitted to the Project Engineer later than 30 calendar days following the date of the progress payment report on which the materials allowance was paid.

   In case such paid invoices are not furnished within the established time, the materials allowance payment will be removed from the next progress statement and no further materials allowance will be made for that item on that Project.
2. Materials allowances will be paid for those items which are not readily available, and which can be easily identified and secured for a specific project and for which lengthy stockpiling periods would not be detrimental. Some exclusions are as follows:
   a. No payments will be made on living or perishable plant materials until planted.
   b. No payments will be made on Portland Cement, Liquid Asphalt, or Grassing Materials.
   c. No payment will be made for aggregate stockpiled in a quarry. Payment for stockpiled aggregate will be made only if the aggregate is stockpiled on or in the immediate vicinity of the project and is held for the exclusive use on that project. The aggregate must be properly secured. If the aggregate stockpiled is to be paid for per-ton (megagram) it must be reweighed on approved scales at the time it is incorporated into the Project.
   d. No payments will be made on minor material items, hardware, etc.
3. No materials allowance will be made for materials when it is anticipated that those materials will be incorporated into The Work within 30 calendar days.
4. No materials allowance will be made for a material when the requested allowance for such material is less than $25,000.
5. Where a storage area is used for more than one project, material for each project shall be segregated from material for other projects, identified, and secured. Adequate access for auditing shall be provided. All units shall be stored in a manner so that they are clearly visible for counting and/or inspection of the individual units.
6. The Commissioner may, at his discretion, grant waiver to the requirements of this Section when, in his opinion, such waiver would be in the public interest.

   Subsequently, in the event the material is not on-hand and in the quantities for which the materials allowance was granted, the materials allowance payment will be removed from the next progress statement and no further materials allowance will be made for those items on that Project. If sufficient earnings are not available on the next progress statement, the Contractor agrees to allow the Department to recover the monies from any other Contract he may have with the Department, or to otherwise reimburse the Department.

   Payments for materials on hand shall not exceed the invoice price or 75 percent of the bid prices for the pay items into which the materials are to be incorporated, whichever is less.

C. Minimum Payment

No partial payment will be made unless the amount of payment is at least $1000.00.

D. Liquidated Damages

Accrued liquidated damages will be deducted in accordance with Subsection 108.08.

E. Other Deductions

In addition to the deductions provided for above, the Department has the right to withhold any payments due the Contractor for items unpaid by the Contractor for which the Department is directly responsible, including, but not limited to, royalties (see Section 106).

F. Amount of Payment

The balance remaining after all deductions provided for herein have been made will be paid to the Contractor. Partial estimates are approximate and are subject to correction on subsequent progress statements. If sufficient earnings are not available on the subsequent progress statement, the Contractor agrees to allow the Department to recover the monies from any other Contract he may have with the Department, or to otherwise reimburse the Department. The Engineer is responsible for computing the amounts of all deductions herein specified, for determining the progress of the Work and for the items and amounts due to the Contractor during the progress of the Work and for the final statement when all Work has been completed.

G. Interest

Under no circumstances will any interest accrue or be payable on any sums withheld or deducted by the Department as authorized by Subsection 109.07.A, Subsection 109.07.B.6, Subsection 109.07.C, Subsection 109.07.D, Subsection 109.07.E, and Subsection 109.07.F.

H. Insert the Following in Each Subcontract

The Contractor shall insert the following in each Subcontract entered into for work under this Contract:

"The Contractor shall not withhold any retainage on Subcontractors. The Contractor shall pay the Subcontractor 100% percent of the gross value of the Completed Work by the Subcontractor as indicated by the current estimate certified by the Engineer for payment."

Neither the inclusion of this Specification in the Contract between the Department and the Prime Contractor nor the inclusion of the provisions of this Specification in any Contract between the Prime Contractor and any of his Subcontractors nor any other Specification or Provision in the Contract between the Department and the Prime Contractor shall create, or be deemed to create, any relationship, contractual or otherwise, between the Department and any Subcontractor.

109.08 Final Payment

When Final Inspection and Final Acceptance have been made by the Engineer as provided in Subsection 105.16, the Engineer will prepare the Final Statement of the quantities of the various classes of work performed. All prior partial estimates and payments shall be subject to correction in the Final Statement. The District Engineer will transmit a copy of the Statement to the Contractor by Registered or Certified Mail. The Contractor will be afforded 20 days in which to review the Final Statement in the District Office before it is certified for payment by the Engineer. Any adjustments will be resolved by the District Engineer or in case of a dispute referred to the Chief Engineer whose decision shall be final and conclusive. After approval of the Final Statement by the Contractor, or after the expiration of the 20 days, or after a final ruling on disputed items by the Chief Engineer, the Final Statement shall be certified to the Treasurer by the Chief Engineer stating the Project has been accepted and that the quantities and amounts of money shown thereon are correct, due and payable.

The Treasurer, upon receipt of the Engineer's certification, shall in turn furnish the Contractor with the Department's Standard Release Form to be executed in duplicate. The aforesaid Release Form, showing the total amount of money due the Contractor, shall be sent to the Contractor by Registered or Certified Mail, to be delivered to such Contractor upon the signing of a return receipt card, to be returned to the Department in accordance with the provision of Federal law in respect to such matters and such return receipt card shall be conclusive evidence of a tender of said sum of money to the Contractor. Upon receipt of the properly executed Standard Release Form, the Treasurer shall make final payment jointly to the Contractor and his Surety. The aforesaid certification, executed release form, and final payment shall be evidence that the

Commissioner, the Engineer, and the Department have fulfilled the terms of the Contract, and that the Contractor has fulfilled the terms of the Contract except as set forth in his Contract Bond.

The Standard Release Form is to be executed by the Contractor within 120 days after delivery thereof, as evidenced by the Registered or Certified Mail Return Receipt. Should the Contractor fail to execute the Standard Release Form because he disputes the Final Payment as offered, or because he believes he has a claim for damages or additional compensation under the Contract, the Contractor shall, within 120 days after delivery to the Contractor of the Standard Release Form, as evidenced by the Registered or Certified Mail Return Receipt, enter suit in the proper court for adjudication of his claim. Should the Contractor fail to enter suit within the aforesaid 120 days, then by agreement hereby stipulated, he is forever barred and stopped from any recovery or claim whatsoever under the terms of this Contract.

Should the Contractor fail to execute the Standard Release Form or file suit within 120 days after delivery thereof, then the Surety on the Contractor's Bond is hereby constituted the attorney-in-fact of the Contractor for the purpose of executing such final releases as may be required by the Department, including but not limited to the Standard Release Form, and for the purpose of receiving the Final Payment under this Contract.

The Department reserves the right as defined in Subsection 107.20, should an error be discovered in any estimates, to claim and recover from the Contractor or his Surety, or both, such sums as may be sufficient to correct any error of overpayment. Such overpayment may be recovered from payments due on current active Projects or from any future State work done by the Contractor.

The foregoing provisions of this Section shall be applicable both to the Contractor and the Surety on his Bond; and, in this respect, the Surety shall be bound by the provisions of Subsection 108.09 of these Specifications in the same way and manner as the Contractor.

A. Interest

In the event the Contractor fails to execute the *Standard Release Form* as prepared by the Treasurer because he disputes the amount of the final payment as stated therein, the amount due the Contractor shall be deemed by the Contractor and the Department to be an unliquidated sum and no interest shall accrue or be payable on the sum finally determined to be due to the Contractor for any period prior to final determination of such sum, whether such determination be by agreement of the Contractor and the Department or by final judgement of the proper court in the event of litigation between the Department and the Contractor. The Contractor specifically waives and renounces any and all rights it may have under Section 13-6-13 of the Official Code of Georgia and agrees that in the event suit is brought by the Contractor against the Department for any sum claimed by the Contractor under the Contract, for delay damages resulting from a breach of contract, for any breach of contract or for any extra or additional work, no interest shall be awarded on any sum found to be due from the Department to the Contractor in the final judgement entered in such suit. All final judgements shall draw interest at the legal rate, as specified by law. Also, the Contractor agrees that notwithstanding any provision or provisions of Chapter 11 of Title 13 of the Official Code of Georgia that the provisions of this contract control as to when and how the Contractor shall be paid for The Work. Further, the Contractor waives and renounces any and all rights it may have under Chapter 11 of Title 13 of the Official Code of Georgia.

B. Termination of Department's Liability

Final payment will be in the amount determined by the statement as due and unpaid. The acceptance of the final payment or execution of the Standard Release Form or failure of the Contractor to act within 120 days as provided herein after tender of payment, or final payment to the Contractor's Surety in accordance with the provisions stipulated herein, shall operate as and be a release to the Department, the Commissioner, and the Engineer from all claims of liability under this contract and for any act or neglect of the Department, the Commissioner, or the Engineer.

109.09 Termination Clause

A. General

The Department may, by written notice, terminate the Contract or a portion thereof for the Department's convenience when the Department determines that the termination is in the State's best interest, or when the Contractor is prevented from proceeding with the Contract as a direct result of one of the following conditions:

1. An Executive Order of the President of the United States with respect to the prosecution of war or in the interest of national defense.
2. The Engineer and Contractor each make a determination, that, due to a shortage of critical materials required to complete the Work which is caused by allocation of these materials to work of a higher priority by the Federal Government or any agency thereof, it will be impossible to obtain these materials within a practical time limit and that it would be in the public interest to discontinue construction.
3. An injunction is imposed by a court of competent jurisdiction which stops the Contractor from proceeding with the Work and causes a delay of such duration that it is in the public interest to terminate the Contract and the Contractor was not at fault in creating the condition which led to the court's injunction.

   The decision of the Engineer as to what is in the public interest and as to the Contractor's fault, for the purpose of Termination, shall be final.
4. Orders from duly constituted authority relating to energy conservation.

B. Implementation

When, under any of the conditions set out in Subsection A of this Section, the Contract, or any portion thereof, is terminated before completion of all Items of Work in the Contract, the Contractor shall be eligible to receive some or all of the following items of payment:

1. For the actual number of units of Items of Work completed, payment will be made at the Contract Unit Price.
2. Reimbursement for organization of the Work and moving equipment to and from the job will be considered where the volume of work completed is too small to compensate the Contractor for these expenses under the Contract Unit Prices. However, the Engineer's decision as whether or not to reimburse for organization of the Work and moving equipment to and from the job, and in what amount, shall be final.
3. Acceptable materials, obtained by the Contractor for the Work, that have been inspected, tested, and accepted by the Engineer, and that are not incorporated in the Work will, at the request of the Contractor, be purchased from the Contractor at actual cost as shown by receipted bills and actual cost records at such points of delivery as may be designated by the Engineer. This will include any materials that have been delivered to the project site or that have been specifically fabricated for the project and are not readily usable on other projects. It will not include materials that may have been ordered, but not delivered to the project site and that are readily usable on other projects (e.g., guard rail, stone, lumber, etc.).
4. For Items of Work partially completed, payment adjustments including payments to afford the Contractor a reasonable profit on work performed, may be made as determined by the Engineer based upon a consideration of costs actually incurred by the Contractor in attempting to perform the Contract.
5. No payment will be made, and the Department will have no liability, for lost profits on Work not performed. In particular, the Department will not be liable to the Contractor for all profits the Contractor expected to realize had the Project been completed, nor for any loss of business opportunities, nor for any other consequential damages.
6. In order that the Department may make a determination of what sums are payable hereunder, the Contractor agrees that, upon termination of the Contract, it will make all of its books and records available for inspection and auditing by the Department.

   To be eligible for payment, costs must have been actually incurred, and must have been recorded and accounted for according to generally accepted accounting principles, and must be items properly payable under Department policies. Where actual equipment costs cannot be established by the auditors, payment for unreimbursed equipment costs will be made in the same manner as is provided in Subsection 109.05 for Force Account Work. Idle time for equipment shall be reimbursed at standby rates. In no case will the Contractor be reimbursed for idle equipment after the Engineer has advised the Contractor the equipment is no longer needed on the job. Refusal of the Contractor to allow the Department to inspect and audit all of the Contractor's books and records shall conclusively establish that the Department has no liability to the Contractor for any payment under this provision, and shall constitute a waiver by the Contractor of any claim for damages allegedly caused by breach or termination of the Contract. The amount payable under this provision, if any, is to be determined by the Engineer, whose determination will be final and binding.
7. The sums payable under this Subsection shall be the Contractor's sole and exclusive remedy for termination of the Contract.

C. Termination of a Contract

Termination of a Contract or a portion thereof shall not relieve the Contractor of his responsibilities for any completed portion of the Work, nor shall it relieve his Surety of its obligation for and concerning any just claims arising out of the Work performed.

109.10 Interest

In the event any lawsuit is filed against the Department alleging the Contractor is due additional money because of claims or for any breach of contract, the Contractor hereby waives and renounces any right it may have under O.C.G.A. Section 13-6-13 to prejudgment interest. Also, the Contractor agrees that notwithstanding any provision or provisions of Chapter 11 of Title 13 of the Official Code of Georgia that the provisions of this contract control as to when and how the Contractor shall be paid for The Work. Further, the Contractor waives and renounces any and all rights it may have under Chapter 11 of Title 13 of the Official Code of Georgia.

Section 148—Pilot Vehicles

148.1 General Description

Specifications for this work will be included elsewhere in the Contract.

Section 149—Construction Layout

149.1 General Description

Perform construction layout to guide and control performance of items of the work according to this Specification.

This work includes:

- Placing, replacing (if necessary), and maintaining construction layout points.
- Preparing construction layout drawings, sketches, and computations.
- Recording data in field books such as alignment, slope stake, blue top, drainage layout, bridge, and other books used for layout for this Project.

149.1.01 Definitions

General Provisions 101 through 150

149.1.02 Related References

A. Standard Specifications

General Provisions 101 through 150

B. Referenced Documents

General Provisions 101 through 150

149.1.03 Submittals

Submit the following documentation to the Department:

A. Project Construction Records

These records detail information that the Department uses to determine the template line for the as-built cross sections, which defines the computation line for unclassified excavation. These records include:

- Survey records
- Bound field notebooks
- Computer printouts that record the Project's construction

Prepare the records as directed by the Engineer.

B. Survey Documents

Furnish the Engineer with a copy of survey documents that relate to construction layout. Provide these documents when the Engineer requests or as they are completed. The Engineer may check the documents for accuracy and may require revisions where necessary. The documents become Department property and will be included in the permanent Project records.

C. Drainage Structure Sketches

Profile both inlet and outlet ends of proposed drainage structures for at least 100 ft (30 m) in the existing ditch line or stream bed. Adjust flowline elevations, if necessary, to enhance the hydraulics and to reduce silting, scouring, or backwater.

Calculate the length of each structure and provide sketches of the structure to the Engineer for review and approval at least 24 hours before beginning the work.

D. Bridge Layout Sketch

Furnish a layout sketch before staking on bridges. After staking, submit a revised sketch for the Engineer's review and approval before beginning construction. Include in the layout sketch relevant stations, angles, dimensions, and redundant checks including exterior beam dimensions in each span. Also include all horizontal and vertical clearances with calculations that verify the clearances shown.

Submit for the Engineer's review and approval survey data and calculations with the layout sketch and information required for bent construction.

Verify the Plan elevations for all bridge bearing seats on the substructure.

E. Wall Layout Sketches

Submit sketches and other data verifying either that the wall will fit the final field conditions, or indicate where revisions are necessary. Submit these sketches well before the wall construction begins so the Engineer can make any necessary structural design changes.

149.2 Materials

General Provisions 101 through 150

149.2.01 Delivery, Storage, and Handling

General Provisions 101 through 150

149.3 Construction Requirements

General Provisions 101 through 150

149.3.01 Personnel

Furnish personnel capable of establishing line and grade points necessary to complete the work. Establish these points within the generally accepted surveying tolerances, and ensure that they are acceptable for the work being performed.

149.3.02 Equipment

Furnish surveying equipment, stakes, and all materials necessary to perform the work, subject to the Engineer's approval.

149.3.03 Preparation

A. General Pre-Construction

Before beginning construction:

1. Ensure that plan dimensions, alignment, and elevations are compatible with existing field conditions. Make adjustments where necessary.
2. Ensure alignment tie-ins by coordinating construction layout with that of other Contractors whose work abuts any portion of the work. All adjustments are subject to the Engineer's approval.

B. Widening and Reconstruction

Before beginning construction where existing pavement is to be retained either for widening or for reconstruction:

1. Take three-point levels of the pavement throughout the length to be retained.

   Normally, the three-point levels will be required at 50 ft (15 m) intervals. However, the Engineer may adjust these intervals according to existing field conditions. Three-point levels are not required on asphalt shoulder widening projects and earth shoulder reconstruction projects.
2. From the three-point levels, prepare a graphic grade plot that "best fits" the existing pavement to minimize the leveling requirements (if any) of the existing roadway. Cross slopes may be varied within the ranges shown on the Plans or adjusted by the Engineer to produce the "best fit."
3. On passing lane or widening Projects where existing pavement is not to be overlaid:
   a. Profile and plot the outside edge of the existing pavement to obtain a smooth profile grade.
   b. Transfer this grade to the new edge of paving using the proper cross slope.
4. Furnish data to the Engineer for approval before beginning widening and reconstruction.
5. On widening, reconstruction, or passing lane projects, obtain the Engineer's approval of the "best fit" profile. Ensure that grade stakes are set to control the construction of any required widening based upon the "best fit" profile and cross slope. Construct proposed widening flush with the existing edge of paving. Provide positive drainage in all cases.

C. Existing Bridge Widening or Modification

To widen or modify existing bridges, do the following before ordering materials or beginning construction:

1. Verify existing elevations and dimensions as well as confirm or determine required new cap elevations.
2. Profile the removal line and cross section the existing deck.
3. Use this profile information to determine a "best fit" finished grade for the widened portion.
4. Compute the new cap elevations based on this "best fit" information.
5. Furnish survey data, layout sketch, and calculations to the Engineer for approval.

D. Retaining Wall Construction Layout

Set stakes, take necessary cross sections, and perform necessary calculations at each wall before beginning wall construction to ensure that the geometric design of the retaining wall conforms to actual conditions.

149.3.04 Fabrication

General Provisions 101 through 150

149.3.05 Construction

A. Verify Plan Elevations

Verify plan elevations for all bridge bearing seats on the substructure.

B. Verify Bent Layout

After bent construction has begun, verify bent layout at each major phase of the construction to ensure that the bent is properly positioned in relation to adjacent bents.

C. Establish the Centerline

Establish the centerline as follows:

1. Establish or reestablish the centerline from the monuments and/or reference points the Department will provide.
2. On widening or reconstruction Projects, establish the horizontal and vertical alignment of the existing roadway and bridges.
3. Modify the Plan horizontal and vertical alignment to conform to the existing alignment as necessary.

D. Verify the Accuracy of the Bench Mark(s)

The Department will furnish at least one bench mark that the Contractor shall preserve, and if necessary, relocate as follows:

a. Verify the accuracy of the bench mark(s) and report discrepancies to the Engineer.

b. Establish additional benchmarks needed for construction.

c. Maintain the bench marks for necessary Department checks.

E. Flag In-Place Survey Control Monuments

Flag and protect in-place survey control monuments and reference points, including Right-of-Way/property line intersections, as follows:

1. Pay for and replace destroyed or disturbed stakes or monuments.
2. When included as Pay Items, stake Right-of-Way markers.

F. Line, Grades, and Stakes

Set other line and grade stakes needed to construct the job, including stakes needed to relocate utilities. Stake the Right – of-Way and maintain throughout the life of the project. Restake flattened slopes, minor grade or alignment changes, and other incidentals.

G. Stake Centerline Control Alignments

Stake centerline control alignments shown on the Plans or adjusted as described above when the Department needs accurate measurement of quantities for payment. Stake these control alignments as follows:

1. Stake the alignments to an accuracy of 1:5000.
2. Stake the alignments just before the Department takes aerial photography or field cross sections for both original and final cross sections.
3. Provide the Department with elevations of positions staked for the Department's quantity measurements. Ensure that these elevations are of third order accuracy, or better. Determine them using the differential leveling method.
4. Take intermediate cross sections required because of stage construction, detours, or other reasons.

H. Provide Graphic Sketches

Prepare and use graphic sketches of superelevation runout on curves on multi-lane roadways and of tie-ins of ramps to mainline on freeways and expressways to help provide positive drainage, adequate superelevation, and a pleasing appearance. Prepare and use similar sketches for street or roadway intersections.

I. Maintain the Stakes

After construction has begun in any segment of the Project, maintain the stakes that identify construction station numbers and locations as follows:

1. Ensure that stakes are placed at intervals not to exceed 200 ft (60 m) and use even, 100 ft (30 m) stations. On asphalt shoulder widening and earth shoulder reconstruction projects use mile post numbers when stations are not used.

   Mark and flag stakes so that they are visible to DOT Project personnel in that segment of the Project until construction is complete.

   Projects utilizing GPS controlled fine grading equipment, place stakes at intervals not to exceed 300 ft (91 m) on English projects and 100 m (310 ft) on metric projects. Use even, 100 ft (30 m) or 100 m (310 ft), stations.
2. During grading activities in fills or cuts over 20 ft (6 m), extend slope stakes up or down the slopes in intervals of 10 ft (3 m) or less to achieve an accurate cross section.
3. Denote the offset distance to the construction centerline on the station number stakes, when the station number is maintained in a location other than on the construction centerline. On asphalt shoulder widening and earth shoulder reconstruction projects use the offset to the edge of pavement on the stakes.

J. Traffic Markings

When traffic markings are to be placed by either the Contractor or others, furnish the layout and clean and preline the surface to allow the placement of permanent pavement markings on the Project.

When traffic markings are not included in the Project plans, the Department will provide striping plans and/or standard drawings for the Contractor's use.

K. Provide Bridge Construction Layout

Provide alignment control, grade control, and calculations to set these controls for bridge construction.

For new bridges, the Department will furnish the necessary input data forms for the Department's "Bridge Geometry" computer program upon the Contractor's request. The Department will process the data to help the Contractor obtain finished deck elevations.

Data processing is available only as an alternate service to determine elevations. If this service is elected for use, prepare the input data and the Department will furnish the output data. The following limitations apply:

- The Department will not assume liability for the accuracy of either input or output data.
- The Department will limit this service to two programs per bridge.
- This service is not available for existing bridges that are to be widened. Finished deck elevations for bridges that are to be widened will not be furnished.

149.3.06 Quality Acceptance

The Engineer's acceptance of all or any part of the Contractor's layout shall not relieve the Contractor of responsibility to secure proper dimensions for the completed work. Correct at the Contractor's expense work incorrectly located due to layout error.

149.3.07 Contractor Warranty and Maintenance

General Provisions 101 through 150

149.4 Measurement

This item is not measured for payment.

149.4.01 Limits

General Provisions 101 through 150

149.5 Payment

This work is not paid for separately. The costs for performing layout work as described in this Specification are included in the bid for the items of work to which the layout is incidental.

Any unnecessary work, overruns, costs, etc., resulting from inaccurate data submitted by the Contractor will be deducted from Contractor payments.

149.5.01 Adjustments

General Provisions 101 through 150.

Section 150—Traffic Control

150.1 General Description

Specifications for this work will be included elsewhere in the Contract.

Section 151—Mobilization

151.1 General Description

Mobilization, when listed as a pay item in the Proposal, includes preparatory work and operations, including but not limited to, moving personnel, equipment, supplies, and incidentals to the Project site. Mobilization also includes all other work and operations that shall be performed or costs incurred before beginning work on the various Items on the Project site.

151.1.01 Definitions

General Provisions 101 through 150.

151.1.02 Related References

A. Standard Specifications

General Provisions 101 through 150.

B. Referenced Documents

General Provisions 101 through 150.

151.1.03 Submittals

General Provisions 101 through 150.

151.2 Materials

General Provisions 101 through 150.

151.2.01 Delivery, Storage, and Handling

General Provisions 101 through 150.

151.3 Construction Requirements

General Provisions 101 through 150.

151.3.01 Personnel

General Provisions 101 through 150.

151.3.02 Equipment

General Provisions 101 through 150.

151.3.03 Preparation

General Provisions 101 through 150.

151.3.04 Fabrication

General Provisions 101 through 150.

151.3.05 Construction

General Provisions 101 through 150.

151.3.06 Quality Acceptance

General Provisions 101 through 150.

151.3.07 Contractor Warranty and Maintenance

General Provisions 101 through 150.

151.4 Measurement

This item of work is not measured separately for payment.

151.4.01 Limits

The total sum of payments shall not exceed the original Contract amount bid for this item.

151.5 Payment

The Department will make partial payments as follows:

1. The first regular payment is 50 percent of the amount bid for mobilization, or 3 percent of the original Contract amount, whichever is less.
2. When 5 percent of the original contract amount is earned, the next progress payment is 100 percent of the amount bid for mobilization, or 3 percent of the total original contract amount, whichever is less, minus any previous payments.
3. Any amount bid for mobilization in excess of 3 percent of the original Contract amount is paid when work on the Project is complete.
4. The total sum of the payments shall not exceed the original Contract amount bid for this item.

Payment includes all costs for mobilization, demobilization, and remobilization as required to complete the work.

Payments will be made under:

Item No. 151	Mobilization	Per lump sum

151.5.01 Adjustments

General Provisions 101 through 150.

Section 152—Field Laboratory Building

152.1 General Description

This work includes furnishing and maintaining field laboratory buildings, if required by the Contract. The building is reserved for the Engineer's exclusive use as long as the Engineer deems necessary.

152.1.01 Definitions

General Provisions 101 through 150.

152.1.02 Related References

A. Standard Specifications

Section 400—Hot Mix Asphaltic Concrete Construction

Section 402—Hot Mix Recycled Asphaltic Concrete

B. Referenced Documents

AASHTO TP4

AASHTO T166

AASHTO T209

AASHTO T309

GDT 125, "Method of Test for Determining Asphalt Content by Ignition"

NFPA–10A

152.1.03 Submittals

General Provisions 101 through 150.

152.2 Materials

General Provisions 101 through 150.

152.2.01 Delivery, Storage, and Handling

General Provisions 101 through 150.

152.3 Construction Requirements

General Provisions 101 through 150.

152.3.01 Personnel

General Provisions 101 through 150.

152.3.02 Equipment

General Provisions 101 through 150.

152.3.03 Preparation

General Provisions 101 through 150.

152.3.04 Fabrication

General Provisions 101 through 150.

152.3.05 Construction

A. Field Laboratory Physical Requirements

Provide a laboratory using a structure approved by the Engineer, such as a:

- Building
- Trailer
- Fixed building erected on the site
- Vacated house at an approved location

Each field laboratory shall house the required testing equipment and meet the minimum requirements for dimensions, space, and facilities.

Each building or trailer shall be at least 7 ft (2.1 m) wide and 7 ft (2.1 m) high inside and contain not less than 120 ft^2 (11 m^2) of floor space. Each unit shall be floored, roofed, and weather tight and contain the following:

- At least one hinged or sliding window on each side with each window having at least 6.5 ft^2 (0.6 m^2) of openings
- An entrance door that can be securely locked
- Built-in work table with at least two drawers (one lockable)
- Lighting and ventilation
- Heating with necessary fuel
- Potable running water
- Electric current
- Sheds and platforms required for special testing equipment
- Sanitary Facilities—Include in each field laboratory sanitary facilities that meet the requirements of the local or State Health Departments.
- Fire Extinguisher—Equip each building with at least one approved fire extinguisher that meets the following requirements:
  1) Multipurpose dry chemical type extinguisher
  2) Underwriters Laboratory rating of 4A-40BC

  Mount the extinguisher(s) in a convenient and conspicuous place that is easily accessible from any part of the building. Maintain the extinguisher(s) in working condition according to the requirements of NFPA–10A.

B. Plant Laboratory Physical Requirements

Provide laboratory buildings at asphalt, concrete, or base plants. Place the buildings so that the plant is in full view from one of the windows.

C. Number of Laboratories Required

The number of laboratories shown in the Proposal is based on estimated job requirements. Actual conditions may require more or fewer. Provide the quantity as required by the Engineer at the Unit Price Bid for the facility.

D. Asphaltic Concrete Plant Laboratory Requirements

1. **Laboratory Building.** Provide a laboratory building that meets the minimum requirements for a Field Laboratory as described in Subsection 152.3.05.A.
2. **Ventilation System.** Equip the laboratory so that when the windows and doors are closed and the ventilation system is functioning as required, the temperature can be maintained between 65 °F and 80 °F (18 °C and 27 °C).
3. **Enclosures.** Provide enclosures in laboratories for procedures where extracting solvent vapors are emitted. After the asphalt is extracted, dry samples under an enclosure or inside an oven that is vented outside the lab. Provide enclosures as follows:

Equip each enclosure with the following:

- A hood, glass, or other doors capable of enclosing the extracting solvent vapors from the ambient air in the lab
- An exhaust fan located in the rear or top of the hood for each work compartment
- Replacement air provided through an open window or other opening to achieve the specified exchange of air
- Ventilation system capable of exchanging air at the rate of 100 $ft^3/ft^2/min$ (30 $m^3/m^2/min$) over the entire open door area of each enclosure

Locate the laboratory ventilation, heating, and cooling systems so that the exhausted extracting solvent vapors do not re-enter the laboratory through either the heating or cooling systems.

Ensure that the extracting solvent is supplied to the laboratory through a closed-system opening only under the enclosures.

Mount the storage containers for the extracting solvent outside the laboratory and run a feed line from the container to a cut-off valve located in the enclosures. Ensure that all parts of the enclosures, hoods, and other related equipment are functional during testing.

4. **Platform.** Provide a safe platform to the proper height for the Inspector to use to obtain asphalt mix or base samples and to inspect mixes in the truck beds.
5. **Testing Equipment.** Furnish and maintain in good condition at the field laboratory the following testing equipment. All testing equipment is subject to the Engineer's approval.
   a. One each—Oven (mechanical convection, range to 400 °F (204 °C). Comparable to Blue M Model OV-560A-2.

   NOTE: Vent the oven exhaust outside the laboratory.

   b. One each—Sieve Shaker (Ro-Tap design or approved equal). Designed for Standard 8 in (203 mm) diameter sieve.
   c. One each—
      - Computer, IBM or IBM Compatible
      - 540 Megabyte Hard Disk Drive (Minimum)
      - 3 ½ inch (90 mm) High Density Floppy Disk Drive
      - CD-ROM Drive (4X Minimum)
      - Mouse
      - Modem 9600 Baud (Minimum)
      - 1 Parallel and 2 Serial Ports
      - 16 Megabyte Random Access Memory Expandable to at Least 32 Megabytes
      - VGA Monitor
      - 486 Microprocessor Operating at 33 Megahertz (Minimum)
   d. One each—Printer (Desk Jet HP Letter Quality Printer)
   e. One each—Electronic balance with weighing capacity of at least 26.45 lb. (12,000 grams) with digital display, and sensitivity to meet requirements of AASHTO T166 and AASHTO T209. The weighing device shall have a suspension apparatus which meets requirements of AASHTO T166.
   f. * One each—Superpave Gyratory Compactor (SGC) Equipment-A Superpave Gyratory Compactor and appurtenances, including a calibration kit, which meets equipment requirements and testing protocol of a nationally recognized Superpave Center and AASHTO TP 4. The SGC shall be equipped with:
      - A printer to provide a real-time printout of the date and time of compaction, number of gyrations, and specimen height for each gyration during the compaction cycle.
      - At least two mold assemblies

- A specimen extruder

g. *One each—Vacuum pump flasks or bowls, fittings and other accessories as required by AASHTO T209. (A corelok device with related accessories may be substituted if approved by the Department).

h. *One each—Asphalt Ignition Oven which meets requirements of GDT 125 and AASHTO T309.

*Required only for interstate Projects involving mainline traveled way that include pay items under Section 400 or Section 402.

E. Portland Cement Concrete Plant Laboratory Requirements

For Portland cement concrete plants, provide a plant laboratory building and testing and curing equipment meeting the following minimum requirements.

1. **Laboratory Building.** Provide a laboratory building that contains:
   - Combined office/workspace measuring 300 ft² (28 m²)
   - Heating and air conditioning equipment capable of maintaining an interior temperature of 70 °F (21 °C)
   - Separate office space with enough space for a desk and at least two chairs
   - A work table at least 2.5 ft (750 mm) wide, 5 ft (1500 mm) long, and 3 ft (900 mm) high to prepare concrete cylinders for testing
   - An outside work area of at least 10 ft by 10 ft (3 m by 3 m) consisting of a concrete slab constructed level and true, with a light broom finish
2. **Testing and Curing Equipment.** Provide the following testing and curing equipment:
   - Concrete cylinder capping equipment including molds, melting pot with ventilation and accessories, and a sufficient supply of capping compound, all meeting applicable ASTM Specifications.
   - Concrete cylinder compression testing machine with a minimum capacity of 250,000 lbs (1112 kN) that meets applicable ASTM Specifications.
   - Concrete cylinder curing tanks capable of maintaining 200 cylinders at 73 °F ± 3 °F (23 °C ± 1.7 °C) for a 28-day curing period.
   - Concrete cylinder warm water curing tank capable of maintaining 18 cylinders at 95 °F ± 5 °F (35 °C ± 2.8 °C) for a 24-hour curing period.

   Maintain the equipment in good condition and to the Engineer's approval.

152.3.06 Quality Acceptance

The dimensions specified above are minimum requirements. Minor dimensional and detail deviations are not cause for rejection if the Engineer approves of the deviation.

152.3.07 Contractor Warranty and Maintenance

Maintain each building, appurtenance, and sanitary facility as required by this Specification. Furnish electricity, water, and heating as required by this Specification.

Ownership of the building(s) remains with the Contractor. Maintaining and furnishing the buildings(s) after the date of Final Acceptance of the Project is not required.

152.4 Measurement

The actual number of field laboratories furnished according to this Specification is measured separately for each laboratory. There will be no measurement or payment for laboratories furnished at base, asphaltic concrete, or Portland cement concrete central mix plants.

152.4.01 Limits

General Provisions 101 through 150.

152.5 Payment

Each field laboratory measured for payment as described in Subsection 152.4, is paid at the Contract Unit Price bid for each laboratory.

Payment is full compensation for the cost of all foundations, buildings, sheds, platforms, utilities, maintenance, sanitary facilities, removal, razing, heat, electricity, water, and site preparation and cleanup according to this Specification.

Payment for each field laboratory is made in two installments:

Sixty-five percent of the contract price is paid when the Laboratory is ready for occupancy.

Thirty-five percent of the contract price is paid when the Department finishes using the laboratory.

Payment will be made under:

Item No. 152	Field laboratory	Per each

152.5.01 Adjustments

General Provisions 101 through 150.

Section 153—Field Engineer's Office

153.1 General Description

This work includes providing, furnishing, and maintaining field office buildings, when the Contract requires, before beginning construction and according to this Specification. The Contractor shall possess the building while the Department uses it. See Subsection 153.3.07, "Contractor Warranty and Maintenance."

The Engineering personnel will use the building exclusively for as long as they consider necessary, but no longer than the date of Final Acceptance of the Project.

153.1.01 Definitions

General Provisions 101 through 150.

153.1.02 Related References

A. Standard Specifications

Section 636—Highways Signs

Section 643—Fence

Section 910—Sign Fabrication

Section 911—Sign Posts

Section 912—Sign Blanks and Panels

Section 913—Reflectorizing Materials

B. Referenced Documents

NFPA-10A

153.1.03 Submittals

Before installing Project Office signs, submit a signage plan for this work to the Engineer for approval.

153.2 Materials

Ensure that all materials are of commercial grade. Sampling and testing is not required.

153.2.01 Delivery, Storage, and Handling

General Provisions 101 through 150.

153.3 Construction Requirements

153.3.01 Personnel

General Provisions 101 through 150.

153.3.02 Equipment

General Provisions 101 through 150.

153.3.03 Preparation

General Provisions 101 through 150.

153.3.04 Fabrication

Install a sign at the Department of Transportation Project Office in the format shown in Figure 1. This sign shall be plainly visible from the Project roadway. Fabricate and install the sign according to Section 636, Section 910, Section 911, Section 912, and Section 913.

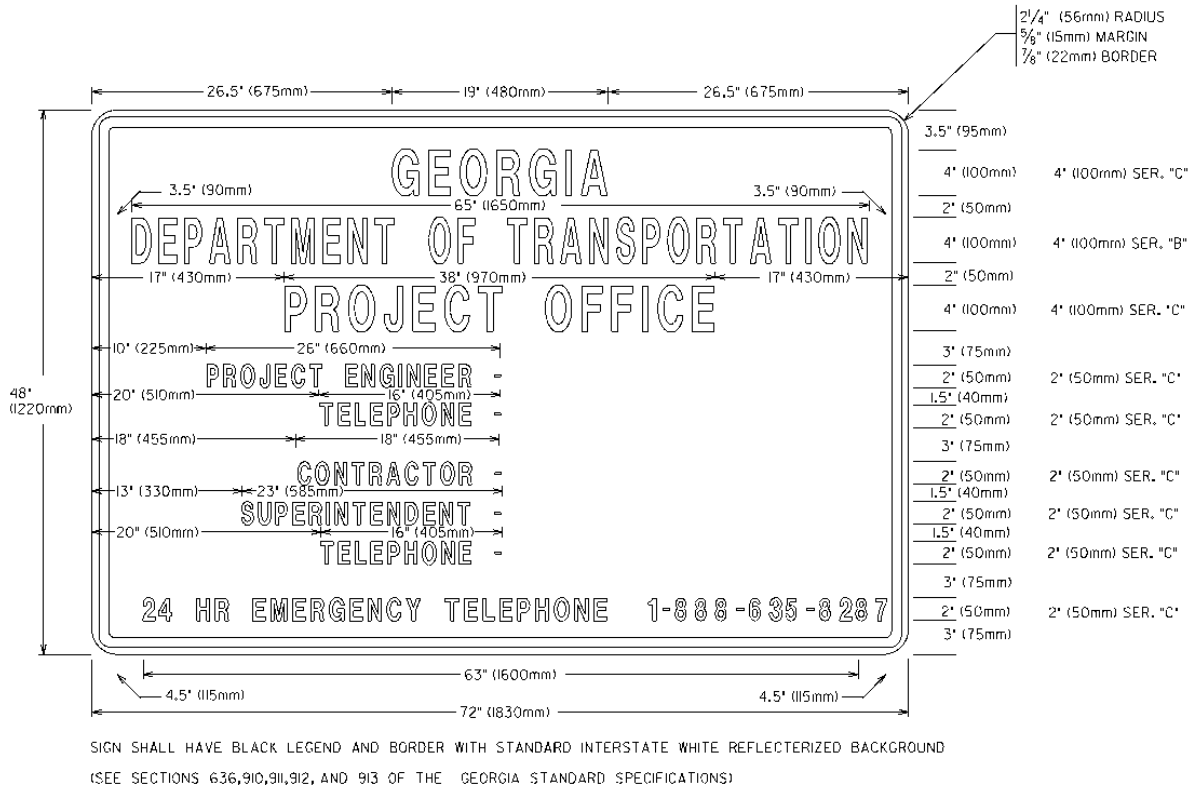

Figure 1

If the Project Office is not located adjacent to the Project roadway, install a second sign on the Project according to these specifications and as directed by the Engineer and enough guide signs to direct the traveling public to the Project Office.

Guide signs shall be 24 in (600 mm) high by 42 in (1050 mm) wide with 4 in (100 mm) high lettering and shall include a directional arrow. The guide sign shall have a white legend with a blue background. Refer to Figures 2 and 3.

Before installing the signs, submit a signage plan to the Engineer for this work.

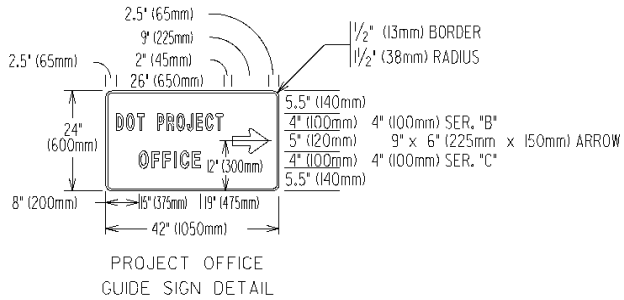

Figure 2

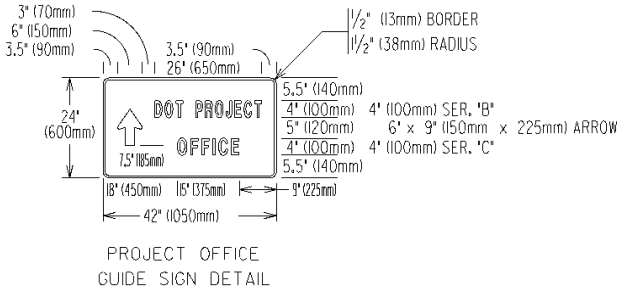

Figure 3

153.3.05 Construction

A. Field Engineer's Office Location

Field office buildings are designated as Type 1or Type 3.

1. **Office Building Type 1:** Place this office within or near the project limits as directed by the Engineer. As the work progresses the offices may be moved to other locations at the Engineer's direction.
2. **Office Building Type 3:** Place this office either within the Project limits or near the Project at the Engineer's direction. When electric current is required, place the building within 1000 ft (300 m) of a power line if possible. If power lines are farther than 1000 ft (300 m) away, payment is made according to Subsection 153.5.

If the office buildings cannot be placed within the Project limits, acquire sites outside the Project limits.

B. Building Requirements

The Field Engineer's office may be a building, house, mobile office, or trailer if it is approved and conforms closely to this Specification. Ensure that the office building meets the following minimum requirements:

1. **Dimensions:** All measurements shown are clear inside dimensions.

	Constructed on Project			Commercially Produced		
	In Linear Feet (Meters)			In Linear Feet (Meters)		
Building	Width	Length	Head-room	Width	Length	Head-room
Type 1	8 (2.44)	10 (3.05)	8 (2.44)	7 ft 6 in (2.29)	9 ft 6 in (2.93)	7 (2.13)
Type 3	12 (3.66)	50 (15.24)	8 (2.44)	11 ft 6 in (3.51)	49 ft 6 in (15.09)	7 (2.13)

2. **Doors and Windows:** Ensure that each building has at least one standard height solid entrance door with a lock and a self-closing screen door. Type 3 buildings shall have at least two doors and screens.

   Each wall, unless predominately occupied by a door, shall have at least one hinged, jalousied, or sliding window that is glazed, screened, and fitted with venetian blinds. Each window shall measure at least 6.5 ft² (0.6 m²), except the window in the toilet area which may be 3.25 ft² (0.3 m^2).

   The window requirements for each office building type include:

   - At least 3 windows for Type 1 buildings.
   - At least 10 windows for Type 3 buildings.

3. **Walls and Roof:** If the building is constructed on the Project, construct the walls and roofs of all building types with studs and rafters measuring 2 in by 4 in (38 mm by 89 mm).

   Include in the walls and ceilings insulating material that is at least 1 1/4 in (32 mm) thick and made of rock wool, fiberglass, or other non-flammable material. Ensure that this material is in all inner wall and ceiling cavities.

a. **Walls:** Cover both sides of the walls with 3/8 in (10 mm) plywood (exterior grade on the outside). No open cracks or knotholes are permitted. Standard wall construction is accepted if the walls are commercially produced.

b. **Roof:** Ensure that the roof is watertight and has a minimum slope of 1:12 in one direction, away from the door. Ensure that the roof's eaves are at least 12 in (300 mm). If the building is commercially produced, an arched roof without eaves is acceptable.

4. **Ceiling:** Cover the ceiling on all building types on the inside of the roof rafters with 3/8 in (10 mm) plywood if constructed on the project. A standard ceiling will be accepted if the building is commercially produced.

5. **Floor:** Ensure that the floor is a minimum of 12 in (300 mm) above the ground on 2 in by 6 in (38 mm by 152 mm) joists. The floor may be timber. No open cracks or knotholes are permitted.

6. **Heater:** Provide an oil fired, gas, or electric heater. But ensure that the heater can maintain an inside minimum temperature of 72 °F (22 °C).

   Properly vent oil and gas units to the outside, provide adequate outside fuel storage, and connect with suitable feed lines.

   Gas units may be connected to a commercial gas main, if available.

7. **Worktable:** Provide a minimum of three (3) standard dimension desks. They shall be provided with a minimum of 1 1/8" (28mm) wood grain laminated tops with 23" (575mm) deep files and heavy-duty steel ball bearing drawers and locking center drawer. Provide one (1) 5' X 3' (1500mmX900mm) adjustable from 0 to 45 degree and 38" (950mm) high drafting table.

8. **Stools:** Provide one (1) posture stool with supportive backrest, waterfall edge seat and instant height lever (26" to 30") (650mm to 750mm). Provide a minimum of five (5) fully braced stackable full 2" (50mm) thick 16"X15" (400mmX375mm) seats with armrests and chrome frames. Provide a minimum of four (4) swivel chairs with arms and a 19"X19" (475mmX475mm) foam cushion and upholstered seat adjustable from 16 ½" to 20" (415mm to 500mm) high.

9. **Miscellaneous Storage Shelves:** Provide 6 linear ft (1800 linear mm) of storage shelves for books, etc. If two 3 ft (900 mm) shelves are furnished, place them at least 1 ft (300 mm) apart vertically. Provide Type 3 buildings with 6 ft (1800 linear mm) of shelves in each end.

10. **Toilet Facilities:** For Type 3 buildings, provide indoor toilet facilities that meet local sanitary codes. Type 1 buildings do not have toilet facilities.

11. **Utilities:** Connect all utilities including water, sewage, gas, electricity, and telephone service to their service source, ready for use, before the Engineer's occupancy. Type 1 buildings do not have utilities. Process and pay the monthly bills for all utility services.

12. **Electric Service:** Provide 120/240 volt electric service that meets code.

13. **Air Conditioner:** For Type 3 buildings, provide an air conditioning unit capable of cooling the building to maintain an inside temperature at least 20 °F (7 °C) cooler than the outside temperature. Type 1 buildings do not have air conditioners.

14. **Fire Extinguisher:** Equip each building with at least one approved fire extinguisher that meets the following requirements:

    - Multipurpose dry chemical type extinguisher
    - Underwriters Laboratory rating 4A-40BC

    Mount the extinguisher(s) in a convenient and conspicuous location that is easily accessible from any part of the building.

    Maintain the extinguisher(s) according to the requirements of NFPA–10A.

15. **Telephone:** Provide in each Type 3 building three telephone lines. Provide two voice lines, with rollover capabilities, connected to two handsets (located on either end of the office). Provide separate telephone line for the computer, as directed by the Engineer. Install and maintain these lines for the life of the Project. Provide telephone access to the Local Area Telephone Service (LATS) only for outgoing, credit card, collect and toll free calls. Ensure that the telephones can receive incoming non-collect long distance calls.

Provide with the telephone, an automatic answering system that can give a greeting message, record incoming messages, and activate remotely.

C. Type 3 Offices

In addition to the requirements in Section B, furnish Type 3 offices with the following:

1. Project Sign—Complete as shown in Subsection 153.3.04, "Fabrication." Install at the Department of Transportation Project Office at a location plainly visible from the Project roadway.
2. Locking File Cabinet—Provide three (3) Four-drawer, letter size, steel, fireproof, lockable, and must have at least two keys.
3. Plan Racks—Capable of holding two complete sets of Project Plans (not more than 100 sheets per hanger).
4. One Enclosed Closet—At least 3 ft by 3 ft (900 mm by 900 mm) with a lockable door and at least two keys.
5. Potable Water and Water Cooler—May be bottled water.
6. Outside Electrical Receptacle—Provide a weather-proof, exterior 220-volt electrical receptacle attached to a power source.
7. Chain Link Fence—Provide a minimum of 500 feet (150m) of 6 ft. (1.8 m) high chain link fence with an extension arm and barbed wire as specified in Section 643. Equip the fence with matching gates and meeting the requirements of Section 643 and consisting of a double 7 ft. (2.1m) by 6 ft. (1.8 m) and a single 4 ft.(1.2 m) by 6 ft. (1.8 m) gate. Include a positive-type locking devices, padlock and a minimum of two keys for each gate. Ensure the fence encompasses the entire compound.
8. Security Light—Provide two 150-watt high-pressure sodium security lights with photoelectric controls. Place as directed by the Engineer.
9. Copying Machine—Furnish the Field Office with one copying machine installed and maintained for the life of the Project. Furnish copying machine having the capability of making letter-size copies (8 ½" x 11"), legal-size copies (8 ½"x 14"), two-sided copies, at least thirty copies per minute, and possess an auto-feed feature. Furnish all consumable and non-consumable supplies for the life of the Project.
10. Place and spread 200 tons (181 Mg) of aggregate surface course on the Office grounds where indicated by the Engineer to facilitate parking. Remove aggregate and grass the area upon completion of the Project.
11. Ensure that the Office is supported with concrete blocks with mortar joints and anchored with ten storm-tie-down anchors. Enclose the area between the ground and the bottom of the Office with a vinyl skirting that matches the Office's siding.
12. Install an alarm system that includes the following items and maintain in good operating condition:
    - SRN-2000 Enforced Bisonic with NAPCO Magnum Alert 850 – control box or Honeywell Vista-10P Master Control Panel with Honeywell 6150RF keypad or equivalent.
    - All doors and windows with wired contacts.
    - Outside sirens with wired contacts.
    - Tamper-proof box with wired contacts.
    - Inside sirens with wired contacts.
    - Two smoke and heat detectors.

    Tie all of the above equipment to a 24 hour control monitoring system (BRK –2812TH or equivalent). Use a wired keyboard system. Do not use a remote system.

    Process and pay the monthly bills for the alarm system and monitoring.
13. Provide one Desktop Computer and Accessories meeting the following minimum requirements:
    a. **Hardware:**
    - Processor – Intel Core i5-2500 3.3GHz or greater
    - Memory 8 GB RAM or larger
    - Hard Drive 250 GB or larger
    - Optical Drive – 16X +-RW

- Video - 128 MB Video memory or greater, VGA, Display Port, and DVI-port
- Monitor – 22 LCD Monitor, Input Signal – VGA (analog), DVI-D and Display Port
- Mouse – USB Optical Scroll Mouse
- Keyboard – USB Standard Keyboard

b. **Software:**

- Operating System -Windows 7 Professional Edition (64 Bit)
- Productivity Suite – Office 2010 Professonal Plus (32 Bit)

c. **Printers:**

HP Officejet Pro 8600 All-in-One Printer, Fax, Scanner, Copier or Dell 968w All-in-One Wireless Printer or approved equal connected so that all functions including fax capability are active. Furnish all consumable and non-consumable supplies for the life of the Project.

d. **Uninterruptible Power Supply:**

American Power Conversion Corporation Back-UPS ES 650 or Newpoint 750 VA Battery Backup or Equal (minimum 5 Receptacles)

e. **DSL or Cable Broadband Internet Service:**

Provide DSL Internet Service with static IP address or provide Cable Broadband Internet Service as directed by the Engineer. If Cable Broadband Internet Service is used, the third telephone line shall be used for the fax mode of the printer.

14. Concrete Cylinder Curing Box—Furnish a Concrete Curing Box for any project that requires the placement of concrete. The curing box and its components shall be constructed of non-corroding materials and shall be capable of storing a minimum of 22 test cylinders, 6 inch x 12 inch (150 mm x 300 mm) stored vertically with the lid closed. Additional capacity may be required on large projects at the direction of the Engineer. The curing box shall be equipped with heating/cooling capabilities, automatic temperature control, and a maximum/minimum (high/low) temperature readout. The curing box shall be capable of meeting the moisture and temperature requirements of AASHTO T 23.

153.3.06 Quality Acceptance

General Provisions 101 through 150.

153.3.07 Contractor Warranty and Maintenance

Whether the building is owned, leased, or rented, the Contractor who provides the building retains possession of each office building.

The Engineer will control the use, location, relocation, and removal of the building. When the building is no longer needed, remove each building from the Project at the Engineer's direction.

Retain possession of all items that are required as part of the Field Office when the Engineer determines that these items are no longer needed.

153.4 Measurement

Field Engineer's offices Types 1and 3, as required by the Engineer, will be paid for per each; provided each was moved to or constructed on the Project according to the Specifications.

153.4.01 Limits

The offices are measured for payment on each project one time only regardless of the number of times they are moved at the Engineer's direction.

153.5 Payment

The use of each office building (Types 1and 3) eligible for payment is paid for at the Contract Unit Price bid. Payment is full compensation for the cost of the location, materials, design, construction, furnishings, maintenance, fuel, water, sewage disposal, electricity, telephone service (when required) , movements within the Project, and movement to and from the Project.

When electric current is required, the cost of necessary transformers is included in the price bid for Type 3 office buildings. Any cost incurred for carrying electric current over 1000 ft (300 m) from a power line is paid for by Force Account.

Payment for each Field Engineer's office is made in two installments:

- 65 percent of the Contract Price is paid when the office is ready for occupancy.
- 35 percent is paid when the Department has finished using the office.

Payment will be made under:

Item No. 153	Field Engineer's office type 1	Per each
Item No. 153	Field Engineer's office type 3	Per each

Section 154—Construction Vibration Monitoring

154.1 General Description

Specifications for this work will be included elsewhere in the Contract.

Section 155—Insect Control

155.1 General Description

The Plant Pest Control Division of the U.S. Department of Agriculture and the Georgia State Department of Agriculture restricts the movement of certain items (see Subsection 155.3.05.A, "Do Not Move Material from an Infested Area") from areas infested with Japanese Beetles or Imported Fire Ants to prevent the spread of these pests to non-infested areas.

155.1.01 Definitions

General Provisions 101 through 150.

155.1.02 Related References

A. Standard Specifications

General Provisions 101 through 150.

B. Referenced Documents

General Provisions 101 through 150.

155.1.03 Submittals

General Provisions 101 through 150.

155.2 Materials

General Provisions 101 through 150.

155.2.01 Delivery, Storage, and Handling

General Provisions 101 through 150.

155.3 Construction Requirements

General Provisions 101 through 150.

155.3.01 Personnel

General Provisions 101 through 150.

155.3.02 Equipment

General Provisions 101 through 150.

155.3.03 Preparation

General Provisions 101 through 150.

155.3.04 Fabrication

General Provisions 101 through 150.

155.3.05 Construction

The project is in an infested area unless noted otherwise.

A. Do Not Move Material from an Infested Area

Do not move the following materials from an infested area into a noninfested area without the approval of the Department of Agriculture Inspector in Charge:

- Soil, mulch, or sod
- Plants with soil attached
- Stump wood or timber with soil attached

If the Plans show limits within which infested materials may be placed, do not haul materials beyond these limits without the Inspector's approval.

B. Clean Earth-Moving Equipment

Clean soil deposits from earth-moving equipment including crawler-type tractors before moving them from an infested area into a noninfested area.

When cleaning equipment, furnish the scraping tools, brooms, water when required, and the labor. Water generally will be required to clean crawler-type tractors.

Have the earth-moving equipment inspected by the Department of Agriculture Inspector in Charge before moving it from the infested area.

C. Notify the Department of Agriculture Inspector in Charge

Notify the Department of Agriculture Inspector in Charge in advance concerning the movement of infested articles or equipment in order to plan the work and prevent operation delays.

Obtain the name, address, and telephone number of the Department of Agriculture Inspector(s) in Charge of the project from:

Georgia State Dept. of Agriculture
Division of Entomology and Pesticides

Agriculture Building
State Capitol
Atlanta, GA
Phone: (404) 656-3641

USDA-APHIS
Plant Protection and Quarantine
1498 Klondike Road- Suite 200
Conyers, GA 30094
Phone: (770)922-9894

155.3.06 Quality Acceptance

General Provisions 101 through 150.

155.3.07 Contractor Warranty and Maintenance

General Provisions 101 through 150.

155.4 Measurement

This item of work is not measured separately for payment.

155.4.01 Limits

General Provisions 101 through 150.

155.5 Payment

This work is not paid for separately.

155.5.01 Adjustments

General Provisions 101 through 150.

Section 157—Survey Aids

157.1 General Description

This work includes constructing, maintaining, and removing (when specified by the Engineer) survey aids required at the locations shown on the Plans or modified Plans, or at locations designated by the Engineer. Survey aids may be required when line and distance control for excavation, embankment, and/or bridges require triangulation.

This work also includes disposing of survey aids, unless the Engineer directs to leave the aids in place.

157.1.01 Definitions

General Provisions 101 through 150.

157.1.02 Related References

A. Standard Specifications

General Provisions 101 through 150.

B. Referenced Documents

TT-E543

TT-529A

157.1.03 Submittals

General Provisions 101 through 150.

157.2 Materials

Comply with the following survey aid requirements:

A. General

The materials used to construct these expendable items do not require pre-inspection or sampling and testing. Replace, repair, or strengthen defective, worn, deteriorated, corroded, or unsatisfactory materials according to Subsection 157.3.07, “Contractor Warranty and Maintenance.”

B. Timber and Piles

Timber and piles may be untreated; however all piles shall be peeled. Timber may be of any commercial grade and species.

For triangulation stations, ensure that the center pile for the instrument mounting has a minimum diameter of 1 ft (300 mm) at a distance of 4 ft (1.2 m) from the butt. The minimum diameter of other piles in the station shall be 10 in (250 mm).

Use piles for survey targets that conform to the requirements of the Specifications. The butt diameter for timber walkway piles shall be at least 8 in (200 mm). Use piles that will maintain safe walkways for the duration of the Project.

C. Plywood

Use marine-type plywood for survey targets that is 0.75 in (19 mm) thick. Paint the plywood with coats that meet the requirements of the Federal Specification noted:

Apply an undercoat to all surfaces and edges (TT-E543); second and third coats—apply to all surfaces and edges (TT-E 529A, color number 27875); fourth and fifth coats—apply to colored areas (TT-529A, color number 21105).

D. Sheet Metal Caps

Use galvanized sheet metal caps for pile heads, galvanized large-headed roofing nails to attach the caps, and galvanized cable to wrap the pile clusters.

E. Other Hardware for Connections

Use bolts, nuts, washers, etc. of any commercial grade. They do not need to be galvanized.

157.2.01 Delivery, Storage, and Handling

General Provisions 101 through 150.

157.3 Construction Requirements

General Provisions 101 through 150.

157.3.01 Personnel

General Provisions 101 through 150.

157.3.02 Equipment

General Provisions 101 through 150.

157.3.03 Preparation

General Provisions 101 through 150.

157.3.04 Fabrication

General Provisions 101 through 150.

157.3.05 Construction

A. Location of Base Lines, Triangulation Stations, and Survey Targets

Possible locations of base lines, triangulation stations, and survey targets are shown on the Plans. Timber walkways are included as a bid item, but their locations may not be shown on the Plans. Actual and final locations of survey aids are based upon Contractors' own procedures and equipment methods.

The Contractor and the Engineer must agree on the most effective means to control the line and distance during construction. At the Preconstruction Conference, discuss with the Subcontractors the plan of operation for reaching this consensus.

After the conference, the Plans will be modified to show the locations of base lines and the number and locations of triangulation stations and survey targets. Timber walkway locations may not be shown on the modified Plans. After receiving the modified plans, make survey aids construction the first operation, including the installation of timber walkways if needed to provide access.

B. Location of Survey Points

After the Contractor constructs survey aids, the Engineer places instrument mountings and performs field checks and office calculations necessary to provide the location of the survey points.

Even though electronic data methods are used to calculate the point locations, the Engineer may not be able to designate survey point locations immediately. Time Charges will not be suspended during this period.

C. Clearing and Grubbing

The Engineer must be satisfied with the method and the location of all clearing and grubbing necessary for survey aid construction as a part of this work. Dispose of removed materials as directed by the Engineer.

D. Framing

Perform all framing and construct survey aids according to the Plan details, unless the Engineer permits alternate details.

E. Triangulation Stations

Drive pile clusters into the underlying firm material to provide instrument mountings. Ensure that these mountings are steady enough to use during wind and wave conditions.

F. Survey Targets

Drive the piling into the firm material to provide and maintain accuracy of the targets under weather and construction conditions specific to the Project area.

G. Timber Walkways

Drive piling deep enough to provide stability under weather and construction conditions specific to the Project area.

Walkways may be required to provide access to triangulation stations, to provide access to boats located at the edge of marsh or swamp areas at low water or low tide periods, or for other purposes as designated on the Plans or by the Engineer.

Alternate designs will be considered if they have equal strength, width, and safety.

H. Height Control

Regardless of elevations stated or implied on the Plans or in the Contract, the Engineer can determine how high to construct the survey aids.

Construct items above the extreme high-tide mark. The Engineer may require triangulation stations used initially for roadway item control to be built higher. These higher stations may be used in bridge control that may be in the initial or subsequent Contracts.

Constructing railing ladders and other vertical means of access are considered incidental to constructing survey aids.

157.3.06 Quality Acceptance

General Provisions 101 through 150.

157.3.07 Contractor Warranty and Maintenance

Maintain the survey aids as follows:

A. Promptly replace, repair, or strengthen defective, unduly worn, corroded, deteriorated, or otherwise unsatisfactory material at the Engineer's request. Such maintenance is incidental to survey aid construction.

B. Maintain survey aids to the Engineer's satisfaction to ensure that they are safe, have longevity, and perform accurately.

C. If a survey aid will be used to control the work under another Contract:

1. Do not remove that aid.
2. Before moving off the Project or before relinquishing maintenance to another Contractor, perform the maintenance required to leave the aid in serviceable use for the future Work. The Engineer must approve of the maintenance. The additional maintenance is considered incidental to survey aid construction.

The subsequent Contractor's maintenance period will conclude when the survey aids no longer are needed for the duration of the Contract. The subsequent Contractor shall maintain the survey aids to the Engineer's satisfaction needed for Work, as provided in Subsection 105.05, "Cooperation by Contractor" as incidental to the work.

When the aids no longer are needed the Engineer will advise the responsible Contractor. The Contractor who used the aids last shall remove and dispose of the material to the Engineer's satisfaction. Removal and disposal is incidental to the work.

157.4 Measurement

This work is measured for payment in the units shown in Subsection 157.5, "Payment," for accepted triangulation stations, survey targets, and timber walkways. Walkway measurements are horizontal and along center lines.

No separate measurements for payment are made to maintain, remove, or dispose of survey aids or to provide material, labor, or equipment required of a subsequent Contractor who does not originally construct the aids. All costs incidental to the work shall be included in other Contract Items.

157.4.01 Limits

General Provisions 101 through 150.

157.5 Payment

This work is paid for at the Contract Price per unit of measurement, complete in place, and when maintained and removed as directed.

These payments are full compensation for costs, direct and indirect, of complying with the requirements of this Specification.

Payment will be made under:

Item No. 157	Triangulation station	Per each
Item No. 157	Survey target	Per each
Item No. 157	Timber walkway	Per linear foot (meter)

157.5.01 Adjustments

General Provisions 101 through 150.

Section 158—Training Program

158.1 General Description

The Contractor's Equal Employment Opportunity Affirmative Action Program includes on-the-job training aimed at fully qualifying trainees in the trade or job classification involved.

The Proposal specifies the number of trainees to be trained under this Specification.

This training specification is in implementation of 23 USC 140(a). As a part of the Contractor's Equal Employment Opportunity Affirmative Action Program, provide training as specified in this specification.

158.1.01 Definitions

General Provisions 101 through 150.

158.1.02 Related References

A. Standard Specifications

General Provisions 101 through 150.

B. Reference Documents

Georgia On-the-Job Training Program Manual

158.1.03 Submittals

Submit an acceptable training program to the Department for review and approval within 30 days after the Notice to Proceed is issued. Failure to submit an acceptable training program, as determined by the Engineer, will result in the withholding of all Contractor progress payments

Specify the starting time for training in each of the classifications.

158.2 Materials

General Provisions 101 through 150.

158.2.01 Delivery, Storage, and Handling

General Provisions 101 through 150.

158.3 Construction Requirements

158.3.01 Personnel

A. Number of Trainees

If the Contract Work is subcontracted, determine how many trainees, if any, the Subcontractor shall train. However, retain the primary responsibility for meeting the training requirements of this Specification. Ensure that this Specification applies to the Subcontract.

Where feasible, have 25 percent of the apprentices or trainees in each occupation be in their first year of apprenticeship or training.

Distribute the number of trainees among the work classifications based on needs and the availability of trainees in each classification (within a reasonable area of recruitment).

B. Types of Trainees in Attendance

1. **Construction Crafts.** Provide training in the construction crafts. Training may also be provided for lower-level management positions if training is oriented toward construction applications such as office engineers, estimators, time-keepers, etc.
2. **Laborers.** Training may be provided in the laborer classification if the training is meaningful and if significance is proven and approved by the Division Office.
3. **Clerks and Secretaries.** Do not provide training for clerk-typists or secretarial-type positions.
4. **Minorities and Women.** Conduct systematic and direct recruitment through public and private sources likely to yield minority and women trainees. Recruit minorities and women within a reasonable area of recruitment.

   Demonstrate the steps taken to recruit minorities and women for training to comply with this Specification. This training commitment is not intended to nor will it be used to discriminate against any applicant for training, whether or not the applicant is a member of a minority group.

158.3.02 Equipment

General Provisions 101 through 150.

158.3.03 Preparation

Give each trainee a copy of the program that is followed during training. Provide each trainee with certification showing the type and length of training satisfactorily completed.

The State will approve of or accept the training program before beginning work on the classification covered by the training program.

158.3.04 Fabrication

General Provisions 101 through 150.

158.3.05 Construction

An employee who completes a training course or is employed as a journeyman cannot receive training in that area of expertise. Satisfy this requirement by including questions in the employee application or by using other means to disclose the trainee's status. Keep records of the findings of each case.

Some off-site training is permissible provided the training is an integral part of an approved training program and does not comprise a significant part of the overall training.

158.3.06 Quality Acceptance

The selected training program approved by the Department and the Federal Highway Administration establishes the minimum length and type of training for each classification. The Department and the Federal Highway Administration will approve a program if it is calculated to meet Equal Employment Opportunity obligations and qualify the average trainee for journeyman status in a classification by the end of the training period.

Acceptable apprenticeship programs include:

Programs registered with U.S. Department of Labor

Programs registered with the Bureau of Apprenticeship and Training

Programs registered with a State apprenticeship agency recognized by the Bureau

Training programs approved but not necessarily sponsored by the U.S. Department of Labor, Manpower Administration, Bureau of Apprenticeship and Training if administered in a manner consistent with the Equal Employment obligations of Federal-Aid highway construction contracts

158.3.07 Contractor Warranty and Maintenance

Maintain and furnish periodic records (form FHWA 1409) that document performance under this Specification.

158.4 Measurement

Except as otherwise noted in Subsection 158.4.01, "Limits," the Contractor will be reimbursed 80 cents for every hour an employee is trained in an approved training program on this Contract. If the number of trainees exceeds the number specified in this Training Specification, reimbursement will be at the Engineer's approval. The Contractor will receive the reimbursement even though additional training program funds are received from other sources (only if the other sources do not specifically prohibit the Contractor from receiving other reimbursement).

The Contractor will be not receive any progress payment under any one of these conditions:

- Failure to provide an acceptable training program to the Department within 30 days after the Notice to Proceed is issued
- The Contractor fails to provide the required training
- The trainee fails to be hired as a journeyman at the fault of the Contractor
- The Contractor fails to show good faith to meet the requirements of this Training Specification

158.4.01 Limits

The Contractor is credited for each trainee that is employed on the Contract Work and that is currently enrolled or becomes enrolled in an approved program. Reimbursement for such trainees is as follows:

1. The Contractor receives reimbursement for off-site training only if trainees are concurrently employed on a Federal-aid project and the Contractor does one or more of the following:
   - Contributes to the cost of the training
   - Provides instruction to the trainee or pays the trainee's wages during the off-site training
2. The Contractor provides acceptable training to the number of trainees specified on the Contract.
3. A trainee begins training on the project as soon as feasible after the work that uses the trained skill has begun.
4. The trainee remains on the project as long as training opportunities exist in the work classification or until the trainee has completed the training program. Trainees do not need to be employed for the entire length of the Contract.
5. Trainees are paid at least 60 percent of the appropriate minimum journeyman's rate specified on the Contract for the first half of the training period, 75 percent for the third quarter of the training period, and 90 percent for the last quarter of the training period.

   If apprentices or trainees in an approved existing program are enrolled as trainees in the same classification on this Project, the appropriate rates approved by the Departments of Labor or Transportation for the existing program shall apply to the trainees.

158.5 Payment

Payment will be made under:

Item No. 158	Training hours	$0.80 per hour

158.5.01 Adjustments

General Provisions 101 through 150.

Section 160—Reclamation of Material Pits and Waste Areas

160.1 General Description

This work includes reclaiming material pits and waste areas by vegetative planting and applies to areas outside of the right-of-way.

The vegetative requirements of this section apply when the Contractor obtains material from a source or wastes material on an area other than within the Right of Way. These requirements apply regardless of how the source or area is obtained. Exceptions to the vegetative requirements of this section include:

- A material source where the Engineer determines not to drain water that accumulates after the material is removed. Only the slopes above water will be planted.
- An area composed of rock or other materials that the Engineer determines are not satisfactory for permanent vegetative cover.
- An area that has been exempted in writing by the Georgia Surface Mined Land Use Board.
- An area where the owner or Contractor, (whichever is designated as the Operator) secures a license from the Surface Mined Land Use Board for surface mining. The Operator will be responsible only to the Surface Mined Land Use Board for reclamation of the affected area.

160.1.01 Definitions

General Provisions 101 through 150.

160.1.02 Related References

A. Standard Specifications

Section 700—Grassing

Section 702—Vine, Shrub and Tree Planting

Section 890—Seed and Sod

B. Referenced Documents

General Provisions 101 through 150.

160.1.03 Submittals

The Engineer must:

- Approve the planting type if the Contractor furnishes a material pit or waste area that requires vegetation under the provisions of this Specification.
- Approve all modified mixtures before planting begins.

The property owner may change the plant material types specified in the Plans to a type not shown in the Planting Table in Subsection 160.2, “Planting Table”, below. If a change is made, the mixture shall cost approximately the same and shall produce an equal amount of protective covering as the mixture contained in this Specification.

160.2 Materials

Materials shall conform to the requirements of Sections 700 and 702 as applicable.

If the Plans or the Proposal do not specify the vegetation type to be planted on State-optioned areas, the Engineer will select the type to be used on each area from the Planting Table.

The State is divided into planting zones as shown on the Planting Zones Map in Sections 700. Consult the Planting Table when planting and follow these points:

- Do not use giant bermuda seed (cynodon species) including NK-37.

- Do not use Italian rye grass seed—perennial or annual.
- Apply the entire combination of seeds specified for each group in the amounts specified. If the property owner does not make a specific choice, use planting groups A, B, C, G, H, or N-1.
- Increase all seed quantities 50 percent on slopes that are too steep for soil preparation and cannot be dug at least 6 in (150 mm) deep.
- Air dry sericea lespedeza seed hay and ensure that it contains mature seed.

Planting Table

	Planting Groups	Species	Rates per Acre/Hectare	Planting Zones			
			lbs. (kg) (except as noted)	Zone 1	Zone 2	Zone 3	Zone 4
Spring Planting	A	Weeping Love Grass	4 (4.5)	3/1-7/15	2/15-7/ 15	2/15-7/ 15	2/1-7/ 15
		Interstate Lespedeza (HS)*	50 (56)	3/1-7/15	2/15-7/ 15	2/15-7/ 15	2/1-7/ 15
	A-1	Interstate Lespedeza (HS)*	60 (67)	3/1-7/15	2/15-7/ 15	2/15-7/ 15	2/1-7/ 15
	B	Tall Fescue	30 (33.5)	3/1-5/1	2/15-5/1		
		Interstate Lespedeza (HS)*	50 (56)	3/1-5/1	2/15-5/1		
	C	Hulled Common Bermuda	10 (11)	3/1 -7/1	2/15-7/1	2/15-7/1	2/1-7/1
		Pensacola Bahia	50 (56)	3/1 -7/1	2/15-7/1	2/15-7/1	2/1-7/1
	D	Hulled Common Bermuda	15 (17)				
		Korean Lespedeza	25 (28)	3/1-3/15	2/15-6/1	2/15-6/ 15	2/1-7/ 15
	D-1	Hulled Common Bermuda	15 (17)				
		Unhulled Common Bermuda	5 (5.5)	3/1-6/1	2/15-6/ 15	2/15-7/1	2/1-7/ 15
		Korean Lespedeza	25 (28)				
	E	Tall Fescue	20 (22.5)				
		White Dutch Clover	6 (6.5)	2/1-4/1	2/1-4/1	1/1-3/1	1/1-3/1
		Korean Lespedeza	20 (22.5)				
	F	Tall Fescue	30 (33.5)				
		Korean Lespedeza	20 (22.5)	2/1-4/1	2/1-4/1	1/1-3/1	1/1-3/1
	F-1	Tall Fescue	50 (56)				
		Korean Lespedeza	20 (22.5)	2/1-6/1	2/1-5/1	1/1-4/1	
	F-2	Tall Fescue	60 (67)	2/1-4/1	2/1-4/1	1/1-3/1	
Summer Planting	G	Hulled Common Bermuda	10 (11)	7/1-9/1	7/1-9/1	7/1-9/1	7/1-9/1
		Pensacola Bahia	50 (56)				

	Planting Groups	Species	Rates per Acre/Hectare	Planting Zones			
			lbs. (kg) (except as noted)	Zone 1	Zone 2	Zone 3	Zone 4
	H	Weeping Love Grass	4 (4.5)	7/1-9/1	7/1-9/1	7/1-9/1	7/1-9/1
		Interstate Lespedeza (HS)	50(56)				
	I	Hulled Common Ber muda	15 (17)	7/1-9/1	7/1-9/1	7/1-9/1	7/1-9/1
		Pensacola Bahia	20 (22.5)				
		Korean Lespedeza	20 (22.5)				
		Reseeding Crimson Clover	30 (33.5)				
	J	Weeping Love Grass	4 (4.5)	7/1-9/1	7/1-9/1	7/1-9/1	7/1-9/1
		Korean Lespedeza	20 (22.5)				
		Reseeding Crimson Clover	20 (22.5)				
	K	Hulled Common Bermuda	5 (5.5)	7/1-9/1	7/1-9/1	7/1-9/1	7/1-9/1
		Pensacola Bahia	20 (22.5)				
		Reseeding Crimson Clover	20 (22.5)				
	L	Tall Fescue	20 (22.5)	7/1-9/1	7/1-9/1	7/1-9/1	7/1-9/1
		Pensacola Bahia	20 (22.5)				
		Korean Lespedeza	20 (22.5)				
		Reseeding Crimson Clover	30 (33.5)				
	M	Weeping Love Grass	5 (5.5)	7/1-9/1	7/1-9/1	7/1-9/1	7/1-9/1
		Tall Fescue	20 (22.5)				
		Korean Lespedeza	20(22.5)				
		Reseeding Crimson Clover	20 (22.5)				
Fall Planting	N	Tall Fescue	30 (33.5)				
		Interstate Lespedeza (HS)*	50 (56)	8/1-11/1	8/15-11/ 1		
	N-1	Tall Fescue	30 (33.5)				
		Interstate Lespedeza (Unscarified)	75 (84)	8/1-3/1	8/15-2/ 15	9/1-2/15	9/15-2/ 1
	O	Tall Fescue	50 (56)	8/1-10/ 15	8/15-11/ 1		
	O-1	Tall Fescue	60 (67)	8/1-10/ 15	8/15-11/ 1	9/1-11/ 15	
	P	Tall Fescue	20 (22.5)				
		Pensacola Bahia	40 (45)	8/1-10/ 15	8/15-11/ 1	9/1-11/ 15	10/1-12/1
	P-1	Tall Fescue	20 (22.5)				
		Pensacola Bahia	60 (67)	8/1-10/	8/15-11/ 1	9/1-11/ 15	10/1-12/1

	Planting Groups	Species	Rates per Acre/Hectare	Planting Zones			
			lbs. (kg) (except as noted)	Zone 1	Zone 2	Zone 3	Zone 4
				15			
	Q	Tall Fescue	40 (45)				
		Korean Lespedeza	20 (22.5)	9/1-11/1	9/15-11/ 15	10/1-12/ 1	10/15-12/15
	Q-1	Tall Fescue	50 (56)				
		Korean Lespedeza	20 (22.5)	8/1-10/ 15	8/15-11/ 1	9/1-11/ 15	
	Q-2	Reseeding Crimson Clover	50 (56)	8/15-11/ 1	8/15-11/ 15	9/1-12/ 15	9/15-12/15
Special Planting	R	Unhulled Common Bermuda	8 (9)				
		Sericea Lespedeza Seed Hay	3 tons (6.7 Mg)	10/1-3/ 15	10/1-3/1		
	S	Pine Seedlings, Native to Georgia @ 6’ x 8’ (1.8 m x 2.4 m) spacing	900 (2224) seedlings	10/15-3/ 15	10/15-3/ 15	11/1-3/1	11/1-3/ 1
	T	Costal Bermuda Sprigs	Omit Over seeding		3/1-9/1	2/15-9/ 15	1/15-12/1

*(HS) = Hulled and Scarified

Note: Sericea Lespedeza or Serala Lespedeza may be substituted for Interstate Lespedeza

160.2.01 Delivery, Storage, and Handling

If the sprigs are stockpiled, cover the sprigs and keep them moist.

160.3 Construction Requirements

160.3.01 Personnel

General Provisions 101 through 150.

160.3.02 Equipment

Equipment shall conform to the requirements of Section 700 and Section 702 as applicable.

160.3.03 Preparation

Seed or sprig areas that are subject to erosion. If the Engineer feels the borrow pit or waste area will be subject to erosion, grass and mulch areas that require pine seedlings before planting the seedlings.

160.3.04 Fabrication

General Provisions 101 through 150.

160.3.05 Construction

Comply with the construction methods in Section 700 for this work with the following exceptions:

A. Prepare the Ground

1. Complete the excavation.
2. Have the Engineer examine the slopes to ensure that planting is not done on areas composed of rock or other materials that the Engineer determines unsatisfactory for permanent vegetation.
3. Plow areas that are to be planted to a depth of 6 in (150 mm) unless the areas are exempted in this Specification or in Section 700.

B. Apply Lime and Fertilizer

1. Spread agricultural lime uniformly at the rate shown on the Plans or determined by the Engineer.
2. Apply fertilizer grade 4-12-12, 6-12-12, or 5-10-15 uniformly at approximately 1,200 lbs/acre (1350 kg/ha).
3. Mix the lime and fertilizer into the top 2 in (50 mm) of soil, including the areas to be planted with pine seedlings.
4. Hydroseed slopes steeper than 2 to 1 as defined in Subsection 700.3.05.F, “Hydroseeding.” The mixing may be eliminated.

C. Seed

Sow seeds at the rates specified in the Subsection 160.2, “Planting Table”.

D. Mulch

1. Use any mulch type listed in Subsection 700.3.05.G, “Mulching.”
2. Mulch all seeded and sprigged areas.

E. Plant Pine Seedlings

1. Use a dibble or other approved planter to dig holes for the pine seedlings after seeding or sprigging and mulching.
2. Set the plants slightly deeper than they were planted in the nursery. When hand planting, compact the bottom of the hole before setting the plants.

F. Apply Nitrogen

1. Apply nitrogen according to Subsection 700.3.05.I, “Application of Nitrogen.”
2. Do not apply nitrogen directly over the seedlings.

G. Harvest Sprigs

1. Observe sprigging seasonal limitations. See Subsection 160.2, “Planting Table”.
2. Inspect harvesting sites. Ensure inspection is according to Subsection 890.2.02.C, “Acceptance.”
3. Harvest sprigs as follows:
   a. Harvest the sprigs using a sod cutter, turning plow, or other approved equipment so that at least 3 in (75 mm) of the root system is lifted intact.
   b. Immediately load the harvested sprigs and cover them with wet burlap or canvas to prevent weather damage.
   c. Transport the sprigs to where they will be immediately planted or stockpiled.
   d. Plant sprigs within 48 hours after they are harvested. Never allow sprigs to dry out or freeze.

H. Apply Sprigs

Apply sprigs using either the broadcast or row method. However, do not perform broadcast sprigging on steep slopes or narrow areas where results will not be satisfactory.

During sprigging, ensure that the soil moisture content is at least the optimum for soil sprigging.

1. Broadcast Sprigging

   Perform broadcast sprigging as follows:

   a. Apply the sprigs mechanically or by hand in a uniform layer over the prepared surface placing at least 4 viable sprigs to each square foot (43 viable sprigs to each square meter).
   b. Place the sprigs 2 to 3 in (50 to 75 mm) deep by disc harrowing or by other satisfactory means.

2. Row Sprigging

   Perform row sprigging as follows:

   a. Open furrows spaced at least 1 ft (300 mm) apart to at least 4 in (100 mm) deep.
   b. Immediately place the sprigs in the furrows by hand or by planting machines and overlap them in the furrows.
   c. Do not expose sprigs more than 15 minutes before filling in the furrows.

I. Restore Line and Grade, and Roll

After the sprigging is done, do the following:

1. Return the impaired sections back to the line and grade as established by the Engineer.
2. Roll the area at right angles to the direction of the slope incline.

J. Mulch Sprigged Areas

Mulch sprigged areas within the construction limits according to Subsection 700.3.05.G, “Mulching.”

1. Mulch with Binder

   When applying mulch with binder, apply immediately after the overseeding and rolling are complete.

2. Mixed-in-Place Mulch

   When applying mixed-in-place mulch, apply immediately after sprigging.

160.3.06 Quality Acceptance

Before Final Acceptance, each planted area shall meet the requirements for satisfactory growth and development as defined in Subsection 160.5.01.A, “Plant Establishment.” Except as otherwise specified in this Specification, all seeding shall conform to Section 700, and pine seedling planting shall conform to Section 702.

160.3.07 Contractor Warranty and Maintenance

General Provisions 101 through 150.

160.4 Measurement

The following will be measured in acres (hectares) horizontal measurement:

- Area reclamation—seeding or sprigging
- Area reclamation—pine seedlings including fertilizer and mulch

Reclamation items that are completed, accepted, and eligible for measurement and payment are subject to the following conditions:

- Each work item shall be done for the Department according to the Specifications and terms of the Contract.
- Areas where the work is done shall be shown on the Plans as possible sources of materials or waste areas.
- If the Contractor furnishes a substitute area, measurement of reclamation terms eligible for payment shall not exceed Plan quantities.

160.4.01 Limits

Some reclamation items are not eligible for measurement and payment by the Department. These include but are not limited to:

Items performed for or paid for by another agency

Items performed on areas, other than substitute areas, secured by the Contractor but not shown on the Plans

Items performed on any area excluded under Subsection 160.1, “General Description.”

160.5 Payment

Items of area reclamation will be paid for if complete in place and accepted.

The following will be paid for at the Contract Unit Price per acre (hectare):

- Area reclamation—seeding or sprigging
- Area reclamation—pine seedlings measured for payment

Payment shall be full compensation for:

- Preparing the ground
- Seeding or planting
- Applying fertilizer, including nitrogen
- Watering
- Mulching
- Providing other work and incidentals necessary to complete the Item except lime, which will be measured and paid for according to Section 700.

The Contractor will be allowed full measurement and payment on his regular monthly estimates for all reclamation items at the time they are first completed, provided the work has been done in strict compliance with the Specifications.

Payment will be made under:

Item No. 160	Area reclamation, seeding	Per acre (hectare)
Item No. 160	Area reclamation, sprigging	Per acre (hectare)
Item No. 160	Area reclamation, pine seedlings	Per acre (hectare)
Item No. 700	Agricultural lime	Per ton (megagram)

160.5.01 Adjustments

A. Plant Establishment

Perform plant establishment according to Subsection 700.3.07.A, “Plant Establishment” except that mowing is not required.

B. Pine Tree Seedlings

The area covered with pine tree seedlings will not be considered satisfactory until 85 percent or more of the growth has survived 90 days after planting with no fail spots exceeding 0.25 acre (0.1 ha).

If the survival rate is less than 85 percent, but greater than 75 percent, and fail spots do not exceed 0.25 acre (0.1 ha), the affected area will be measured for payment at half the Contract price unless the Contractor replants the deficient area to meet the requirements for full growth and coverage.

Areas that do not meet the minimum 75 percent requirement shall be replanted in full at the Contractor’s expense. All replanting shall be done within the allowable planting season for pine seedlings as shown in Subsection 160.2, “Planting Table”.

Section 161—Control of Soil Erosion and Sedimentation

161.1 General Description

Specifications for this work will be included elsewhere in the Contract.

Section 162—Erosion Control Check Dams

162.1 General Description

This work includes furnishing, constructing, and maintaining erosion control check dams.

162.1.01 Definitions

General Provisions 101 through 150.

162.1.02 Related References

A. Standard Specifications

Section 810—Roadway Materials

B. Referenced Documents

General Provisions 101 through 150.

162.1.03 Submittals

General Provisions 101 through 150.

162.2 Materials

A. Erosion Control Materials

Use these materials as needed to control erosion on check dams:

1. Where required, use any commercial type of woven wire minimum 14 ½ gauge.
2. Obtain other materials such as logs, brush, stakes, etc., from the Right-of-Way where available.
3. Place Number 57 stone, where required, at the location and depth indicated on the Plans.
4. Ensure that material in the earth dams meets the requirements of Subsection 810.2.01.A.1, "Classes" for Class II soils.

162.2.01 Delivery, Storage, and Handling

General Provisions 101 through 150.

162.3 Construction Requirements

162.3.01 Personnel

General Provisions 101 through 150.

162.3.02 Equipment

General Provisions 101 through 150.

162.3.03 Preparation

General Provisions 101 through 150.

162.3.04 Fabrication

General Provisions 101 through 150.

162.3.05 Construction

A. Check Dam Construction

Construct check dams as follows:

1. Construct check dams before roadway clearing, grubbing, or grading is done in the affected drainage area. Construct according to the Plans.
2. Remove the trees, logs, brush, etc., within the Right-of-Way and the affected area that may be used to construct the check dams. Do not disturb other natural ground cover.

NOTE: Use only rubber-tired equipment to work in the affected drainage area until after the check dam is in place and completed.

3. Obtain the embankment material for the earth dams from outside the area draining into the protected pond or stream.
4. Immediately after completing the earthwork on the earth dams, place a layer of Number 57 stone on the downstream side of the dam. Immediately grass the remaining portions (top and upstream slopes) of the earth dams.
5. Immediately after grading, grass or stabilize with straw mulch roadway cut and fill slopes that drain toward the check dam drainage area.
6. Leave check dams in place after construction is complete unless otherwise directed by the Engineer.

162.3.06 Quality Acceptance

General Provisions 101 through 150.

162.3.07 Contractor Warranty and Maintenance

Repair the check dams as needed during the life of the Contract.

The estimated number of check dams required is shown on the Plans. Additional check dams may be necessary and shall be constructed when directed by the Engineer.

162.4 Measurement

The number of erosion control check dams measured for the payment is the actual number completed and accepted.

162.4.01 Limits

General Provisions 101 through 150.

162.5 Payment

Erosion control check dams, as measured in Subsection 162.4, “Measurement,” are paid for at the Contract Unit Price. Payment is full compensation for:

- Earth dam construction and compaction
- Required grassing, mulching, and Number 57 stone
- Log dams and dissipaters
- Removal if ordered by the Engineer

Payment for this Item is made as follows:

- 75 percent of the Contract Price is paid when each erosion control check dam is complete in place.
- 25 percent is paid when the Engineer instructs the Contractor that the check dam is no longer required but will remain in place or be removed, whichever applies.

NOTE: Temporary devices will be left in place at the Engineer's discretion without a change in cost.

Payment will be made under:

Item No. 162	Erosion control check dam—type__	Per each

162.5.01 Adjustments

General Provisions 101 through 150.

Section 163—Miscellaneous Erosion Control Items

163.1 General Description

This work includes constructing and removing:

- Silt control gates
- Temporary erosion control slope drains shown on the Plans or as directed
- Sediment basins
- Baled straw sediment barrier and check dams
- Rock filter dams
- Stone filter berms
- Stone filter rings
- Other temporary erosion control structures shown on the Plans or directed by the Engineer

This work also includes applying mulch (straw or hay, erosion control compost), and temporary grass.

163.1.01 Related References

A. Standard Specifications

Section 109—Measurement and Payment

Section 161—Control of Soil Erosion and Sedimentation

Section 171—Temporary Silt Fence

Section 500—Concrete Structures

Section 603—Rip Rap

Section 700—Grassing

Section 715—Bituminous Treated Roving

Section 720 – Triangular Silt Barrier

Section 800—Coarse Aggregate

Section 801—Fabrics

Section 822—Emulsified Asphalt

Section 860—Lumber and Timber

Section 863—Preservative Treatment of Timber Products

Section 890—Seed and Sod

Section 893—Miscellaneous Planting Materials

B. Referenced Documents

AASHTO M252

AASHTO M294

163.1.02 Submittals

Provide written documentation to the Engineer as to the average weight of the bales of mulch.

163.2 Materials

Provide materials shown on the Plans, such as pipe, spillways, wood baffles, and other accessories including an anti-seep collar, when necessary. The materials shall remain the Contractor's property after removal, unless otherwise shown on the Plans.

Materials may be new or used; however, the Engineer shall approve previously used materials before use.

Materials shall meet the requirements of the following Specifications:

Material	Section
Mulch	893.2.02
Temporary Silt Fence	171
Concrete Aprons and Footings shall be Class A	500
Rip Rap	603
Temporary Grass	700
Bituminous Treated Roving	715
Triangular Silt Barrier	720
Lumber and Timber	860.2.01
Preservative Treatment of Timber Products	863.1
Corrugated Polyethylene Temporary Slope Drain Pipe	AASHTO M252 or M294

163.2.01 Delivery, Storage, and Handling

General Provisions 101 through 150.

163.3 Construction Requirements

163.3.01 Personnel

General Provisions 101 through 150.

163.3.02 Equipment

General Provisions 101 through 150.

163.3.03 Preparation

General Provisions 101 through 150.

163.3.04 Fabrication

General Provisions 101 through 150.

163.3.05 Construction

A. Silt Control Gates

If silt control gates are required or are directed by the Engineer, follow these guidelines to construct them:

1. Clear and grade only that portion of the roadway within the affected drainage area where the drainage structure will be constructed.
2. Construct or install the drainage structure and backfill as required for stability.
3. Install the silt control gate at the inlet of the structure. Use the type indicated on the Plans.
4. Vary the height of the gate as required or as shown on the Plans.
5. Finish grading the roadway in the affected drainage area. Grass and mulch slopes and ditches that will not be paved. Construct the ditch paving required in the affected area.
6. Keep the gate in place until the work in the affected drainage area is complete and the erodible area is stabilized.
7. Remove the Type 1 silt gate assembly by sawing off the wood posts flush with the concrete apron. Leave the concrete apron between the gate and the structure inlet in place. The gate shall remain the property of the Contractor.

B. Temporary Slope Drains

If temporary slope drains are required, conduct the roadway grading operation according to Section 161 and follow these guidelines:

1. Place temporary pipe slope drains with inlets and velocity dissipaters (straw bales, silt fence, or aprons) according to the Plans.
2. Securely anchor the inlet into the slope to provide a watertight connection to the earth berm. Ensure that all connections in the pipe are leak proof.
3. Place temporary slope drains at a spacing of 350 ft (105 m) maximum on a 0% to 2% grade and at a spacing of 200 ft (60m) maximum on steeper grades, or more frequently as directed by the Engineer. Keep the slope drains in place until the permanent grass has grown enough to control erosion.
4. Remove the slope drains and grass the disturbed area with permanent grass. However, the temporary slope drains may remain in place to help establish permanent grass if approved by the Engineer.

C. Sediment Basins

Construct sediment basins according to the Plans at the required location, or as modified by the Engineer.

1. Construct the unit complete as shown, including:
   - Grading
   - Drainage
   - Rip rap
   - Spillways
   - Anti-seep collar
   - Temporary mulching and grassing on internal and external slopes
   - Accessories to complete the basin
2. When the sediment basin is no longer needed, remove and dispose of the remaining sediment.
3. Remove the sediment basin. Grade to drain and restore the area to blend with the adjacent landscape.
4. Mulch and permanently grass the disturbed areas according to Section 700.

D. Sediment Barrier (baled straw)

Construct sediment barrier (baled straw) according to the Plan details. Use rectangular, standard size baled straw in mechanically produced bales.

The following items may be substituted for sediment barrier (baled straw)

1. Type B Silt Fence.
2. Triangular Silt Barrier.

3. Synthetic Fiber: Use synthetic fiber bales of circular cross section at least 18 in (450 mm) in diameter. Use synthetic bales of 3 ft or 6 ft (0.9 m or 1.8 m) in length that are capable of being linked together to form a continuous roll of the desired total length. Use bales that are enclosed in a geotextile fabric and that contain a pre-made stake hole for anchoring.
4. Coir: Use coir fiber bales of circular cross section at least 16" (400mm) in diameter. Use coir bales of 10 ft, 15 ft, or 20 ft (3 m, 4.5 m, or 6 m) in length. Use coir baled with coir twine netting with 2 in X 2 in (50 mm X 50 mm) openings. Use coir bales with a dry density of at least 7 lb/ft^3 (112 kg/m^3). Anchor in place with 2 in X 4 in (50 mm X 100 mm) wooden wedges with a 6 in (150 mm) nail at the top. Place wedges no more than 36 in (900 mm) apart.
5. Excelsior: Use curled aspen excelsior fiber with barbed edges in circular bales of at least 18 in (450 mm) in diameter and nominally 10 ft (3 m) in length. Use excelsior baled with polyester netting with 1 in X 1 in (25 mm by 25 mm) triangular openings. Use excelsior bales with a dry density of at least 1.4 lb/ft^3 (22 kg/m^3). Anchor in place with 1 in (25 mm) diameter wooden stakes driven through the netting at intervals of no more than 2 ft (600 mm).
6. Compost Filter Sock: Use general use compost (see Subsection 893.2.02.A.5.b) in circular bales at least 18 in diameter. Use compost baled with photo-degradable plastic mesh 3 mils thick with a maximum 0.25 in X 0.25 in (6 mm X 6 mm) openings. Anchor in place with 1 in (25 mm) diameter wooden stakes driven through the netting at intervals of no more than 2 ft (600 mm). The sock shall be dispersed on site when no longer required, as determined by the Engineer. Do not use Compost Filter Socks in areas where the use of fertilizer is restricted.
7. Compost Filter Berm: Use erosion control compost (see Subsection 893.2.02) to construct an uncompacted 1.5 ft to 2 ft (450 mm to 600 mm) high trapezoidal berm which is approximately 2 ft to 3 ft (600 mm to 1 m) wide at the top and minimum 4 ft (1.2 m) wide at the base. Do not use Compost Filter Berms in areas where the use of fertilizer is restricted.

   The construction of the compost filter berm includes the following:

   a. Keeping the berm in a functional condition.
   b. Installing additional berm material when necessary.
   c. Removing the berm when no longer required, as determined by the Engineer. At the Engineer's discretion, berm material may be left to decompose naturally, or distributed over the adjacent area.

E. Other Temporary Structures

When special conditions occur during the design stage, the Plans may show other temporary structures for erosion control with required materials and construction methods.

F. Temporary Grass

Use a quick growing species of temporary grass such as rye grass, millet, or a cereal grass suitable to the area and season.

Use temporary grass in the following situations:

- When required by the Specifications or directed by the Engineer to control erosion where permanent grassing cannot be planted.
- To protect an area for longer than mulch is expected to last (60 calendar days).

Plant temporary grass as follows:

1. Use seeds that conform to Subsection 890.2.01, "Seed." Perform seeding according to Section 700; except use the minimum ground preparation necessary to provide a seed bed if further grading is required.
2. Prepare areas that require no further grading according to Subsection 700.3.05.A, "Ground Preparation." Omit the lime unless the area will be planted with permanent grass without further grading. In this case, apply the lime according to Section 700.
3. Apply mixed grade fertilizer at 400 lbs/acre (450 kg/ha). Omit the nitrogen. Mulch (with straw or hay) temporary grass according to Section 700. (Erosion control compost Mulch will not be allowed with grassing.)
4. Before planting permanent grass, thoroughly plow and prepare areas where temporary grass has been planted according to Subsection 700.3.05.A, "Ground Preparation".
5. Apply Polyacrylamide (PAM) to all areas that receive temporary grassing.

6. Apply Pam (powder) before grassing or PAM (emulsion) to the hydroseeding operation.
7. Apply PAM according to manufacturer specifications.
8. Use only anionic PAM.

For projects that consist of shoulder reconstruction and/or shoulder widening, refer to Section 161.3.05H for Wood Fiber Blanket requirements.

G. Mulch

When stage construction or other conditions prevent completing a roadway section continuously, apply mulch (straw or hay or erosion control compost) to control erosion. Mulch may be used without temporary grassing for 60 calendar days or less. Areas stabilized with only mulch (straw/hay) shall be planted with temporary grass after 60 calendar days.

Apply mulch as follows:

1. Mulch (Hay or Straw) - Without Grass Seed
   a. Uniformly spread the mulch over the designated areas from 2 in to 4 in (50 mm to 100 mm) thick.
   b. After spreading the mulch, walk in the mulch by using a tracked vehicle (preferred method), empty sheep foot roller, light disking, or other means that preserves the finished cross section of the prepared areas. The Engineer will approve of the method.
   c. Place temporary mulch on slopes as steep as 2:1 by using a tracked vehicle to imbed the mulch into the slope.
   d. When grassing operations begin, leave the mulch in place and plow the mulch into the soil during seed bed preparation. The mulch will become beneficial plant food for the newly planted grass.
2. Erosion control compost - Without Grass Seed
   a. Uniformly spread the mulch (erosion control compost) over the designated areas 2 in (50 mm) thick.
   b. When rolling is necessary, or directed by the Engineer, use a light corrugated drum roller.
   c. When grassing operations begin, leave the mulch in place and plow the mulch into the soil during seed bed preparation. The mulch will become beneficial plant food for the newly planted grass.
   d. Plant temporary grass on area stabilized with mulch (erosion control compost) after 60 calendar days.
   e. Do not use Erosion Control Compost in areas where the use of fertilizer is restricted.

H. Miscellaneous Erosion Control Not Shown on the Plans

When conditions develop during construction that were unforeseen in the design stage, the Engineer may direct the Contractor to construct temporary devices such as but not limited to:

- Bulkheads
- Sump holes
- Half round pipe for use as ditch liners
- U-V resistant plastic sheets to cover critical cut slopes

The Engineer and the Contractor will determine the placement to ensure erosion control in the affected area.

I. Diversion Channels

When constructing a culvert or other drainage structure in a live stream that requires diverting a stream, construct a diversion channel.

J. Temporary Check Dams

Temporary check dams are constructed of the following materials;

- Stone plain rip rap according to Section 603 or of sand bags as in Section 603 without Portland cement. (Place plastic filter fabric on ditch section before placing rip rap.)
- Fabric (Type C silt fence)

- Hay Bales

Temporary check dams shall be constructed according to plan details and shall remain in place until the permanent ditch protection is in place or being installed and the removal is approved by the Engineer.

K. Construction Exits

Locate construction exits at any point where vehicles will be leaving the project onto a public roadway. Install construction exits at the locations shown in the plans and in accordance with plan details.

L. Retrofit

Add the retrofit device to the permanent outlet structure as shown on the Plan details.

When all land disturbing activities that would contribute sediment-laden runoff to the basin are complete, clean the basin of sediment and stabilize the basin area with vegetation.

When the basin is stabilized, remove the retrofit device from the permanent outlet structure of the detention pond.

M. Inlet Sediment Trap

Inlet sediment traps consist of a temporary device placed around a storm drain inlet to trap sediment. An excavated area adjacent to the sediment trap will provide additional sediment storage.

Inlet sediment traps may be constructed of Type C silt fence, plastic frame and filter, hay bales, baffle box, or other filtering materials approved by the Engineer.

Construct inlet sediment traps according to the appropriate specification for the material selected for the trap.

Place inlet sediment traps as shown on the Plans or as directed by the Engineer.

N. Rock Filter Dams

Construct rock filter dams of the material selected as shown in the approved erosion and sediment control plan. Construct and place this item in accordance with the approved erosion control construction detail(s) and Standard Specification Section 603.

Rock filter dams shall remain in place until the permanent ditch protection is in place or is being installed and their removal is approved by the Engineer.

O. Stone Filter Berms

Construct stone filter berms of the material selected as shown in the approved erosion and sediment control plan. Construct and place this item in accordance with the approved erosion control construction detail(s) and Standard Specification Section 603.

Stone filter berms shall remain in place until the permanent slope protection is in place or is being installed and their removal is approved by the Engineer.

P. Stone Filter Rings

Construct stone filter rings of the material selected as shown in the approved erosion and sediment control plan. Construct and place this item in accordance with the approved erosion control construction detail(s) and Standard Specification Section 603.

A stone filter ring shall remain in place until final stabilization of the area which drains toward it is achieved and its removal is approved by the Engineer.

163.3.06 Quality Acceptance

General Provisions 101 through 150.

163.3.07 Contractor Warranty and Maintenance

General Provisions 101 through 150.

163.4 Measurement

A. Silt Control Gates

Silt control gates are measured for payment by the entire structure constructed at each location complete in place and accepted. Silt control gates constructed at the inlet of multiple lines of drainage structures are measured for payment as a single unit.

B. Temporary Slope Drains

Temporary slope drains are measured for payment by the linear foot (meter) of pipe placed. When required, the inlet spillway and outlet apron and/or other dissipation devices are incidental and not measured separately.

C. Sediment Basins

Sediment basins are measured for payment by the entire structure complete, including construction, maintenance, and removal. Measurement also includes:

- Earthwork
- Drainage
- Spillways
- Baffles
- Rip rap
- Final cleaning to remove the basin

Permanent and temporary grassing for sediment basins is measured separately for payment.

D. Diversion Channels

Diversion channels are not measured for payment. Costs for the entire structure complete, including materials, construction (including earthwork), and removal is included in the price bid for the drainage structure or for other Contract items.

E. Temporary Grass

Temporary grass is measured for payment by the acre (hectare). Lime, when required, is measured by the ton (megagram). Mulch and fertilizer are measured separately for payment.

F. Mulch

Mulch (straw or hay, or erosion control compost) is measured for payment by the ton (megagram).

G. Baled Straw Sediment Barrier, Baled Straw Check Dam and Fabric Check Dams

Baled straw sediment barrier, baled straw check dams, and fabric check dams are measured by the linear foot (meter). When the Contractor substitutes a product allowed in Subsection 163.3.05.D for baled straw sediment barrier or when the Engineer directs this substitution, the product will be measured by the linear foot (meter).

H. Rip Rap Check Dams

Rip Rap Check Dams are measured per each which will include all work necessary to construct the check dam including plastic filter fabric placed beneath the rip rap or sand bags.

I. Construction Exits

Construction exits are measured per each which will include all work necessary to construct the exit including the required geotextile fabric placed beneath the aggregate.

J. Retrofit

Retrofit will be measured for payment per each. The construction of the detention pond and permanent outlet structure will be measured separately under the appropriate items.

K. Inlet Sediment Trap

Inlet sediment traps, regardless of the material selected, are measured per each which includes all work necessary to construct the trap including any incidentals and providing the excavated area for sediment storage.

L. Rock Filter Dams

Rock filter dams are measured for payment per each required. This includes the entire structure at each location and all the work necessary for construction.

M. Stone Filter Berms

Stone filter berms are measured for payment per each required. This includes the entire structure at each location and all the work necessary for construction.

N. Stone Filter Rings

Stone filter rings are measured for payment per each required. This includes the entire structure at each location and all the work necessary for construction.

163.4.01 Limits

General Provisions 101 through 150.

163.5 Payment

A. Silt Control Gates

The specified silt control gates are paid for at the Contract Unit Price per each. Payment is full compensation for:

- Furnishing the material and labor
- Constructing the concrete apron as shown on the Plans
- Excavating and backfilling to place the apron
- Removing the gate

B. Temporary Slope Drains

Temporary slope drains are paid for by the linear foot (meter). Payment is full compensation for materials, construction, removal (if required), inlet spillways, velocity dissipaters, and outlet aprons.

When temporary drain inlets and pipe slope drains are removed, they remain the Contractor’s property and may be reused or removed from the Project as the Contractor desires. Reused pipe or inlets are paid for the same as new pipe or inlets.

C. Sediment Basin

Sediment basins, measured according to Subsection 163.4,C "Measurement," are paid for by the unit, per each, for the type specified on the Plans. Price and payment are full compensation for work and supervision to construct, and remove the sediment basin, including final clean-up.

D. Diversion Channel

Diversion channels are not paid for separately; they are included in the price bid for the drainage structure or for other Contract Items.

E. Temporary Grass

Temporary grass is paid for by the acre (hectare). Payment is full compensation for all equipment, labor, ground preparation, materials, wood fiber mulch, polyacrylamide, and other incidentals. Lime (when required) is paid for by the ton (megagram). Mulch and fertilizer are paid for separately.

F. Mulch

Mulch is paid for by the ton. Payment is full compensation for all materials, labor, maintenance, equipment and other incidentals.

The weight for payment of straw or hay mulch will be the product of the number of bales used and the average weight per bale as determined on certified scales provided by the contractor or state certified scales. Provide written documentation to the Engineer stating the average weight of the bales.

The weight of erosion control compost mulch will be determined by weighing each loaded vehicle on the required motor truck scale as the material is hauled to the roadway, or by using recorded weights if a digital recording device is used. The contractor may propose other methods of providing the weight of the mulch to Engineer for approval.

G. Baled Straw Sediment barrier, Baled Straw Check Dams and Fabric Check Dams (Type C Silt Fence)

Baled straw sediment barrier, baled straw check dams and fabric check dams (type C silt fence), complete in place and accepted are paid for at the Contract Unit Price bid per linear foot (meter). Payment is full compensation for constructing, and removing (when directed) the baled straw sediment barrier or either check dam.

When the Contractor substitutes any product allowed in Subsection 163.3.05.D for baled straw sediment barrier or when the Engineer directs this substitution, payment is made at the bid price per linear foot (meter) for baled straw sediment barrier.

H. Rip Rap Check Dams

Rip Rap Check Dams are paid for per each. Payment is full compensation for all materials, construction, and removal. Reused stone plain rip rap or sandbags are paid for on the same basis as new items. Filter fabric required under rip rap check dams is included in the price bid for each check dam.

I. Construction Exits

Construction exits are paid for per each. Payment is full compensation for all materials including the required geotextile, construction, and removal.

J. Retrofit

This item is paid for at the Contract Unit Price per each. Payment is full compensation for all work, supervision, materials (including the stone filter), labor and equipment necessary to construct and remove the retrofit device from an existing or proposed detention pond outlet structure.

K. Inlet Sediment Trap

Inlet sediment traps are paid for per each. Payment is full compensation for all materials, construction, and removal

L. Rock Filter Dams

Rock filter dams are paid for per each. Payment is full compensation for all materials, construction, and removal for each. Clean reused stone Type 3 riprap and #57 stone are paid for on the same basis as new items. Plastic woven filter fabric is required under rock filter dams and is included in the price bid for each.

M. Stone Filter Berms

Stone filter berms are paid for per each. Payment is full compensation for all materials, construction, and removal for each. Clean reused stone Type 3 riprap and #57 stone are paid for on the same basis as new items. Plastic woven filter fabric is required under rock filter berms and is included in the price bid for each.

N. Stone Filter Rings

Stone filter rings are paid for per each. Payment is full compensation for all materials, construction, and removal for each. Clean reused stone Type 3 riprap and #57 stone are paid for on the same basis as new items. Plastic woven filter fabric is required under stone filter rings and is included in the price bid for each.

The Items in this Section (except temporary grass and mulch) are made as partial payments as follows:

- When the item is installed and put into operation the Contractor will be paid 75 percent of the Contract price.
- When the Engineer instructs the Contractor that the Item is no longer required and is to remain in place or is removed, whichever applies, the remaining 25 percent will be paid.

Temporary devices may be left in place at the Engineer's discretion at no change in cost. Payment for temporary grass will be made based on the number of acres (hectares) grassed. Mulch will be based on the number of tons (megagrams) used.

Payment is made under:

Item No. 163	Construct and remove silt control gate, type__	Per each
Item No. 163	Construct and remove temporary pipe slope drains	Per linear foot (meter)
Item No. 163	Construct and remove temporary sediment barrier or baled straw check dam	Per linear foot (meter)
Item No. 163	Construct and remove sediment basin type__, Sta. No.___	Per each
Item No. 163	Construct and remove Fabric Check Dam - type C silt fence	Per linear foot (meter)
Item No. 163	Construct and remove Rip Rap Check Dams ,Stone Plain Rip Rap/Sand Bags	Per Each
Item No. 163	Construction exit	Per each
Item No. 163	Construct and remove retrofit, Sta. No.____	Per each
Item No. 163	Construct and remove rock filter dam	Per each
Item No. 163	Construct and remove stone filter berm	Per linear foot (meter)
Item No. 163	Construct and remove stone filter ring	Per each
Item No. 163	Construct and remove inlet sediment trap	Per each
Item No. 163	Temporary grass	Per acre (hectare)
Item No. 163	Mulch	Per ton (megagram)

163.5.01 Adjustments

General Provisions 101 through 150.

Section 165—Maintenance of Temporary Erosion and Sedimentation Control Devices

165.1 General Description

This work consists of providing maintenance on temporary erosion and sediment control devices, including but not limited to the following:

- Silt fence
- Sediment basins
- Silt control gates
- Check dams
- Silt retention barriers
- Rock filter dams
- Stone filter berms
- Stone filter rings

It also consists of removing sediment that has accumulated at the temporary erosion and sediment control devices.

165.1.01 Definitions

General Provisions 101 through 150.

165.1.02 Related References

A. Standard Specifications

General Provisions 101 through 150.

B. Referenced Documents

General Provisions 101 through 150.

165.1.03 Submittals

General Provisions 101 through 150

165.2 Materials

General Provisions 101 through 150.

165.2.01 Delivery, Storage, and Handling

General Provisions 101 through 150.

165.3 Construction Requirements

165.3.01 Personnel

General Provisions 101 through 150.

165.3.02 Equipment

General Provisions 101 through 150.

165.3.03 Preparation

General Provisions 101 through 150.

165.3.04 Fabrication

General Provisions 101 through 150.

165.3.05 Construction

A. General

As a minimum, clean the sediment from all temporary erosion control devices (except sediment basins) installed on the project when one half the capacity, by height, depth or volume has been reached. Clean the sediment from all temporary sediment basins installed on a project when one third the capacity of the storage volume has been filled.

Handle sediment excavated from any erosion or sediment control device in one of the following ways:

- Remove sediment from the immediate area and immediately stabilize it to prevent the material from refilling any erosion or sediment control device.
- Place and mix it in the roadway embankment, or waste it in an area approved by the Engineer.
- Repair or replace at no cost to the Department, any erosion or sediment control devices that are not functioning properly or are damaged due to negligence or abuse.

B. Temporary Silt Fence

Maintenance of Temporary Silt Fence consists of furnishing all labor, tools, materials, equipment and necessary incidentals to remove and dispose of accumulated sediment down to the original ground line (0 % filled). Also included is the removal of sediment accumulations ("filtercake") on the fabric by tapping the fabric on the downstream side.

C. Silt Control Gates

Maintenance of Temporary Silt Control Gates consists of all labor, tools, materials, equipment and necessary incidentals to remove and dispose of accumulated sediment down to the original ground line (0% filled). When applicable, this item will include the removal of sediment accumulations on the fabric by tapping the fabric on the downstream side.

D. Check Dams (all types)

Maintenance of Temporary Erosion Control Check Dams shall consist of all labor, tools, materials, equipment and necessary incidentals to remove and dispose of accumulated sediment down to the original ground line (0% filled). This item also includes the removal of any material deposited in sump holes. When applicable, this item will include the removal of sediment accumulations on the fabric by tapping the fabric on the downstream side, or from the baled straw by similar means.

E. Silt Retention Barrier

Maintenance of Temporary Silt Retention Barrier consists of all labor, tools, materials, equipment and necessary incidentals to remove and dispose of accumulated sediment down to the original ground line (0% filled).

F. Temporary Sediment Basins

Maintenance of Temporary Sediment Basins consists of all labor, tools, materials, equipment and necessary incidentals to remove and dispose of accumulated sediment down to the original bottom of the basin. This also includes removing accumulated sediment from the rock filter and restoring the rock filter to its original specified condition and any work necessary to restore all other components to the pre-maintenance conditions.

G. Sediment Barrier (baled straw)

Maintenance of sediment barrier (baled straw) consists of furnishing all labor, tools, materials, equipment and necessary incidentals to remove and dispose of accumulated sediment down to the original ground line (0 % filled). Also included is the removal of sediment accumulations on the bales by tapping.

H. Triangular Silt Barrier

Maintenance of Triangular Silt Barrier consists of all labor, tools, materials, equipment and necessary incidentals to remove and dispose of accumulated sediment down to the original ground line (0% filled).

I. Retrofit:

Maintenance of the retrofit device consists of all labor, tools, materials, equipment and necessary incidentals to remove and properly dispose of accumulated sediment in the permanent detention pond being utilized as a temporary sediment basin. This item also includes any maintenance that is required to ensure the retrofit device is maintained per Plan details and any maintenance of the stone filter to maintain its filtering ability, including cleaning and replacement.

J. Construction Exit:

Maintenance of the construction exit consists of all labor, tools, materials, equipment and incidentals, including additional stone and geotextile fabric as required to prevent the tracking or flow of soil onto public roadways. This includes, scarifying existing stone, cleaning existing stone, or placement of additional stone.

Cleaning of the construction exit by scraping and/or brooming only will not be measured for payment.

K. Inlet Sediment Trap

Maintenance of inlet sediment traps consists of all labor, tools, materials, equipment and necessary incidentals to remove and properly dispose of accumulated sediment in the trap and/or the excavated area adjacent to the trap. It also includes any maintenance that is required to remove sediment accumulations ("filtercake") from the material selected to construct the inlet sediment trap.

L. Rock Filter Dams

Maintenance of rock filter dams consists of all labor, tools, materials, equipment, and necessary incidentals to remove and dispose of accumulated sediment down to the original ground line (0% filled). This item also includes the removal of any material deposited in sump holes.

M. Stone Filter Berms

Maintenance of stone filter berms consists of all labor, tools, materials, equipment, and necessary incidentals to remove and dispose of accumulated sediment down to the original ground line (0% filled). This item also includes the removal of any material deposited in sump holes.

N. Stone Filter Rings

Maintenance of stone filter rings consists of all labor, tools, materials, equipment, and necessary incidentals to remove and dispose of accumulated sediment down to the original ground line (0% filled). This item also includes the removal of any material deposited in sump holes.

165.3.06 Quality Acceptance

General Provisions 101 through 150.

165.3.07 Contractor Warranty and Maintenance

General Provisions 101 through 150.

165.4 Measurement

A. Temporary Silt Fence:

Maintenance of temporary silt fence, Type A, B, or C, is the actual linear feet (meter) of silt fence, measured in place, where sediment is removed.

B. Silt Control Gates:

Maintenance of temporary silt control gates, type I, II, III or IV, as specified on the Plans, is measured as a single unit.

C. Check Dams (All Types):

Maintenance of temporary erosion control check dams as specified on the Plans is the actual linear feet (meter) of baled straw, type c silt fence or rip rap, measured in place, where sediment is removed.

D. Silt Retention Barrier:

Maintenance of temporary silt retention barrier as specified on the Plans, is measured by the linear foot (meter) where sediment is removed.

E. Temporary Sediment Basins:

Maintenance of temporary sediment basins as specified on the Plans, is measured as a single unit.

F. Sediment Barrier (baled straw)

Maintenance of sediment barrier (baled straw), is the actual linear feet (meter) of baled straw measured in place, where sediment is removed.

G. Triangular Silt Barrier:

Maintenance of triangular silt barrier as specified on the plans, is measured by the linear foot (meter) where sediment is removed.

H. Retrofit:

Maintenance of retrofit device at the location specified on the Plans is measured per each.

I. Construction Exit:

Maintenance of construction exit at the location specified on the Plans, or as directed by the Engineer is measured per each.

J. Inlet Sediment Trap

Maintenance of inlet sediment trap at the location specified on the Plans, or as added by the Engineer is measured per each.

K. Rock Filter Dams

Maintenance of rock filter dams as specified on the plans is measured as a single unit.

L. Stone Filter Berms

Maintenance of stone filter berms as specified on the plans is measured as a single unit.

M. Stone Filter Rings

Maintenance of stone filter rings as specified on the plans is measured as a single unit.

165.4.01 Limits

General Provisions 101 through 150.

165.5 Payment

A. Temporary Silt Fence:

Maintenance of temporary silt fence, Type A, B, or C, is paid for at the contract unit price bid per linear foot (meter).

B. Silt Control Gates:

Maintenance of temporary silt control gates, Type I, II, III, or IV as specified on the Plans is paid for at the contract unit price bid per each.

C. Check Dams (All Types):

Maintenance of Check Dams as specified on the Plans is paid for at the contract unit price bid per linear foot (meter).

D. Silt Retention Barrier:

Maintenance of temporary silt retention barrier as specified on the Plans is paid for at the contract unit price bid per linear foot (meter).

E. Temporary Sediment Basins:

Maintenance of temporary sediment basins as specified on the Plans is paid for at the contract unit price bid per each.

F. Sediment Barrier (baled straw):

Maintenance of sediment barrier (baled straw) as specified on the Plans is paid for at the contract unit price bid per linear foot (meter).

G. Triangular Silt Barrier:

Maintenance of triangular silt barrier as specified on the Plans is paid for at the contract unit price bid per linear foot (meter).

H. Retrofit:

Maintenance of the retrofit device at the location specified on the Plans is paid for at the contract unit price bid per each.

I. Construction Exit:

Maintenance of the construction exit at the location specified on the Plans or as added by the Engineer is paid for at the contract unit price per each.

J. Inlet Sediment Trap

Maintenance of the inlet sediment trap at the location specified on the Plans or at the location specified by the Engineer is paid for at the contract unit price per each.

K. Rock Filter Dams

Maintenance of rock filter dams as specified on the plans is paid for at the contract unit price bid per each.

L. Stone Filter Berms

Maintenance of stone filter berms as specified on the plans is paid for at the contract unit price bid per each.

M. Stone Filter Rings

Maintenance of stone filter rings as specified on the plans is paid for at the contract unit price bid per each.

Payment will be made under:

Item No. 165	Maintenance of temporary silt fence Type____	per linear foot (meter)
Item No. 165	Maintenance of silt control gate Type ____	per each
Item No. 165	Maintenance of check dams (all types)	per linear foot (meter)
Item No. 165	Maintenance of silt retention barrier	per foot (meter)
Item No. 165	Maintenance of temporary sediment basin, Sta. No. ____	per each
Item No. 165	Maintenance of sediment barrier (baled straw)	per linear foot (meter)
Item No. 165	Maintenance of triangular silt barrier	per linear foot (meter)
Item No. 165	Maintenance of retrofit, Sta. No.____	per each
Item No. 165	Maintenance of construction exit	per each
Item No. 165	Maintenance of inlet sediment trap	per each
Item No. 165	Maintenance of rock filter dam	per each
Item No. 165	Maintenance of stone filter berm	per linear foot (meter)
Item No. 165	Maintenance of rock filter dam	per each

165.5.01 Adjustments

General Provisions 101 through 150.

Section 166—Restoration or Alteration of Lakes and Ponds

166.1 General Description

This Specification gives the Contractor responsibility for altering or restoring a lake or pond and adjoining property. Refer to Subsection 107.13, "Protection and Restoration of Property and Landscape."

166.1.01 Definitions

In this Specification, "lake" means "lake or pond," regardless of its shape or size. Use the method indicated on the Plans and in the Proposal.

166.1.02 Related References

A. Standard Specifications

Section 107—Legal Regulations and Responsibility to the Public

B. Referenced Documents

General Provisions 101 through 150.

166.1.03 Submittals

General Provisions 101 through 150.

166.2 Materials

Materials required to complete the work are shown on the Plans or used as directed.

166.2.01 Delivery, Storage, and Handling

General Provisions 101 through 150.

166.3 Construction Requirements

166.3.01 Personnel

General Provisions 101 through 150.

166.3.02 Equipment

Provide equipment necessary to complete the work or as directed.

166.3.03 Preparation

General Provisions 101 through 150.

166.3.04 Fabrication

General Provisions 101 through 150.

166.3.05 Construction

A. Restore Lakes and Dams

When indicated on the Plans and in the Proposal, use the lake or pond area as a settling basin to contain silt, debris, or other foreign matter during the construction period.

Before the work begins, the Engineer will establish the condition of the lake and dam and determine the existing contours of the lake bottom. Restore lakes and dams as follows:

1. Remove, at no additional cost to the Department, the silt, etc., as often as necessary to avoid polluting the downstream area.

2. When roadway work progresses enough that a normal stand of grass can prevent erosion and pollution of the lake, excavate and clean the lake of foreign matter. Return the lake to the original contour and condition or proposed contour, if different than the original.
3. Dispose of material removed in a manner satisfactory to the Engineer.
4. After removing the deleterious materials from the lake, grade and grass disturbed areas not under water.

B. Alter Lakes or Ponds

If alteration is shown as a Pay Item, work shall include activities to change the physical size, shape, or depth of the lake; or to change the high-water level, or elevation of the dam or portions of it. This work shall be done according to the Plan details.

166.3.06 Quality Acceptance

General Provisions 101 through 150.

166.3.07 Contractor Warranty and Maintenance

General Provisions 101 through 150.

166.4 Measurement

Alteration or restoration of a lake is measured by the unit as indicated on the Plans and in the Proposal. Payment is full compensation for all necessary labor, equipment, tools, materials and incidentals required to complete the work to the satisfaction of the Engineer.

166.4.01 Limits

General Provisions 101 through 150.

166.5 Payment

Alteration or restoration of a lake is paid for at the Contract Unit Price bid per each for the specified operation as defined in Subsection 166.3.05, “Construction.” Payment is full compensation for furnishing all labor, equipment, materials, tools and incidentals, and performing the work.

A. Restoration of a Lake

When the lake or pond is used as a settling basin, the work is paid for on the following schedule:

- Ten percent of the bid amount will be paid each time the lake or pond is cleaned of silt and debris during the construction period up to four occurrences.
- The remaining amount will be paid when the final cleaning and restoration are complete and accepted.

B. Alteration of a Lake

Alteration is paid on a pro-rata basis of the bid amount as the work progresses.

Payment will be made under:

Item No. 166	Restoration of lake, sta.__	Per each
Item No. 166	Alteration of lake, sta.__	Per each

166.5.01 Adjustments

General Provisions 101 through 150.

Section 167—Water Quality Monitoring

167.1 General Description

This Specification establishes the Contractor's responsibility to meet the requirements of the National Pollutant Discharge Elimination System (NPDES) Infrastructure Permit No. GAR 100002 as it pertains to Part IV. Erosion, Sedimentation and Pollution Control Plan.

167.1.01 Definitions

Certified Personnel— certified personnel are defined as persons who have successfully completed the appropriate certification course approved by the Georgia Soil and Water Conservation Commission. For Department projects the certified person must also have successfully completed the Department's WECS certification course.

167.1.02 Related References

A. Standard Specifications

Section 161—Control of Soil Erosion and Sedimentation

B. Referenced Documents

NPDES Infrastructure Permit No. GAR 100002, Part IV

GDOT WECS seminar.

Environmental Protection Divisions Rules and Regulations (Chapter 391-3-26)

Georgia Soil and Water Conservation Commission Certification Level IA course.

OCGA 12-7

167.1.03 Submittals

General Provisions 101 through 150

167.2 Materials

General Provisions 101 through 150.

167.2.01 Delivery, Storage, and Handling

General Provisions 101 through 150.

167.3 Construction Requirements

167.3.01 Personnel

Use certified personnel to perform all monitoring, sampling, inspections, and rainfall data collection.

Use the Contractor designated WECS or select a prequalified consultant from the Qualified Consultant List (QCL) to perform water quality monitoring.

Ensure that monitoring consultants' employees who perform monitoring, sampling, inspections, and rainfall data collection are GASWCC Certified.

167.3.02 Equipment

Provide equipment necessary to complete the Work or as directed.

167.3.03 Preparation

General Provisions 101 through 150.

167.3.04 Fabrication

General Provisions 101 through 150.

167.3.05 Construction

A. General

Perform inspections, rainfall data collection, testing of samples, and reporting the test results on the project according to the requirements in Part IV of the NPDES Infrastructure permit and this Specification.

Take samples manually or with the use of automatic samplers, according to the permit. Analyze all according to the permit, regardless of the method used to collect the samples.

If samples are analyzed in the field using portable turbidemeters, the monitoring results shall state that they are being used and a digital readout of NTUs is what is provided.

Submit bench sheets, work sheets, etc., when using portable turbidemeters. There are no exceptions to this requirement.

Perform required inspections and submit all reports required by this Specification within the time frames specified. Failure to perform the inspections within the time specified will result in the cessation of all construction activities with the exception of traffic control and erosion control. Failure to submit the required reports within the times specified will result in non-refundable deductions as specified in Subsection 161.5.01.B.

B. Inspections

The Department will provide one copy of required inspection forms for use and duplication. Inspection forms may change during the contract to reflect regulatory agency needs or the need of the Department. Any costs associated with the change of inspection forms shall be considered incidental. Alternate formats of the provided forms maybe created, used and submitted by the Contractor provided the required content and/or data fields and verbatim certification statements from the Department's current forms are included.

The Engineer shall inspect the installation and condition of each erosion control device required by the erosion control plan within seven days after initial installation. This inspection is performed for each stage of construction when new devices are installed. The WECS shall ensure all installation deficiencies reported by the Engineer are corrected within two business days.

Ensure that the inspections of the areas listed below are conducted by certified personnel and at the frequencies listed. Document all inspections on the appropriate form provided by the Department.

1. Daily:
   a. Petroleum product storage, usage and handling areas
   b. All locations where vehicles enter/exit the site

      Continue these inspections until all entry and exit sites are stabilized and fuel is not stored or transferred on the site. Utilize the Daily inspection form.
2. Weekly and after Rainfall Events:

   Conduct inspections on these areas every seven calendar days and within twenty-four hours after the end of a rainfall event that is 0.5 in (13 mm) or greater:
   a. Disturbed areas not permanently stabilized
   b. Material storage areas
   c. Structural control measures, Best Management Practices (BMPs)
   d. Water quality monitoring locations and equipment

      Continue these inspections until all BMPs have been removed. Utilize the EC-1 Form.
3. Monthly:

Once per month, inspect all areas where final stabilization has been completed. Look for evidence of sediments or pollutants entering the drainage system and or receiving waters. Inspect all permanent erosion control devices that remain in place to verify the maintenance status and that the devices are functioning properly.

Continue these inspections until the Notice of Termination is submitted. Utilize the Monthly inspection form.

C. Reports:

1. Inspection Reports:

   Summarize the results of inspections noted above in writing on the appropriate Daily, Weekly, Monthly or EC-1 form provided by the Department. Include the following information:

   - Date(s) of inspection
   - Name of personnel performing inspection
   - Status of devices
   - Observations
   - Action taken
   - Signature of personnel performing the inspection
   - Any incidents of non-compliance

   The inspection form certification sheet shall be signed by the project WECS and the inspector performing inspections on behalf of the WECS (if not the same person).

   Submit all inspection reports to the Engineer within twenty-four hours of the inspection.

   The Engineer will review the submitted reports and inspect the project to determine their accuracy.

   The Engineer will notify the certified personnel of any additional items that should be added to the inspection report.

   Correct any items listed in the inspection report requiring routine maintenance within 72 (seventy –two) hours of notification.

   Assume responsibility for all costs associated with additional sampling as specified in Part IV.D.6.d.3.(c) of the NPDES GAR 100002 permit if either of these conditions arise:

   - BMPs shown in the Plans are not properly installed and maintained, or
   - BMPs designed by the Contractor are not properly designed, installed and maintained.

2. Monitoring Reports

   a. Report Requirements

      Include in all reports, the following certification statement, signed by the WECS or consultant providing monitoring on the project:

      "I certify under penalty of law that this document and all attachments were prepared under my direct supervision in accordance with a system designed to assure that certified personnel properly gather and evaluate the information submitted. Based on my inquiry of the person or persons who manage the system, or those persons directly responsible for gathering the information, the information is, to the best of my knowledge and belief, true, accurate and complete. I am aware that there are significant penalties for submitting false information, including the possibility of fine and imprisonment for knowing violations."

   b. When a rainfall event requires a sample to be taken, submit a report of the monitoring results to the Engineer within seven working days of the date the sample was obtained. Include the following information:

      1.) Date of sampling

      2.) Rainfall amount on sample date (sample date only)

      3.) NTU of sample & analysis method

      4.) Location where sample was taken (station number, etc.)

      5.) Receiving water or outfall sample

      6.) Project number and county

7.) Whether the sample was taken by automatic sampler or manually (grab sample)

c. Report Requirements with No Qualifying Rainfall Events

In the event that a qualifying rainfall event does not occur prior to the submittal of the NOT (Notice of Termination), submit a report that states “No qualifying rainfall event occurred and no samples were taken.”

d. Test Results

Provide monitoring test results to the Engineer within 48 hours of the samples being analyzed. This notification may be verbal or written. This notification does not replace the requirement to submit the formal monitoring summary to the Engineer within 7 working days of the samples being collected.

3. Rainfall Data Reports

Record the measurement of rainfall once each twenty-four hour period. Measure rainfall data at the active phase of construction on the site.

Project rain gauges and those used to trigger the automatic samplers are to be emptied after every rainfall event. This will prevent a cumulative effect and prevent automatic samplers from taking samples even though the rainfall event was not a qualifying event.

The daily rainfall data supplied by the WECS to the Engineer will be the official rainfall data for the project.

167.3.06 Quality Acceptance

General Provisions 101 through 150.

167.3.07 Contractor Warranty and Maintenance

General Provisions 101 through 150.

167.4 Measurement

Water Quality Inspections in accordance with the inspection and reports sub-sections will be measured for payment by the month up to the time the Contract Time expires. Required inspections and reports after Contract Time has expired will not be measured for payment.

Water Quality Monitoring and Sampling are measured per each. When the monitoring location is receiving water, the upstream and downstream samples constitute one sample. When the monitoring location is an outfall, a single outfall sample constitutes one sample.

167.4.01 Limits

General Provisions 101 through 150. Submit the monitoring summary report to the Engineer within 7 working days

167.5 Payment

Payment for Water Quality Monitoring and Sampling will be made as follows:

Water Quality Monitoring and Sampling per each is full compensation for meeting the requirements of the monitoring sections of the NPDES permit and this Specification, obtaining samples, analyzing samples, any and all necessary incidentals, and providing results of turbidity tests to the Engineer, within the time frame required by the NPDES Infrastructure permit, and this Specification.

This item is based on the rainfall events that require sampling as described in Part IV.D.5 of the permit.

The Department will not pay for samples taken and analyzed for rainfall events that are not qualifying events as compared to the daily rainfall data supplied by the WECS.

Water Quality Inspections will be paid at the Contract Price per month. This is full compensation for performing the requirements of the inspection section of the NPDES permit and this Specification, any and all necessary incidentals, and providing results of inspections to the Engineer, within the time frame required by the NPDES Infrastructure permit, and this Specification.

Payment will be made under:

Item No. 167	Water quality inspections	Per month

Water Quality Monitoring and Sampling will be paid per each.

Payment will be made under:

Item No. 167	Water quality monitoring and sampling	Per each

167.5.01 Adjustments

General Provisions 101 through 150.

Section 168—Comprehensive Monitoring Program

168.1 General Description

Specifications for this work will be included elsewhere in the contract.

Section 170—Silt Retention Barrier

170.1 General Description

This work includes controlling water pollution where embankment construction or material removal may cause stream pollution.

Requirements of Sections 161, 162, and 163 apply to this Item. However, payment will not be made for erosion control items in those sections used with this work.

170.1.01 Definitions

General Provisions 101 through 150.

170.1.02 Related References

A. Standard Specifications

Section 161—Control of Soil Erosion and Sedimentation

Section 162—Erosion Control Check Dams

Section 163—Miscellaneous Erosion Control Items

Section 171—Temporary Silt Fence

B. Referenced Documents

General Provisions 101 through 150.

170.1.03 Submittals

General Provisions 101 through 150.

170.2 Materials

Use suitable permeable or impermeable materials. These materials include canvas duck, clear or black polyethylene film, or fabric that meets the requirements of Type C, temporary silt fence, found in Section 171.

Alternate solutions and materials may be used if Engineer approves.

Use barriers long enough and wide enough to control turbidity.

170.2.01 Delivery, Storage, and Handling

General Provisions 101 through 150.

170.3 Construction Requirements

170.3.01 Personnel

General Provisions 101 through 150.

170.3.02 Equipment

General Provisions 101 through 150.

170.3.03 Preparation

General Provisions 101 through 150.

170.3.04 Fabrication

General Provisions 101 through 150.

170.3.05 Construction

Install a silt retention barrier as follows: Barriers shall be either staked or floating depending upon current, tides, water depth, and other variables, or as shown in the plans and contract.

A. Floating Silt Retention Barrier

1. Confine dredged materials to ponding areas or settlement basins using standpipes or weirs.
2. Place the barrier approximately 25 ft (7.5 m) outside the affected construction area, and at a depth within 5 ft (1.5 m) of the bottom.
3. If the body of water has a significant current, place the barrier parallel to the water flow.
4. Vary the dimensions and methods to suit the conditions and to meet the requirements of other local and State water control agencies to ensure that silt dispersion is effectively controlled.
5. Provide a fabric that is weighted to prevent the bottom from floating.

B. Staked Silt Retention Barrier

1. Where a staked barrier is used to protect a stream or inundated area, ensure the fabric:
   a. Extends to the bottom of the stream or inundated area and is weighted to prevent it from floating
   b. Is not trenched in at the bottom
   c. Extends 1 foot (300 mm) above normal water
2. Posts:
   Options: Either 2 inch (50 mm) x 4 inch (100 mm) wood, 2 ½ inch (62.5 mm min. diameter) wood, or steel at a minimum of 1.33 pounds per foot (1.980 kg/m)
   a. space posts at a maximum spacing of 4 feet (1.2 m)
   b. posts are minimum of 5 feet (1.5 m) in length
   c. posts extend a minimum of 18 inches (450 mm) into the soil

170.3.06 Quality Acceptance

General Provisions 101 through 150.

170.3.07 Contractor Warranty and Maintenance

General Provisions 101 through 150.

170.4 Measurement

Silt retention barriers, either floating or staked, are measured by the linear foot (meter) of barrier required to prevent siltation and pollution.

170.4.01 Limits

General Provisions 101 through 150.

170.5 Payment

The applicable requirements of Sections 161, 162, and 163 apply to this Item, except that the erosion control items contained in those sections will not be paid for when used in conjunction with this work.

Silt retention barriers will be paid for at the Contract Unit Price for each barrier, complete in place and accepted. Payment is full compensation for furnishing materials, erecting the barrier, removing, and disposing of the barrier when no longer required.

Payment will be made under:

Item No. 170	Floating silt retention barrier	Per linear foot (meter)
Item No. 170	Staked silt retention barrier	Per linear foot (meter)

170.5.01 Adjustments

General Provisions 101 through 150.

Section 171—Silt Fence

171.1 General Description

This work includes furnishing, installing, and removing a water permeable filter fabric fence to remove suspended particles from drainage water.

171.1.01 Definitions

General Provisions 101 through 150.

171.1.02 Related References

A. Standard Specifications

Section 163—Miscellaneous Erosion Control Items

Section 700—Grassing

Section 862—Wood Posts and Bracing

Section 881—Fabrics

Section 894—Fencing

B. Referenced Documents

ASTM D 3786

ASTM D 4355

ASTM D 4632

ASTM D 4751

GDT 87

QPL 36

171.1.03 Submittals

General Provisions 101 through 150.

171.2 Materials

Materials shall meet the requirements of the following Specifications:

Material	Section
Filter Fabrics	881
Fencing	894
Wood Posts and Bracing	862

Conditions during Project construction will affect the quantity of the silt fence to be installed.

The Engineer may increase, decrease, or eliminate the quantity at his or her direction. Variations in quantity are not changes in details of construction or in the character of the work.

For Type A, B, and C fences, use fabric as specified in Subsection 881.2.07, “Silt Fence Filter Fabric.”

171.2.01 Delivery, Storage, and Handling

During shipment and storage, wrap the fabric in a heavy-duty covering that will protect the cloth from sunlight, mud, dust, dirt, and debris. Do not expose the fabric to temperatures greater than 140 °F (60 °C).

When installed, the Engineer will reject the fabric if it has defects, rips, holes, flaws, deterioration, or damage incurred during manufacture, transportation, or storage.

171.3 Construction Requirements

171.3.01 Personnel

General Provisions 101 through 150.

171.3.02 Equipment

General Provisions 101 through 150.

171.3.03 Preparation

General Provisions 101 through 150.

171.3.04 Fabrication

General Provisions 101 through 150.

171.3.05 Construction

Install the silt fence according to this Specification, as shown on the Plans, or as directed by the Engineer as; perimeter, ditch check or similar protection.

A. Install Silt Fence

1. Install silt fence by either of the following methods:
   a. Excavated Trench Method

      Excavate a trench 4 to 6 in (100 to 150 mm) deep using equipment such as a trenching machine or motor grader. If equipment cannot be operated on the site, excavate the trench by hand.

   b. Soil Slicing Method

Create a mechanical slice in the soil 8 to 12 in (200 to 300 mm) deep to receive the silt fence. Ensure that the width of the slice is not more than 3 in (75 mm). Mechanically insert the silt fence fabric into the slice in a simultaneous operation with the slicing that ensures consistent depth and placement.

2. Install the first post at the center of the low point (if applicable). Space the remaining posts a maximum of 6 ft (1.8 m) apart for Types A and B fence and 4 ft (1.2 m) apart for Type C fence.
3. Bury the posts at least 18 in (450 mm) into the ground. If this depth cannot be attained, secure the posts enough to prevent the fence from overturning from sediment loading.
4. Attach the filter fabric to the post using wire, cord, staples, nails, pockets, or other acceptable means.
   a. **Staples and Nails (Wood Posts):** Evenly space staples or nails with at least five per post for Type A fence and four per post for Type B fence.
   b. **Pockets:** If using pockets and they are not closed at the top, attach the fabric to a wood post using at least one additional staple or nail, or to a steel post using wire. Ensure that the additional attachment is within the top 6 in (150 mm) of the fabric.
   c. Install the filter fabric so that 6 to 8 in (150 to 200 mm) of fabric is left at the bottom to be buried. Provide a minimum overlap of 18 in (450 mm) at all splice joints.
   d. For Type C fence:
      1. Woven Wire Supported
         - Steel Post: Use wire to attach the fabric to the top of the woven wire support fence at the midpoint between posts. Also, use wire to attach the fabric to the post.
      2. Polypropylene Mesh Supported
         - Wood Post: Use at least six staples per post. Use two staples in a crisscross or parallel pattern to secure the top portion of the fence. Evenly space the remaining staples down the post.
         - Steel Post: Use wire to attach the fabric and polypropylene mesh to the post.
5. Install the fabric in the trench so that 4 to 6 in (100 to 150 mm) of fabric is against the side of the trench with 2 to 4 in (50 to 100 mm) of fabric across the bottom in the upstream direction.
6. Backfill and compact the trench to ensure that flow cannot pass under the barrier. When the slice method is used, compact the soil disturbed by the slice on the upstream side of the silt fence first, and then compact the downstream side.
7. When installing a silt fence across a waterway that produces significant runoff, place a settling basin in front of the fence to handle the sediment load, if required. Construct a suitable sump hole or storage area according to Section 163.

B. Install silt fence ditch checks

1. Temporary Silt Fence Ditch Checks

   Temporary silt fence ditch checks shall be constructed of the material type selected and shown on the approved erosion and sediment control plan. Item installation shall be constructed and placed according to approved Plan details. Temporary ditch checks shall remain in place until the permanent ditch protection is in place or being installed and the removal is approved by the Engineer.

C. Remove the Silt Fence

1. Keep all silt fences in place unless or until the Engineer directs it to be removed. A removed silt fence may be used at other locations if the Engineer approves of its condition.
2. After removing the silt fence, dress-the area to natural ground, grass-and mulch the area according to Section 700.
3. The silt fence shall remain until the Project is accepted or until the fence is removed. Also, remove and dispose of the silt accumulations at the silt fence.

4. Remove and replace any deteriorated filter fabric that reduces the effectiveness of the silt fence.
5. Repair or replace any undermined silt fence at no additional cost to the Department.

171.3.06 Quality Acceptance

Approved silt fence is listed in QPL 36. Approved fabrics must consistently exceed the minimum requirements of this Specification as verified by the Office of Materials. The Office of Materials will remove fabric that fails to meet the minimum requirements of this specification from the QPL until the products' acceptability has been reestablished to the Department's satisfaction.

At the time of installation, the Engineer will reject the fabric if it has defects, rips, holes, flaws, deterioration, or damage incurred during manufacture, transportation, or storage.

171.3.07 Contractor Warranty

The silt fence shall remain until the Project is accepted or until the fence is removed. Also, remove and dispose of the silt accumulations at the silt fence.

Remove and replace any deteriorated filter fabric that reduces the effectiveness of the silt fence.

Repair or replace any undermined silt fence at no additional cost to the Department.

171.4 Measurement

The quantity of silt fence, silt fence ditch checks to be paid for is the actual number of linear feet (meters) of silt fence, measured in place from end post to end post of each separate installation. The silt fence must be complete and accepted.

171.4.01 Limits

General Provisions 101 through 150.

171.5 Payment

Silt fence Type A, B, or C measured as defined in Subsection 171.4, "Measurement," is paid for at the Contract Unit Price bid per linear foot (meter).

Payment is full compensation for the following:

- Furnishing materials
- Erecting the fence
- Dressing and grassing, when required
- Removing the fence, when required

Payment for this Item is made as follows:

- Seventy-five percent of the Contract Price bid per linear foot (meter) is paid when each fence is complete in place.
- Twenty-five percent is paid at removal or acceptance.

If the silt fence must be repaired or removed, as the result of neglect or damage, perform the work at no additional cost to the Department.

Payment will be made under:

Item No. 171	Silt fence, type__	Per linear foot (meter)

171.5.01 Adjustments

General Provisions 101 through 150.

Section 172—Soil Test Boring

172.1 General Description

Specifications for this work will be included elsewhere in the Contract.

Section 201—Clearing and Grubbing Right of Way

201.1 General Description

This work includes clearing, grubbing, removing and disposing of vegetation, buildings and debris within the entire Right-of-Way and easement areas adjacent to the Right-of-Way or as designated by the Engineer. Except, do not remove objects designated to remain or removed according to other sections of these Specifications. This work also includes preserving (from injury and defacement) vegetation and objects designated to remain in place.

201.1.01 Definitions

Clearing: Removing and disposing trees, brush, stumps, logs, grass, weeds, roots, decayed vegetable matter, poles, stubs, rubbish, refuse dumps, sawdust piles, and loose boulders of 1 yd^3 (1 m^3) or less existing outside of the construction limits, debris resting on or protruding through the ground surface, or appearing on the Right-of-Way before final acceptance of the work.

Clearing also includes removing and disposing of obstructions, such as fences, bridges, buildings, and other incidental structures within the Right-of-Way unless the work or a portion of the work is:

- Removed as excavation
- Shown in the Proposal as a separate Pay Item
- Performed by others

Grubbing: Removal from the Right-of-Way and proper disposal of all objectionable matter defined above under clearing, which is embedded in the underlying soil.

Grubbing also includes removing and properly disposing of parking lots, abandoned pavements, sidewalks, driveways, catch basins, drop inlets, pipes, manholes, curbing, retaining walls, utilities, foundations, paved floors, underground tanks (for removal of underground tanks see Section 217), and other structures within the Right-of-Way unless the work or portions of the work are:

- Obstructions removed as one of the excavation items
- Shown in the Proposal as separate Pay Items
- Removed by others
- To be incorporated in the project.

Objectionable Roots: Any of the following types of roots:

- Matted trees and brush roots (regardless of the size of the roots)
- Individual roots more than 0.75 in (20 mm) diameter
- Individual roots more than 3 ft (1 m) long regardless of size
- Large quantities of smaller roots present in the top 1 ft (300 mm) of the finished subgrade or road surface when detrimental to the work as determined by the Engineer.

Stumps: The butt of a tree with a diameter of 4 in (100 mm) or more.

201.1.02 Related References

A. Standard Specifications

Section 107—Legal Regulations and Responsibility to the Public

Section 109—Measurement and Payment

Section 160—Reclamation of Material Pits and Waste Areas

Section 161—Control of Erosion and Sedimentation

Section 208—Embankments

Section 215 – Removal of Solid Waste

Section 217—Removal of Underground Storage Tanks

B. Referenced Documents

General Provisions 101 through 150.

201.1.03 Submittals

General Provisions 101 through 150.

201.2 Materials

General Provisions 101 through 150.

201.2.01 Delivery, Storage, and Handling

General Provisions 101 through 150.

201.3 Construction Requirements

201.3.01 Personnel

General Provisions 101 through 150.

201.3.02 Equipment

General Provisions 101 through 150.

201.3.03 Preparation

General Provisions 101 through 150.

201.3.04 Fabrication

General Provisions 101 through 150.

201.3.05 Construction

A. General

Establish Right-of-Way and construction lines. The Engineer will designate which trees, shrubs, and plants will remain in the ground. Preserve things designated to remain.

Apply the requirements of Subsection 107.22, Subsection 107.23, and Section 161 to clearing and grubbing operations.

Strip grass immediately ahead of grading.

To prevent the spread of “Introduced Invasive Pest Species”, do the following:

1. Adhere to the restrictions of Section 155.3.05.A for moving soil, mulch, sod or plants, stump wood or timber with soil attached.

2. Adhere to the requirements of Section 155.3.05.B for cleaning of equipment, except that the USDA inspection will not be required for vegetative matter.
3. Dispose of vegetative parts of plants that may reproduce (roots and aboveground parts that bear fruit) by burning on site (where permitted) or bury with a minimum cover of 3 feet (1 meter) at an approved site. Obtain the Engineer's approval for any other methods of disposal.

B. Clearing

Clear objects within the Right-of-Way and easement areas as follows:

1. Choose a method of clearing that prevents damage to property, trees, or retained shrubbery in or outside of the Right-of-Way.
2. Remove stumps that are part of the clearing operations as specified under Subsection 201.3.05.C, "Grubbing" .
3. Cut the stumps not grubbed as specified in this section.
4. Dispose of cleared materials as specified in Subsection 201.3.05.E.

C. Grubbing

Grubbing consists of removing and disposing objectionable matter embedded in the underlying soil (defined in Subsection 201.3.05.B, "Clearing") from the Right-of-Way and easement areas.

1. Grubbing Operations

   When grubbing, remove abandoned obstructions referenced in Subsection 201.1.01 "Definitions" to the following depths:

   a. Under Pavements: Remove to a depth of at least 3 ft (1 m) below the finished subgrade.
   b. Underneath Other Structures: Remove to at least 3 ft (1 m) below the foundations of any proposed structure, including installations such as guard rail posts and utility poles.
   c. Elsewhere in the Right-of-Way and easement areas: Remove as follows:
      1) Remove to at least 3 ft (1 m) below the finished surface of slopes and shoulders and 1 ft (300 mm) below natural ground outside construction lines.
      2) Thoroughly crack or break abandoned structures that may impound water. These structures include concrete floors, basements, and catch basins within 10 ft (3 m) of finished grade.
      3) Break floors so that no section greater than 10 ft^2 (1 m^2) remains intact.
5. Except as modified under Subsection 201.3.05.D, use the following procedure to perform grubbing:
   a. Remove stumps and other matter that cannot be removed by a root rake. Remove stumps to a minimum depth of 2 ft (600 mm) below the ground line.
   b. Rake areas containing objectionable roots to a depth of at least 6 in (150 mm) below the surface.
   c. Remove remaining objectionable matter by hand or other suitable means. When necessary, remove small roots (see Subsection 201.1.01 "Objectionable Roots") detrimental to the work.
   d. Backfill stump holes and compact backfill to the approximate density of the surrounding soil.
   e. Harrow the area with a heavy-duty disc harrow that penetrates and turns the ground to at least 6 in (150 m) deep.
   f. Remove objectionable matter exposed by the harrowing.
   g. Level the harrowed areas with blading equipment. Leave the grubbed areas smooth enough for a power mower.

D. Modifications of Clearing and Grubbing

Modify clearing and grubbing as follows:

1. In Excavation Areas

Modify clearing and grubbing in excavation areas as follows:

a. Harrowing and leveling may be omitted.

b. Do not fill stump holes except when the bottom of any stump hole extends below the elevation of the finished subgrade. In this case, fill the portion of each hole below subgrade elevation with suitable material compacted to at least the density of the surrounding soil.

2. In Embankment Areas

Modify clearing and grubbing in embankment areas as follows:

a. Under 4.5 ft (1.4 m)

Clear and grub areas without modification where the original ground and finished grade differ in elevation 4.5 ft (1.4 m) or less.

b. Over 4.5 ft (1.4 m)

Clear, but do not grub areas covered by embankments exceeding the 4.5 ft (1.4 m) elevation difference specified in step (a) above. Except the removal of unsound or decayed stumps.

Remove and backfill stumps according to Subsection 201.3.05.C.2. When leaving sound stumps in place, cut them off to no more than 6 in (150 mm) above the original ground line.

c. Embankment Areas Over Old Roads

Clear and grub without modification ditches and slopes of old roads to a depth that removes all objectionable matter to provide a firm foundation.

3. Areas Outside of Roadway

Except as specified in this section, clear and grub the entire Right-of-Way and easement areas outside construction limits and leave it smooth and free from loose boulders and debris that would interfere with power mowers. Exceptions to the above requirements are as follows:

a. Selective Clearing

When the Engineer directs to preserve certain trees and plants, protect them from injury. Trees to be removed shall be felled to prevent injury to standing trees, plants, and improvements to be preserved.

Cut off tree branches overhanging the roadway within 20 ft (6 m) of the finished grade close to the boles. Also, remove other branches to create a balanced appearance. Grub areas adjacent to selected trees and shrubs without damage to living roots of the selected trees or shrubs.

b. Special Treatment Areas

Clear special treatment areas according to the Plan notes.

c. Steep Slopes

Clear or selectively clear slopes that are too steep for power mowers (slopes steeper than 3 horizontal to 1 vertical) and clear or selectively clear slopes that are subject to excessive erosion. Do not grub in these areas.

d. Grassed Areas

Do not grub (if the Engineer approves) reasonably large areas outside construction limits covered with grasses and smooth enough for power mowers. Remove stumps, trees, and other objectionable matter.

4. Bridge Sites

Modify clearing and grubbing at bridge sites as follows:

a. Stream Bridges

Clear the Right-of-Way for stream bridges for the full length of the proposed structure. Cut stumps and brush flush with the ground line.

The Engineer will require a second cutting if high water prevents cutting stumps flush with the ground. If the Engineer requires more than two cuttings, see Subsection 201.5 for payment.

Remove drift and stumps where necessary to permit installation of rip rap, piling, piers, abutments, wing walls, and bents. Properly backfill the holes.

Preserve stump and brush root systems at river and stream banks when they have been cut flush with the ground line.

b. Other Bridges

Clear and grub bridges (other than stream bridges) as specified within this specification for roadway areas and areas outside of the roadway.

E. Removal and Disposal of Materials

1. Merchantable Timber and Buildings

The Department may dispose of merchantable timber and buildings, or may allow a property owner to remove them from the land granted for Right-of-Way before the Contractor begins operation. Therefore, the Department does not guarantee that merchantable timber or buildings will be on the Right-of-Way when the work begins.

Material salvaged from removing timber or buildings becomes the property of the Contractor.

Demolish, remove, and dispose of all building structures within the right of way and easement areas including concrete slabs, footings, foundations, etc. except building structures designated to remain in place. Grade to drain all disturbed ground to a reasonably smooth and pleasing appearance, free from loose boulders and other debris that would interfere with the use of power mowers. Grass all disturbed areas.

Prior to demolition or removal:

a. Inspect all building structures for the presence of asbestos. The inspection shall be done by an EPA Asbestos Hazard Emergency Response Act (AHERA) accredited inspector whose certification is current.

b. Provide a copy of all inspection reports including the inspector's credentials to the Engineer.

c. Provide written notice of intent to demolish to the Georgia Environmental Protection Division (EPD) of the Georgia Department of Natural Resources in accordance with EPD regulations with a copy to the engineer. This notice is required even if there is no asbestos present.

If there is asbestos present, its removal shall be done by a contractor licensed with the EPD in accordance with the Rules of Georgia Department of Natural Resource Environmental Protection Division chapter 391-3-14-04. All asbestos removal and disposal shall be done in accordance with EPD regulations. All asbestos removal shall be considered as Extra Work and payment will be made in accordance with Subsection 109.05.

2. Combustible Material

Abide by Federal, State, and local codes when the Right-of-Way (or any portion of the Right-of-Way) lies within an area where burning is restricted. All combustible material except sawdust piles may be burned on the Right-of-Way except where prohibited by Federal, State, or local air pollution control regulations.

a. Prevent fire from spreading to adjacent areas and damaging living trees and shrubs designated to remain on the Right-of-Way and easement areas.

b. Prevent damage to public and private installations either within or adjacent to the Right-of-Way and prevent damage to traveling public.

c. Obtain suitable areas for burning the combustible material when necessary (at the Contractor's expense). Burning area are subject to the approval of the Engineer.

d. Dispose of unburned combustible material according to Subsection 201.3.05.E.3. If the disposal area is located on private property, present written authority to the Engineer (signed by the property owner) granting the Contractor and the Department permission to use the area for the purpose intended. Reclaim the disposal area according to Section 160 except that the reclamation is at the Contractor's expense.

e. Completely remove sawdust within the construction limits. Haul the sawdust to approved disposal areas, or deposit it on the Right-of-Way in a layer less than 3 in (75 mm) deep. Immediately mix the sawdust with the underlying soil by discing and harrowing. Leave the harrowed surface smooth.

3. Solid Waste Material

Place solid waste material either in the embankment (provided the material is satisfactory for embankment construction) or in a Department-approved solid waste disposal site.

The classification of non-regulated and regulated solid waste materials are defined by the Environmental Protection Division (EPD) of the Georgia Department of Natural Resources (GDNR) rules and regulations. Dispose of these materials using the following procedures.

a. Non-regulated Solid Waste Material

1) Excess material such as soil, rock, brick, concrete (with and without reinforcement), and cured asphalt may be placed within the Right-of-Way, provided there is available room. Place these materials according to Section 208 and as directed by the Engineer.

2) Common fill such as soil, rock, brick, and concrete (with and without reinforcement) may be placed outside the Right-of-Way. Place the material in uniform layers 3 ft (1 m) thick or less and distributed to avoid pockets. Fill voids with finer material. Cover the last layer of fill with at least 2 ft (600 mm) of soil. Construct the fill according to Section 208, except compact it to at least 90 percent of the maximum laboratory dry density.

3) Materials that may be recycled or reused such as asphaltic concrete, Portland cement concrete, plastic, metal, and materials that qualify under EPD regulations for sale or use may be reclaimed by the Contractor.

b. Regulated Material

1) Obtain an inert landfill permit according to GDNR/EPD rules for the following material deposed of off the R/W: Inert waste items listed in Subsection 201.3.05.E.3.a if not properly layered and compacted, and organic debris such as stumps, limbs and leaves, cured asphalt. Or, take the material to a permitted solid waste landfill.

2) Take other regulated construction/demolition and non-hazardous solid waste, such as forms, barrels, plastic, and other by-products of construction to a construction/demolition landfill or to a municipal solid waste landfill.

3) Dispose of oils, solvents, fuels, untreated lead paint residue, and other solid hazardous waste through a properly licensed hazardous waste disposal facility.

Remove municipal solid waste discovered during construction or shown on the Plans according to Section 215.

201.3.06 Quality Acceptance

General Provisions 101 through 150.

201.3.07 Contractor Warranty and Maintenance

General Provisions 101 through 150.

201.4 Measurement

The Department does not measure clearing and grubbing separately for payment. The area is considered the full Right-of-Way width for the length of the Project including slope and construction easement areas shown on the Plans.

201.4.01 Limits

General Provisions 101 through 150.

201.5 Payment

Payment for this Item, completed and accepted, will be made at the lump sum price bid. The payment will be full compensation for all work specified in this Section including final cleanup as required.

If the Engineer requires more than two cuttings to clear the Right-of-Way for stream bridges (according to Subsection 201.3.05.D.4.a), the additional cuttings will be paid for as a Force Account according to Subsection 109.05.

No separate payment will be made for the disposal of solid waste materials.

Payment will be made under:

Item No. 201	Clearing and grubbing	Per lump sum

201.5.01 Adjustments

General Provisions 101 through 150.

Section 202—Random Clearing and Grubbing

202.1 General Description

This work includes clearing and grubbing borrow and material pits. See Subsection 107.23. It also includes such ditch inlets, outlets, channel changes, and easement areas where clearing and grubbing are required but not shown on the Plans.

202.1.01 Definitions

General Provisions 101 through 150.

202.1.02 Related References

A. Standard Specifications

Section 107—Legal Regulations and Responsibility to the Public

Section 201—Clearing and Grubbing Right-of-Way

B. Referenced Documents

General Provisions 101 through 150.

202.1.03 Submittals

General Provisions 101 through 150.

202.2 Materials

General Provisions 101 through 150.

202.2.01 Delivery, Storage, and Handling

General Provisions 101 through 150.

202.3 Construction Requirements

202.3.01 Personnel

General Provisions 101 through 150.

202.3.02 Equipment

General Provisions 101 through 150.

202.3.03 Preparation

General Provisions 101 through 150.

202.3.04 Fabrication

General Provisions 101 through 150.

202.3.05 Construction

Perform the work according to Section 201.

202.3.06 Quality Acceptance

General Provisions 101 through 150.

202.3.07 Contractor Warranty and Maintenance

General Provisions 101 through 150.

202.4 Measurement

The area of completed and accepted clearing and grubbing is measured in acres (hectares). Only the area cleared and grubbed as shown on the Plans or as designated by the Engineer is measured.

The Department will make no separate payment for removing grass, weeds, debris, small underbrush, other vegetation from cultivated lands, and isolated trees or stumps. Include the cost for removing these items in the price bid for other Pay Items.

202.4.01 Limits

General Provisions 101 through 150.

202.5 Payment

The Department will pay for Clearing and Grubbing and Clearing at the Contract Unit Price per acre (hectare), which is full compensation for all work specified.

Payment will be made under:

Item No. 202	Clearing and grubbing	Per acre (hectare)
Item No. 202	Clearing	Per acre (hectare)

202.5.01 Adjustments

General Provisions 101 through 150.

Section 203—Foundation Exploration

203.1 General Description

Specifications for this work will be included elsewhere in the Contract.

Section 204—Channel Excavation

204.1 General Description

This work includes excavating and properly disposing of material encountered when changing, cleaning, or widening waterway channels. Excavation for inlet ditches, outlet ditches, tail ditches, and take-off, intercepting, side, or berm ditches will not be classified as channel excavation. This work is included in Section 205

204.1.01 Definitions

General Provisions 101 through 150.

204.1.02 Related References

A. Standard Specifications

Section 205—Roadway Excavation

B. Related Documents

General Provisions 101 through 150.

204.1.03 Submittals

General Provisions 101 through 150.

204.2 Materials

General Provisions 101 through 150.

204.2.01 Delivery, Storage, and Handling

General Provisions 101 through 150.

204.3 Construction Requirements

204.3.01 Personnel

General Provisions 101 through 150.

204.3.02 Equipment

General Provisions 101 through 150.

204.3.03 Preparation

General Provisions 101 through 150.

204.3.04 Fabrication

General Provisions 101 through 150.

204.3.05 Construction

Excavate channel to the lines, grades, typical sections, and details shown on the Plans or established by the Engineer.

Coordinate the work with grading, constructing drainage structures, and performing other work on the project.

1. Maintain the channel to ensure continued adequate drainage until Final Acceptance of the Project.
2. Use suitable excavated material as defined in the Plans, or permitted by the Engineer, when constructing roadway embankments.
3. Waste and deposit all surplus excavated material as follows:
   a. Do not deposit material from channel excavation within 3ft (1 m) of the channel edge.
   b. Do not deposit excavated material within jurisdictional wetlands, either on or off the Right-of-Way.
   c. The Engineer may permit surplus material to be wasted in flushing out slopes if ditch lines, slope stability, and other features are not impaired. Do not leave material in unsightly piles. Spread it in uniform layers, neatly leveled and shaped. Leave adequate openings in spoil banks to allow adjacent land surfaces to drain.
   d. Apply provisions pertaining to soil erosion and stream pollution to this work.

204.3.06 Quality Acceptance

General Provisions 101 through 150.

204.3.07 Contractor Warranty and Maintenance

General Provisions 101 through 150.

204.4 Measurement

Channel excavation, authorized and accepted by the Engineer, is measured in its original position by the method of average end areas.

204.4.01 Limits

General Provisions 101 through 150.

204.5 Payment

The Department will pay for the quantity of channel excavation as measured above at the Contract Unit Price per cubic yard (meter). Payment will not be made for excavation beyond the authorized typical sections, grades, or lengths established by the Engineer.

Payment will be made under:

Item No. 204	Channel excavation	Per cubic yard (meter)

204.5.01 Adjustments

General Provisions 101 through 150.

Section 205—Roadway Excavation

205.1 General Description

Roadway excavation shall conform to the lines, grades, and cross-sections shown on the Plans or established by the Engineer.

If artifacts of historical or archaeological significance are encountered, temporarily stop excavation operations until directed by the Engineer. See Subsection 107.13.A.

Roadway excavation includes the following:

- Excavating, hauling, and placing or disposing of materials (not removed under another Contract Item) from within the limits of areas designated in the Contract.
- Excavating ditches (except channel excavation) and filling and/or plugging abandoned wells (both dug and drilled) located within the Right-of-Way and construction easements according to Georgia Standard 9031H.
- Removing paving, aggregates, and ballast not incorporated into the new work as a result of alignment shifts, grade changes, or reasons that may or may not be shown on the Plans.
- Salvaging aggregates, paving, (only if designated on the Plans) and removed railroad ballast.
- The Department claims salvaged materials unless the Engineer directs that materials be wasted. Dispose of materials not salvaged. Stockpile salvaged materials on the Project unless other sites for stockpiling are shown on the Plans.

205.1.01 Definitions

General Provisions 101 through 150.

205.1.02 Related References

A. Related Specifications

Section 107—Legal Regulations and Responsibility to the Public

Section 109—-Measurement and Payment

Section 201—Clearing and Grubbing Right-of-Way

Section 202—Random Clearing and GrubbingSection 208—Embankments

Section 209—Subgrade Construction

Section 411—Asphaltic Concrete Pavement, Partial Removal

Section 610—Removal of Miscellaneous Roadway Items

B. Related Documents

General Provisions 101 through 150.

205.1.03 Submittals

General Provisions 101 through 150.

205.2 Materials

Define excavated material, regardless of its nature or composition, as "unclassified excavation" unless otherwise specified in the Plans.

The Engineer will designate materials that are unsuitable.

205.2.01 Delivery, Storage, and Handling

A. Disposal of Surplus Material

Unless directed by the Engineer, do not waste excavated material until satisfying embankment and backfill requirements, unless material is designated on the Plans as "Unsuitable for embankment or backfill construction."

Dispose of materials to be wasted according to Subsection 201.3.05.E and the following information:

- Use suitable surplus material to widen embankments uniformly or to flatten fill slopes, or deposit the material in places on the Right-of-Way as directed by the Engineer.
- Do not leave an unsightly pile of material that will damage abutting property or deposit material above the grade of the adjacent roadway unless so directed by the Engineer.
- Do not place the edge of a waste bank nearer than 10 ft (3 m) from the top of a cut slope.

Dispose of unsuitable and surplus materials unless they are used as fill for slopes, abandoned ditches, or other areas shown on the Plans.

- Deposit unsuitable material excavated from ditches and do not allow it to remain within 3 ft (1 m) of the ditch edge. Spread material neatly in level, uniform layers.
- Use suitable materials from ditches for constructing roadway embankments unless otherwise directed by the Engineer.

B. Waste Disposal Areas

When unable to dispose of unsuitable or surplus excavation material on the Right-of-Way, dispose of it in the following areas:

1. Disposal Areas Shown on Plans

   Check disposal areas shown on the Plans. They may or may not be adjacent to the Right-of-Way.

   When shown on the Plans, the Department will obtain Right-of-Way or easement to permit disposal of material. The Plans contain the amounts of royalties and the conditions for the acquiring of the waste easement.

   When the Department furnishes the waste areas, and the Engineer provides measurements of the area used, do the following:

   a. Promptly pay royalties to the owners of waste pits.

   b. Meet other conditions agreed to with the owners.

c. Submit to the Engineer a written statement signed by the owner stating that the owner has been paid in full and the agreed conditions, including proper draining and final clean-up, have been fulfilled to the owner's satisfaction before receiving final payment from the Department.

The Department will not make separate payment for these costs of acquisition.

If the property owner is not paid within 60 days after the Engineer has furnished the measurement, the Department may pay the property owner directly any amounts due, and deduct it from funds due the Contractor.

This provision does not affect the obligation of the Contractor under his bond or the rights of the property owner or the Department under the bond.

In case of dispute between the Contractor and the Department, the Chief Engineer will make the final and conclusive decision.

When disposal areas are shown on the Plans and are elected to be used, comply with the terms of the option before resorting to other areas.

2. Disposal Areas Not Shown on Plans

When waste disposal areas are not shown on the Plans, obtain suitable disposal areas at no expense to the Department.

Exercise the right to sell or otherwise dispose of the surplus material in these cases. (See Subsection 107.22 and Subsection 107.23.)

3. Reclamation

Reclaim disposal areas according to Section 160.

205.3 Construction Requirements

205.3.01 Personnel

General Provisions 101 through 150.

205.3.02 Equipment

General Provisions 101 through 150.

205.3.03 Preparation

General Provisions 101 through 150.

205.3.04 Fabrication

General Provisions 101 through 150.

205.3.05 Construction

Perform roadway excavation according to the Plans, and all of the requirements of this Subsection.

1. Provide adequate openings in spoil banks to allow the adjacent land surface to drain.
2. To carry water from the side hill, cut surface ditches at the top of cut slopes that extend to each end of the cuts.
3. Turn side ditches or gutters that empty from cuts to embankments outward to avoid embankment erosion.
4. Discharge water from surface ditches at terraces or in tail ditches cut along contour lines (wherever possible).
5. Provide outlets or flumes for roadway ditches where necessary according to the Plans.

   Surface ditches, outlets, and other such ditches will be paid for as "unclassified excavation."
6. Uniformly round the intersection of cut slopes with natural ground surfaces, including the beginning and end of cut slopes.
7. Bring cut slopes to the grade and cross-section shown on the Plans or established by the Engineer.
8. Finish to reasonably uniform surfaces acceptable for seeding and mulching operations.
9. Dispose of material from slides and overbreaks that occur before Final Acceptance as directed by the Engineer.

A. Constructing Serrated Slopes

Construct serrated slopes as follows:

1. Grade the backslope according to the Construction Detail.

   The pay line is the template line or the final staked cross- section slope line. The Department will not make additional measurement or payment for constructing serrated slopes.
2. Start the first serration (step) as designated on the Construction Detail. Ensure that it is level instead of parallel to the roadway grade.
3. Use the tilt-control blade bulldozer to cut steps in alternate directions.

B. Constructing Non-serrated Slopes

Construct non-serrated slopes by leaving the front and back slopes in a roughened condition to provide a seed bed for temporary or permanent grassing operations.

C. Erosion and Siltation Control

Take the measures necessary throughout the Project to control erosion and to prevent silting of rivers, streams, and impoundments. Construct drainage facilities and perform all other construction work that contributes to erosion and siltation control in conjunction with earthwork operations as required by Section 161.

D. Rock Excavation

Remove rock and dispose of it as shown on the Plans or as directed by the Engineer. Transition any flattening of a cut slope already begun when rock is encountered to ensure the cut has a pleasing appearance.

Use the presplitting technique to reduce overbreakage and to establish a free surface or shear plane in the rock along the cut periphery or proposed break lines.

- Presplit a periphery plane to the excavation depth before blasting within the plane.
- Conduct the presplitting process by drilling appropriately sized holes at intervals that will ensure a neat break, to the desired depth, along the plane of the proposed cut. Load and stem the holes with an appropriate light charge explosive, and detonate the explosives simultaneously.
- Allow an 18 in. (450 mm) offset in the slope to begin succeeding drilling operations when the depth of the cut is more than can be drilled from the top.

Create a relatively smooth shear plane as indicated in the Plans with localized irregularities that do not exceed 2 ft (600 mm) behind or 1 ft (300 mm) in front (roadway side) of the plane surface.

Do not presplit slopes flatter than 1:1.

1. Overbreakage

   Material that is excavated beyond or below the cross-section shown on the Plans or designated will be at the Contractor's expense, except unavoidable overbreakage in solid rock. The allowable overbreakage is a maximum of 2 ft (600 mm) below or outside the original template lines. Backfill to replace material removed below the limits specified at no expense to the Department.
2. Precautions

   See Use of Explosives in Subsection 107.12.
3. Rock and Boulders

   Handle rock and boulder excavation as follows:

   a. Excavate solid rock and boulders in the roadbed to at least 1 ft (300 mm) below the finished subgrade elevation and backfill the space to the correct grade with suitable subgrade material.
   b. Leave the side slopes of rock cuts with uniform faces whether or not the excavation is carried beyond the specified side slope.
   c. Remove loose rock on cut slopes immediately after blasting.

d. Place stones, broken rock, and boulders found within the construction limits and not required for other construction, into embankment slopes when possible.

4. Ensure that sloped surfaces conform to the typical section shown on the Plans or to natural cleavage planes compatible with the typical section. Leave sloped surfaces safe and natural looking.

E. Unsuitable Material Excavation

The Engineer may require unsuitable material be removed from its location.

1. Remove material and backfill with properly compacted approved material.
2. Undercut material to the depth shown on the Plans or established by the Engineer in cut areas where the material is not suitable for subgrades or shoulders. Backfill the area with suitable material.
3. Excavate unsuitable material in roadway cuts and dispose of the material as directed by the Engineer.

The Department will not designate the unsuitable material excavation as a separate Pay Item unless specifically designated on the Plans, but will pay for it as "Roadway Excavation—Unclassified."

F. Obliteration of Old Roads

Obliterate old roads or other areas by completing the following work as directed by the Engineer:

- Obliterate discontinued roads or other areas inside or outside the Project construction limits.
- Grade, scarify, plow, and harrow obliterated areas.

The Department will pay for excavation (other than that necessary for finishing and dressing) as "roadway excavation—unclassified." Follow this procedure to obliterate the road:

1. Fill old ditches and grade the roadway after the old road is no longer needed for traffic. Restore the original contour of the ground and produce a surface of naturally rounded slopes.
2. Use borrow required for the new roadway from fills in the old road (where feasible).
3. Place surplus and waste material from the new roadway in cuts in the old road (where feasible).
4. Break down and remove or bury old structures not required to maintain drainage flow. Remove and store material with salvage value, or use it in the new construction.
5. Scarify, harrow, and smooth the old surface. Re-grass disturbed areas or establish a vegetative cover according to Section 160 or Section 700 as applicable.

G. Surcharge Removal

Remove and properly dispose of materials placed as surcharge for consolidation or other purposes.

1. Waste the material removed or use it for other purposes as specified on the Plans or in the Special Provisions.
2. Provide other areas for disposal if adequate areas are not available for disposing of excess surcharge within the Right-of-Way.

H. Use of Select Materials

Conserve and use excavated materials suitable for subgrade, shoulder construction, plant topsoil, blanket for fill slopes, or other purposes as directed by the Engineer according to Subsection 104.06.

1. Reserve suitable material by either leaving it in its original position or stockpiling it as directed by the Engineer.
2. Haul select materials directly from the excavation area to the final placement area whenever possible. Do not stockpile materials unless specifically directed.

   The Department will again pay for "roadway excavation—unclassified," which includes necessary hauling and placement, when the material is removed from the stockpile.

I. Final Finishing of Roadway

After excavation has been completed use the following procedure to finish the roadway:

1. Shape the surface of the roadbed and slopes to reasonably true grade alignment and cross-section shown on the Plans or established by the Engineer. Finish according to Section 209.
2. Leave cut slope surfaces in rock reasonably uniform and remove loose overhanging rock.
3. Open all ditches, drains, and culverts constructed to effectively drain the roadway.

   The Department will make no separate payment for finishing done under this Section. Include the work in the cost of the roadway excavation.
4. Maintain the excavated areas until final acceptance of the Project.

205.3.06 Quality Acceptance

General Provisions 101 through 150.

205.3.07 Contractor Warranty and Maintenance

General Provisions 101 through 150.

205.4 Measurement

Original ground surface measurements will be obtained using conventional methods, photogrammetric means, or a combination of these methods. The Engineer will determine the method(s) and time when the measurements are to be taken for each Project.

The volume of Roadway Excavation-Unclassified, authorized and accepted by the Engineer, will be computed by the method of average end areas, or other acceptable means, using the original ground surface, the final ground surface, cross-section, or approved templates.

The final ground surface will be obtained from conventional field measurements, as-built templates, photogrammetric means, or a combination of these methods. The Engineer will determine the method(s) to be used on each Project.

The measurement will include:

- Overbreakage and slides in roadway excavation, unless they are caused by Contractor negligence
- Authorized excavation of rock or unsuitable material below template grade
- Material re-excavated from stockpiles and used in construction as directed by the Engineer
- Surcharge removal

Excavation outside of staked lines and slopes will never be measured for payment unless ordered or approved by the Engineer.

Ditch excavation will be measured as specified in paragraph one, above.

Retaining wall construction will be measured to the back and bottom of the select material backfill or footing as the Engineer determines. Any exception outside these lines by the Grading Contractor to provide stable slopes and positive drainage will not be measured and will be considered incidental to the work.

Filling or plugging abandoned wells will not be measured for payment but all costs shall be included in the price bid for Roadway Excavation when Item 205 is shown as a pay item. Otherwise all costs shall be included in the overall contract bid price.

Removing paving, aggregates, and ballasts will be measured and included in the computations for roadway excavation when Section 205 is shown as a pay item (unless those items are shown in the Plans as a separate pay item).

205.4.01 Limits

General Provisions 101 through 150.

205.5 Payment

Removing paving, aggregates, and ballast will be paid for at the Contract Price bid per cubic yard (meter) when Item 205 is shown as a Pay Item, unless the items are shown in the Plans as a separate Pay Item.

The Department will withhold a percentage of the progress payments for the estimated quantity of earthwork (not to exceed 5 percent) until final dressing, subgrade construction, and satisfactory disposal of unsuitable or surplus materials is completed. This percentage withheld shall be in addition to that specified in Subsection 109.07.

- The Contract Price per cubic yard (meter) for "roadway excavation—unclassified" will be paid for quantities of excavation Excavating, hauling, placing, and compacting excavated material.
- Removing, loading, hauling, stockpiling as designated, and sawing pavement when payment is included under Item 205.
- Pre-splitting rock, disposing of unsuitable or surplus materials, excavating, shaping, disposing of unsatisfactory excavated materials, maintaining ditches (except channel excavation specified in Section 204), constructing subgrades and shoulders, and finishing, dressing, and maintaining the work until Final Acceptance.

Payment will be made under:

Item No. 205	Unclassified excavation	Per cubic yard (meter)

205.5.01 Adjustments

General Provisions 101 through 150.

Section 206—Borrow Excavation

206.1 General Description

This work includes:

- Excavating material from borrow areas or pits outside the Project Right-of-Way
- Hauling and using the material as required on the Plans or directed by the Engineer
- Stripping, excavating, and disposing of unsuitable material from borrow areas. See Subsection 107.22 and Subsection 107.23

206.1.01 Definitions

General Provisions 101 through 150.

206.1.02 Related References

A. Standard Specifications

Section 106—Control of Materials

Section 107—Legal Regulations and Responsibility to the Public

Section 160—Reclamation of Material Pits and Waste Areas

Section 201—Clearing and Grubbing Right-of-Way

Section 202—Random Clearing and Grubbing

Section 208—Embankments

Section 209—Subgrade Construction

B. Referenced Documents

Section 106 of the National Historical Preservation Act

206.1.03 Submittals

The Engineer's approval of borrow pits will be subject to the requirements of Section 106 of the National Historical Preservation Act being fulfilled.

Give the Engineer sufficient notice to perform necessary investigations, measurements, staking, and actions required in Subsection 206.3.05.A.

Working in the pit before receiving the following approvals may result in rejection of the borrow pit without payment:

- Approval for environmental considerations and material acceptability
- Approval from pit investigation, cross sectioning, and staking

206.2 Materials

Perform work using embankment materials that meet the requirements in Section 208. Do not use material that contains roots or stumps. The Engineer will approve borrow excavation materials.

Use selected borrow of Class IIB3 or better when specified for subgrade construction or other uses (unless otherwise stated in the Plans or the Proposal).

206.2.01 Delivery, Storage, and Handling

Before obtaining material from borrow areas, use material to construct the embankment that is excavated from within the slope stakes, or stockpile the material for topping out the roadbed (unless otherwise directed by the Engineer).

206.3 Construction Requirements

206.3.01 Personnel

General Provisions 101 through 150.

206.3.02 Equipment

Ensure that equipment and methods used in borrow pits produce the following results:

- Various strata, pockets, or accumulations of different types of material are excavated and used in the correct proportions and sequence.
- Material is used to produce borrow or selected borrow with the best possible gradation and stability within the specified range.
- Material is excavated uniformly to facilitate measurement.

206.3.03 Preparation

General Provisions 101 through 150.

206.3.04 Fabrication

General Provisions 101 through 150.

206.3.05 Construction

A. General

The Department will investigate and take necessary actions to satisfy requirements of Section 106 of the National Historical Preservation Act.

B. Clearing and Grubbing

Clear and grub borrow pits as necessary before removing borrow material as specified in Section 106 and Section 202.

C. Draining Pits

Prevent water from standing in the pits unless the Engineer determines not to drain the pit.

Leave slopes presentable. Machine slope the bottom of the excavated area to smooth the surfaces suitable for revegetation.

The Department will not measure for payment ditch excavation for draining borrow pits. The bid price for borrow excavation shall include this work.

D. Disposing of Waste Material

Dispose of material unsuitable for embankments such as stone, broken rock, boulders, and other material found in the borrow pits.

1. Dispose of the material in a manner satisfactory to the Engineer and at no expense to the Department.
2. Do not leave piles of unsightly material in pits with or without the consent of the property owner.
3. Dispose of waste materials according to Subsection 201.3.05.E.

E. Reclamation

Leave borrow pits or waste disposal areas presentable. Reclaim them according to Section 160 unless exempted by Subsection 160.1.

Develop boundary slopes of reclaimed areas and grade them to 3:1 slopes or flatter.

206.3.06 Quality Acceptance

General Provisions 101 through 150.

206.3.07 Contractor Warranty and Maintenance

General Provisions 101 through 150.

206.4 Measurement

The quantity of borrow and selected borrow is measured in its original position by the method of average end areas or other acceptable means.

When designated in the Plans, selected borrow may be measured by volume of the hauling vehicle according to Section 109.

The following will have no payment:

- Material excavated before the original surface of the pit is obtained by the Engineer
- Materials excavated for maintaining the work
- Materials excavated that run out of the embankment on a flatter slope than indicated on the cross-section shown on the Plans or established by the Engineer
- Unsuitable material excavated from the borrow area and not used on the roadway

The Department will measure original and final ground surfaces by conventional field or photogrammetric or other methods, as determined by the Engineer.

206.4.01 Limits

General Provisions 101 through 150.

206.5 Payment

The provisions of Section 106 apply to borrow pits. The Department will not pay for the following:

- Delays caused by fulfilling the requirements of Section 106 or costs involved if the borrow pit is rejected
- Work done to provide or improve access or haul roads to borrow pits (except when specifically stated in the Proposal)

The prices bid for borrow excavation shall include this cost.

The quantities of borrow and selected borrow are measured as described in Subsection 206.4 and will be paid for at the Contract Price per cubic yard (meter). This is full compensation for excavating, hauling, placing, and compacting the material according to the Plans and Specifications and for draining and dressing the borrow area.

Borrow material furnished at no cost (no royalty) to the Contractor is “borrow excavation.”

If royalties must be paid for material shown on the Plans as a possible source of borrow, or if the source of borrow must be furnished, the Bid Item is “borrow excavation including material.”

The same criteria applies to selected borrow.

Payment will be made under:

Item No. 206	Borrow excavation	Per cubic yard (meter)
Item No. 206	Borrow excavation, including material	Per cubic yard (meter)
Item No. 206	Selected borrow excavation	Per cubic yard (meter)
Item No. 206	Selected borrow excavation, including material	Per cubic yard (meter)

206.5.01 Adjustments

General Provisions 101 through 150.

Section 207—Excavation and Backfill for Minor Structures

207.1 General Description

This work includes excavating, backfilling, or disposing of materials required to install a bridge culvert, box culvert, pipe, arch culvert, headwall and retaining wall according to the Specifications, the Plans, and the Engineer.

207.1.01 Definitions

General Provisions 101 through 150.

207.1.02 Related References

A. Standard Specifications

Section 104—Scope of Work

Section 109—Measurement and Payment

Section 205—Roadway Excavation

Section 206—Borrow Excavation

Section 208—Embankments

Section 810—Roadway Materials

Section 812—Backfill Materials

B. Referenced Documents

GDT 7

207.1.03 Submittals

General Provisions 101 through 150.

207.2 Materials

Ensure that materials meet the requirements of the following Specifications:

Material	Section
Foundation Backfill Material—Type I	Subsection 812.2.01
Foundation Backfill Material—Type II	Subsection 812.2.02
Imperfect Trench Backfill Material—Type III	Subsection 812.2.03

207.2.01 Delivery, Storage, and Handling

General Provisions 101 through 150.

207.3 Construction Requirements

207.3.01 Personnel

General Provisions 101 through 150.

207.3.02 Equipment

General Provisions 101 through 150.

207.3.03 Preparation

General Provisions 101 through 150.

207.3.04 Fabrication

General Provisions 101 through 150.

207.3.05 Construction

A. Locations and Elevations

The Engineer will determine final locations and elevations of the structure. The locations and elevations shown on the Plans are approximate.

B. Excavation

The Engineer will determine the minimum requirements for length and depth of excavation for each structure. Assume the responsibility for the cost of installing necessary sheeting and bracing.

When excavating, follow these requirements:

- Excavate through rock or boulder formations to at least 1 ft (300 mm) below the bottom of the structure, except for where the entire concrete or masonry structure rests on solid rock.
- Backfill with Type I or Type II material to the proper subgrade elevation.
- As the embankment is constructed, excavate and place pipe on the new embankment. Pipe may be placed incrementally on steep gradients.
- Cut surfaces at structure trenches to prevent damage to the adjacent pavement when existing paved areas will be retained.
- Saw pavements deep enough to cause the edges to break in straight lines.
- Ensure that the width, depth, and vertical walls of an excavated imperfect trench conform to Plan details and dimensions within 2 in (50 mm).
- Dispose of surplus and unsuitable materials as directed by the Engineer.
- Consider excavated material as unclassified excavation according to Section 205, except that the Department will not pay for excavation for minor structures.
- Include the cost of fulfilling these requirements in the price bid for the pipe.

C. Backfill

Obtain backfill materials that meet the Specifications from sources approved by the Engineer.

1. Foundation Backfill Materials, Types I and II

   Use the following materials as shown on the Plans or as directed by the Engineer:

   a. Use Type I material in dry structure trenches and Type II material in wet trenches.

   b. Use Type I material as a finishing course for Type II material when permitted by the Engineer.

   c. Backfill excavations beyond the specified limits with the same type of material required for the adjacent area; however, the Department will not measure excess backfill material for payment.

   d. Place Type I and Type II backfill material in layers of no more than 6 in (150 mm) loose.

   e. Compact each layer as follows:

      1) Type I Backfill Material: Compact to 95 percent of the theoretical dry density determined by GDT 7.

      2) Type II Backfill Material: Compact to a satisfactory uniform density as directed by the Engineer.

2. Imperfect Trench Backfill Material, Type III

   Place this material as loose uncompacted backfill over pipe structures as shown on the Plans where imperfect trench backfill is specified.

3. Normal Backfill

   Ensure that normal backfill material meets the requirements of Subsection 810.2.01, Class I or II. Class IIIC1 material may be used in Districts 6 and 7. Place and compact according to Section 208 except as follows:

   a. Do not place rock more than 4 inches (100 mm) in diameter within 2 ft (600 mm) of any drainage structure.

   b. For backfill behind retaining walls, use a pervious material that meets the requirements of Case I or Case II as follows:

      1) Case I. Case I refers to backfills for retaining walls that support roadbeds and parking areas.

         Ensure that the backfill conforms to Section 208. Do not place rock more than 4 in (100 mm) in diameter within 2 ft (600 mm) of the retaining wall or finished surface.

      2) Case II. Case II refers to backfills for retaining walls that do not support roadbeds or parking areas.

         Ensure that the backfill conforms to the requirements of Case I above, except compact the backfill to the density of the adjacent soil.

D. Pavement Replaced

Replace pavement removed at structure trenches in kind where adjacent pavements will be retained. An equal or better material may be used when approved by the Engineer.

Backfill and maintain a smooth riding surface until repaving is complete.

207.3.06 Quality Acceptance

General Provisions 101 through 150.

207.3.07 Contractor Warranty and Maintenance

General Provisions 101 through 150.

207.4 Measurement

A. Excavation

The following considerations are not measured for payment:

- Excavation for minor structures, including undercut for backfill materials as shown on the Plans

- Excavation for an imperfect trench which is required at locations specified in the Plans but which is not measured for payment
- Removal of water
- Removal of material from any area required to be reexcavated
- Excavation and backfill of temporary drainage ditches

B. Extra Depth Excavation

The following extra depth excavations are not measured for payment:

1. Extra depth excavation because of Contractor negligence
2. Extra depth excavation (required by the Engineer) below the original Plan elevation of the bottom of the footing or the flow line of a culvert pipe that does not exceed 3 ft (1 m)

If the Engineer relocates the structure or orders the elevation of the bottom of the footing or the flow line of the pipe to be lowered or undercut more than 3 ft (1 m), the Contractor will be compensated for the extra depth excavated below the 3 ft (1 m) limit according to Subsection 104.04 and Subsection 109.05.

Calculate the width of extra depth excavation using the diameter of the pipe or the width of the footing plus 2 ft (600 mm).

The length of extra depth excavation is equal to the length of that portion of the structure that is lowered more than 3 ft (1 m) below Plan elevation.

C. Backfill Materials Types I, II, and III

1. Types I and II

   These materials (in place and accepted) are measured in cubic yards (meters) compacted.

   Lateral measurements are confined to an area bounded by vertical planes lying not more than 1 ft (300 mm) outside of and parallel to the limits of the structure.

   Length and depth measurements are confined to the dimensions of compacted material in place as specified by the Engineer. Materials placed outside the above limitations are not measured for payment.

2. Type III

   The Department measures Type III material (complete, in place, and accepted) in cubic yards (meters).

   Lateral measurements of Type III material are confined to an area bounded by vertical planes lying directly above the outside walls of the structure.

   Longitudinal measurements are confined to the length of treatment installed as specified. Measurements of depth are the dimensions shown on the Plans or as directed.

D. Normal Backfill

This Item is not measured separately, but is included in the measurement of the Items of excavation from which normal backfill materials are obtained.

207.4.01 Limits

General Provisions 101 through 150.

207.5 Payment

A. Excavation for Minor Structures

This Item will not be paid for separately except as provided in Subsection 207.4.B.

B. Sheeting and Bracing

Sheeting and bracing will not be paid for separately unless these materials are left in place at the written direction of the Engineer. In this case, the Contractor will be paid at invoice cost plus 10 percent.

C. Backfill Materials

Backfill material Type I, (measured as shown in Subsection 207.4.C.1) will be paid for according to Section 205 or Section 206.

The Department will pay for Types II and III separately at the Contract Unit Price per cubic yard (meter). This payment is full compensation for furnishing the materials from sources inside or outside the right-of-way, loading, unloading, hauling, handling, placing, and compacting the material.

D. Normal Backfill

This Item will not be paid for directly but will be paid at the Unit Price for the applicable excavation item from which the normal backfill materials are obtained.

Payment will be made under:

Item No. 207	Foundation backfill material, type II	Per cubic yard (meter)
Item No. 207	Imperfect trench backfill material, type III	Per cubic yard (meter)

207.5.01 Adjustments

General Provisions 101 through 150.

Section 208—Embankments

208.1 General Description

This work includes placing embankments, backfilling structures, and constructing earth berms and surcharges with suitable material excavated under Section 204, Section 205, Section 206, and Section 207.

Complete the work according to the lines, grades, and typical cross- sections shown on the Plans or established by the Engineer.

The work also includes preparing areas by backfilling stump holes and correcting surface irregularities where the embankment is to be constructed. This includes forming, compacting, and maintaining the embankment and placing and compacting approved material where unsuitable material has been removed.

Payment for this work is included in other appropriate Pay Items unless a specific Pay Item is set up in the Contract.

Apply all provisions of Section 161 to the work in this Section.

Perform Shoulder Construction according to Section 216.

208.1.01 Definitions

General Provisions 101 through 150.

208.1.02 Related References

A. Standard Specifications

Section 161—Control of Soil Erosion and Sedimentation

Section 201—Clearing and Grubbing Right-of-Way

Section 204—Channel Excavation

Section 205—Roadway Excavation

Section 206—Borrow Excavation

Section 207—Excavation and Backfill for Minor Structures

Section 209—Subgrade Construction

Section 216—Unpaved Shoulders

Section 810—Roadway Materials

Section 811—Rock Embankment

Section 813—Pond Sand

B. Referenced Documents

GDT 7

GDT 20

GDT 21

GDT 24a

GDT 24b

GDT 59

GDT 67

208.1.03 Submittals

General Provisions 101 through 150.

208.2 Materials

Embankment material classes are defined in Section 810, Section 811, and Section 813. The material incorporated into the roadway will be subject to the following limitations:

A. Embankment Material

Use embankment material classified as Class I, II, III, V, or VI except as noted below:

1. Inundated Embankments

   A Special Provision in the Proposal will contain required gradation and other characteristics of materials for constructing embankments through reservoirs.

2. Intermittently Inundated Embankments

   Build intermittently inundated embankments using any material suitable for embankment.

3. Embankments at Structures

   Use Class I or II embankment materials within 10 ft (3 m) of any bridge structure. Class IIIC1 material may be used in Districts 6 and 7. Class IIIC2 or IIIC3 material may only be used in Districts 6 and 7 if approved by the Office of Materials, Geotechnical Engineering Bureau. Ensure that materials do not contain rock larger than 3 in (75 mm) for any dimensions.

B. Rock Embankment

Ensure that rock embankment placed as indicated on the Plans meets the requirements of Section 811 unless specified otherwise in the Plans or in the Special Provisions.

C. In-Place Embankment

Construct in-place embankment with Class I, II, III, V, or VI material.

D. Backfill Material

Use Class I or Class II backfill material furnished and stockpiled as defined in Subsection 810.2.01.A. Class IIIC1 material may be used in Districts 6 and 7. Class IIIC2 or IIIC3 material may only be used in Districts 6 and 7 if approved by the Office of Materials, Geotechnical Engineering Bureau.

E. Pond Sand Embankment

Use pond sand that meets the requirements of Section 813 as embankment material. Material is subject to the following approval limitations:

1. Pond sand will be approved on a stockpile basis only.
2. Pond Sand will not be approved for Type I or normal backfill materials or for backfill for mechanically stabilized walls.
3. Pond sand shall be encapsulated, when used as fill, with 2 ft (600 mm) of soil on the slopes and 3 ft (1 m) of soil on top.
4. Pond sand shall not be used on sidehill fills or fill widenings where any of the following conditions exist:
   a. The proposed fill slope is steeper than 2:1.
   b. The thickness of the proposed fill at its thinnest point, as measured perpendicularly from the new fill line to the existing ground slope/fill slope, is less than 7 ft (2.1 m), including 2 ft (600 mm) of soil cover.
   c. The fill height exceeds 30 ft (9 m).

208.2.01 Delivery, Storage, and Handling

General Provisions 101 through 150.

208.3 Construction Requirements

208.3.01 Personnel

General Provisions 101 through 150.

208.3.02 Equipment

General Provisions 101 through 150.

208.3.03 Preparation

General Provisions 101 through 150.

208.3.04 Fabrication

General Provisions 101 through 150.

208.3.05 Construction

A. Benching Excavation for Embankment

This work includes excavating material forming benches in the existing ground beneath proposed embankments. Form benches to increase the bond between the existing ground and the proposed embankment.

This work is required where embankments are placed on hillsides or against existing embankments, which will be indicated on the Plans.

Construct the benches approximately 12 ft (3.7 m) wide unless otherwise shown on the Plans. Use material removed in the excavation in the embankments. The Department will make no additional payment for this work.

B. Embankments

Follow these requirements when constructing embankments:

1. Preparation for Embankments

   Before starting embankment construction, clear and grub the embankment area according to Section 201 and install Drainage Structures according to Section 550.

   a. Depressions and Undercut Areas

      Fill depressions below the ground surface and undercut areas with suitable material. Remove unsuitable or unstable material and compact according to Subsection 208.3.05.B.1.c before beginning embankment construction.

   b. Scarification and Other Preparation

      Plow and scarify the entire area upon which the embankment is to be placed (except inundated areas) at least 6 in (150 mm) deep.

      Before placing the embankment, recompact loosened soil to the approximate density of the underlying soil. Cut benches as specified in Subsection 208.3.05.A.

   c. Compaction Under Shallow Fills

      When the depth of fill and surfacing is 3 ft (1 m) or less, compact the original ground compact at least 1 ft (300 mm) deep to at least 95 percent of the maximum laboratory dry density as determined from representative samples of the compacted material using, GDT 7, GDT 24a, GDT 24b, or GDT 67whichever applies.

      The in-place density of the compacted fill will be determined according to GDT 20, GDT 21, or GDT 59, whichever applies.

   d. Embankments Over Existing Roads, Parking Areas, and Floors

      Thoroughly plow or scarify all portions of existing unpaved roads and flexible pavements. Destroy cleavage planes before placing the embankment.

      1) Remove the old pavement with rigid surfaces if the new embankment is not more than 3 ft (1 m) high.

      2) Break remaining rigid pavements that are within 10 ft (3 m) of the finished grade so that no section larger than 10 ft^2 (1 m^2) remains intact.

2. Embankment Formation

   Use the following requirements when constructing the embankment formation:

   a. Layer Construction

      Except as noted in Subsection 208.3.05.B.2.d, construct the embankments in parallel layers. Deposit the material and spread in horizontal layers not more than 8 in (200 mm) thick, loose measurement, for the full width of the cross-section. Use motor graders, bulldozers, or other approved equipment to keep layers uniform. Compact the layers using a sheepsfoot roller. The Engineer may permit the use of vibratory rollers whenever the embankment soils consist of Class IA1, IA2, or IA3 materials.

   b. Moisture Content

      Compact each layer within the range of optimum moisture content to achieve the compaction specified below.

      Do not construct successive layers on previous layers that exhibit excessive pumping under construction equipment regardless of compaction.

      Dry material if it contains too much moisture. Ensure the moisture content is sufficient for stability and compaction.

      Add water if the material is too dry and uniformly mix it with the soil for stability and compaction. The Department will not measure water added to the material under this requirement for payment. It is considered incidental to the satisfactory completion of the work.

   c. Degree of Compaction

Compact the embankment at bridge structures to at least 100 percent of the maximum laboratory dry density. Compact for the full depth of the embankment, beginning at the toe of the slope and extending 100 ft (30 m) from the end of the bridge.

Compact embankment other than at bridge structures to at least 95 percent of the maximum laboratory dry density to within 1 ft (300 mm) of the top of the embankment. Compact the top 1 ft (300 mm) of the embankment to at least 100 percent of the maximum laboratory dry density.

If grading and paving are let in separate contracts, the paving Contractor shall recompact the top 6 in (150 mm) to at least 100 percent of the maximum laboratory density.

The maximum laboratory dry density will be determined from representative samples of the compacted material using GDT 7, GDT 24a, GDT 24b, or GDT 67, whichever applies. The in-place density of the compacted fill will be determined according to GDT 20, GDT 21, or GDT 59, whichever is applicable.

d. Special Conditions

Follow these special requirements:

1) Build layers as parallel as possible. In certain cases the Engineer may permit steeper slopes at ends of the embankments.

2) In swamp or inundated areas that will not support the equipment, build the lower part of the fill by dumping successive loads in layers no thicker than necessary to support the hauling equipment.

3) Build and compact the remainder of fills in layers as specified above.

e. Embankments at Structures

Use Class I or II material when constructing embankments over and around pipes, culverts, arches, and bridges according to Subsection 810.2.01.A.1. Class IIIC1 material may be used in Districts 6 and 7.

1) Compact the material as specified in Subsection 208.3.05.B.2.c.

2) Place the specified material on both sides of bridge structures for a distance of at least 10 ft (3 m).

NOTE: Do not place rock larger than 4 in (100 mm) diameter within 2 ft (600 mm) of any drainage structure.

Before any traffic is allowed over any structure, provide a sufficient depth of material over and around the structure to protect it from damage or displacement.

f. Method of Handling Classes of Soils

Handle the different classes of soils using the following methods:

1) Class IIB3and Better Soils

Distribute and compact these soils in 8 in (200 mm) uniform layers over the entire width of the embankment. Use these soils (when available in sufficient quantities) in the top 1 ft (300 mm) of the roadbed. Reserve these soils for this purpose when directed by the Engineer.

2) Class IIB4 Soils

Distribute and compact these soils in 8 in (200 mm) layers over the entire width of the embankment. If Class IIB3 or better soils are available in borrow pits, use these soils in the top 12 inch (300 mm) of subgrade. Class IIB4 soils may be used in the top 12 inch (300 mm) of subgrade if approved by the Office of Materials, Geotechnical Engineering Bureau.

3) Class III Soils

Class IIIC1 soils may be used in Districts 6 and 7 within the top 12 inch (300 mm) of subgrade if approved by the Office of Materials, Geotechnical Engineering Bureau. Do not use Class IIIC2, IIIC3 or IIIC4 soils within the top 12 inch (300 mm) of subgrade unless a stabilizing agent approved by the Engineer is added, or if approved by the Office of Materials, Geotechnical Engineering Bureau. Class IIIC4, chert clay soils in District 6 with less than 55 percent passing the No. 10 (2 mm) sieve may be used for subgrade.

4) Class IV Soils

Do not use these soils in embankments. Waste these soils or (when designated in the Plans or directed by the Engineer) stockpile them and use them for blanketing fill slopes.

5) Class V Soils

Place these soils in the same manner as Class IIB4 soils. Pulverize large particles to obtain the proper compaction.

6) Class VI Rock

Place rock in uniform layers not over 3 ft (1 m) thick and distribute it over the embankments to avoid pockets. Fill voids with finer material.

Do not place rock larger than 6 in (150 mm) in diameter within 3 ft (1 m) of the finished surface of the embankment.

Do not place rock larger than 6 in (150 mm) in diameter within 2 ft (600 mm) of the outer limits of proposed posts or utility poles.

Do not place rock at bridge end bents within 10 ft (3 m) of pile locations.

7) All Classes

Place mixtures of the above classes together with random material such as rock, gravel, sand, cinders, slag, and broken-up pavement so that coarse particles are dumped near the outer slopes and finer particles near the center of the roadway.

Produce a gradual transition from the center to the outside. If material is too large to place in 8 in (200 mm) layers, treat it as rock or break it down and place it in 8 in (200 mm) layers.

3. Embankment Consolidation at Bridge Ends

When consolidating embankments at bridge ends, use the following specifications:

a. When a waiting period is required in the Plans or by Special Provision, place end fills at bridges in time for consolidation readings to indicate that both the fill and the natural ground have reached the desired degree of stability.

b. Delay constructing bridge portions during the period of consolidation as shown on the Plans or as required by a Special Provision.

The Plans or the Special Provisions will indicate the estimated time required to reach consolidation.

The Engineer may extend or shorten this waiting period based on settlement readings taken on points placed in the fills. The longer or shorter waiting period will not constitute a valid claim for additional compensation.

Follow these specifications when extending a waiting period:

1) Extending an estimated waiting period may lead to increasing the Contract time. If the Contract is on a calendar day or completion date basis, the Department may increase the calendar days equal to the maximum number of calendar days involved in the extension.

2) When a time extension causes additional delay due to seasonal changes, the Engineer may recompute the time extension on an available day basis.

When the Contract is on an available day basis, the time increase will be equal to the greatest number of available days involved in the extension.

3) When time charges on separate Bridge Contracts are controlled by Special Provisions that set forth the availability of bridge sites, extending an estimated waiting period controls the availability of that bridge site only; time charges will be adjusted according to the Special Provision.

c. Construct the embankment at bridge ends full-depth to the subgrade template (except for the stage construction providing a bench for the end bent) unless otherwise stated in the Plans and compact thoroughly before driving a piling at bridge ends.

The minimum acceptable length of completed full-depth embankment is equal to the maximum width of fill between slope stakes at the end of the bridge. The Department will measure the minimum length of full-depth embankment along the roadway centerline away from the end-of-bridge Station.

C. In-Place Embankment

Construct embankments designated on the Plans and in the Proposal as "In-Place Embankment" using either a hydraulic or conventional dry land construction method and using materials obtained from within the construction limits of the Right-of -Way or from borrow pits, whichever is appropriate.

Regardless of the method of construction, the Department will measure the entire embankment for payment as in-place embankment.

1. Construction
   - Build embankments according to this Section when hydraulic or conventional dry land construction methods are used.
   - Furnish equipment suitable for the method chosen to complete the work. Equipment is subject to the Engineer's approval.
   - When using a hydraulic method is used, conform to these additional requirements:
     a. Using baffles for construction is permitted as long as the embankment slopes are not steeper than indicated on the Plans.
     b. Use of excess material placed outside the prescribed slopes to raise the fill is permitted.
     c. Leave openings in the embankments at the bridge site as indicated on the Plans.

        Dredge material that invades the openings or existing channels at no additional expense to the Department. Provide the same depth of channel at mean low water as existed before the construction of the embankment.
     d. Do not excavate or dredge material within 500 ft (150 m) of the toe of the embankment or existing structures, unless otherwise shown on the Plans.
     e. Place in-place embankment in areas previously excavated below the ground line in a uniform mass beginning at one end of the excavated area and continuing to the other end of the operation. Avoid forming of muck cores in the embankment.
     f. Construct the embankment at the farthest points along the roadway from the bridge ends and progress to the end of the excavation area beyond the toe of the slope of endrolls at bridge ends.
     g. Remove timber used for temporary bulkheads or baffles from the embankment.
     h. Fill and thoroughly compact the holes.
2. Maintenance
   a. Maintain the embankment at grade until it has been completed and accepted. Assume responsibility for slides, washouts, settlement, subsidence, or mishaps to the work while under construction.
   b. Keep constructed embankment stable and replace displaced portions before Final Acceptance of the entire Contract.
   c. Remove and dispose of excess materials, including fill, detours, and erosion deposits placed outside the prescribed slopes in wetland areas.
3. Permits

   Obtain (at no additional expense to the Department) necessary permits or licenses from the appropriate authorities to operate dredges and other floating equipment in waters under their jurisdiction, unless otherwise provided for in the Contract.
4. Erosion Control

In addition to the provisions of Section 161, follow additional erosion, siltation, and pollution control measures specified in the Plans or Special Provisions.

D. Rock Embankment

This work includes furnishing materials either from the roadway excavation or other sources and hauling and the placing of rock embankment. Use materials that meet the requirements of Subsection 208.2.B, as shown on the Plans or directed by the Engineer.

1. Place the rock in uniform layers not over 3 ft (1 m) thick. Distribute rock over the embankment to avoid pockets.
2. Fill voids with rock fines. Do not use rock larger than 6 in (150 mm) for any diameter within 3 ft (1 m) of the finished grade of the embankment, or within 2 ft (600 m) of any structure.
3. Do not place rock at bridge end bents within 10 ft (3 m) of pile locations. Construct rock embankment and adjoining earth embankment concurrently. Ensure that neither is larger than 4 ft (1.2 m) higher than the other at any time.

E. Final Finishing

After constructing the entire embankment, shape the surface of the roadbed and the slopes to reasonably true grade and cross-sections as shown on the Plans or established by the Engineer.

Open ditches, channels, and drainage structures (both existing and those constructed or extended) to effectively drain the roadway. Maintain the embankment areas until Final Acceptance of the Project.

208.3.06 Quality Acceptance

General Provisions 101 through 150.

208.3.07 Contractor Warranty and Maintenance

General Provisions 101 through 150.

208.4 Measurement

The following section details measurement for payment for the work described in this Section:

A. Except as provided herein, there will be no measurement for payment for the work covered by this Section.

B. The Department will compute the quantity of in-place embankment or rock embankment using the average end area method, or other acceptable methods, when embankment is in place and accepted.

The quantity will be calculated as the neat volume, above the original ground surface, between the template line shown on the Plans or authorized changes by the Engineer, and the original ground surface.

The original ground surface is determined by conventional field, photogrammetric, or other methods. The Department will not deduct for the volume of culverts and manholes.

In-place embankment necessary for the construction of temporary detours will not be measured for payment and is considered incidental to the completion of the work unless specifically stated otherwise on the Plans.

Where work includes excavating of unstable materials below the ground line, the volume of embankment required for backfill below the ground line is calculated based on the neat line measurement for the cross-section shown on the Plans or established by the Engineer by the average end area method or other acceptable methods.

Where permitted by the Engineer or required by the Plans, material removed from the existing roadbed, special ditches, berm ditches, or dry land borrow pits and used in making embankment will be paid for as in-place embankment regardless of the method of excavation.

208.4.01 Limits

General Provisions 101 through 150.

208.5 Payment

Except as provided for herein, the Department will not make separate payment for placing embankments, backfilling structures, and constructing earth berms, including surcharges.

Payment will be included at the Contract Unit Price for the items covered by Section 204, Section 205, and Section 206. Prices are full compensation for The Work covered by this Section.

The Unit Prices bid per cubic yard (meter) for in-place and rock embankments (when included as Contract bid Items) are full compensation for furnishing suitable material, hauling, placing, compacting, finishing, and dressing according to these Specifications or as directed by the Engineer.

Payment will be made under:

Item No. 208	In-place embankment	Per cubic yard (meter)
Item No. 208	Rock embankment	Per cubic yard (meter)

208.5.01 Adjustments

General Provisions 101 through 150.

Section 209—Subgrade Construction

209.1 General Description

This work includes placing, mixing, compacting, and shaping the top 6 in (150 mm) or the Plan-indicated thickness of the roadbed in both excavation and embankment areas.

This work also includes subgrade stabilization, select material subgrade, and shoulder stabilization.

209.1.01 Definitions

General Provisions 101 through 150.

209.1.02 Related References

A. Standard Specifications

Section 109—Measurement and Payment

Section 412—Bituminous Prime

Section 803—Stabilizer Aggregate

Section 810—Roadway Materials

Section 815—Graded Aggregate

B. Referenced Documents

GDT 7

GDT 20

GDT 21

GDT 24a

GDT 24b

GDT 59

GDT 67

209.1.03 Submittals

General Provisions 101 through 150.

209.2 Materials

A. Subgrade Materials

If the Plans do not show the source of material for subgrade, the Engineer will direct the Contractor according to the Specifications, or implement a Supplemental Agreement to ensure a satisfactory subgrade.

If the existing roadway excavation or borrow materials are not suitable or available for stabilizing the subgrade, use the quantity of stabilizer materials defined below in Subsection 209.2.B.

B. Subgrade Stabilizer Materials

Material	Section
Type I Stabilizer Aggregate	803.2.01
Type II Stabilizer Aggregate	803.2.02
Class IIB3 or Better Soil	810.2.01.A.1
Type III Stabilizer Aggregate	803.2.03
Type IV Stabilizer Sand	803.2.04

C. Select Material Subgrade

Material	Section
Class IIB3 or Better Soil	810.2.01.A.1
Graded Aggregate	815

D. Shoulder Stabilization

Material	Section
Shoulder Stabilization	803.2.02, Type II

209.2.01 Delivery, Storage, and Handling

General Provisions 101 through 150.

209.3 Construction Requirements

209.3.01 Personnel

General Provisions 101 through 150.

209.3.02 Equipment

General Provisions 101 through 150.

209.3.03 Preparation

General Provisions 101 through 150.

209.3.04 Fabrication

General Provisions 101 through 150.

209.3.05 Construction

A. Subgrade Construction

Construct subgrade as follows:

1. Plow, harrow, and mix the entire surface of the in-place subgrade to a depth of at least 6 in (150 mm).
2. After thoroughly mixing the material, bring the subgrade to Plan line and grade and compact it to 100 percent of the maximum laboratory dry density.
3. If the subgrade needs to be stabilized, or if a subsequent contract provides for base construction, do not apply density requirement at this stage.

   If a subsequent Contract provides for base construction, eliminate mixing and compact the in-place subgrade to 95 percent of the laboratory maximum dry density.
4. Ensure that the subgrade can firmly support construction equipment before placing subsequent layers of base and paving materials. The subgrade must support construction equipment without excessive movement regardless of compaction.
5. Rework unstable areas of subgrade to a moisture content that will provide stability and compaction. The Engineer may direct the Contractor to proof roll the subgrade with a loaded dump truck.
6. Compact the subgrade using a sheepsfoot roller.

   The Engineer may permit the use of vibratory rollers whenever the subgrade soils consist of Class Ia1, IA2, or IA3 materials.
7. Ensure that subgrade material used underneath soil-cement base meets the requirements of Subsection 301.3.03.A.

B. Subgrade Stabilization

Construct a stabilized subgrade according to Plans or as directed:

1. Undercut and dispose of the amount of subgrade material that will be displaced with the aggregate or selected material according to the Engineer's direction.
2. Leave material off the subgrade in fill sections requiring stabilization.
3. Place the amount of material specified in Subsection 209.2.B. on the subgrade as specified on the Plans or established by the Engineer.
4. Thoroughly incorporate the material into the existing subgrade to a depth of 6 in (150 mm), or as indicated on the Plans. Plow, disk, harrow, blade, and then mix with rotary tillers until the mixture is uniform and homogeneous throughout the depth to be stabilized.
5. Finish the stabilized subgrade to the Plan line, grade, and cross-section. Compact it to 100 percent of the maximum laboratory dry density as defined in Subsection 209.3.06.

   Plant mixing is permitted as an alternative to the mixed-in-place method.
6. Eliminate the mixing and scarifying method before compaction in undercut areas where Type III Stabilizer Aggregates are specified, unless otherwise specified by the Engineer.

C. Select Materials Subgrade

Place select materials as follows:

1. Construct the subgrade with a uniform blanket of select material consisting of Class I or II soil or graded aggregate (according to Plan dimensions or as directed by the Engineer). Class IIIC1 soils may be used in Districts 6 and 7 within the top 12 inch (300 mm) of subgrade if approved by the Office of Materials, Geotechnical Engineering Bureau. Do not use Class IIIC2, IIIC3 or IIIC4 soils within the top 12" (300mm) of subgrade unless a stabilizing

agent approved by the Engineer is added, or if approved by the Office of Materials, Geotechnical Engineering Bureau.

2. Use the select material reserved from the grading or borrow operations. If material is not available through this source, obtain it from other sources.
3. Finish and compact the material according to Subsection 209.3.05.A.

D. Shoulder Stabilization

Stabilize the shoulder as follows:

1. Spread the stabilizer aggregate at the rate and to the dimensions indicated on the Plans.
2. Mix the aggregate with the in-place shoulder material thoroughly to the Plan depth.
3. Compact the area thoroughly and finish it to Plan dimensions.
4. Prime the stabilized area according to Section 412 when a paving course is required on the shoulders.

E. Finishing Subgrade

When finishing subgrade use the following procedure:

1. Leave the underlying subgrade in cuts and fills low enough to accommodate the additional material when the work requires either subgrade stabilization, select material subgrade, or stabilization for shoulders.
2. Test short sections in curb and gutter areas might be necessary to obtain the proper elevation.
3. Blade the surface of the completed subgrade to a smooth and uniform texture.

209.3.06 Quality Acceptance

The Department will test representative samples of compacted material to determine the laboratory maximum dry density using GDT 7, GDT 24a, or GDT 67 as applicable.

The Department will determine in-place density of the compacted subgrade according to GDT 20, GDT 21, or GDT 59, as applicable.

Ensure that the centerline profile conforms to the established elevations with an acceptable tolerance of ±0.5 in (±13 mm). The acceptable tolerance under a template conforming to the designated cross section shall be ±0.25 in (±6 mm).

Have the Department test the maximum dry density using methods according to Subsection 209.3.05.A. When base construction is not in the same Contract, the tolerances may be 1 in (25 mm), 0.5 in (13 mm), and 95 percent respectively.

209.3.07 Contractor Warranty and Maintenance

General Provisions 101 through 150.

209.4 Measurement

A. Subgrade Construction and Finishing Subgrade

The Department will make no separate measurement or payment for the work described in this Section.

B. Subgrade Stabilization

Subgrade stabilization materials, as defined in Subsection 209.3.05.B is measured by the ton (megagram), cubic yard (meter), or square yard (meter) of the specified thickness if none of the existing Roadway Excavation and/or Borrow Materials are suitable and available for stabilizing the subgrade.

C. Select Material Subgrade

Select materials, conforming to Subsection 209.3.05.C are measured by the cubic yard (meter) in the hauling vehicle, per ton (megagram) according to Subsection 109.01, or by the square yard (meter) of the specified thickness when roadway excavation and/or borrow materials are not available or suitable for this Item.

D. Shoulder Stabilization

Shoulder stabilization is measured by the cubic yard (meter) or ton (megagram) as specified in Subsection 209.4.B.

209.4.01 Limits

General Provisions 101 through 150.

209.5 Payment

A. Subgrade Construction

The Department will make no separate payment for subgrade construction or for finishing subgrade.

B. Subgrade Stabilization

Subgrade stabilization complete and accepted according to Subsection 209.3.05.B will be paid for at the Contract Unit Price per cubic yard (meter), per ton (megagram), or per square yard (meter). This price is full compensation for furnishing the materials, hauling, placing, mixing, compacting, and finishing the stabilized subgrade.

C. Select Material Subgrade

Select material complete, accepted, and measured according to Subsection 209.4.C will be paid for at the Contract Unit Price per cubic yard (meter), per ton (megagram), or per square yard (meter). This price is full compensation for furnishing the material where required, hauling, placing, mixing, compacting and finishing the select material subgrade.

D. Shoulder Stabilization

This Item will be measured by Subsection 209.4.B. and paid for according to Subsection 209.5.B. This Item also includes furnishing and applying bituminous prime.

Payment will be made under:

Item No. 209	Stabilizer materials (class), (type), (thickness)	Per ton (megagram), cubic yard (meter), or square yard (meter)
Item No. 209	Select material subgrade (class), (type), (thickness)	Per ton (megagram), cubic yard (meter), or square yard (meter)
Item No. 209	Stabilizer aggregate for shoulders	Per ton (megagram), or cubic yard (meter)

209.5.01 Adjustments

General Provisions 101 through 150.

Section 210—Grading Complete

210.1 General Description

This work includes:

- Excavating of all materials including ditches, undesirable material (including removal and replacement), and borrow (if required)
- Hauling
- Forming embankments
- Constructing shoulders and subgrades
- Finishing, dressing, and disposing of undesirable or surplus material
- Clearing and grubbing according to Section 201 and Section 202 unless these items are established as Pay Items in the Contract
- Removing and disposing of miscellaneous roadway items, including but not limited to curbs, drainage structures, and pavements (unless established as separate contract items)

Ensure that the completed grading work conforms to the horizontal and vertical alignment and typical cross- sections shown on the Plans or as directed by the Engineer.

210.1.01 Definitions

General Provisions 101 through 150.

210.1.02 Related References

A. Standard Specifications

Section 109—Measurement and Payment

Section 201—Clearing and Grubbing Right-of-Way

Section 202—Random Clearing and Grubbing

Section 204—Channel Excavation

Section 205—Roadway Excavation

Section 206—Borrow Excavation

Section 207—Excavation and Backfill for Minor Structures

Section 208—Embankments

Section 209—Subgrade Construction

B. Referenced Documents

General Provisions 101 through 150.

210.1.03 Submittals

General Provisions 101 through 150.

210.2 Materials

Use materials required for grading construction that conform to the requirements of Section 204, Section 205, Section 206, Section 207, Section 208, and Section 209.

210.2.01 Delivery, Storage, and Handling

General Provisions 101 through 150.

210.3 Construction Requirements

210.3.01 Personnel

General Provisions 101 through 150.

210.3.02 Equipment

Use equipment approved by the Engineer that will not damage base, pavement, or other appurtenances to be retained.

210.3.03 Preparation

Before placing base material, finish the subgrade according to Subsection 209.3.05.E.

210.3.04 Fabrication

General Provisions 101 through 150.

210.3.05 Construction

Perform The Work according to the appropriate portions of Section 201, Section 202, Section 204, Section 205, Section 206, Section 207, Section 208, and Section 209 of the Specifications. Measurement and payment shall be according to the provisions of this Section. See Subsection 210.4 and Subsection 210.5, below.

210.3.06 Quality Acceptance

When the Engineer determines that the existing material in areas where fills are to be placed is undesirable, the Engineer may require the Contractor to remove the undesirable material and replace it with suitable material.

- Compact the replacement materials according to the applicable portions of Section 208.
- In cut areas, where the material below the template line is undesirable for subgrade or shoulders, undercut it to a depth established by the Engineer and replace it with suitable material.
- Compact the replacement materials as specified herein.

210.3.07 Contractor Warranty and Maintenance

General Provisions 101 through 150.

210.4 Measurement

A. Grading Complete

The Work under this Item is not measured separately for payment.

B. Grading Per Mile (Kilometer)

This Item is measured in linear miles (kilometers) along the centerline of the road or the median, including ramps where shown on the Plans.

C. Undercut Excavation

The amount of undercut excavation (when directed by the Engineer and not addressed in the Plans) measured for payment is the product of the length, width, and depth of excavation. Replacement material for undercut excavation is not measured for payment. There will be no separate payment for undercut excavation required by the Plans or rock excavation required under Subsection 205.3.

210.4.01 Limits

General Provisions 101 through 150.

210.5 Payment

A. Grading Complete

This Item completed and accepted will be paid for at the Lump Sum Price bid. Payment is full compensation for all work and materials specified in this Section.

B. Grading Per Mile (Kilometer)

This Item will be paid for at the Contract Unit Price per linear mile (kilometer) complete in place and accepted. This price is full compensation for furnishing the materials and performing the work specified in this Section.

C. Undercut Excavation

Undercutting areas not shown in the Plans when directed by the Engineer will be paid for at the rate of $7.50 per cubic yard ($9.80 per cubic meter) for quantities up to 750 yd^3 (575 m^3).

Quantities exceeding 750 yd^3 (575 m^3) will be considered Extra Work as defined in Subsection 109.05, and will be paid for accordingly. Payment is full compensation for excavating and disposing of undesirable material and supplying, placing, and compacting replacement material.

Payment will be made under:

Item No. 210	Grading complete	Per lump sum
Item No. 210	Grading per mile (kilometer)	Per mile (kilometer)
Item No. 210	Undercut excavation	Per cubic yard (meter)

210.5.01 Adjustments

General Provisions 101 through 150.

Section 211—Bridge Excavation and Backfill

211.1 General Description

This work includes the following responsibilities:

- Removing materials necessary for the construction of bridge footings and substructures
- Disposing of excess materials and required backfilling, including porous backfill
- Constructing and removing work bridges, cribs, cofferdams, and caissons
- Dewatering, draining, sheeting, and exploratory boring of foundations necessary to complete the work

Excavate and backfill concrete box culverts as specified in Section 207.

211.1.01 Definitions

Foundation: Material on which the footing of the substructure or seal rests.

211.1.02 Related References

A. Standard Specifications

Section 201—Clearing and Grubbing Right-of-Way

Section 207—Excavation and Backfill for Minor Structures

Section 500—Concrete Structures

Section 525—Cofferdams

Section 540—Removal of Existing Bridge

B. Referenced Documents

General Provisions 101 through 150.

211.2 Materials

211.2.01 Delivery, Storage, and Handling

A. Surplus Materials

Dispose of surplus, stockpiled, and excavated materials as directed by the Engineer. Materials may be spread neatly and smoothly on the right-of-way so as not to obstruct the channel of any existing or proposed waterway. Dispose of wasted materials according to Subsection 201.3.05.E.

211.3 Construction Requirements

211.3.01 Personnel

General Provisions 101 through 150.

211.3.02 Equipment

A. Cofferdams and Sheeting

Use necessary protection such as cofferdams and sheeting when working in or near excavations where the surrounding earth could fail and endanger personnel or damage the work.

Use cofferdams or sheeting to prevent undesirable changes in channels and slopes.

Construct, remove, and dispose of cofferdams according to Section 525, regardless of whether they are measured separately for payment.

211.3.03 Preparation

A. Preparation of Foundations

Prepare and maintain foundations as follows:

1. Do not subject concrete to the action of water before final setting, except as provided for seal concrete in Subsection 500.3.05.V.
2. Where footings are placed on a slightly sloped foundation of rock or hardpan, key the center of the foundation approximately 1 ft (300 mm) deep throughout an area approximately equal to the dimensions of the column to be placed (unless the Plans require entire footing to be keyed).
3. When the Engineer requires, step the foundation and remove all loose fragments and clean and fill seams as directed.
4. Do not disturb the top of the foundation to ensure that footings are placed on undisturbed material when they are not resting on rock or hardpan foundations.

211.3.04 Fabrication

General Provisions 101 through 150.

211.3.05 Construction

A. Foundations and Footings

The sizes and elevations shown on the Plans are approximate, and are subject to change when directed.

B. Inspection

Provide the Engineer ample opportunity and safe conditions (as determined by the Engineer) to inspect foundations and measure removed materials. Do not place concrete or close foundation areas from view until the area has been inspected and approved.

C. Boring of Foundations and Seals

Bore foundations as requested and in an approved manner so that the foundation's adequacy can be determined by the Engineer. Borings are usually required only for foundations and seals with no piles. All borings shall be made in the Engineer's presence.

Bore to at least 6 ft (1.8 m) deep in rock and 10 ft (3 m) deep in other material, excluding seals. The entire depth of the seal will usually be bored in only one location.

D. Backfill Construction

Follow these requirements when backfilling:

1. General

   Backfilling is a part of the work of excavation, except as noted.

   a. Place the backfill in layers not exceeding 1 ft (300 mm) of loose material. Compact the layer before placing the next layer.

      Backfill around all substructures except those located within the banks of a stream at normal water level.

   b. Do not jet backfills.

   c. Place backfill material to apply only balanced horizontal loads to a newly placed structure or portion of structure.

      Do not backfill portions of structures that do not have backfill on all sides until the concrete has reached the required strength (as determined by the Engineer) to withstand the earth pressures.

2. Intermediate Bents and Piers

   Compact backfill for intermediate bents and piers to the approximate density of the surrounding soil.

   a. Begin and complete backfilling around substructures not supported by piling the next workday after placing the lift, if possible. Backfill at least within three calendar days after placement.

   b. Backfill footings before beginning form work on the columns.

   c. Begin backfilling around pile-supported footings and columns after removing forms. Complete as soon as possible but within five calendar days after placing concrete.

3. End Bents and Abutments

   Compact backfill for end bents and abutments (including their wingwalls) to the density shown on the Standard Plans or Special Plans.

   a. Begin and complete the work no later than five calendar days after placing concrete, unless other time limits are indicated on the Plans.

      If other time limits are indicated, this work may be second stage construction or second stage backfill construction.

b. Step slopes behind abutments, unless otherwise shown, and take precautions to prevent the backfill from wedging against the abutment.

c. Provide drainage behind abutments and their wingwalls as shown on the Plans.

d. Place backfill for abutment footings and portions of walls having fill on both sides of the wall according to Subsection 211.3.05.D.4.

4. Backfill Material

Backfill around intermediate bents and piers with material removed from the excavation, unless the material is unsatisfactory to the Engineer.

a. Ensure that material for end bents and abutments meets the requirements shown on the Standard Plans or Special Plans.

When suitable material is not available within the immediate vicinity of the bridge within the right-of-way, locate a source acceptable to the Engineer and haul the material to the site.

b. Obtain and place backfill material necessary for end bent and abutment construction, including special backfill material used in constructing mechanically stabilized earth wall abutments.

c. Ensure that material located and hauled to the bridge site meets the requirements of Class I, Class II, or as shown in Subsection 810.2.01.A.1, unless otherwise noted. Class IIIC1 material may be used in Districts 6 and 7.

d. Ensure that porous backfill (when specified) consists of coarse aggregate size No. 57 as specified in Subsection 800.2.01, or crushed stone drainage material as specified in Subsection 806.2.02.A.

211.3.06 Quality Acceptance

General Provisions 101 through 150.

211.3.07 Contractor Warranty and Maintenance

General Provisions 101 through 150.

211.4 Measurement

A. Bridge Excavation

Bridge excavation is measured for payment as follows:

- Bridge excavation is measured in cubic yards (meters) of bridge excavation acceptably removed.
- No payment is made for materials removed outside the area bounded by vertical planes a maximum of 18 in (450 mm) outside of and parallel to the neat lines of the footings, unless otherwise shown on the Plans.
- No separate measurement is made under the Item of bridge excavation for excavation necessary for end bent construction unless otherwise shown on the Plans.
- Portions of structures removed under Section 540 that fall within the excavation limits are not included in the measurements for bridge excavation.
- The vertical pay dimension is measured from the original ground line. However, for grade separation structures, the vertical pay dimension is measured from the subgrade template of the roadway passing underneath, unless otherwise shown on the Plans.
- The vertical pay dimension for excavation at an intermediate bent (constructed within the limits of a previously placed end roll) includes the portion of the end roll that falls within the excavation limits.
- Each portion of a stepped footing is considered a separate footing (for measurement purposes).
- The bottom of each footing or step will be cross-sectioned by the Engineer (to obtain the elevation of the completed excavation).

B. Bridge Backfill

Bridge backfill is measured for payment as follows:

- No separate measurement is made for bridge backfill.
- Backfill material hauled to intermediate substructure locations according to Subsection 211.3.05.D.4. is not measured as bridge backfill, but is considered a Specification Allowance as set forth in Subsection 211.5.B.
- No allowance is made for material hauled in for use at bridge ends.

211.4.01 Limits

General Provisions 101 through 150.

211.5 Payment

A. Bridge Excavation

This work will be paid for at the Contract Price per cubic yard (meter) complete, or at the Contract Price modified as specified below:

1. The Department will pay for all eligible excavation down to 2 ft (600 mm) below the Plan foundation elevation at the Contract Price for bridge excavation.
2. The amount of payment for excavating lower than 2 ft (600 mm) below the Plan elevation is determined by increasing the Contract Price for bridge excavation as follows:
   a. If excavations extend 6 ft (1.8 m) or less below the Plan foundation elevation, payment for excavating the material from 2 ft (600 mm) below the Plan foundation elevation is at the Contract Price plus 50 percent.
   b. If excavations extend more than 6 ft (1.8 m) but not more than 10 ft (3 m), payment for excavating the material from 2 ft (600 mm) below the Plan Foundation elevation is at the Contract Price plus 75 percent.
   c. If excavations extend more than 10 ft (3 m) below the Plan foundation elevation, payment for excavating the material from 2 ft (600 mm) below the Plan foundation is at the Contract Price plus 100 percent.

B. Bridge Backfill

The Department will not pay for this work separately. Include the cost in other pay items included in the Bridge Contract.

The Department will pay 125 percent of the Contract Price for bridge excavation when the Contractor furnishes and hauls material used as replacement for unsuitable material excavated at intermediate substructure locations. Maximum dimensions and deductions are specified in Subsection 211.4.B.

Payment will be made under:

Item No. 211	Bridge excavation	Per cubic yard (meter)
Item No. 211	Bridge excavation grade separation	Per cubic yard (meter)
Item No. 211	Bridge excavation, stream crossing— no.___	Per cubic yard (meter)
Item No. 211	Porous backfill	Per cubic yard (meter)

211.5.01 Adjustments

General Provisions 101 through 150.

Section 212—Granular Embankment

212.1 General Description

This work includes furnishing, hauling, and placing granular material for constructing or reconstructing of the embankment according to the Plans.

212.1.01 Definitions

General Provisions 101 through 150.

212.1.02 Related References

A. Standard Specifications

Section 109—Measurement and Payment

Section 810—Roadway Materials

B. Related Documents

General Provisions 101 through 150.

212.1.03 Submittals

General Provisions 101 through 150.

212.2 Materials

Ensure that granular material meets the requirements of Class I-A-2 soil, Subsection 810.2.01.A, modified as follows:

Percent Passing No. 200 (75 µm)	0 to 18
Percent Clay	0 to 10

212.2.01 Delivery, Storage, and Handling

General Provisions 101 through 150.

212.3 Construction Requirements

212.3.01 Personnel

General Provisions 101 through 150.

212.3.02 Equipment

General Provisions 101 through 150.

212.3.03 Preparation

General Provisions 101 through 150.

212.3.04 Fabrication

General Provisions 101 through 150.

212.3.05 Construction

Follow these requirements when constructing a granular embankment:

1. Place the embankment at the location(s) shown on the Plans.
2. Ensure that thickness of the lifts and the compaction are approved by the Engineer.

3. When granular embankment material is placed under water, place the granular material on dry ground above the high-water level then push the material toward and into the water according to the limits and dimensions shown on the Plans.

212.3.06 Quality Acceptance

General Provisions 101 through 150.

212.3.07 Contractor Warranty and Maintenance

General Provisions 101 through 150.

212.4 Measurement

Furnished granular embankment material complete in place and accepted, is measured by volume according to the following cases:

A. Pit with Multiple Party Access

When granular embankment material is obtained from a pit from which multiple parties have access, the granular embankment is measured by volume in the hauling vehicle as specified in Subsection 109.01.

B. Pit with Exclusive Access

When granular embankment material is obtained from a pit dedicated exclusively to the Project on which payment for granular embankment is being made, the granular embankment is measured for payment using the average end area method to determine the volume of material removed from the pit and incorporated into The Work.

C. Quarry

When granular embankment material is obtained from a quarry, a certified weight ticket shall accompany the material. The weight of the material delivered and accepted is converted to an equivalent volume based on the dry loose unit weight of the material provided.

212.4.01 Limits

General Provisions 101 through 150.

212.5 Payment

Granular embankment material will be paid for at the Contract Price per cubic yard (meter). This price is full compensation for furnishing material, hauling, placing, compacting, and providing labor, equipment, and superintendence necessary to complete The Work.

Payment will be made under:

Item No. 212	Granular embankment, including material and haul	Per cubic yard (meter)

212.5.01 Adjustments

General Provisions 101 through 150.

Section 213-Sand Backfill

213.1 General Description

Specifications for this work will be included elsewhere in the Contract.

Section 214—Mitigation Site Construction

214.1 General Description

Specifications for this work will be included elsewhere in the Contract.

Section 215—Removal of Solid Waste

215.1 General Description

This work includes excavating, removing, and disposing of solid waste discovered during construction or shown on the Plans. Remove materials according to this Specification, Plan details, and as directed by the Engineer.

215.1.01 Definitions

Solid Waste: Discarded putrescible (i.e. liable to rot) and non-putrescible wastes such as trash, garbage, animal carcasses, debris, and materials not natural to the area.

215.1.02 Related References

A. Standard Specifications

Section 107—Legal Regulations and Responsibility to the Public

Section 109—Measurement and Payment

Section 208—Embankments

B. Referenced Documents

QPL 64

215.1.03 Submittals

Submit a report of disposal from the municipal solid waste landfill to the Engineer for each load of solid waste removed from the project.

215.2 Materials

Handle hazardous materials according to Subsection 107.22, “Hazardous and/or Toxic Waste.”

A. Soil Cover Materials

Soil materials used to cover exposed areas of a removal site may be any noncontaminated earth material approved by the Engineer.

B. Odor Control Chemicals

Acceptable odor control chemicals used for solid waste removal are listed on the Georgia Department of Transportation QPL 64. Similar or equal chemicals may be substituted when approved by the Engineer.

215.2.01 Delivery, Storage, and Handling

General Provisions 101 through 150.

215.3 Construction Requirements

215.3.01 Personnel

General Provisions 101 through 150.

215.3.02 Equipment

General Provisions 101 through 150.

215.3.03 Preparation

General Provisions 101 through 150.

215.3.04 Fabrication

General Provisions 101 through 150.

215.3.05 Construction

A. Worker Protection

Provide effective engineering and work practice controls to protect employee health and safety.

B. Applicable Specifications

Perform this work according to this Specification and strictly comply with federal, state, or local codes or ordinances pertaining to removing solid waste.

Verify the accuracy and existence of applicable codes, ordinances, or other regulations by obtaining and interpreting state, county, city, or local municipality by-laws for solid waste disposal.

C. Site Information

The Department will make available existing boring logs of sites shown on the Plans. Prospective bidders can obtain this information by contacting the Geotechnical Engineering Bureau of the Office of Materials at (404) 363-7549.

D. Site Categories

Solid waste removal sites are designated as “Shown on the Plans” or “Discovered during Construction” for the purpose of this Specification.

E. Removal and Disposal Procedures

Remove and dispose of solid waste using these requirements:

1. Sites Shown on the Plans

   Work with solid waste sites shown on the Plans according to these requirements:

   a. Give the Engineer two weeks notice before removing solid waste.

      The Engineer will notify the local governing authority of the proposed work and tentative time schedules.

   b. After beginning to excavate solid waste, give the work constant attention.

      Excavate the material to the full depth and width of the cut in one continuous operation, leaving minimum exposed surface.

   c. Leave working faces of the cut as near vertical as possible. However, slope them enough to safely place a layer of soil over the exposed areas.

   d. Transport solid waste to a permitted municipal solid waste landfill. Obtain a listing of permitted municipal solid waste landfills by contacting the Georgia Environmental Protection Division, Land Protection Compliance Program at (404) 362-2696.

   e. Obtain permission for disposal from the landfill. You must have the Engineer’s approval of the disposal site.

   f. Fill trucks hauling material from the removal site to less than full capacity to prevent spills.

Completely cover the truck body with a waterproof tarpaulin, large enough to extend over the sides and end of the bed to secure the material in transit. Fasten the tarpaulin securely.

g. At the end of each day's work, cover exposed areas of the removal site with a 6 in (150 mm) layer of clean earth. Include the cost of this work in the overall bid submitted.

h. Spray odor control chemicals on the exposed solid waste and on hauling vehicles as outlined in Subsection 215.3.05.F, "Odor Control."

i. When directed by the Engineer, overexcavate the area based on the conditions of the solid waste site during removal. Overexcavation is measured and paid for according to Subsection 215.4, "Measurement" and Subsection 215.5, "Payment."

j. When removal is complete, backfill solid waste areas according to the embankment construction requirements in Section 208. Include the cost of this work in the applicable bid prices for unclassified and borrow.

2. Solid Waste Sites Discovered During Construction

Control solid waste sites discovered during construction by following these requirements:

a. Report solid waste sites discovered during construction to the Engineer, immediately. Stop work in the vicinity until the Engineer determines an appropriate Plan for removal and payment.

b. Conduct Work approved by the Engineer under the provisions of Subsection 109.05, "Extra Work."

c. Remove, dispose of, and backfill according to this Specification and Subsection 107.22, "Hazardous and/or Toxic Waste."

F. Odor Control

Control objectionable odors from the exposed solid waste at the removal site and on haul trucks in transit as follows:

1. Use an effective odor control chemical selected from QPL 64, or an approved equivalent.

The Engineer will cooperate with the local governing authority to determine the acceptability of the odor control chemical, the application concentration, and the application frequency in the removal area and on the hauling vehicles.

2. Keep available a minimum three-day supply of odor control chemical to treat the solid waste during removal operations. During the last three days of removal, the Engineer may allow the odor chemical inventory be reduced to save expenses.

Include the cost of spray material, labor, and equipment necessary to control objectionable odors in the overall bid submitted.

215.3.06 Quality Acceptance

General Provisions 101 through 150.

215.3.07 Contractor Warranty and Maintenance

General Provisions 101 through 150.

215.4 Measurement

The work performed under this item is measured as follows:

A. Sites Shown on the Plans

Removing solid waste from sites shown on the Plans is measured by the cubic yard (meter).

The volume of material measured for payment will be based on cross-section measurements using the average end area method.

Excavating outside the neat lines shown on the Plans is not measured for payment unless the work is directed and authorized by the Engineer.

B. Sites Discovered during Construction

Work for solid waste removal sites discovered during construction is measured according to Subsection 109.05, "Extra Work."

C. Overexcavation of Solid Waste

Overexcavating solid waste to depths below those shown on the Plans is measured by the cubic yard (meter). Volume calculations are described in Subsection 215.4.A, "Sites Shown on the Plans."

215.5 Payment

Work performed under this Item will be paid for as follows:

A. Sites Shown on the Plans

Removing solid waste from sites shown on the Plans will be paid for at the Contract Unit Price bid per cubic yard (meter). This is full compensation for excavating the solid waste material; hauling and properly disposing of the hazardous materials; closing the remaining landfill site; constructing necessary haul roads; furnishing chemicals and spraying the removal site, trucks, and contents as required; disposing at a permitted municipal solid waste landfill; and providing fencing, labor, equipment, tools, direction, and incidentals necessary to complete the Item.

B. Sites Discovered during Construction

Removing solid waste from sites discovered during construction will be paid for according to Subsection 109.05.

C. Overexcavation of Solid Waste

When the Engineer requires removal of solid waste beyond the limits shown on the Plans, payment for removal and disposal will be as follows:

1. Solid waste removed from within the neat cross sections shown on the Plans, and to the depth of 3 ft (1 m) below those cross sections, will be paid for at the Unit Price bid per cubic yard (meter) for removing solid waste.
2. Solid waste removed to depths below the 3 ft (1 m) specified above will be paid for as follows:
   a. Over 3 ft (1 m) but not over 10 ft (3 m) deep:

      This material will be paid for at the rate of 110 percent of the Unit Price bid per cubic yard (meter) for that portion of the material over 3 ft (1 m) but not over 10 ft (3 m) of extra depth.

   b. More than 10 ft (3 m) deep:

      If the extra depth exceeds 10 ft (3 m), stop work in that area. The Engineer will request an investigation by the Office of Materials.

      If necessary to excavate below the 10 ft (3 m) level, do not resume work until a satisfactory plan for payment has been established.

Payment will be made under:

Item No. 215	Removal of solid waste	Per cubic yard (meter)

215.5.01 Adjustments

General Provisions 101 through 150.

Section 216—Unpaved Shoulders

216.1 General Description

This work includes constructing unpaved shoulders.

216.1.01 Definitions

General Provisions 101 through 150.

216.1.02 Related References

A. Standard Specifications

Section 106—Control of Materials

Section 205—Roadway Excavation

Section 210—Grading Complete

Section 817—Shoulder Material

B. Referenced Documents

GDT 7

GDT 20

GDT 21

GDT 24a

GDT 59

GDT 67

216.1.03 Submittals

General Provisions 101 through 150.

216.2 Materials

Unless otherwise specified in the Proposal, ensure that the material conforms to Section 817. The provisions of Section 106 apply to shoulder materials obtained from sources off the Right-of-Way.

216.2.01 Delivery, Storage, and Handling

General Provisions 101 through 150.

216.3 Construction Requirements

216.3.01 Personnel

General Provisions 101 through 150.

216.3.02 Equipment

Before beginning shoulder construction, have the required equipment on the Project and in good working condition. Use equipment approved by the Engineer. The Engineer will not permit tractors with treads or equipment that damage existing base, surfacing, or pavement.

216.3.03 Preparation

General Provisions 101 through 150.

216.3.04 Fabrication

General Provisions 101 through 150.

216.3.05 Construction

A. General

Shape and compact shoulders in sequence as required for the type of base or pavement being constructed. Promptly repair damage to an existing base, surface, or pavement due to shoulder construction. Repairs are to be made at no expense to the Department.

B. Compaction

Immediately compact shoulders as follows to reduce erosion:

1. Grassed Shoulders

   Compact shoulder areas above subgrade elevation that require grassing or sodding to a firm and stable condition as determined by the Engineer.
2. Ungrassed Shoulders

   Ensure that ungrassed shoulder areas (including ungrassed stabilized shoulders and paved shoulders) have a resultant density of at least 100 percent of the maximum laboratory dry density. The density is determined from compacted representative samples of the material using GDT 7, GDT 67, or GDT 24a, whichever applies. The in-place density of the compacted shoulder will be determined according to GDT 20, GDT 21, or GDT 59, whichever applies.
3. All Shoulders

   Compact shoulders adjacent to a flexible base at least 18 in (450 mm) wider on each side along with the base course.

C. Maintenance

Maintain shoulders as follows:

1. Cut weep holes through shoulders constructed prior to flexible bases to prevent impoundment of water on the road-bed or subgrade.
2. Provide adequate temporary drainage facilities to prevent excessive erosion when front slopes are subject to concentrated water at weep holes.
3. Promptly repair excessive erosion to prevent damage to the adjacent base or pavement.
4. Repair and dress adjacent slopes and remove excess material from adjacent ditches when shaping, dressing, and compacting shoulders.

D. Construction Sequence

Construct unpaved shoulders as follows:

1. Portland Cement Concrete Bases and Pavements

   Construct, shape, and compact the shoulders as soon as the curing period is complete on each section.
2. Hot Mix Asphaltic Concrete Pavement

   Construct shoulders adjacent to hot mix asphaltic concrete pavement according to the following case scenarios:

   a. Hot Mix Asphaltic Concrete Bases

      Construct, shape, and compact the shoulders as soon as the final rolling is complete on each section.

   b. Hot Mix Asphaltic Concrete Intermediate and Surface Courses

      Place the shoulder material for the underlying base course and compact it before beginning the intermediate or surface course. Place, shape, and compact the remaining shoulder material after completing the final rolling of each section of surface course.
3. Flexible Bases or Pavements (except those listed under Subsection 216.3.05.D.2.a and Subsection 216.3.05.D.2.b)

   Follow these requirements except when constructing shoulders and base courses of the same materials:

a. Before constructing the base or pavement, place loose shoulder material to construct the compacted width of shoulder shown on the Plans.

   Place the loose shoulder material at a proper distance outside the proposed edge of base or pavement.

b. After initially manipulating and compacting the base or paving material, use the blade grader to pull the shoulder up to, but not inside of, the proposed edge of the base or pavement.

c. When constructing multiple courses, construct the shoulders, base, or pavement using the same number of courses. Prevent excessive erosion from concentrated water at weep holes by keeping the distance from the base or pavement construction to the shoulder construction to a minimum. Move smoothly and efficiently between the two operations.

4. Stabilized Shoulders

   When the Plans or Proposal call for stabilized shoulders, add the stabilizer according to the Specification pertaining to that Item.

5. Shoulders Constructed with Base Material

   When constructing shoulders and base courses out of the same materials, place and construct the shoulder material in the same way as the base material.

6. Shoulders Constructed under Traffic

   When constructing shoulders on highways that are open to traffic, use the following construction operations:

   a. Removing Existing Shoulder Materials

      Do not remove existing shoulders or portions of existing shoulders more than 1,500 ft (450 m) ahead of paving operations. Also, comply with this limitation when constructing new shoulders and paving is not involved.

   b. Constructing Shoulders

      Complete and compact shoulders within a distance of 1,500 ft (450 m) or less behind finished paving operations.

   c. Enforcing Construction Limitations

      When trenching out or rebuilding the shoulders on opposite sides of the pavement simultaneously, separate the two operations by at least 1 mile (1600 m), leaving at least one usable shoulder to protect passing traffic.

216.3.06 Quality Acceptance

General Provisions 101 through 150.

216.3.07 Contractor Warranty and Maintenance

General Provisions 101 through 150.

216.4 Measurement

A. Materials Obtained from Roadbed

Shoulders constructed from material obtained from adjacent portions of the roadbed are measured according to Subsection 205.4, “Measurement” or Subsection 210.4, “Measurement,” as applicable.

B. Shoulders Adjacent to Stabilized Bases

When bases are constructed by stabilizing the existing roadbed, and the shoulders are to be bladed into section using materials from the existing roadbed, no measurement of shoulder materials will be made.

C. Shoulders Constructed with New Base Course Materials

New shoulders constructed of the same material as the new base course by spreading the base course material full width of the roadbed is measured for payment according to the appropriate Specification for the type base course.

D. Shoulders Constructed with Selected Shoulder Material

Selected shoulder material, including accepted pervious and impervious shoulder material obtained from pits or other sources off the Right-of-Way, is measured in cubic yards (meters) loose volume in vehicles when dumping.

216.4.01 Limits

General Provisions 101 through 150.

216.5 Payment

A. Shoulders Constructed with Materials Obtained from Existing Roadbed

Measured shoulder material obtained from the existing roadbed will be paid at the Contract Unit Price per cubic yard (meter) for Section 205.

Shoulders constructed out of existing roadway materials including selected borrow already in position from prior construction operations, will not be paid for separately. Payment for these materials will be made under the pertinent items required to place these materials in position.

B. Shoulders Constructed with New Base Course Materials

Shoulders constructed from new base course materials will be paid for according to the appropriate Specifications for the type of base course.

C. Shoulders Constructed with Selected Shoulder Material

Selected shoulder material, including accepted pervious and impervious shoulder material obtained from pits or other sources off the Right-of-Way, will be paid for at the Contract Unit Price per cubic yard (meter) or square yard (meter) of a specified thickness. Payment is full compensation for furnishing the material when specified and for performing construction, compaction, and other work specified in this Section pertaining to the Item.

If under the provisions of Section 106 the Contractor shall pay royalties for the selected shoulder material, the Pay Item is listed with the words “Including Material” added.

Payment will be made under:

Item No. 216	Selected material for shoulder construction	Per cubic yard (meter) or square yard (meter), ___ in (mm) average thickness
Item No. 216	Selected material for shoulder construction including material	Per cubic yard (meter) or square yard (meter), ___ in (mm) average thickness

216.5.01 Adjustments

General Provisions 101 through 150.

Section 217—Removal of Underground Storage Tanks

217.1 General Description

This work includes excavating, removing, and disposing of underground storage tank (UST) systems discovered during construction or shown on the Plans.

Remove materials according to this Specification, Plan details, and as directed by the Engineer.

217.1.01 Definitions

Underground storage tank system: A tank with at least 10 percent of its volume underground, including the pipes and pumps connected to the tank. The tanks may be used to store petroleum products or hazardous chemicals. Tanks used for the following are specifically excluded from Georgia EPD Rules (Chapter 391-3-15) and EPA regulation 40 CFR Part 280:

- Farm or residential tanks of 1100 gal (4160 L) or less capacity used for storing motor fuel for noncommercial uses
- Tanks used for storing heating oil for consumptive use of the premises where stored
- Pipeline facilities

Remove tanks excluded from Georgia EPD Rules (Chapter 391-3-15) and EPA regulation 40 CFR Part 280 according to the American Petroleum Institute's Recommended Practice 1604 (API 1604).

217.1.02 Related References

A. Standard Specifications

Section 107—Legal Regulations and Responsibility to the Public

Section 109—Measurement and Payment

Section 208—Embankments

B. Referenced Documents

Georgia EPD Rules (Chapter 391-3-15)

EPA regulation 40 CFR Part 280

American Petroleum Institute's Recommended Practice 1604 (API 1604)

217.1.03 Submittals

A. UST Systems Shown on the Plans

Submit documentation of proper disposal to the Engineer no later than the day following disposal.

Submit the soil or water samples to a laboratory approved by the Engineer for testing.

Submit to the Engineer a completed test report, sketch, and certification that the tests were performed according to EPD rules. Submit the documentation within 30 days after the date the samples were taken.

217.2 Materials

A. Soil Backfill

To backfill a UST removal site, use earth materials approved by the Engineer.

B. Hazardous Materials

Handle materials classified as hazardous according to Subsection 107.22, "Hazardous and/or Toxic Waste."

217.2.01 Delivery, Storage, and Handling

General Provisions 101 through 150.

217.3 Construction Requirements

217.3.01 Personnel

General Provisions 101 through 150.

217.3.02 Equipment

General Provisions 101 through 150.

217.3.03 Preparation

Two weeks before working on UST systems shown in the Plans, notify the Engineer in writing. The Engineer will inspect the work with the Office of Materials and the District's UST Tank Pull Inspector.

When the Engineer grants approval to proceed and the UST Tank Pull Inspector is present onsite to monitor the UST removal, proceed with the work according to the requirements outlined in Subsection 217.3.05.A, "Applicable Specifications."

217.3.04 Fabrication

General Provisions 101 through 150.

217.3.05 Construction

A. Applicable Specifications

Remove and dispose of UST systems according to the American Petroleum Institute's Recommended Practice 1604 (API 1604), Georgia EPD Rules (Chapter 391-3-15), and EPA regulation 40 CFR Part 280.

In addition to these requirements, strictly comply with Federal, State, or local codes or ordinances pertaining to removing UST systems.

Verify the accuracy and existence of applicable codes, ordinances, and other regulations by obtaining and interpreting state, county, city, or local municipality by-laws for solid waste disposal.

B. UST Categories

For this Specification, UST systems are categorized as those shown on the Plans or discovered during construction.

1. UST Systems Shown on the Plans
   a. Consider UST systems shown on the Plans as a normal part of the Contract.
   b. Assume liability for improperly removing and disposing of UST systems. Prevent spilling the contents of the tank and carefully handle and transport the tank to the permitted disposal area.

      Immediately contain any spills and remove and dispose of the contaminated soil at no cost to the Department.

      If the Engineer determines that the Contractor is negligent in containing and remediating spills, the Department will hire outside forces to perform the work and deduct the cost from the Contractor's payments.
   c. Dispose of the tank, contents, and contaminated soils according to EPD rules.
   d. After removing the tank and its contents, take soil samples as specified in the EPD rules and sketch the location and depth from which the samples were taken.
   e. If soils in the tank pit are visually contaminated, remove the soils through additional excavation (over-excavation).

      Over-excavate to the limits of contamination or a maximum of 4 ft. (1.2 m) deep, whichever occurs first. After completing over-excavation, take soil samples as specified above.

      If water is present in the pit after removing tank or over-excavating, take a water sample.

f. Submit the soil and/or water samples to a laboratory approved by the Engineer for testing. Give the Engineer a complete test report and certification that the tests were performed according to EPD rules.

g. Place and compact backfill material for tank pit areas within the construction limits according to Section 208.

Tank pit areas on the right-of-way outside the construction limits will not require any special placement procedure or compaction testing. Leave the area level, smooth, and dressed to the satisfaction of the Engineer.

2. UST Systems Discovered During Construction

If a UST system is discovered during construction, notify the Engineer immediately.

a. Stop work in the vicinity of the UST until arrangements for removal and disposal have been made.

b. Upon the Engineer's approval to proceed, perform the work according to Subsection 217.3.05.A and Subsection 217.3.05.B.1.b.

217.3.06 Quality Acceptance

General Provisions 101 through 150.

217.3.07 Contractor Warranty and Maintenance

General Provisions 101 through 150.

217.4 Measurement

The work performed under this Item is measured as follows:

A. UST Shown on Plans

UST systems shown on the Plans are measured on a per each basis.

B. UST Discovered during Construction

Work for UST systems discovered during construction is measured according to Subsection 109.05.

C. Over-excavation of Contaminated Soil

Over-excavation of contaminated soil for UST systems shown on the Plans is measured by the cubic yard (meter).

The volume of material measured for payment is the difference in the tank pit volume based on neat line plan dimensions minus the volume of the completed excavation area as determined from cross sections, using the average end area method.

Excavation outside Plan dimensions or dimensions established by the Engineer will not be measured for payment. Disposal of contaminated soil is not measured separately.

217.4.01 Limits

General Provisions 101 through 150.

217.5 Payment

Work performed under this Item will be paid as follows:

A. UST Shown on Plans

UST systems shown on the Plans and removed under this Item will be paid for at the Contract Unit Price per each.

Payment is full compensation for excavating, testing, hauling, and handling according to Georgia Environmental Protection Division Rules, as well as backfilling, compacting, fencing, and removing and disposing of contaminated soil, tank, tank contents, and all other incidentals necessary to complete the work.

B. UST Discovered During Construction

Removing UST systems discovered during construction will be paid for according to Subsection 109.05.

C. Over-excavation of Contaminated Soil

Over-excavating contaminated soil will be paid for at the Contract Unit Price per cubic yard (meter). Payment is full compensation for removing, hauling, properly disposing, backfilling, and compacting.

Payment will be made under:

Item No. 217	Removal of underground storage tank, station No. _____	Per each
Item No. 217	Over-excavation of contaminated soil	Per cubic yard (meter)

217.5.01 Adjustment

General Provisions 101 through 150.

Section 218—Blanket for Fill Slopes

218.1 General Description

This work includes placing a blanket material on fill slopes as shown on the Plans.

218.1.01 Definitions

General Provisions 101 through 150.

218.1.02 Related References

A. Standard Specifications

Section 893—Miscellaneous Planting Materials

B. Referenced Documents

General Provisions 101 through 150.

218.1.03 Submittals

General Provisions 101 through 150.

218.2 Materials

Use blanket material that meets the requirements on the Plans or in the Special Provisions. Ensure that plant topsoil meets the requirements of Subsection 893.2.01.

216.2.01 Delivery, Storage, and Handling

General Provisions 101 through 150.

218.3 Construction Requirements

218.3.01 Personnel

General Provisions 101 through 150.

218.3.02 Equipment

General Provisions 101 through 150.

218.3.03 Preparation

General Provisions 101 through 150.

218.3.04 Fabrication

General Provisions 101 through 150.

218.3.05 Construction

A. Remove Vegetation, Roots, and Trash

Remove vegetation, roots, trash, or materials that hinder the preparation of a proper bed for grassing as a part of this Item.

B. Plant Topsoil

To reduce plant topsoil loss from erosion, place the soil shortly before and in conjunction with grassing operations, unless otherwise directed. After placing material, replace material lost from erosion at no additional expense to the Department.

218.3.06 Quality Acceptance

General Provisions 101 through 150.

218.3.07 Contractor Warranty and Maintenance

General Provisions 101 through 150.

218.4 Measurement

The quantity of material placed and accepted under this Item is measured in cubic yards (meters), loose measure, in the vehicles at the point of dumping.

218.4.01 Limits

General Provisions 101 through 150.

218.5 Payment

Payment will be made under:

Item No. 218	Blanket for fill slopes	Per cubic yard (meter)

218.5.01 Adjustment

General Provisions 101 through 150.

Section 219—Crushed Aggregate Subbase

219.1 General Description

Specifications for this work will be included elsewhere in the Contract.

Section 221—Special Subgrade Compaction and Test Rolling

221.1 General Description

This work includes rolling subgrades using a special roller described in this Section and repairing weak places discovered during rolling.

The Item does not take the place of compaction or subgrade improvement specified elsewhere in the Specifications. It consists of the following complete operations:

- Test rolling and performing final compaction and preparation of the finished subgrade using special rolling and compaction equipment
- Replacing or repairing weak areas that develop in the finished subgrade from manipulating the test rolling equipment
- Continuing test rolling to compact repaired areas until the entire subgrade remains firm
- Protecting culverts and bridges from damage according to specified construction methods

221.1.01 Definitions

General Provisions 101 through 150.

221.1.02 Related References

General Provisions 101 through 150.

221.1.03 Submittals

General Provisions 101 through 150.

221.2 Materials

General Provisions 101 through 150.

221.2.01 Delivery, Storage, and Handling

General Provisions 101 through 150.

221.3 Construction Requirements

221.3.01 Personnel

General Provisions 101 through 150.

221.3.02 Equipment

Use the following equipment for special subgrade compaction and test rolling. Do not vary from these Specifications except by written permission from the Engineer.

A. Roller

Use a pneumatic-tired roller with these features:

- Single-axle base with four wheels
- Gross weight adjustable from 35 to 50 tons (31 to 45 Mg) as determined by the Engineer
- Wheels constructed to allow free rocking and oscillation
- Roller no more than 10 ft (3 m) wide overall with a turning radius of 15 ft (4.5 m) or less

Have a separate tractor unit pull the roller unless a self-propelled roller meets all of these requirements.

Use 18:00 x 25 tires inflated to the pressure recommended by the manufacturer for the wheel load but to not less than 90 psi (620 kPa).

Ensure that the gross contact area (entire surface of the tire on a flat surface) is no more than 331 in² (0.213 m²) per tire and the net contact area (treads) is no more than 166 in² (0.107 m²) per tire.

221.3.03 Preparation

Prepare the surface to be test rolled to the proper grade and cross-section. Ensure the top 8 in (200 mm) of the surface is within 3 percentage points of the optimum moisture content when rolling.

221.3.04 Fabrication

General Provisions 101 through 150.

221.3.05 Construction

A. Subgrade Preparation

When required, stabilize in the specified areas according to the Specifications before test rolling.

B. Extent of Rolling

Test roll on all portions of the subgrade under the proposed base, subbase, or pavement, plus a 2 ft (600 mm) width on each side. Exclude ramps servicing private property.

1. Roll frontage roads, spur connections, crossovers, and intersections according to the same requirements. The cost of rolling is considered incidental to the Item.
2. Test roll parallel to the centerline, with the forward speed of the roller between 2 and 5 miles (3 and 8 km) per hour.
3. Roll one outer edge then the other outer edge. Progress uniformly toward the center section until passing over the entire surface area at least twice.
4. Roll the entire width in segments long enough so that each segment takes about half a day.
5. Stop rolling during extreme moisture. If the moisture content of the subgrade is deficient, correct it by adding water.
6. Roll in the presence of the Engineer, who will mark the extent of weak areas and depressions immediately.

C. Repairs to Subgrade

Repair depressions and weak spots discovered while rolling.

1. The repairs may consist of removing unsatisfactory materials, replacing them with satisfactory materials, and strengthening or stabilizing the materials in place.
2. The Engineer will decide what repairs to make. Place and compact materials in the roadbed as specified for embankment or subgrades, whichever is appropriate.
3. Test roll again after making the repairs until the repaired areas are satisfactory according to these Specifications.

D. Test Rolling at Structures

Protect structures and prevent damage to them. Repair or replace damage caused by the test rolling at no expense to the Department.

1. Bridges

   Do not allow the rolling unit within 10 ft (3 m) of bridge ends or bridge approach slabs.

   Do not allow the rolling unit to cross a bridge on its own wheels when the unit's weight exceeds 23,000 lbs (10 433 kg) for a 1-axle loading.
2. Culvert Type Structures

   When a culvert type structure falls within the limits of the test rolling area and the finished surface of the subgrade is less than 4 ft (1.2 m) above the exterior of the structure, do not allow the rolling unit within 10 ft (3 m) of the structure. Do not allow the rolling unit to cross any portion of the structure, except by one of the following methods selected by the Contractor.

   Follow these protection methods. Assume responsibility for damage to a structure.

a. Detour the rolling unit off the roadway and around the structure to the opposite side where rolling is resumed.

b. Transport the rolling unit across the structure if the gross weight of the loaded transporting unit does not exceed 23,000 lbs (10 433 kg) for a 1-axle loading.

c. Construct an embankment ramp over the structure to provide a minimum cover of 4 ft (1.2 m) over the top. The ramp must extend to the same elevation on each side for a minimum distance of 10 ft (3 m) from its exterior.

Place and remove the ramp at no expense to the Department.

221.3.06 Quality Acceptance

General Provisions 101 through 150.

221.3.07 Contractor Warranty and Maintenance

General Provisions 101 through 150.

221.4 Measurement

A. Test Rolling

Special subgrade compaction and test rolling is measured in miles (kilometers) along the center of the road—excluding bridges (regardless of the width and number of lanes to be rolled).

Frontage roads, spur connections, crossovers, and intersecting roads (including their ramp connections) falling within the right-of-way and within the limits of the Project are included in the overall length of the roadway shown for the Item, or included in the distance for any portion specified on the Plans.

B. Repairs to Subgrade

Materials removed under this Specification, regardless of their nature, are measured for payment according to Section 205 as Unclassified Excavation.

If the moved materials are laid aside or stockpiled and later used again, excavating these materials and placing them in the roadbed is measured for payment as Unclassified Excavation.

If new materials are required, they will be measured and paid for at the Unit Price bid for the materials according to Section 205 or Section 209, as applicable.

221.4.01 Limits

General Provisions 101 through 150.

221.5 Payment

A. Test Rolling

Special subgrade compaction and test rolling will be paid for at the Unit Price bid per mile (kilometer) completed and accepted. Payment is full compensation for preparing the surface, transporting the roller, moving the roller across or around prohibited areas, rolling as specified, watering, and providing incidentals necessary to complete the Item.

No separate payment will be made for protecting structures. Include the cost in the Unit Price bid for special subgrade compaction and test rolling.

B. Repairs to Subgrade

Payment for repaired subgrades will be according to Section 205 and Section 209, where applicable.

Payment will be made under:

Item No. 221	Special subgrade compaction and test rolling	Per mile (kilometer)

221.5.01 Adjustment

General Provisions 101 through 150.

Section 222—Aggregate Drainage Courses

222.1 General Description

This work includes installing aggregate drainage courses. The drainage courses shall conform to the Specifications and to the lines, grades, and dimensions shown on the Plans or directed by the Engineer.

222.1.01 Definitions

General Provisions 101 through 150.

222.1.02 Related References

A. Standard Specifications

Section 109—Measurement and Payment

Section 208—Embankments

Section 209—Subgrade Construction

Section 806—Aggregate for Drainage

B. Referenced Documents

General Provisions 101 through 150.

222.1.03 Submittals

General Provisions 101 through 150.

222.2 Materials

Ensure that materials meet the requirements of the following Specifications:

Material	Subsection
Type I Aggregate Drainage Course	806.2.01
Type II Aggregate Drainage Course	806.2.02
Type III Drainage Blanket Material	806.2.03

222.2.01 Delivery, Storage, and Handling

General Provisions 101 through 150.

222.3 Construction Requirements

222.3.01 Personnel

General Provisions 101 through 150.

222.3.02 Equipment

A. Embankment or Subgrades

To spread a uniform layer of coarse or fine aggregate without segregation and compact it to the specified requirements, use hauling and spreading equipment approved by the Engineer.

B. Other Surfaces

On any other surface, including wet and unstable areas, use trucks for end-dumping, and bulldozers and road machines for spreading.

222.3.03 Preparation

General Provisions 101 through 150.

222.3.04 Fabrication

General Provisions 101 through 150.

222.3.05 Construction

Construct the roadbed according to the lines, grades, and typical cross-sections shown on the Plans and according to Section 208 and Section 209.

Use coarse aggregate, drainage course, and drainage blanket material as follows:

Type I Aggregate Drainage Course	Use in a trench around pipe or in the shoulder in conjunction with a trench.
Type II Aggregate Drainage Course	Use as a drainage blanket under sidewalks, curbs and gutter, and beneath the pavement system or shoulders.
Type III Drainage Blanket Material	Use on parts of the roadway shown on the Plans as requiring a drainage blanket.

A. Prepared Embankments or Subgrades

1. Place the Material

   Spread the material uniformly to obtain the compacted depth required on the Plans and as follows:

   a. The maximum thickness of each course is 6 in (150 mm) compacted, except as noted in Subsection 222.3.02.B, “Other Surfaces.”

   b. If installing an underdrain system immediately under or adjacent to the aggregate drainage course, connect the drainage course directly to the underdrain system.

   c. After placing the pavement, make the subbase outside of the pavement flush with the outside pavement edge. Do not cut cement-stabilized subbase—keep it in place.

   d. When necessary, cover a shoulder drainage course with a second layer of shoulder pavement to prevent contaminating the aggregate drainage material.

2. Compact the Material

   Compact the material according to the following procedures, and have the Engineer approve it.

   a. Unless specified otherwise by the Engineer, begin rolling on the outer edge of the drainage course and progress toward the center. On super-elevated curves or shoulders, begin rolling on the lower edge and progress toward the higher edge.

   b. For a Type II aggregate drainage course, roll when the moisture content of the material is at or near the optimum moisture.

   c. Roll until the surfaces of each layer are uniformly compacted.

   d. Compact the final layer with a steel wheel roller weighing no less than 10 tons (9 Mg) or a vibratory roller approved by the Engineer.

   e. If a layer is deficient in required thickness by more than 3/4 in (19 mm), scarify the surface and add more material to the thin area. Compact again according to the Specifications.

B. Other Surfaces

1. Prepare the Area

   a. Before placing drainage material, excavate or trench low areas for positive drainage as directed by the Engineer.

b. Excavate trenches and undercutting to the dimensions and grades indicated on the Plans.

2. Drain the Area

   Drain unstable or wet areas when the area is in the subgrade or the original ground surface is an embankment area or a trench. Spread drainage material to the requirements on the Plans or as directed by the Engineer.

3. Compact the Material

   Compact drainage material until stable.

222.3.06 Quality Assurance

General Provisions 101 through 150.

222.3.07 Contractor Warranty and Maintenance

General Provisions 101 through 150.

222.4 Measurement

Aggregate drainage course is measured by the ton (megagram) or cubic yard (meter). When measured by the ton (megagram), the weight is determined by approved truck scales at the job site, or by other scales approved in advance. When measured by the cubic yard (meter), the loose volume is determined as specified in Section 109.

222.4.01 Limits

General Provisions 101 through 150.

222.5 Payment

Aggregate drainage course of the type specified will be paid for at the Contract Unit Price per ton (megagram) or per cubic yard (meter).

Payment will be made under:

Item No. 222	Aggregate Drainage Course, Type____	Per ton (megagram)
Item No. 222	Aggregate Drainage Course, Type ____	Per cubic yard (meter).
Item No. 573	Underdrain Pipe including Drainage Aggregate ____ in(mm)	Per linear foot (meter)

222.5.01 Adjustments

If the average thickness for any 1-mile (1600 m) increment exceeds the specified thickness by more than 1 in (25 mm), the Department will reduce the Contractor's payment for the excess material. The Department will calculate the excess material by multiplying how much average thickness exceeded the allowable 1 in (25 mm) tolerance by the surface area of the course.

Section 225—Soil-Lime Construction

225.1 General Description

This work includes preparing and treating roadbed materials with lime to form a base, subbase, or subgrade.

Water, mix, shape, and compact the necessary material according to these requirements and with the lines, grades, and thickness indicated on the Plans.

Lime treated roadbed materials, subbases, or bases will be designated as Class A, Class B, or Class C.

The requirements of these Specifications are applicable to each course or layer, unless otherwise indicated on the Plans.

225.1.01 Definitions

General Provisions 101 through 150.

225.1.02 Related References

A. Standard Specifications

Section 109—Measurement and Payment

Section 205—Roadway Excavation

Section 209—Subgrade Construction

Section 301—Soil-Cement Construction

Section 412—Bituminous Prime

Section 810 – Roadway Materials

Section 814 – Soil Base Materials

Section 821—Cutback Asphalt

Section 880—Water

Section 882—Lime

B. Referenced Documents

GDT 19

GDT 20

GDT 21

GDT 42

GDT 59

225.1.03 Submittals

General Provisions 101 through 150.

225.2 Materials

Ensure that the soil is suitable for lime stabilization and that the materials used for stabilization meet the following requirements:

Soil	Section 810 or Section 814, as applicable
Water	Subsection 880.2.01

Lime	Subsection 882.2.02
Bituminous prime	Subsection 821.2.01
Blotter material (sand)	Subsection 412.3.05.G.3

A. Soil

Use soil that consists of materials found in the roadbed, base, subbase, or added materials as specified or directed by the Engineer. Ensure that these materials meet the requirements shown on the Plans or the pertinent Specifications for these items.

Remove the following from the soil:

- Particles of aggregate too large to pass through a 3 in (75 mm) sieve
- Roots, stumps, grass turfs, and other vegetable matter

B. Water

Use water without detrimental quantities of oil, salt, acid, alkalis, sugar, or vegetable matter. Do not use water with total inorganic solids exceeding 0.20 percent. Test non-potable water prior to use and provide test results to the Engineer. Do not begin construction until the Engineer has approved the test results.

Test according to Subsection 880.2.01.

C. Lime

The application rate for lime will be determined from laboratory tests and provided to the Contractor prior to beginning stabilization work. Hydrated lime will be used in all tests.

D. Bituminous Prime

Use bituminous prime that consists of cutback asphalt of the following grades:

- RC-30
- RC-70
- RC-250
- MC-30
- MC-70
- MC-250

E. Blotter Material

Use blotter material (sand) that meets the requirements of Section 412.

225.2.01 Delivery, Storage, and Handling

General Provisions 101 through 150.

225.3 Construction Requirements

225.3.01 Personnel

Ensure that adequate protection and safety equipment and training is provided for all personnel.

225.3.02 Equipment

A. General Equipment

Use equipment of the right size, in satisfactory mechanical condition that can produce satisfactory results. Provide a list of proposed equipment to the Engineer prior to the beginning of construction. Provide any necessary equipment, including:

- Mechanical spreaders capable of uniformly distributing bulk lime or lime slurry to the actual application rate as shown in the Plans. Do not distribute dry lime by pneumatic pressure.
- Equipment capable of continuously mixing materials to a homogeneous blend and to a consistent depth. Weight all rollers sufficiently to accomplish the required compaction.
- Rotary-type soil mixers capable of mixing to a minimum depth of 12 inches (300 mm) and capable of injecting mix water directly into the mixing chamber with automatic sensors to monitor water application and mixing depth.
- Equipment for applying water and prime. Use a type and weight of equipment that will not damage lime-treated soil.

Do not begin construction until the Engineer has approved the proposed equipment.

B. Alternate Equipment

Alternate equipment, such as continuous or batch-type central plant or traveling mixing plants, will be approved if the equipment produces a mixture that meets this Specification.

225.3.03 Preparation

A. Prepare for Soil-Lime Construction

Prepare for soil-lime construction as follows:

1. Grade and shape the underlying foundation to the required lines, grades, and cross-section.
2. Compact the foundation to the required density specified in Subsection 225.3.05.F, “Compact Lime Layer” and Subsection 225.3.06.B, “Finishing Requirements.”
3. Dry the foundation if necessary.
4. Ensure that the foundation is firm and can support the construction and compaction equipment without displacement.
5. Stabilize any soft or yielding material. If necessary, repeat this step (at no additional cost to the Department) before placing each subsequent layer.
6. Scarify and partially pulverize each layer of material to be treated to the necessary depth.
7. Remove all detrimental material from the soil according to Subsection 225.2, “Materials.”

B. Test Section

The first section of each mixing operation will be a test section. The length of the test section will be the length required to use all of the lime on one truck.

Demonstrate the acceptability of the equipment and methods used and provide a standard by which to ensure the finished grade elevation and compacted thickness with this method.

1. If necessary, change the equipment, methods, or initial grade elevations based on results of the test section.
2. If changes in methods or equipment are made during the Project, construct additional test sections when directed by the Engineer.

225.3.04 Fabrication

General Provisions 101 through 150.

225.3.05 Construction

Lime-treated roadbed materials, subbases, or bases will be designated as Class A, B, or C, as follows:

A. Class A Treatment

Apply the specified percentage of lime in two equal increments according to the following steps:

1. Spread the first increment of lime.
2. Mix the material.
3. Allow the material to mellow for a minimum of 12 hours and a maximum of 72 hours.
4. Spread the second increment of lime.
5. Mix the material.
6. Compact and finish the material. See Subsection 225.3.05.F, “Compact Lime Layer,” for compaction and Subsection 225.3.06.B, “Finishing Requirements,” for finishing.

B. Class B Treatment

Apply the specified percentage of lime according to the following steps:

1. Spread the lime.
2. Mix the material.
3. Allow the material to mellow for a minimum of 12 hours and a maximum of 72 hours.
4. Mix the material.
5. Compact and finish the material. See Subsection 225.3.05.F, “Compact Lime Layer” for compaction and Subsection 225.3.06.B, “Finishing Requirements” for finishing.

C. Class C Treatment

Apply the specified percentage of lime according to the following steps:

1. Spread the lime.
2. Mix the material.
3. Compact and finish the material. See Subsection 225.3.05.F, “Compact Lime Layer” for compaction and Subsection 225.3.06.B, “Finishing Requirements” for finishing.

D. Apply Lime

1. General
   - Apply lime according to the rate specified by the Engineer.
   - Apply lime uniformly so that the quantity applied does not vary more than +/- 10 percent of the quantity specified for each section.
   - Apply lime only to areas that can be mixed in one day.
   - Do not mix lime with frozen soils or with soils containing frost. Perform lime stabilization only when the air temperature is above 45 °F (7 °C) and only between April 1 and October 15, unless directed otherwise by the Engineer.
   - Distribute lime at the specified rate by making repeated passes over a section until the required amount has been spread.

- After each pass, incorporate the material into the soil with mixing equipment. If necessary, add more water to the mix to accelerate mellowing.

2. Protect and Ensure Safety

   - Provide the necessary equipment and take the necessary precautions to protect operations personnel from the hazards of lime dust or slurry.
   - Prevent damage, discomfort, or inconvenience to the public or to private property while preparing and distributing lime.

3. Methods

   Spread lime on scarified areas at the specified rate. Distribute the material uniformly to avoid excessive loss.

   Choose one of the following three methods to apply lime:

   a. Dry Application with Quicklime

      Adjust the design application rate that was based on using hydrated lime, to reflect the properties of quicklime. Use the following formula to determine the application rate for quicklime:

      $$AR_Q = \frac{AR_H}{(1.32)(P)}$$

      where;

      AR_Q = Application Rate For Quicklime

      AR_H = Design Application Rate Based On Hydrated Lime

      1.32 = Ratio of molecular weights for hydrated lime (74) and quicklime (56)

      P = Certified Percent Purity Of The Quicklime

      Do not apply quicklime if the Engineer determines that wind conditions could make blowing lime hazardous to traffic, workers, or adjacent property.

      Minimize lime pockets by applying lime to shaped and rolled areas that are relatively smooth. Spread uniformly at the specified rate using a mechanical spreader approved by the Engineer.

   b. Slurry Made with Hydrated Lime

      Create a lime slurry by mixing 30 percent dry lime solids, by weight, with 70 percent water. Mix slurry in agitating equipment, and continue to agitate until arriving at the roadbed. Spread slurry on the scarified area with distributing equipment.

   c. Slurry Made by Slaking Quicklime

      Create a lime slurry by slaking quicklime using special equipment at or near the Project site. Obtain the Engineer's approval for all equipment and procedures before work begins

E. Mix Lime

1. General

   Maintain the moisture content of the material at its specified optimum or not more than 5 percent over the optimum, at all times.

   Add water during mixing if necessary, even if the material has the optimum moisture content to sustain the chemical reaction between lime and water.

   Mix the material the same as for "Dry Application" or "Slurry Application" unless indicated otherwise.

   a. Immediately after applying the lime:

      1) Mix to the required depth and width.

      2) If the depth to be treated, as shown on the Plans, is more than 12 in (300 mm) compacted, treat in approximately equal layers of not more than 12 in (300 mm) deep.

3) When multi-layer construction is required, blade the upper layers of the compacted soil in windrows outside the area to be treated until the lower layer is mixed, compacted, and approved by the Engineer.

4) Blade each successive layer back into place, shape and treat it with lime, mix, compact and shape to typical section. Include the cost of this manipulation in the bid price.

b. Control scarifying and mixing to provide uniform depth. Make the crown of the undisturbed soil underneath conform as closely as possible to the crown of the finished course.

c. Until the lime is incorporated or mixed, allow only spreading, watering, or mixing equipment to drive over the section being processed.

d. Determine bulking factors from the dry weight of laboratory-tested raw and lime treated soils. Furnish a finished course of lime treated material that conforms to the specified thickness and surface requirements in the Plans.

2. Mix Lime (Initial)

a. Class A or Class B Lime Treatment

1) Incorporate lime and water with rotary mixers until uniform. The mixture must pass through a 2 in (50 mm) sieve.

2) Add the amount of water necessary to produce a moisture content of no less than 0 percent below the mixture's optimum moisture content or no more than 5 percent above optimum moisture content. See GDT 19.

3) After mixing is complete, reshape the treated course to the approximate line, grade, and typical section.

4) Seal with a light, pneumatic-tired roller and other approved equipment, as necessary.

5) Mellow for a minimum of 12 hours and a maximum of 72 hours.

b. Class C Lime Treatment

1) Incorporate lime and water with rotary mixers until uniform. Continue to mix and add water until obtaining a homogeneous mixture of soil, lime, and water that is satisfactory to the Engineer.

2) After mixing and applying water, ensure that 100 percent of the material by dry weight passes a 1.0 in (25 mm) sieve and 60 percent by dry weight passes a No. 4 (4.75 mm) sieve.

3. Mix and Pulverize Lime (Final)

The following applies to Class A and Class B lime treatments only.

a. After the required mellowing period, scarify the layer.

b. After a Class A treatment, add the second application of lime.

c. Remix the layer as prescribed in the initial mixing operations, adding water as necessary.

d. Continue mixing until 100 percent of the material by dry weight, exclusive of gravel and stone, passes a 1.0 in (25 mm) sieve and 60 percent passes a No. 4 (4.75 mm) sieve.

e. Ensure that the percent of moisture is at or above the laboratory specified optimum moisture.

f. If mixing cannot be completed in one day, seal the surface of the layer with a rubber-tired roller. Continue the process the next day, weather permitting.

F. Compact Lime Layer

Compact the material according to the following requirements and to Subsection 225.3.06.B, "Finishing Requirements" for finishing.

1. Class A and B Lime Treatments

Compact the mixture within 4 hours after completing the final mixing. Maintain the material at a moisture content within ±2 percent of optimum.

2. Class C Lime Treatment

   Compact the mixture immediately after completing the first and only mixing. Maintain the material at a moisture content within ±2 percent of optimum.

3. Class A, B, and C Treatments

   a. Complete compaction operations during one working day.

   b. Keep the moisture content of the material uniform when compacting. Maintain the material at optimum moisture content or up to two percent over the optimum content.

   c. Compact uniformly and continuously, beginning at the bottom. Use sheepsfoot-type rollers. Continue until the entire depth of the mixture is compacted to the required density specified in Subsection 225.3.06.A.

   d. Immediately correct depressions or soft spots that develop in the compacted areas with the following methods:

      1) Scarify the area.

      2) Add lime when required.

      3) Remove the material when required.

      4) Reshape and compact.

   e. Stop compaction and remove the sheepsfoot-type roller when a layer of loose soil not exceeding 1 in (25 mm) remains.

   f. In addition to the requirements specified for density, compact the full depth of the mixture to the extent necessary for it to remain stable under construction equipment.

G. Cure Lime (Final)

1. General

   a. After the lime-treated soil has been finished as specified in Subsection 225.3.06.B, keep it moist for 7 days.

   b. Lime stabilized subgrade or embankment may be cured by applying water to maintain the course moist during curing.

   c. To protect a lime-stabilized base, subbase, or shoulder course, apply bituminous prime material (see Subsection 225.2.D) according to Section 412.

   d. Apply the prime as soon as possible, but not later than 24 hours after completing the finishing operations, unless delayed by wet weather. If delayed, apply prime as soon as the surface is sufficiently dry.

   e. Ensure the lime-treated soil surface is free of all loose and extraneous material and that it contains sufficient moisture to prevent excessive penetration of the bituminous material.

   f. If directed by the Engineer, sweep the lime-treated soil clean of loose material before applying the prime.

2. Apply the Prime

   a. Apply the bituminous material uniformly to the surface of the lime-treated soil at the rate of 0.15 to 0.30 gal/yd² (0.70 to 1.4 L/m²).

   b. Properly maintain the material during the entire curing period so that all of the lime-treated soil will be covered effectively during this period.

   c. Complete curing prior to placing subsequent layers of material.

3. Protect Lime Layer

   a. If necessary, open completed sections of the lime-treated soil to lightweight local traffic. Make sure the curing is not impaired and that the treated sections have hardened sufficiently to prevent marring or distorting the surface.

   b. Use construction equipment on the lime-treated soil only to discharge material into the spreader during base or paving operations or except as may be permitted for embankment construction.

225.3.06 Quality Acceptance

A. Density Requirements

After shaping the mixture to line, grade, and cross- section specifications, roll the course until uniformly compacted as determined by GDT 19. Use the percentages of maximum dry density in the following table. Determine the in-place density according to GDT 20, GDT 21, or GDT 59, as applicable.

All base, subbase, or shoulder courses	100%
Top 1 ft (300 mm) of embankment (subgrade)	100%
To within 1 ft (300 mm) of the top of the embankment	95%

B. Finishing Requirements

Ensure that the surface of the completed lime-stabilized layer conforms to the lines, grades, and cross- sections shown on the Plans or established by the Engineer and meets the following characteristics:

- Uniform lime mixture
- Smooth
- Dense
- Well-bonded
- Unyielding
- Free of cracks or loose material

Ensure that surface requirements meet the following Specifications:

Subgrade	Subsection 209.3.05.E.
Base, subbase, or shoulder course	Section 301

C. Thickness

If necessary, reconstruct the course or add lime to the course at no additional cost to the Department.

1. Determine the thickness of the lime-stabilized layer, according to GDT 42, at intervals not to exceed 500 ft (150 m).
2. Do not allow the thickness of the entire layer to vary more than 1 in (25 mm), plus or minus, from the thickness shown on the Plans.
3. Immediately reconstruct any section deficient by more than 1 in (25 mm) according to this Specification and the Plans.
4. Add additional lime to correct the deficiency of any section exceeding the 1 in (25 mm) tolerance. Remix to the specified depth and width according to this Specification and the Plans.

225.3.07 Contractor Warranty and Maintenance

Perform the following work at no cost to the Department. Repeat this work as often as necessary to keep the lime-treated soil intact.

- Maintain the lime-treated soil in good condition until The Work is completed and accepted.
- Maintain a smooth surface on the course by blading.
- Immediately repair any defects that occur.

225.4 Measurement

A. Soil-Lime Material

If it is necessary to add other material to the roadbed, or to build the base or subbase entirely with new material, soil-lime material is measured by loose volume cubic yard (meter), as specified in Section 109.

B. Soil-Lime Treated Roadbed, Subbase, and Base Course

If payment is specified by the square yard (meter), soil-lime treated roadbed, subbase, and base course are measured with the methods used for soil-cement specified in Section 301.

C. Lime

- Lime is measured by the ton (megagram).
- If quicklime (Ca0) is slaked on the job in an approved mixing tank to produce a lime slurry, the pay quantity for lime is measured in ton (megagram) of hydrated lime. The pay quantity is calculated using the certified lime purity for each truckload as follows:

  Total Weight of Hydrated Lime Produced, ton (Mg) = (A x B x 1.32) + A (C)

  Where:

  A = actual quicklime delivered

  B = certified % purity

  C = % inert material

  1.32 = ratio of molecular weights for hydrated lime (74) and pure quicklime (56)
- If quicklime is spread on the roadbed in a dry application, it is measured by the ton (megagram) based on invoice weight.
- The formula for converting quicklime to hydrated lime does not apply for dry applications.

D. Prime

Bituminous prime is not measured for separate payment. Application will be according to Section 412.

E. Unsuitable Material

Unsuitable materials removed from the roadbed are measured according to the Earthwork Item in the Contract.

225.4.01 Limits

General Provisions 101 through 150.

225.5 Payment

A. Soil-Lime Material

If material is mixed on the job, it may be necessary to add other materials to the roadbed or to build up the base or subbase entirely with new materials. Any additional soil-lime material will be paid at the Contract Price per square yard (meter) or per cubic yard (meter) when in place and accepted.

Payment will be full compensation for the following:

- Shaping and compacting the existing roadbed
- All materials except lime
- Loading and unloading materials
- Hauling materials

- Crushing, processing, mixing, spreading, watering, compacting, and shaping materials
- Maintenance
- All other incidentals necessary to complete the work

B. Soil-Lime Treated Roadbed Base and Subbase Course

A course of soil-lime treated roadbed base and subbase will be paid for at the Contract Price per square yard (meter) when in place and accepted. Payment will be full compensation for the following:

- Preparing the roadbed
- Mixing on the road
- Shaping, pulverizing, watering, and compacting materials
- Repairing all defects
- Maintenance

C. Pre-mixed Soil-Lime Treated Base and Subbase Course

A course of pre-mixed soil-lime treated base and subbase will be paid for at the Contract Price per ton (megagram) or per square yard (meter) when completed, in place and accepted.

Payment will be full compensation for the following:

- Shaping and compacting the existing roadbed
- All materials except lime
- Loading and unloading materials
- Hauling materials
- Crushing, processing, mixing, spreading, watering, compacting, and shaping materials
- Maintenance
- All other incidentals necessary to complete the work.

D. Lime

Only lime in the finished course or courses will be paid at the Contract Price per ton (megagram). Payment will be full compensation for furnishing, hauling, and applying the material.

Payment will be made under:

Item No. 225	Soil-lime material—including material and haul	Per cubic yard (meter)
Item No. 225	Soil-lime treated (roadbed, base, subbase or shoulder course), class ____, thickness____	Per square yard (meter)
Item No. 225	Lime	Per ton (megagram)

225.5.01 Adjustments

No payment will be made for lime used to correct defects due to faulty equipment or negligence.

Payment will not be made for any lime spread and exposed for four hours or more prior to mixing. Treat such areas again with the full required rate of application.

Add lime, at no additional cost to the Department, to any section on which washing or blowing prior to mixing caused excessive lime loss.

Reconstruct areas, at no cost to the Department, on which lime-treated soil was constructed but not covered with a layer of pavement, base, or other construction material during the same construction season.

The Engineer will test each section as it is completed. Scarify, moisten, rework, and compact any section with a density less than the specified requirements according to the requirements of these Specifications and at no additional cost to the Department.

No payment will be made for lime application exceeding the 10 percent plus tolerance. When the quantity applied is deficient by more than 10 percent, apply additional lime prior to mixing at the Contractor's expense.

Section 228—Grading – Modified

228.1 General Description

Specifications for this work will be included elsewhere in the Contract.

Section 230—Lump Sum Construction

230.1 General Description

Specifications for this work will be included elsewhere in the Contract.

Section 231—Miscellaneous Construction, Unpaved Roads and Streets

231.1 General Description

Specifications for this work will be included elsewhere in the Contract.

Section 232—Railroad Construction

232.1 General Description

Specifications for this work will be included elsewhere in the Contract.

Section 233—Haul Roads

233.1 General Description

This work includes maintaining and repairing haul roads that are county roads and city streets within the State of Georgia. Haul roads on the State Highway System are not included.

233.1.01 Definitions

Haul roads: Routes used for transporting materials to a Project. Haul roads include routes described in the Contract and alternate routes approved by the Engineer.

233.1.02 Related References

A. Standard Specifications

Section 109—Measurement and Payment

Section 209—Subgrade Construction

Section 317—Reconstructed Base Course

Section 400—Hot Mix Asphaltic Concrete Construction

Section 412—Bituminous Prime

Section 413—Bituminous Tack Coat

Section 424—Bituminous Surface Treatment

B. Referenced Documents

Form HD-561

Form HD-561A

233.1.03 Submittals

If substituting a different road for a haul road designated in the Contract, conduct an inspection of the proposed haul road in conjunction with the Engineer and the governmental agency or political subdivision charged with the control and maintenance of the route.

- After the inspection, prepare an agreement using Form HD-561A, which states existing conditions, maintenance conditions during hauling, and restoration after hauling is completed.
- Sign the agreement together with the governmental agency or political subdivision.
- Submit the agreement for the Engineer's approval before hauling materials on the proposed route.

233.2 Materials

Restore haul roads with materials that meet the requirements of the following Specifications:

Material	Section
Stabilizer Aggregate (Type I)	209
Reconstructed Base Course	317
Asphaltic Concrete	400
Bituminous Prime	412
Bituminous Tack Coat	413
Bituminous Surface Treatment	424

If any of the above materials are specified in the original Contract under a modified Specification, furnish materials for haul road maintenance and restoration under the same modified Specification.

233.2.01 Delivery, Storage, and Handling

General Provisions 101 through 150.

233.3 Construction Requirements

Maintain the haul road to the Engineer's satisfaction during hauling.

233.3.01 Personnel

General Provisions 101 through 150.

233.3.02 Equipment

General Provisions 101 through 150.

233.3.03 Preparation

The Department will determine sources of local materials and commercially produced aggregates and which haul roads exist for transporting the materials.

233.3.04 Fabrication

General Provisions 101 through 150.

233.3.05 Construction

A. Restoration Requirements

When hauling operations are completed, restore the haul road to a condition equal to that which existed before hauling operations were started.

- The Engineer will determine the kind and amount of restoration work required and the procedures and requirements to follow.
- An obligation to maintain and restore the road will not be relieved in the event that other traffic uses the haul road concurrently.
- If another contractor who is also under contract with the Department hauls material over the same route, the Engineer will determine the amount of maintenance and restoration obligation for each contractor.

233.3.06 Quality Acceptance

A. Inspection

When the restoration work on a haul road is completed, a joint inspection of the haul road route will be made under the jurisdiction of a governmental agency or political subdivision other than the Department.

- Inspect the road in conjunction with the Engineer and the governmental agency or political subdivision charged with the control and maintenance of the restored road.
- The Engineer will obtain two copies of the executed Haul Road Release, part of Form HD-561 or HD-561A.
- If using a substitute road, the Contractor must obtain the forms specified above and submit them to the Engineer.

233.3.07 Contractor Warranty and Maintenance

General Provisions 101 through 150.

233.4 Measurement

Materials ordered by the Engineer for maintaining and restoring haul roads are measured as defined in the applicable section of the Specifications.

If using a substitute haul road, materials are measured for payment according to the quantities shown on the Plans for the original haul road. Quantities of materials used above those shown on the Plans will not be measured for payment.

Blading and shaping costs necessary for maintaining and restoring haul roads are not measured for payment.

233.4.01 Limits

General Provisions 101 through 150.

233.5 Payment

Stabilizer aggregate will be paid for under the requirements of Section 209.

All materials, measured as stated above, will be paid at the Contract Price for the Items shown on the Plans and listed in the Proposal.

When the Engineer orders materials other than those listed above, they will be paid on a force account basis under Subsection 109.05, "Extra Work."

233.5.01 Adjustments

General Provisions 101 through 150.

Section 300—General Specifications for Base and Subbase Courses

300.1 General Description

This Specification applies to all base and subbase courses, except asphaltic concrete. Additional requirements for each type of base and subbase are described in the appropriate Sections for specific base and subbase type construction.

300.1.01 Definitions

General Provisions 101 through 150.

300.1.02 Related References

A. Standard Specifications

Section 106—Control of Materials

Section 107—Legal Regulations and Responsibility to the Public

Section 109—Measurement and Payment

Section 150—Traffic Control

Section 152—Field Laboratory Building

Section 160—Reclamation of Material Pits and Waste Areas

Section 205—Roadway Excavation

Section 206—Borrow Excavation

Section 209—Subgrade Construction

Section 301—Soil-Cement Construction

Section 302—Sand-Bituminous Stabilized Base Course

Section 310—Graded Aggregate Construction

Section 316—Cement Stabilized Graded Aggregate Construction

Section 412—Bituminous Prime

Section 831—Admixtures

B. Referenced Documents

Form OMR-TM-141 Daily Truck Weights

Form 474 Tally Sheet

300.1.03 Submittals

General Provisions 101 through 150.

300.2 Materials

Find the Specifications for materials to be used and the references for them under the appropriate Section for each base and subbase type construction.

Ensure that each material meets the requirements for the type specified. Incorporate only materials that meet the Engineer's approval.

Admixtures meeting the requirements of Subsection 831.2.03 and approved for use in stabilized bases or subbases shall be governed by the requirements as outlined in Laboratory Standard Operating Procedure No. 5, Quality Control of Portland Cement and Blended Hydraulic Cements and Quality Control of Fly Ash and Granulated Blast-Furnace Slag.

A. Selecting Local Materials at the Source

The Engineer has the authority to classify materials at the source and require the materials to be excavated in the proper sequence so that each kind will reach its destination at the best location for that material in the finished work. The Engineer has the authority to reject any unsuitable materials.

B. Sources of Local Materials Outside the Right-of-Way

Follow the provisions of Subsection 106.10, "Local Material Sources" to obtain materials from local sources outside the right-of-way.

300.2.01 Delivery, Storage, and Handling

A. Storing at Central Mix Plants

Store material at a plant site with enough space for separate stockpiles, bins, or stalls for each size of aggregate. Keep aggregates separated until delivery to the plant feeders for proportioning. Keep the storage yard neat and the stockpiles, bins, and stalls accessible for obtaining samples.

300.3 Construction Requirements

300.3.01 Personnel

Supply all personnel and equipment necessary for obtaining samples from base plants and delivering them to the plant laboratory.

300.3.02 Equipment

Ensure that all equipment for constructing base and subbase courses is of an approved design and in satisfactory condition before construction begins. The equipment required for each type of base or subbase will be determined according to the construction method used.

A. Central Mix Plants

The central mixing plant will not be approved for proportioning, batching, or mixing unless a field laboratory meeting the requirements of Section 152 is available for the exclusive use of the Engineer or Inspector.

Design, coordinate, and operate plants so that the mixture is produced within the specified tolerances. The requirements are as follows.

1. Scales

Before any mixture is delivered to the Project, check all scales with standard weights for accuracy and for agreement with each other.

If weight proportioning is used, provide accurate scales so all ingredients of the mixture can be weighed separately. Use scales that are accurate to within 0.5 percent of the measured load. Support scales with rigid supports so that vibration from the plant does not interfere with accurate readings.

a. Weight Box and Hopper Scales

Use springless dial scales of a standard make and design for weight boxes and hopper. Inspect and seal scales when the Engineer determines it necessary to assure accuracy. Ensure that at least ten 50 lb. (25 kg) weights are available for testing the scales.

b. Motor Truck Scales

With each plant, include a motor truck scale with a platform large enough to accommodate the entire length of any vehicle used. Ensure that the scale is certified according to Section 109 and is large enough to weigh the largest anticipated load. Do not measure weights greater than the rated capacity of the scales.

Ensure that the weights of the aggregate batches in the truck before delivery to the Project are within two percent of the sum of the weights of the batch ingredients.

Complete Forms OMR-TM-141 (Daily Truck Weights) and Form 474 (Tally Sheet) for each day's production and submit them to the Engineer.

2. Mixer

Equip each central mix plant with an approved mixer.

If Portland cement is required, begin mixing immediately after the cement is added to the coarse aggregate and soil mortar. Continue mixing until a homogeneous and uniform mixture is produced.

If the equipment does not produce a homogeneous and uniform mixture that meets these Specifications, the Engineer will require the Contractor to make the changes necessary to accomplish this result.

Any adjustments made to the charge in a batch mixer or the rate of feed to a continuous mixer must ensure a complete mix of all of the material.

Correct dead areas in the mixer where the material does not move or is not sufficiently agitated, by reducing the volume of material or by making other adjustments.

3. Mixture Proportioning

Add Portland cement, bituminous materials, aggregates, or other ingredients in such a manner that they are uniformly distributed throughout the mixture during the mixing operation.

4. Water Proportioning

In all plants, proportion water by weight. Provide a means for the Engineer to verify the amount of water per batch or the rate of flow for continuous mixing.

Use spray bars to evenly distribute moisture throughout the mixture.

5. Sampling

Use sampling equipment approved by the Engineer to obtain samples before combining them with other ingredients or introducing them into the mixer.

Use sampling equipment to provide an accurate representation of the furnished material.

6. Additional Requirements for Continuous-Mixing Plants

a. Feeder System

Continuous mixing plants shall use a feeder system that accurately proportions aggregate from each bin by weight.

Equip each feeder with a device that can change the quantity of material being fed. Use a feeder with adjustments that can be securely fastened.

Ensure that the plant has an interlocking system of feeders and conveyors that can be synchronized to supply a continuous flow of aggregate, including a positive flow of dry and liquid additives for mixing.

Provide an electronic belt-weighing device to monitor the combined aggregates. Ensure that there are meters for maintaining the aggregates and additives at varying production rates.

Use an electronic control package capable of tracking which accepts a signal from the belt-weighing device and signals to continuously vary the dry and liquid additive feeder speed and maintain the feed rate.

Proportion dry additives with a gravimetric (depleting weight) system meeting the following requirements:

- The dry additive gravimetric (depleting weight) system includes an isolation vessel supported by load cells independent of the fines silo.
- Use load cells in conjunction with an electronic scale package having remote digital display and the necessary controls. Continuously weigh the material being metered with a positive displacement feeder mounted on the discharge of the isolation vessel.

b. Control System

Use a control package that has a plant interlock shutdown capability. Plants must be able to shut down if actual flow rates differ from desired flow rates excessively. If the flow rate deviates excessively, an alarm shall sound at any of the aggregate, dry additive, or liquid additive metering devices.

Provide a monitoring station to control the entire operation that shows continuous quantitative data on the production and proportioning of the mix ingredients.

c. Portable Power Units

Equip plants that use portable electric power generators with a frequency meter (graduated and accurate to one hertz) and a voltmeter (graduated and accurate to two volts), installed in the power circuit.

d. Mixer

Use a mixer equipped with enough paddles or blades to produce a uniform and homogeneous mixture. Replace paddle blades that show more than 25 percent wear in the face area. Use paddles that can be adjusted to angular positions on the shafts and that can be reversed to retard the flow of the mix. Keep the mixer level.

e. Surge Hopper

Equip the mixer with a surge hopper. Use a surge hopper that automatically discharges the mixture when it reaches a predetermined level.

7. Additional Requirements For Batch-Mixing Plants

a. Weigh Box or Hopper

Use weigh boxes and hoppers that are suspended on scales, large enough to hold a full batch without spilling or needing hand raking, and equipped with a device for accurately weighing each size of aggregate.
Provide a convenient and accurate means of obtaining samples of aggregates from each bin before the material enters the mixing chamber. Equip each bin compartment with a bin level indicator that automatically stops weighing when a bin is empty.

b. Mixer

Include an approved, leak-proof batch mixer in the plant. Use a mixer fast enough or equipped with enough paddles or blades to produce a properly and uniformly mixed batch. Replace paddles and blades that show more than 25 percent wear in the face area.

c. Weighing Cement

Weigh cement on scales separate from the aggregate batching scales. Ensure that all scales meet the requirements of Section 109.

d. Proportioning Bituminous

Introduce bituminous material into the mixer through spray bars and weigh it on scales separate from the aggregate batching scales.

e. Control of Mixing Time

Use a time-locking device that automatically limits mixing time. Do not mix materials less than 30 seconds.

B. In-Place Mixers

For in-place mixing operations, use mixers that meet the following requirements:

1. Multiple Pass Mixers

   Use approved rotary-type multiple pass mixers with sufficient tines that mix cement, soil or soil-aggregate, and water uniformly for the full depth of the course.

2. Traveling Plant Mixers

   Use approved traveling mixing plants to pick up the aggregate, soil, or other materials from the windrow or roadway. Use plants equipped with a bottom shell or pan that pick up and mix the material while it is separated from the foundation material during at least 50 percent of the mixing cycle.

   Use plants that mix the material for the full depth of the section. Ensure that travelling plants move forward with successive increments the length and width of the roadbed so that the roadbed is compacted and finished in one operation. Ensure that none of the materials being mixed are lost or segregated.

   Use plants mounted on wheels or crawler tracks wide enough so that they will not rut or damage the mixed surface when loaded to capacity.

   Use plants with a pressurized metering device that introduces water during mixing.

   Ensure that devices for proportioning water and materials to be mixed accurately measures the specified amounts while the machine is in motion.

   For bituminous stabilization, use plants equipped with a metering device that accurately measures the bituminous material into the mixer within the tolerances specified in Section 302.3.05.B. Ensure that the meter indicator dial has a scale with divisions indicating gallons (liters).

   If mixing equipment does not produce a homogeneous and uniform mixture, make the changes necessary to produce this result, as required by the Engineer.

C. Mechanical Cement Spreader

When the material is to be mixed in-place, use an approved mechanical cement spreader to uniformly and accurately spread the cement. Do not use pneumatic tubes to transfer the cement from the tanker to the material to be stabilized.

D. Mixture Spreader

Use an approved mechanical spreader that meets the following requirements to uniformly spread the mixture:

- A height-adjustable strike-off plate to obtain the specified thickness of the finished base
- A self-propelled spreader with rollers to contact the truck tires and push the truck without skewing the spreader or truck
- A hopper large enough to prevent spilling or wasting the material

E. Static Rollers

Use static rollers that meet the following requirements. Use self-propelled static rollers on cement stabilized base.

1. Trench Roller

   In this context, “roller” describes a wheel made of a flat metal surface; “wheel” describes a rubber wheel of the automotive type.

   When base widening is specified, use at least one trench roller. Use a trench roller that has a guiding roller or wheel that operates in tandem with the compression roller on the area to be compacted or with the auxiliary wheel or roller.

   Ensure that the trench roller is equipped with an auxiliary wheel or roller, mounted on a height-adjustable axle. The contact surface of the auxiliary wheel or roller must be adjustable to at least 10 in (250 mm) above and 2 in (50 mm) below the rolling plane of the compression roller. If this adjustment is not sufficient to compact the subgrade to the Plan elevation, adjust the contact surface the necessary amount.

   If the steering roller or wheel operates in tandem with the auxiliary wheel or roller, it does not need to be height-adjustable.

Ensure that the auxiliary wheel or roller operates on the surface of the pavement adjacent to the area to be compacted, and at a distance from the edge of the pavement that no damage occurs. Keep the height adjustment of the auxiliary wheel or roller such that the compression roller will develop a smooth, compacted surface true to crown.

Use gas-propelled trench rollers equipped with reversing, smooth operating friction clutches. Ensure that friction clutches have smooth operating brakes of ample capacity. Use either hand-powered or power-operated steering devices.

The compression per inch (25 mm) width of compression roller shall not be less than 300 lbs (545 kg) and not greater than 365 lbs (660 kg). If necessary, use a hollow compression roller and secure the minimum weight with liquid ballast. The trench roller must compact a minimum width of at least 15 in (375 mm).

Fit rollers with adjustable spring scrapers that can scrape in both directions.

2. Steel-Wheel Rollers

   Use three-wheel or tandem steel-wheel rollers. Use self-propelled rollers equipped with cleaning devices to prevent material from adhering to the wheels.

   For base or subbase materials, use 3-wheel rollers on base or subbase materials that have a minimum weight of 10 tons (9 Mg) and a minimum compression of 325 pounds per inch (580 kg/100 mm) of width for the rear wheels.

   Use steel wheel tandem rollers with a minimum weight of 10 tons (9 Mg) and a minimum compression of 225 pounds per inch (400 kg/100 mm) of width for the rear drum.

3. Pneumatic-Tire Rollers

   Use pneumatic-tire rollers with a minimum contact pressure of 50 psi (345 kPa) per wheel.

   Equip rollers to uniformly distribute the load between all wheels.

   Use multiple axle, multiple wheel rollers with wheels staggered on the axles and spaces between each wheel to provide uniform compaction for the full compacting width of roller.

   Ensure that the air pressure of any tire does not vary more than 5 psi (35 kPa) from the established pressure.

   Operate rollers between 3 mph (5 kph) and 8 mph (13 kph), unless otherwise directed by the Engineer.

4. Sheepsfoot Rollers

   Use vibratory or static compaction sheepsfoot rollers of sufficient size and weight to obtain the desired compaction.

F. Vibratory Rollers

Use an approved vibratory roller designed to activate the frequency of vibration and the roller movement separately. Ensure that the weight and amplitude of the roller can compact the surface to Specifications with a minimum number of passes.

G. Bituminous Sampling Valve

Use bituminous transfer pumps that include a valve for sampling bituminous materials.

H. Fine Grading Machine

Specifications for the Fine Grading Machine are included in either a Special Provision or a Supplemental Specification in the Proposal or in the current Supplemental Specification book.

300.3.03 Preparation

A. Alternate Methods

When alternate methods of construction are provided without restriction, the Contractor may select these alternate methods at will, provided the equipment and organization are suited to the method selected. Before starting construction, discuss the proposed method with the Engineer. The method selected must:

- Spread base or subbase material uniformly without damaging the subgrade, subbase, or the material being placed

- Mix the materials until they are homogeneous
- Use the specified water and cement or bitumen content
- Compact throughout the depth of the course to the density specified
- Complete the work within the specified time limits

Organize the work and equipment so that spreading, compacting, and finishing the base or subbase is a continuous operation. Do not exceed minimum or maximum time limits where the detailed Specifications require them, except in unusual cases where permitted by the Engineer.

B. Preparing the Pit Site

Remove grass, weeds, roots, and other debris from local materials pits. Adhere to the requirements of Subsection 107.23, "Environmental Considerations" when performing this work. Include the cost in the prices bid for the pertinent Pay Items. This work is not considered as clearing and grubbing.

C. Preparing the Subgrade

If the subgrade does not meet the requirements of Section 209 for surface, compaction, and stability, repair all defective portions until it meets the requirements of that Section. Remove unsuitable materials and replace with acceptable material, if necessary. Compact the subgrade as specified in Section 209.

Have enough prepared subgrade meeting the requirements of Section 209 for at least one day of base construction before beginning work.

D. Preparing the Subbase

If a subbase is required, prepare it according to the requirements for surface and compaction. Ensure that it is stable enough to support the equipment that will place the base material without rutting or pumping. Repair all defective portions and replace any unsuitable material with acceptable material, if the subbase does not meet the requirements of the Specifications.

300.3.04 Fabrication

General Provisions 101 through 150.

300.3.05 Construction

A. Draining and Leaving Materials Pits

Keep materials pits well drained while materials are being removed from them. After removing materials, leave pits in the condition required by Section 106 and Section 160.

B. Mining and Mixing in a Pit

Mine all local materials pits within the pit boundaries and grid depths established by the Engineer.

Mine all materials from top to bottom. Mix materials in the pit before hauling to the roadbed or plant.

Place materials in windrows or stockpiles with a dragline or backhoe. Blend the gradation and moisture strata from each pit to a uniform mixture.

When a rim ditch is required and its depth exceeds the specified grid depth of soil-cement material, include only the material above the grid depth as base material. Use this material for the windrow or stockpile of material to be used for soil-cement base unless the Engineer determines that below-the-grid material is satisfactory.

Only use ladder pans and scrapers for stockpiling and windrowing in pits that are less than 18 in (450 mm) deep.

After the preliminary mixing, prevent the coarse materials from segregating from the fine materials with loading equipment that continues to blend the material.

C. Placing Materials

1. Mixture Control

   The Engineer will determine the proportions of the materials to be used in compounding the base or subbase. The Engineer will determine the analysis basis of the components.

   Change the mix, if required by the Engineer, to ensure that the finished base meets the requirements of these Specifications.

2. Moisture Control

   Control the moisture content according to the specified requirements for each type of base or subbase.

   Add water uniformly, allow it to evaporate or aerate, and roll the materials as often as necessary, to control the moisture content within the limits specified.

3. Number of Courses

   Because the maximum thickness of base or subbase materials to be mixed or spread in one course varies with the equipment used, it is subject to the Engineer's approval. Ensure that the thickness meets the requirements of Subsection 300.3.05.C.5, "Compaction."

4. Widening Work

   Ensure that widening work conforms to Section 150.

   When widening in traffic areas, excavate an area that can be completed in the same day.

   When widening pavement on which there is traffic on both sides, stagger operations to keep the widening trench open in one lane of traffic at a time.

5. Compaction

   Compact the entire thickness of all bases and subbases to the specified maximum dry weight per cubic foot (meter), as determined by the method specified in the Section for each base or subbase.

   If any base or subbase is more than 6 in (150 mm) thick, construct according to the following table for layer thickness:

Material	Layer Thickness
Topsoil, Sand-Clay, or Chert	Two equal layers, or one layer not to exceed 8 in (200 mm)
Graded Aggregate	Two equal layers, or one layer not to exceed 8 in (200 mm)
Cement Stabilized Graded Aggregate	Two equal layers, or one layer not to exceed 8 in (200 mm)
Cement Stabilized Soil Aggregate	Two equal layers, or one layer not to exceed 8 in (200 mm)
Sand Bituminous	Two equal layers, or one layer not to exceed 8 in (200 mm)
Soil-Cement	One layer not to exceed 8 in (200 mm)

D. Meeting Surface Requirements

Produce a smooth, uniform surface that complies with these Specifications.

Rebuild any areas that do not meet the requirements or remove or add material to the area until the Engineer approves of the Work.

300.3.06 Quality Acceptance

A. Monitoring Quality Control

Ensure that the mixture and the materials used meet the following quality controls:

- Before producing any mixture for the Project, calibrate the electronic sensors, devices, or settings for proportioning all mixture ingredients by scale weight. Calibrate in the presence of the Engineer, the proportioning of every ingredient for all rates of production.

- Maintain a dated, written record of the most recent calibration. Post the calibration at the base plant and make the record available for the Engineer's inspection at all times. Format records as graphs, tables, charts, or mechanically prepared data. If the material changes, the rate of production changes by more than +/- 20%, the plant is not producing base material for more than two weeks, or if a component affecting the ingredient proportions has been repaired, replaced, or adjusted, check and recalibrate the proportions.
- Verify the moisture of the mixture being produced. Perform checks on ingredient proportioning and verify truck weight as directed by the Engineer.

  Provide quality control personnel and all necessary equipment to perform and document moisture tests. Perform moisture tests at a frequency of at least one test per hour of base plant production.

B. Repairing Defects

During construction: If materials that do not meet these Specifications are placed on the roadway at any time during construction, remove and replace them with acceptable materials as a part of the Pay Item for the base or subbase being constructed.

After construction: Promptly correct defects discovered in the surface finish, thickness, or compaction of the completed base or subbase before The Work is accepted.

- If the base, subbase, or shoulders are deficient in thickness and it is determined that the subgrade elevation is high, remove the materials, lower the subgrade, and reconstruct the course, according to these Specifications at no cost to the Department.
- If job conditions permit and the Engineer mandates, correct areas deficient in thickness by raising the elevation of the surface or adding material to the course.
- In other cases, the Engineer may determine that the defective portions must be entirely removed. Add, mix, spread, and compact new material according to the Specifications and at no cost to the Department.
- If a surface is less than 3 in (75 mm) deep, scarify the area to a depth of at least 3 in (75 mm), except in the case of stabilized bases or subbases. Mix and compact the new and old materials.
- Repair stabilized bases or subbases according to Section 301, Section 302, Section 310, or Section 316, whichever is applicable.

300.3.07 Contractor Warranty and Maintenance

General Provisions 101 through 150.

300.4 Measurement

Base and Subbase courses will be measured in accordance with the Specification Section for the item.

Bituminous prime will not be measured for separate payment.

300.4.01 Limits

General Provisions 101 through 150.

300.5 Payment

Base and Subbase courses will be paid for in accordance with the Specification Section for the item. Include the cost of furnishing and applying bituminous prime in the Unit Price Bid for each individual Base Item according to the applicable provisions of Section 412.

No separate payment will be made for adding water or for aerating or rolling for the purpose of adding water. Include the cost of controlling moisture content in the prices bid for the pertinent Pay Items.

Separate payment will be made only for clearing and grubbing listed in the Proposal or required in the Plans and designated a Pay Item by the Engineer.

No separate payment will be made for stripping excavation unless shown on the Plans and included in the Proposal as a Pay Item.

300.5.01 Adjustments

If the Contractor for the subbase or base is responsible for the subgrade under another Pay Item, no additional payment will be made for any repairs made to the subgrade, except as provided in Section 209.

If another party (not the Contractor) is responsible for the subgrade, removing unsuitable materials will be paid for according to the Earthwork Item in the Contract.

Include compaction, scarification, and any other preparation necessary for the subgrade in the Unit Price Bid for the pertinent base course.

Section 301—Soil-Cement Construction

301.1 General Description

This work includes constructing a base, subbase, or shoulder course composed of soil, or a mixture of soils, and stabilizing with Portland cement. Construct according to these Specifications and conform to the lines, grades, and typical sections shown on the Plans or established by the Engineer.

The provisions in Section 300 apply to this Item.

301.1.01 Definitions

General Provisions 101 through 150.

301.1.02 Related References

A. Standard Specifications

Section 109—Measurement and Payment

Section 205—Roadway Excavation

Section 300—General Specifications for Base and Subbase Courses

Section 412—Bituminous Prime

Section 814—Soil Base Materials

Section 821—Cutback Asphalt

Section 830—Portland Cement

Section 831—Admixtures

Section 880—Water

B. Referenced Documents

GDT 19

GDT 20

GDT 21

GDT 59

GDT 67

GDT 86

AASHTO T 134

301.1.03 Submittals

Before constructing a test section, submit a Construction Work Plan to the Engineer for approval.

301.2 Materials

Ensure that materials meet the requirements of the following Specifications:

Material	Specification
Soil-Cement Material	Subsection 814.2.02
Portland cement	Subsection 830.2.01
Water	Subsection 880.2.01
Fly Ash and Slag	Subsection 831.2.03
Cutback Asphalt RC-30, RC-70, RC-250, or MC-30, MC-70, MC-250	Subsection 821.2.01
Blotter Material (Sand)	Subsection 412.3.05.G.3

When fly ash or slag is specified as a mixture in the soil-cement base, use fly ash or slag that meets the physical requirements of Subsection 831.2.03.

301.2.01 Delivery, Storage, and Handling

General Provisions 101 through 150.

301.3 Construction Requirements

A. General

1. Methods

   This Specification is based on the mixed-in-place and central plant mix methods. Supplement in-place or plant mixing with plow, harrow, or blade mixing when the Engineer permits.

   When the Plans and Proposal indicate that the material will be paid by the ton (megagram), use the central plant mixing method. If the work will be paid by the square yard (meter), the Plans and Proposal will indicate the required thickness and the mixing method to be used.

   When payment is made by the square yard (meter) and a roadway mixer is used, the Engineer will determine if the materials in the roadbed are suitable for use. If the Engineer approves, use materials in the roadbed without payment, except for the payment per cubic yard (meter) provided in Subsection 301.5.A, “Soil-Cement Material” below.

   If it is necessary to add other materials to those in the roadbed to meet the desired thickness or to modify the physical properties of the existing materials, these materials will be measured and paid by the cubic yard (meter).

2. Fly Ash and Slag

   Unless otherwise specified in the Contract, fly ash and slag shall be used only in central plant mix construction. Apply fly ash and slag to the mix according to the procedures for cement established in Subsection 300.3.02.A, “Central Mix Plants” and Subsection 301.3.05.A.4, “Cement.”

3. Weather Limitations

   Ensure the following:

   Mix and place cement-treated base or subbase only when the weather permits the course to be finished without interruption in the time specified.

   Mix and place materials only when the moisture content of the soil to be used in the mixture meets the limits specified in this Subsection.

   Begin mixing only when the air temperature is above 40 °F (4 °C) in the shade, and rising.

Ensure that the temperature of the soil to be used in the mixture and the subbase or subgrade is above 50 °F (10 °C).

4. Interruption of Work

   If the work is interrupted for more than two hours after cement has been added, or if rain increases the cement's moisture content outside the limits specified in Subsection 301.3.05.B.7.c, "Moisture Control," remove and replace the affected portion at no additional cost to the Department.

301.3.01 Personnel

Ensure that only experienced and capable personnel operate equipment.

301.3.02 Equipment

Use equipment that meets the requirements of Subsection 300.3.02 and this subsection. The Engineer will approve equipment type and condition before construction begins.

Provide sufficient equipment in good working condition to do the following:

- Allow continuous prosecution of the Work.
- Mix, place, and compact within the required time limits.

Use any applicable equipment specified in Subsection 412.3.02, "Equipment" for bituminous prime.

301.3.03 Preparation

A. Subgrade or Subbase Preparation

Prepare the subgrade or subbase as specified in Subsection 300.3.03.C, "Preparing the Subgrade" or Subsection 300.3.03.D, "Preparing the Subbase" if the base, subbase, or shoulders will be composed entirely of new materials, whether mixed-in-place or central plant mixed. In addition to the above requirements, ensure that subgrade material used underneath soil-cement base meets the sulfates and pH requirements of Subsection 814.2.02.A. Place materials only on dry, thawed subgrade or subbase.

301.3.04 Fabrication

General Provisions 101 through 150.

301.3.05 Construction

A. In-Place Mixing

1. Soil

   If additional soil is needed on the roadbed, place and spread the soil uniformly to the proper depth to obtain the specified thickness.

2. Pulverization

   Pulverize the roadbed materials as follows:

   a. Loosen and pulverize roadbed materials to the width and depth to be stabilized without disturbing or damaging the underlying subgrade.

   b. Continue pulverizing until 100 percent of roadbed material passes through a 1-1/2 in (37.5 mm) sieve, and until at least 80 percent of the soil, excluding any stone or gravel, passes through a No. 4 (4.75 mm) sieve.

   c. Add water to assist pulverization if necessary.

   d. Remove all roots, sod, and rocks that exceed 3 in (75 mm) in diameter.

   e. Remove all other harmful materials.

3. Moisture Adjustments

   Immediately before spreading cement, adjust the moisture content of the in-place material so it will stabilize to within 100 to 120 percent of optimum moisture (amount of moisture in the mixture at maximum dry density).

4. Cement

   Spread cement as follows:

   a. Uniformly spread the required amount of Portland cement with a cyclone-type mechanical spreader or its equivalent.

   b. Apply the Portland cement at a rate that ensures the pounds spread are within ±10 percent of the amount specified. Furnish a square-yard cloth, scales and personnel for checking the spread rate of cement placed.

   c. Apply cement on soils with a moisture content less than 120 percent of optimum.

   d. Apply cement on days when wind will not interfere with spreading.

   e. If the cement content is below the 10 percent limit in the mixing area, add additional cement to bring the affected area within the tolerance specified and recalibrate the mechanical spreader's spread rate. If the cement content is more than the 10 percent limit in the mixing area, the excess quantity will be deducted from the Contractor's pay for cement.

   f. Regulate operations to limit the application of cement to sections small enough so that all of the compacting and finishing operations specified in Subsection 301.3.05.B.7, "Compacting and Finishing" can be completed within the required time limits.

   g. Pass only spreading and mixing equipment over the spread cement. Operate this equipment so that it does not displace cement.

   h. Replace damaged cement at no additional cost the Department when damage is caused by:

      - Hydration due to rain, before or during mixing operations
      - Spreading procedures contrary to the requirements mentioned above
      - Displacement by the Contractor's equipment or other traffic

5. Mixing

   Mix the material as follows:

   a. Uniformly windrow the material if the mixing plant requires it. Otherwise, shape the material to the proper line, grade, and cross-section before mixing.

   b. Mix the material according to either roadmix method in Subsection 301.3.05.A.6, "Road Methods."

   c. Begin mixing as soon as practical after the cement is spread, and continue until a homogeneous and uniform mixture is produced. If the equipment does not produce a homogeneous and uniform mixture meeting these Specifications, make any necessary changes to meet the Engineer's requirements.

6. Road Methods

   a. Multiple Pass Mixing

      Perform multiple pass mixing as follows:

      1) After spreading the cement, mix it with the material to be treated.

      2) Ensure that the material has been adjusted for moisture as stated in Subsection 301.3.05.B.7.c, "Moisture Control."

      3) Continue mixing with successive passes until a uniform mixture of cement and soil, or soil-aggregate is obtained.

      4) Immediately after the preliminary mixing of cement and soil or soil-aggregate, add water as needed to maintain or bring the mixture to within the moisture requirements of Subsection 301.3.05.B.7.c, "Moisture Control."

      5) Uniformly mix the additional water to incorporate it into the full depth of the mixture.

   b. Traveling Plant Mixing

Perform traveling plant mixing as follows:

1) After spreading the cement, mix it with an approved traveling plant mixer.
2) Ensure that the mixer picks up the full depth of material from the windrow on the roadbed onto the bottom shell or pan.
3) Mix at a speed that ensures a uniform mixture of soil, cement, and water.
4) Apply water through a water-metering device on the plant to uniformly distribute the proper amount of water to the loose material on the shell or pan. Distribute the water so that cement balls do not form.
5) Continue to mix the cement and water so that all material to be treated is mixed at once.
6) Ensure that there is enough mixture to produce, after final compaction, a course within allowable tolerances.

7. Compacting and Finishing

   Compact and finish according to Subsection 301.3.05.B.7, “Compacting and Finishing”.

B. Central Plant Mixing

1. Soil

   Do the following:

   a. Before introducing any soil into the mixer, pulverize it until 100 percent passes a 1-1/ 2 in (37.5 mm) sieve.
   b. Ensure that at least 80 percent of the soil, excluding any stone or gravel, passes through a No. 4 (4.75 mm) sieve.
   c. Have enough stockpile material meeting the requirements of Subsection 300.3.05.B, “Mining And Mixing In A Pit” for at least one day of base construction before operations begin.

2. Cement

   Do the following:

   a. Measure cement by weight.

      Uniformly add cement into the mixture. The cement incorporated, per ton (megagram) of soil, shall be within ±5 percent of the amount prescribed by the Engineer.
   b. Perform cement checks that compare the actual percent cement in the mixture with the required percent cement specified in the approved Mix Design for the Project on each of the first two tankers supplying cement to the plant. If these checks are within the specified tolerance, one cement check per day will be required.
   c. Perform and make available to the Engineer a minimum of four daily comparison checks between the certified scales and the plant computer to ensure the proper percentage of cement is being incorporated into the mixture between cement checks.
   d. When a cement check is out of the specified tolerance, at least two, passing one-tanker checks, are required before returning to a one cement check per day basis. When three consecutive cement checks fail to meet the specified tolerance, discontinue soil-cement plant production. Correct the problem, and recalibrate the plant as specified in Subsection 300.3.06.A “Monitoring Quality Control” before resuming the work.
   e. When the cement content exceeds the specified tolerance, the Department will deduct the excess cement from the Contractor’s pay for cement. When the cement content does not meet the specified tolerance, the Engineer will evaluate the strength of the affected area after 7 days.
   f. Correct any areas of base with deficient strength as specified in the Strength Correction Chart at no additional cost to the Department, regardless of the percent of compaction. This correction also applies to the test section described in Subsection 301.3.05.B.7.a, “Test Section.”
   g. Quantities of cement used in calibrating the plant will also be deducted from the Contractor’s pay for cement.

3. Mixing

Do the following:

a. Measure proportions of soil, cement, and water separately and accurately before mixing.

b. Charge all materials into the mixer together. Begin mixing immediately.

c. Mix until a homogeneous and uniform mixture is produced. If the final blend of materials is not homogeneously mixed or does not meet the moisture range specified in Subsection 301.3.05.B.7.c, "Moisture Control," cease plant operations until corrections are made in the plant or to the materials.

4. Hauling

Do the following:

a. Deliver soil-cement material to the Project.

b. Spread soil-cement material so that compaction can begin within 45 minutes after the soil, cement, and water have been charged into the mixer.

c. Protect the mixture in transit by using a securely fastened waterproof cover large enough to extend down over the sides and the end of the bed of each haul vehicle.

5. Spreading

Spread the soil-cement mixture as follows:

a. Use an approved mixture spreader as specified in Subsection 300.3.02.D, "Mixture Spreader" to obtain the specified thickness. Spread the mixture the full width of the area to be covered.

b. Ensure that trucks and other construction equipment, including motor graders, do not travel over the material until compaction equipment has made initial passes over the mixture.

c. Ensure that less than 30 minutes elapse between the placement of cement-treated material in adjacent lanes at any location, unless longitudinal joints are specified.

6. Thickness of Course

Compact the soil-cement base to a maximum thickness of 8 in (200 mm). Place the full thickness in one course only and compact as specified in Subsection 301.3.05.B.7, "Compacting and Finishing" below.

7. Compacting and Finishing

a. Test Section

Construct a test section as follows:

1) Use the first section of each constructed soil-cement base course as a test section.

2) Use a test section between 350 ft (100 m) and 500 ft (150 m) long for the designated width.

3) Before constructing a test section, submit a Construction Work Plan to the Engineer for approval. The Construction Work Plan must indicate proposed equipment and compaction procedures.

4) If the Construction Work Plan is approved, the Engineer will evaluate the Work Plan during test section construction. The Engineer will evaluate compaction, moisture, homogeneity of mixture, thickness of course, and laminations or compaction planes (scabbing).

5) If the Engineer determines that the Work Plan is not satisfactory, revise the compaction procedure and augment or replace equipment, as necessary, to complete work according to the Specifications.

b. Time Limits

Observe the following time limits:

1) Begin compaction within 45 minutes of the time water is added to the soil-cement mixture.

2) Complete compaction within 2 hours.

3) Complete all operations in four hours, from adding cement to finishing the surface.

c. Moisture Control

Control moisture as follows:

1) During compaction, ensure a uniform moisture content of the mixture that is between 100 and 120 percent of the optimum moisture content.

2) If the moisture content exceeds the tolerance at any time, cease operations immediately and make the adjustments necessary to bring the moisture content within tolerance.

3) Do not use materials that "pump" under construction traffic, regardless of moisture content.

d. Additional Compaction Requirements

Perform the following additional compaction requirements:

1) Compact the soil-cement base, subbase, or shoulder course to at least 98 percent of the maximum dry density as determined in this Subsection.

2) Do not perform vibratory compaction on materials more than 1-1/2 hours old, measured from the time the cement was added to the mixture.

3) Uniformly compact the mixture and then fine-grade the surface to the line, grade, and cross-section shown on the Plans.

4) Loosened material accumulated during this process is considered waste and is to be removed from the Project. Do not use additional layers of cement-treated materials in order to conform to cross-sectional or grade requirements.

5) Use a pneumatic-tired roller to roll the finished surface until the surface is smooth, closely knit, free from cracks, and in conformance with the proper line, grade, and cross-section.

If the Engineer requires, lightly apply water to the finished surface to aid in sealing the completed base and preparing the surface for priming.

6) At any place inaccessible to the roller, secure the required compaction with mechanical tampers approved by the Engineer. The same compaction requirements stated in the above Subsection apply.

e. Additional Finishing Requirements

Perform the following additional finishing requirements:

1) Use the automatically controlled screed equipment when required by Subsection 300.3.03.H, "Fine Grading Machine" of the Specifications. Control fine-grading for this requirement with sensing wires or a taut stringline. Furnish, install, and maintain this operation as a part of this Pay Item. When automatically controlled screed equipment is not required, fine-grading with motor graders is permitted.

2) Fine-grade the surface of the cement-stabilized subbase for Portland cement concrete pavement or the cement-stabilized base for asphaltic concrete pavement.

3) Fine-grade immediately after placement and compaction. Roll the subbase again according to this Subsection.

8. Construction Joints

Form construction joints as follows:

a. Form a straight transverse joint at the end of each day's construction or when the work is interrupted so that the material cannot be compacted within the time limit specified in this Subsection.

b. Create the straight transverse joint by cutting back into the completed work to form a true vertical face free of loose or shattered material.

c. Form the joint at least 2 ft (600 mm) from the point at which the strike-off plate of the spreader comes to rest at the end of the day's work, or at the point of interruption.

d. Form a longitudinal joint as described above if the soil-cement mixture is placed over a large area where it is impractical to complete the full width during one day's work. Use the procedure for forming a straight transverse joint. Ensure that waste material is removed from the compacted base.

9. Prime

Apply bituminous prime to the finished surface of the base course at the end of each day or as soon as the Engineer determines it is practical. Apply prime only to an entirely moist surface.

If weather delays prime application, apply prime as soon as the surface moisture is adequate. Apply prime according to Section 412.

10. Opening To Traffic

No traffic or equipment is permitted to operate on the finished base, subbase, or shoulders until the prime has hardened enough so that it does not pick up under traffic. For the first seven days after priming, traffic is restricted to lightweight vehicles such as passenger cars and pickup trucks. Vehicles with an average axle load exceeding 20,000 pounds (9 Mg) will not be allowed on the finished base or subbase at any time.

Correct any failures caused by traffic at no additional cost to the Department.

11. Protection of Course

Maintain the base, subbase, or shoulder course constructed under these Specifications until the Engineer determines that it has sufficiently cured and is ready to be covered with the next base or pavement course. Make repairs specified in Subsection 300.3.06.B, "Repairing Defects" whenever defects appear. This preservation action does not relieve the Contractor of his responsibility to maintain The Work until final acceptance as specified in Section 105.

301.3.06 Quality Acceptance

A. Compaction Tests

Test compaction as follows:

1. Determine the maximum dry density for central plant mix construction from representative samples of the material to be compacted according to GDT19 (AASHTO T 134).
2. Determine the maximum dry density for mixed-in-place construction according to GDT 19 or GDT 67.
3. Determine the in-place density of the cement-stabilized base, subbase, or shoulders as soon as possible after compaction, but before the cement sets. Determine in-place density according to GDT 20, GDT 21, or GDT 59.

B. Finished Surface Tests

Test the finished surface as follows:

1. Check the finished surface of the cement stabilized base, subbase, or shoulder course transversely.
2. Place a 15 ft (4.5 m) straightedge parallel to the centerline. Additionally, use one of the following tools:
   - A template, cut true to the required cross-section and set with a spirit level on nonsuperelevated sections
   - A system of ordinates, measured from a stringline
   - A surveyor's level
3. Ensure that ordinates measured from the bottom of the template, stringline, or straightedge to the surface do not exceed 1/4 in (6 mm) at any point. Rod readings shall not deviate more than 0.02 foot (6 mm) from the required readings.
4. Correct any variations from requirements immediately, as specified in Subsection 300.3.05.D.

C. Tolerances

1. Thickness Measurements

a. Thickness requirements apply to shoulder construction where the Plans specify a uniform thickness, or where the shoulders will be surfaced. Do the following:

b. Determine the thickness of the base, subbase, or shoulder course, by making as many checks as necessary to determine the average thickness.

2. Deficient Thickness

a. If any measurement is deficient in thickness more than 1/2 in (13 mm), make additional measurements to determine the deficient area.

b. Correct any area deficient by more than 1/2 in (13 mm) to the design thickness by using one of the following methods according to these Specifications:

- Apply Asphaltic Concrete 9.5 mm Superpave.
- Remove material to the full depth of the course and reconstruct to the required thickness.

No payment will be made for any 9.5 mm Superpave asphaltic concrete applied to correct deficiencies nor will payment be made for removing and reconstructing the deficient work.

3. Average Thickness

Average thickness is measured as follows:

a. The average thickness per linear mile (kilometer) is determined from all measurements within the mile (kilometer) increments.

b. The average thickness shall not exceed the specified thickness by more than 1/2 in (13 mm).

If the unit of payment is by the ton (megagram) or cubic yard (meter), and the average thickness for any mile (kilometer) increment exceeds the allowable 1/2 in (13 mm) tolerance, payment for the excess quantity in that increment will be deducted.

c. The excess quantity is calculated by multiplying the average thickness that exceeds the allowable 1/2 in (13 mm) tolerance by the surface area of the base, subbase, or shoulder, as applicable.

4. Strength

Do the following:

a. Ensure that the strength of the soil-cement base, subbase, or shoulder course is at least 300 psi (2070 kPa), as determined from testing the unconfined compressive strength of cores from the completed course in accordance with GDT 86.

b. If a strength test falls below 300 psi (2070 kPa), do the following:

1) Isolate the affected area by securing additional cores.

2) Average all compressive strengths in the affected area to determine the basis for corrective work according to the table below or the Engineer's directions.

5. Compaction

The compaction requirement for soil-cement base, subbase, or shoulder course shall be a minimum of 98 percent of the specified theoretical density.

If any compaction test falls below 98 percent, core and retest the represented area for compressive strength determination after 7 days. If the strength is 300 psi (2070 kPa) or greater, no correction will be required. If the strength is less than 300 psi (2070 kPa), isolate the affected area by obtaining additional cores.

Average all compressive strengths in the affected area to determine the basis for corrective work, according to the following table.

Compressive Strength	Correction Work
300 psi (2070 kPa) or greater	None
200 psi (1380 kPa) to 299 psi (2069 kPa)	6 in & 8 in (150 mm & 200 mm) base—add 135 lbs/yd² (75 kg/m²) asphaltic concrete
Less than 200 psi (1380 kPa)	Reconstruct affected area

Ensure that a corrected area requiring asphaltic concrete is at least 150 ft (45 m) long.

Perform corrective work requiring asphaltic concrete or reconstruction at no additional cost to the Department.

301.3.07 Contractor Warranty and Maintenance

General Provisions 101 through 150.

301.4 Measurement

A. Soil-Cement Material

Soil-cement material is measured by the cubic yard (meter), loose volume, as specified in Section 109, during mixed-in-place construction if it is necessary to add materials to the roadbed or to build up the base, subbase, or shoulders with new material.

B. Soil-Cement Stabilized Base, Subbase, and Shoulder Course

Soil-cement stabilized base, subbase, and shoulder course are measured as follows:

1. The surface length is measured along the centerline when payment is specified by the square yard (meter). The width is specified on the Plans.
   a. Irregular areas, such as turnouts and intersections, are measured by the square yard (meter).
   b. Material is measured in tons (megagrams), as mixed and accepted, when payment is specified by the ton (megagram).

The actual weight is determined by weighing each loaded vehicle on a required motor truck scale as the material is hauled to the roadway. The actual weight will be the pay weight; no deduction will be made for the weight of the cement.

C. Portland Cement

Portland cement is measured by the ton (megagram).

D. Fly Ash and Slag

Fly ash and slag are measured by the ton (megagram) according to this Specification.

E. Prime

Bituminous prime is not measured for separate payment. Include the cost of furnishing and applying bituminous prime according to the provisions of Section 412 in the Unit Price Bid for each individual base item.

F. Unsuitable Material

Unsuitable materials that have been removed are measured and paid for according to the Earthwork Item in the Contract.

301.4.01 Limits

General Provisions 101 through 150.

301.5 Payment

A. Soil-Cement Material

Where in-place mixing is done, and when it is necessary to add other materials to those in the roadbed or to build up the base, subbase, and shoulders entirely with new materials, the added soil-cement material, in place and accepted, will be paid at the Contract Price per cubic yard (meter). Payment will be full compensation for soil-cement material; mixing in the pit; loading, hauling, and unloading; and spreading

B. Soil-Cement Stabilized Base, Subbase, and Shoulder Course

Where specified, soil-cement stabilized base, subbase, and shoulder course, in place and accepted, will be paid at the Contract Price per square yard (meter). Payment will be full compensation for roadbed preparation, mixing on the road, shaping, pulverizing, watering, compaction, defect repair, and maintenance.

C. Pre-mixed Soil-Cement Stabilized Base, Subbase, and Shoulder Course

Where specified, pre-mixed soil-cement stabilized base, subbase, and shoulder course, in place and accepted, will be paid at the Contract Price per ton (megagram) or square yard (meter).

Payment will be full compensation for roadbed preparation; all materials except Portland cement; loading, hauling, and unloading; mixing; spreading; watering; rolling and shaping; and maintenance.

D. Portland Cement

Portland cement will be paid at the Contract Price per ton (megagram). Payment is full compensation for furnishing, hauling, and applying the material. Only Portland cement incorporated in the finished course will be paid; no payment will be made for cement used to correct defects due to the Contractor's negligence, faulty equipment, or plant calibration error.

E. Fly Ash and Slag

Fly ash and slag will be paid at the Contract Price per ton (megagram), according to this Subsection. Payment will be full compensation for hauling and applying the materials. Only fly ash and slag incorporated into the finished course will be paid; no payment will be made for fly ash and slag used to correct defects due to the Contractor's negligence, faulty equipment, or plant calibration error.

Payment will be made under:

Item No. 301	Soil-cement material—including material and haul	per cubic yard (meter)
Item No. 301	Soil-cement stabilized base, subbase, and shoulder course ___in (mm)	per square yard (meter)
Item No. 301	Pre-mixed soil-cement stabilized base, subbase, and shoulder course—including material and haul	per ton (megagram) or per square yard (meter)
Item No. 301	Pre-mixed soil-cement stabilized base and shoulder course—including material and haul	per ton (megagram) or per square yard (meter)
Item No. 301	Portland cement	per ton (megagram)
Item No. 301	Fly ash and slag	per ton (megagram)

301.5.01 Adjustments

General Provisions 101 through 150.

Section 302—Sand-Bituminous Stabilized Base Course

302.1 General Description

This work includes constructing a base course composed of sand, or a mixture of sands that is stabilized with bituminous materials. Construct the base course according to these Specifications and to the lines, grades, and typical cross-sections shown on the Plans or established by the Engineer.

All of the provisions of Section 300 apply to this Item.

302.1.01 Definitions

General Provisions 101 through 150.

302.1.02 Related References

A. Standard Specifications

Section 105—Control of Work

Section 109—Measurement and Payment

Section 300—General Specifications for Base and Subbase Courses

Section 400—Hot Mix Asphaltic Concrete Construction

Section 412—Bituminous Prime

Section 814—Soil Base Materials

Section 821—Cutback Asphalt

Section 822—Emulsified Asphalt

Section 823—Cutback Asphalt Emulsion

B. Referenced Documents

AASHTO T 191

ASTM D 1138

GDT 7

GDT 8

GDT 59

GDT 67

302.1.03 Submittals

General Provisions 101 through 150.

302.2 Materials

Ensure that materials meet the requirements of the following Specifications:

Material	Specification
Sand for Bituminous Base	Subsection 814.2.03
RC-800	Subsection 821.2.01
Bituminous Prime:	Subsection 821.2.01

Material	Specification
Cutback Asphalt, RC-30, RC-70, RC-250, or MC-30, MC-70, MC-250	
Emulsified Asphalt, EAP-1	Subsection 822.2.01
Cutback Asphalt Emulsion, CBAE-2	Subsection 823.2.01
Blotter Materials (Sand)	Subsection 412.3.05.G.3

Produce a sand-bituminous mixture with a resistance to plastic flow of 200 lbs (90 kg) minimum when tested according to ASTM 1138.

Produce a sand-bituminous mixture with a maximum 4 percent, 7-day absorption when tested according to GDT 8.

302.2.01 Delivery, Storage, and Handling

General Provisions 101 through 150.

302.3 Construction Requirements

A. General

1. Methods

   Use the central plant mixing method when the sand-bituminous stabilized base course is to be paid for by the ton (megagram). Mix, spread, and compact the material according to Section 400, with the following exceptions:

   - No test strip is required.
   - The Compaction Acceptance Schedule does not apply.

   Use either the central plant or traveling plant mixing method when the sand-bituminous stabilized base course is to be paid for by the square yard (meter).

   Use the central plant mixing method when the sand-bituminous stabilized base course is used for widening in addition to the use of suitable special rollers for compaction.

   Use plow and harrow mixing only for aeration according to Subsection 302.3.05.D.1, “Preparing Mixture for Compaction.”

2. Temperature Limitations

   Do not apply bituminous materials when the air temperature is less than 60 ^{o}F (15 ^{o}C) in the shade nor when the temperature of either the subgrade, subbase, or soil to be used in the mixture is below 50 ^{o}F (10 ^{o}C).

302.3.01 Personnel

General Provisions 101 through 150.

302.3.02 Equipment

Provide all necessary equipment (in satisfactory condition) on the Project before work commences. Use applicable equipment specified in Subsection 412.3.02, “Equipment” for bituminous prime.

302.3.03 Preparation

When constructing the base from new materials, prepare the subgrade or subbase as specified in Subsection 300.3.03.C, “Preparing the Subgrade.” or Subsection 300.3.03.D, “Preparing the Subbase”

Prepare the subgrade or subbase by scarifying a minimum of 2 ft (600 mm) on each side of the Plan width and to the depth of material when the Engineer determines that any existing roadbed materials are suitable for mixed-in-place base construction.

Blend new materials with the prepared roadbed thoroughly before adding bituminous material.

302.3.04 Fabrication

General Provisions 101 through 150.

302.3.05 Construction

A. Process

1. In-Place Mixing
   a. The Engineer will determine the suitability of existing roadbed materials for inclusion in the base course.
   b. Remove all roots, sod, or rock more than 3 in (75 mm) in diameter and all other harmful materials from the roadbed during processing.
   c. Place additional new soil (sand) on the roadbed and spread it uniformly to the proper depth to obtain the Plan thickness of the compacted base course. Place materials only on dry, unfrozen subgrade or subbase.
   d. Loosen and pulverize the material to be stabilized without disturbing or damaging the underlying subgrade or subbase. Add water as needed to assist pulverization.
      - 100 percent of material shall pass the 1.5 in (37.5 mm) sieve.
      - A minimum of 80 percent of the soil (exclusive of stones or gravel) shall pass the No. 4 (4.75 mm) sieve.
   e. Provide moisture content between 2 and 8 percent by weight of the soil before adding the bituminous material. The moisture content shall be adjusted under the Engineer's direction.
      1) Add water at the mixer using accurate gauging devices.
      2) Ensure that the moisture is uniformly distributed.
   f. Shape the material to obtain the grade and cross- section required in the Plans. Windrow the material uniformly only if the mixing plant operation requires.
   g. Uniformly apply the bituminous material after adjusting the moisture content and shaping has been completed.
   h. Apply the bituminous material only as temperatures allow per the following table.

	Minimum	Maximum
RC-800 Cutback Asphalt	160 °F (70 °C)	210 °F (100 °C)

   i. Mix the sand-bituminous mixture in successive sections so that the roadway can be compacted full width in one operation. Ensure that a uniform mixture is produced.
2. Central Plant Mixing Method
   a. Thoroughly pulverize material so that 100 percent will pass through a 1.5 in (37.5 mm) sieve and at least 80 percent of the soil, excluding any stone or gravel, will pass through a No. 4 (4.75 mm) sieve.
   b. Adjust the moisture content of the pulverized base material according to Subsection 302.3.05.A.1.d.
   c. Mix as follows:
      1) Proportion the sand-bituminous material and water separately.
      2) Charge all materials into the mixer together and mix immediately.
   d. Mix until a uniform mixture is produced.
   e. Ensure that the temperature of the bituminous material is between 160 °F (70 °C) and 210 °F (100 °C) for mixing.
   f. Spread the sand-bituminous mixture to the proper depth to obtain the thickness required on the Plans of the finished base course.
      - Use an approved spreader.
      - Place sand-bituminous material only on a dry subgrade or subbase.

B. Quantity of Bituminous Material

The Engineer will determine the quantity of bituminous material required. Apply the bituminous material uniformly, using an amount within 5 percent of the required quantity.

If bituminous material is applied at a rate more than 5 percent in excess of the required amount and it is considered detrimental, remove and reconstruct the section. If the application rate is more than 5 percent and the material is left in place, no payment will be made for bituminous material in excess of the 5 percent tolerance.

Correct any shortage of bituminous material more than 5 percent less than the required amount by applying additional bituminous material. The cost of reapplying, remixing, and compacting will be included in this Pay Item at no additional cost to the Department.

C. Extent of Application

Limit the application of the bituminous material so that aeration and compaction can begin immediately after mixing.

D. Mixing

1. Preparing Mixture for Compaction
   a. Shape the base to line, grade, and cross-section indicated in the Plans.
   b. Aerate the mixture as follows:
      1) Begin aeration as soon as the prepared base is long enough to permit the operation of aeration equipment.
      2) Loosen and turn the mixture with harrows, blades, or the equivalent, until the volatile solvents and water evaporate and the mixture is tacky.
   c. If rain threatens the work, roll the surface enough to exclude as much rainwater as possible. Resume aeration as soon as weather permits.
2. Thickness of Courses
   a. Spread the base as follows:
      1) Spread to a maximum compacted lift thickness of 8 in (200 mm).
      2) Lay the maximum lift thickness for which the specified compaction is obtained, otherwise lay the base in more than one course.

E. Compacting and Finishing

Compact as soon as the condition of the material and the weather permit. Bring the base to line, grade, and cross- section. Roll until the full depth of the course is compacted to 95 percent of the maximum dry density of the sand, without bituminous material.

1. Single-Course Construction

   After the base has been compacted, do the following:
   a. Shape the course to line, grade, and cross-section again.
   b. Roll the surface with a pneumatic-tired roller followed by a steel-wheel roller to seal the surface. Begin at the edges and work toward the center until the surface is smooth, closely knit, free from cracks, and in conformance with the proper line, grade, and cross section.
   c. Correct any defects specified in Subsection 300.3.06.B, “Repairing Defects.”
2. Multiple-Course Construction

   After compacting the first course, do the following:
   a. Shape the surface again to line, grade, and cross- section.
   b. Spread and compact the second and succeeding courses as previously described.
   c. Finish the surface according to the procedure specified for Single-Course Construction, above.
3. Compact Irregular Areas

Compact irregular areas inaccessible to a roller by using mechanical tampers approved by the Engineer. Density requirements are unchanged from above.

F. Prime Coat

Apply bituminous prime according to Section 412.

G. Preservation of Base

Maintain the base in a smooth and acceptable condition until it is covered by other construction.

1. Make repairs to any defects as specified in Subsection 300.3.06.B, "Repairing Defects."
2. Preserving the base as specified does not relieve the Contractor of the general duty to maintain The Work until it is accepted as specified in Section 105.

302.3.06 Quality Acceptance

A. Compaction Tests

Test compaction as follows:

1. Determine the maximum dry density from representative samples of the material before adding the bituminous material by GDT 7 or GDT 67.
2. Determine the in-place density of the base according to AASHTO T 191 or GDT 59

B. Finished Surface Tests

Check the finished surface of the base, subbase, or shoulder course as follows:

1. Check the longitudinal surface using a 15 ft (4.5 m) straightedge parallel to the centerline.
2. Check the transverse surface by using one of the following tools:
   a. A template, cut true to the required cross- section and set with a spirit level on non-superelevated sections
   b. A system of ordinates, measured from a stringline
   c. A surveyor's level
3. Ensure that ordinates measured from the bottom of the template, stringline, or straightedge, to the surface do not exceed 1/4 in (6 mm) at any point. Rod readings shall not deviate more than 0.02 ft (6 mm) from required readings.
4. Correct any variations from these requirements immediately according to Subsection 300.3.06.B, "Repairing Defects."

C. Thickness Tolerances

1. Thickness Measurements

   Determine the thickness of the base, subbase, or shoulder course, by making as many checks as necessary to determine the average thickness.
2. Deficient Thickness
   a. If any measurement is deficient in thickness more than 1/2 in (13 mm), make additional measurements to determine the deficient area.
   b. Correct any area deficient between 1/2 in (13 mm) and 1 in (25 mm) to the design thickness by using one of the following methods according to these Specifications:
      - Apply Asphaltic Concrete 9.5 mm Superpave.
      - Leave in place and accept payment for the materials and area (if the course is mixed in place) at ½ the Contract Unit Price for the deficient area.
   c. Correct any area deficient in thickness by more than 1 inch (25 mm) by applying Asphaltic Concrete 9.5 mm Superpave or removing the material to the full depth of the course and reconstructing to the required thickness in accordance with these Specifications.

d. If payment is made by the cubic yard (meter) or ton (megagram), payment for Asphaltic Concrete 9.5 mm Superpave to correct deficiencies will be made at the Contract Unit Price that applies to the course needing correction. Payment for additional material used in reconstructing an area will be made at the Contract Unit Price, but the removed material removed will be deducted from payment.

e. If payment is made by the square yard (meter), no payment will be made for additional material required to correct deficiencies or reconstructing deficient work.

3. Average Thickness

Average thickness is measured as follows:

a. The average thickness per linear mile (kilometer) is determined from all measurements within the mile (kilometer) increments except the areas deficient by more than 1/2 in (13 mm) and not corrected.

b. The average thickness shall not exceed the specified thickness by more than 1/2 in (13 mm).

c. If the basis of payment is per cubic yard (meter) or ton (megagram) and the average thickness for any mile (kilometer) increment exceeds the allowable 1/2 in (13 mm) tolerance, the excess quantity in that increment will be deducted from the Contractor's payments.

d. The excess quantity is calculated by multiplying the average thickness that exceeds the allowable 1/2 in (13 mm) tolerance by the surface area of the base, subbase, or shoulder, as applicable.

e. If the basis of payment is per square yard (meter), no deduction will be made for excess thickness.

302.3.07 Contractor and Warranty and Maintenance

General Provisions 101 through 150.

302.4 Measurement

A. Sand Bituminous Stabilized Base Course Materials

When a mixed-in-place construction method is used, any additional materials necessary to add to the roadbed will be measured by loose volume in cubic yards (meters) of additional material added according to Section 109.

B. Sand Bituminous Stabilized Base Course

When payment is by the square yard (meter), measure length along the centerline in feet (meters) and use the Plan width to calculate area. Use actual dimensions of irregular areas placed to calculate the number of square yards.

When payment is by the ton (megagram), measure the actual weight of the sand-bituminous mixture on approved scales.

C. Bituminous Materials

Measure bituminous materials incorporated into the mixture according to Section 109.

No separate measurement will be made for bituminous prime.

D. Unsuitable Material

Measure unsuitable material removed according to the Earthwork Item in the Contract.

302.4.01 Limits

General Provisions 101 through 150.

302.5 Payment

A. Base Course Material

Sand Bituminous Stabilized Base Course materials, in place and accepted, will be paid at the Contract Unit Price per cubic yard (meter), which shall be full compensation for furnishing the material where specified in the Pay Item, mixing the pit, for all loading, unloading, spreading as here specified, and for hauling where specified in the Pay Item.

B. Sand-Bituminous Stabilized Base Course

Sand-Bituminous Stabilized Base Course, complete in place and accepted, will be paid for at the Contract Unit Price per square yard (meter), which shall be full compensation for preparation of the roadbed, for mixing on the road, shaping, pulverizing, hauling, watering, compaction, repair of all defects, and maintenance

C. Sand-Bituminous Stabilized Base Course Pre-Mixed

Sand-Bituminous Stabilized Base Course, complete in place and accepted, will be paid for at the Contract Unit Price per ton (megagram) or per square yard (meter), which shall be full compensation for preparation of the roadbed, for all materials except bituminous materials, and for loading, unloading, all hauling, mixing, spreading, watering, rolling, shaping, and maintenance.

D. Bituminous Material

The number of gallons (liters) of bituminous material, except bituminous material in excess of the 5% tolerance and except that used as Bituminous Prime, will be paid at the Contract Unit Price per gallon (liter), complete and in place.

Payment is full compensation for providing bituminous material, hauling, heating, and applying the material.

E. Unsuitable Material

Removal of unsuitable material will be paid for according to the Earthwork Item in the Contract.

Payment will be made under:

Item No. 302	Sand-bituminous stabilized base course material, including material and haul	per cubic yard (meter)
Item No. 302	Sand-bituminous stabilized base course material, including haul	per cubic yard (meter)
Item No. 302	Sand-bituminous stabilized base course, ___ inch (mm)	per square yard (meter)
Item No. 302	Pre-mixed sand-bituminous stabilized base course, including material	per ton (megagram) or per square yard (meter)
Item No. 302	Bituminous materials	per gallon (liter)

302.5.01 Adjustments

General Provisions 101 through 150.

Section 303—Topsoil, Sand-Clay, or Chert Construction

303.1 General Description

This work includes constructing a base, subbase, or shoulder course using topsoil, sand-clay, or chert, stabilized with aggregate, where required.

Construct according to these Specifications and to the lines, grades, and typical cross-sections shown on the Plans or established by the Engineer.

All of the provisions of Section 300 apply to this Item.

303.1.01 Definitions

General Provisions 101 through 150.

303.1.02 Related References

A. Standard Specifications

Section 106—Control of Materials Section 202—Random Clearing and Grubbing

Section 205—Roadway Excavation

Section 206—Borrow Excavation

Section 300—General Specifications for Base and Subbase Courses

Section 412— Bituminous Prime

Section 803—Stabilizer Aggregate

Section 814—Soil Base Materials

Section 821—Cutback Asphalt

Section 823 – Cutback Asphalt Emulsion

B. Referenced Documents

AASHTO T 99 and 191

GDT 21

GDT 59

GDT 67

303.1.03 Submittals

General Provisions 101 through 150.

303.2 Materials

Ensure that materials meet the requirements of the following Specifications:

Material	Section
Topsoil or Sand-Clay	814.2.01
Stabilizer Aggregates (Type as Specified)	803
Chert	814.2.04
Cutback Asphalt, RC-30, RC-70, RC-250 or MC-30, MC-70, MC-250	821.2.01
Cutback Asphalt Emulsion, CBAE-2	823.2.01
Blotter Material (Sand)	412.3.05.G.3

If an ingredient needs to be added to those naturally present in the roadbed or in any approved source of base, subbase, or shoulder material, obtain it from sources approved by the Engineer. Select sources according to the guidelines of Section 106.

303.2.01 Delivery, Storage, and Handling

General Provisions 101 through 150.

303.3 Construction Requirements

303.3.01 Personnel

General Provisions 101 through 150.

303.3.02 Equipment

Provide equipment in satisfactory condition for proper construction. Use any applicable equipment specified in Subsection 412.3.02, “Equipment” for bituminous prime.

303.3.03 Preparation

If creating the base, subbase, or shoulder construction entirely with new materials, prepare the subgrade or subbase as specified in Subsection 300.3.03.C, “Preparing the Subgrade” or Subsection 300.3.03.D, “Preparing the Subbase”. Do not place base materials on muddy or frozen subgrade or subbase.

303.3.04 Fabrication

General Provisions 101 through 150.

303.3.05 Construction

A. Roadbed Materials

If the Engineer determines roadbed materials are unsuitable for use, remove and replace them with approved new materials.

If the Engineer determines that roadbed materials are satisfactory, mix, shape, and finish them according to the Specifications.

B. Placing Material

Mix and control the materials according to Subsection 300.3.05.B, “Mining and Mixing in a Pit.” Handle and place materials carefully to prevent fine and coarse materials from separating.

If placing only one kind of material on the prepared subgrade or subbase, or adding only one kind of material to the roadbed to obtain the required mixture, place the material directly on the prepared roadbed and distribute uniformly.

If mixing together materials from more than one outside source, spread them in separate layers to the proper depth. Do this for each separate course, if placing the base in more than one course.

If creating topsoil or sand-clay from artificial mixtures, place the proper proportions of the required ingredients on the roadbed and distribute uniformly.

Use the following steps to spread, mix, and stabilize a base, subbase, or shoulder course.

1. Spreading

   Spread material lengthwise up to 2,500 ft (750 m) on the roadbed. If the material is too wet to mix, place additional material as the Engineer requires. Mix as soon as the moisture content reaches the proper level.

2. Mixing

   Mix the material by one of the following methods, weather and moisture conditions permitting:

   a. Plowing, Harrowing, and Blading

      Without disturbing the underlying subgrade or subbase, plow the material to its full depth, then harrow with a disc harrow. Begin plowing both at the edges and the center, alternating back and forth as many times as necessary, to produce a thoroughly pulverized and homogeneous mixture.

   b. Traveling Plant

      A traveling plant mixer may be used instead of the method described above.

3. Stabilizing

   After mixing and shaping the base, subbase, or shoulder course, spread stabilizer aggregate, if specified in the Contract or the Plans.

   The quantity of stabilizer material required will be specified in pounds/square yard (kilograms/square meter) of road surface covered. The Department reserves the right to increase, decrease, or eliminate stabilizer material.

Spread and mix stabilizer aggregate with either the upper 4 in (100 mm) or to the full depth of the course, as the Plans indicate. Uniformly incorporate the stabilizer aggregate into the course. Remix and reshape all sections of the course as needed.

When using stabilized subgrade as a base course, either permanently or temporarily (for example, as detours), prime according to Section 412.

C. Compacting and Finishing

Use the following steps to compact and finish a base, subbase, or shoulder course.

1. Moisture Content

   Ensure that the moisture content is uniformly distributed and within 90 to 120 percent of optimum. The Engineer will determine the percentage within this range that is appropriate for each job.

2. Compaction

   If the base, subbase, or shoulder course is more than 8 in (200 mm) thick, compact it in two courses of equal thickness.

   After placing and mixing the material, roll it until the course is uniformly compacted to 100 percent of the maximum dry density.

   Complete all courses of any section of construction started in the same day, weather permitting.

   a. Single-Course Construction
      1) Compact the surface by rolling, beginning at least 2 ft (600 mm) outside of its edges.
      2) Proceed toward the center until the finished surface is smooth, closely knit, and conforms to the proper line, grade, and cross-section.
      3) Correct any defects according to Subsection 300.3.06.B, “Repairing Defects.”

   b. Multiple-Course Construction
      1) After compacting the first course, shape the surface again to line, grade, and cross- section.
      2) Add water as necessary to develop the proper moisture content.
      3) Spread and compact the second and any succeeding courses (including stabilizer aggregate, if required) without rolling the first course again.
      4) Finish the surface according to the procedure specified for Subsection 303.3.05.C.2.a, “Single-Course Construction.”

   c. Irregular Areas

      In places inaccessible to the roller, obtain the required compaction with mechanical tampers approved by the Engineer. Apply the same density requirements as stated above.

D. Protecting the Base, Subbase, or Shoulders

Maintain the course true to grade and cross- section. Until the course cures to the Engineer’s satisfaction, keep it free from ruts, ridges, and dust caused by traffic. Roll and add water as needed and repair defects as soon as they appear, as specified in Subsection 300.3.06.B, “Repairing Defects.”

E. Priming the Base

After completing the base, apply Bituminous Prime according to Section 412.

If the base is primed before base material classification test results are known, repair and reprime any resulting defective areas at no additional cost to the Department.

303.3.06 Quality Acceptance

A. Compaction Tests

a. The maximum dry density will be determined from representative samples of compacted material, according to GDT 67 or AASHTO T 99, Method D, where applicable.

b. The Engineer will determine the in-place density of finished courses according to AASHTOT 191, GDT59, or GDT 21 , where applicable.

B. Finished Surface

a. Check the finished surface of the base, subbase, or shoulder course transversely. Check the surface by placing a 15 ft (4.5 m) straightedge perpendicular to the centerline, and also by using one of the following tools:

- A template, cut true to the required cross section and set with a spirit level on non-superelevated sections
- A system of ordinates, measured from a stringline
- A surveyor's level

b. Ensure that ordinates measured from the bottom of the template, stringline, or straightedge to the surface do not exceed 1/2 in (13 mm) at any point. Rod readings shall not deviate more than 0.04 foot (13 mm) from the required readings.

c. Correct any variations that exceed the requirements immediately, as specified in Subsection 300.3.06.B, "Repairing Defects."

C. Thickness Tolerances

1. Thickness Measurements

   a. Thickness requirements apply to shoulder construction where the Plans specify a uniform thickness, or where the shoulders will be surfaced.

   b. Determine the thickness of the base, subbase, or shoulder course, by making as many checks as necessary to determine the average thickness.

2. Deficient Thickness

   a. If any measurement is deficient in thickness more than 1/2 in (13 mm), make additional measurements to determine the deficient area.

   b. Correct any area deficient between 1/2 in (13 mm) and 1 in (25 mm) to the design thickness by using one of the following methods according to these Specifications:

      - Add additional quantities of the same materials and reconstruct to the required thickness
      - Leave in place and accept payment for the materials and area (if the course is mixed in place) at ½ the Contract Unit Price for the deficient area.

   c. Correct any area deficient in thickness by more than 1 inch (25 mm) by adding additional quantities of the same material and reconstructing to the required thickness in accordance with these Specifications.

   f. If payment is made by the cubic yard (meter), payment for additional material to correct deficiencies will be made at the Contract Unit Price with no additional cost to the Department for scarification, mixing or compaction.

   e. If payment is made by the square yard (meter), no payment will be made for additional material required to correct deficiencies or reconstructing deficient work.

3. Average Thickness

   a. The average thickness per linear mile (kilometer) is determined from all measurements within the mile (kilometer) increments except the areas deficient by more than 1/2 in (13 mm) and not corrected.

   b. The average thickness shall not exceed the specified thickness by more than 1/2 in (13 mm).

   c. If the basis of payment is per cubic yard (meter) for base, subbase, or shoulder, and the average thickness for any mile (kilometer) increment exceeds the allowable 1/2 in (13 mm) tolerance, the excess quantity in that increment will be deducted from the Contractor's payments.

   d. The excess quantity is calculated by multiplying the average thickness that exceeds the allowable 1/2 in (13 mm) tolerance by the surface area of the base, subbase, or shoulder, as applicable.

   e. If the basis of payment is per square yard (meter), no deduction will be made for excess thickness.

303.3.07 Contractor Warranty and Maintenance

General Provisions 101 through 150.

303.4 Measurement

A. Topsoil, Sand-Clay, or Chert

Topsoil, sand-clay, or chert is measured by the cubic yard (meter) loose volume, or by the square yard (meter), as specified in Section 109.

B. Stabilizer Aggregate

Stabilizer aggregate is measured by the ton (megagram). Its weight is determined by certified truck scales on the job, or by another certified scale approved in advance by the Engineer.

C. Prime

Bituminous prime is not measured for separate payment.

D. Clearing and Grubbing

When clearing and grubbing is eligible for payment under the provisions of Subsection 106.10, “Local Materials Sources,” it is measured by the acre (hectare).

E. Stripping Excavation

When stripping excavation is eligible for payment under the provisions of Section 206 it will be measured using the average end area method as borrow excavation, including material, by the cubic yard (meter).

F. Removing Unsuitable Materials

Unsuitable materials removed are measured and paid for under the Earthwork Item in the Contract.

G. Blending and Remixing

Blending and remixing will be measured by the square yard (meter) as measured on the longitudinal surface, and to the width specified.

303.4.01 Limits

General Provisions 101 through 150.

303.5 Payment

A. Topsoil, Sand-Clay or Chert Base, Subbase, and Shoulder Course

This course will be paid at the Contract Unit Price per cubic yard (meter) or per square yard (meter) as specified for base, subbase, and shoulders, complete, in place, and accepted.

Payment is full compensation for:

- Preparing the roadbed
- Furnishing materials when specified in the Pay Item
- Loading and unloading
- Scarifying, spreading, plowing and harrowing
- Mixing and blending in the pit, in the plant, and in the roadway
- Rolling and shaping

- Watering, maintaining, hauling, and priming

B. Stabilizer Aggregate

Stabilizer aggregate will be paid at the Contract Unit Price per ton (megagram) complete, in place, and accepted. Payment will be full compensation for furnishing materials, loading, hauling, unloading, handling, spreading, scarifying, mixing, watering, shaping, and maintenance.

C. Clearing and Grubbing

Clearing and grubbing eligible for payment under the provisions of Subsection 106.10, "Local Material Sources," will be paid according to Section 202.

D. Stripping Excavation

Stripping excavation eligible for payment under the provisions of Section 206 will be paid according to the same section. Payment will be full compensation for the removal of all materials unsuitable for use in the base, subbase, or shoulder.

E. Priming

Bituminous prime will not be measured for separate payment. Its cost is included in the price bid for base.

Payment will be made under:

Item No. 303	Topsoil, sand-clay, or chert (base, subbase, shoulder) course, class ___ including material	Per cubic yard (meter) or square yard (meter)
Item No. 303	Topsoil, sand-clay, or chert (base, subbase, shoulder) course, class___	Per cubic yard (meter) or square yard (meter)
Item No. 303	Topsoil, sand-clay, or chert (base and shoulder) course, class ___ including material	Per cubic yard (meter) or square yard (meter)
Item No. 303	Topsoil, sand-clay, or chert (base and shoulder) course, class ___	Per cubic yard (meter) or square yard (meter)
Item No. 303	Stabilizer aggregate, type___ including material	Per ton (megagram)

303.5.01 Adjustments

General Provisions 101 through 150.

Section 304—Soil Aggregate Construction

304.1 General Description

This work includes constructing base, subbase, or shoulder courses composed of mineral aggregate and soil mortar on prepared subgrade or subbase. Construct according to these Specifications and to the lines, grades, thickness, and cross-sections shown on the Plans or established by the Engineer.

All of the provisions of Section 300 apply to this work.

304.1.01 Definitions

General Provisions 101 through 150.

304.1.02 Related References

A. Standard Specifications

Section 105—Control of Work

Section 109—Measurement and Payment

Section 300—General Specifications for Base and Subbase Courses

Section 412—Bituminous Prime

Section 816—Soil Aggregate Bases

B. Referenced Documents

GDT 21

GDT 49

GDT 59

304.1.03 Submittals

General Provisions 101 through 150.

304.2 Materials

Ensure that materials meet the requirements of the following Specifications:

Material	Section
Soil Aggregate Base	816.2.01
Soil Mortar for Soil Aggregate Base	816.2.02
Bituminous Prime	412

304.2.01 Delivery, Storage, and Handling

General Provisions 101 through 150.

304.3 Construction Requirements

304.3.01 Personnel

General Provisions 101 through 150.

304.3.02 Equipment

Provide equipment in satisfactory condition for proper construction. Use any applicable equipment as specified in Subsection 412.3.02, “Equipment” for Bituminous Prime.

304.3.03 Preparation

Prepare the subgrade or subbase as specified in Subsection 300.3.03.C, “Preparing the Subgrade” or Subsection 300.3.03.D, “Preparing the Subbase.” Place soil aggregate materials only on a dry, thawed foundation.

304.3.04 Fabrication

General Provisions 101 through 150.

304.3.05 Construction

A. Methods

1. Use any of the methods of mixing material described in Section 300.
2. In lieu of the methods of mixing described in Section 300 and when approved by the Engineer, use one of the following methods:
   a. Produce soil aggregate from an approved source or deposit.
      1) Produce soil aggregate base that will meet the requirements of this Specification after it has been mined, crushed, and processed.
      2) Stockpile the processed material before delivery to the Project.
      3) Keep the stockpile large enough during loading operations to ensure that a uniformly blended material is delivered to the Project.
      4) Use equipment that will not segregate the material during loading.
   b. Produce a soil aggregate using in-place operations
      1) Mix one material with the existing roadbed materials.
      2) Mix two materials on a prepared subgrade.

B. Placing Material

Use the following steps to spread and mix base, subbase, or shoulder course.

1. Spreading and Mixing
   a. When using soil aggregate base produced from an approved source, uniformly spread the material with an approved mechanical spreader to obtain the desired thickness. Compact and finish according to Subsection 304.3.05.C, “Compacting and Finishing.”
   b. When in-place operations are required, use the following procedures for either mixing one material with the existing roadbed materials or mixing two materials on a prepared subgrade:
      1) Uniformly spread the material with an approved mechanical spreader to obtain the desired thickness when mixing two materials on a prepared subgrade. When mixing only one material with the existing roadbed materials, the material may be dumped directly on the subgrade and spread uniformly.
      2) After spreading material, and as soon as weather and moisture conditions permit, mix it by plowing, harrowing, and blading.
      3) Without disturbing the underlying subgrade or subbase, plow the material to its full depth, then harrow with a disc harrow.
      4) Begin plowing alternately at the edges and the center, back and forth, as many times as necessary to produce a thoroughly pulverized and homogeneous mixture.
      5) Compact and finish according to Subsection 304.3.05.C, “Compacting and Finishing.”

C. Compacting and Finishing

Construct courses to the maximum thickness as specified in Subsection 300.3.05.C.5, “Compaction.”

Use the following steps to compact and finish a base, subbase, or shoulder course:

1. Moisture Content

   Ensure that the moisture content of materials is uniformly distributed and allows compaction to the specified density. Add sufficient water during the mixing operations to provide the optimum moisture content, ± 2 percentage points.

2. Compaction

   After placing and shaping the material to line and grade, compact it to 98 percent of the maximum dry density as determined by representative samples, using GDT 49. When using the material as a base for paved shoulders 6 ft (1.8 m) wide or less, compact to at least 96 percent of the maximum dry density.

   a. One-Course Construction
      1) After compaction, shape to the required grade, line, and cross-section.
      2) Add water as necessary to develop the proper moisture content.
      3) Roll until the surface is smooth, closely knit, and free of cracks.
      4) Correct all defects according to Subsection 300.3.06.B, "Repairing Defects."

   b. Multiple Course Construction
      1) After compacting the first course, shape the surface again to line, grade, and cross-section.
      2) Add water as necessary to develop the proper moisture content.
      3) Spread and compact the second and any succeeding courses without rolling the first course again.
      4) Finish the surface according to the procedure specified for one-course construction.

   c. Irregular Areas

      In places inaccessible to the roller, obtain the required compaction with mechanical tampers approved by the Engineer.

D. Priming Base

After completing the base, apply bituminous prime according to Section 412.

304.3.06 Quality Acceptance

A. Compaction

Determine the maximum dry density from representative samples of compaction material according to GDT 49. Determine the in-place density according to GDT 21 or GDT 59.

B. Finished Surface

1. Transverse Check

   Check the finished surface of the base, subbase, or shoulder course transversely. Using one of the following tools:

   - A template, cut true to the required cross- section and set with a spirit level on non-superelevated sections
   - A system of ordinates, measured from a stringline
   - A surveyor's level

2. Longitudinal Check

   Check the surface longitudinally by placing a 15 ft (4.5 m) straightedge parallel to the centerline.

Ensure that ordinates measured from the bottom of the template, stringline, or straightedge to the surface do not exceed 1/4 in (6 mm) at any point. Rod readings shall not deviate more than 0.02 foot (6 mm) from the required readings.

Immediately correct any variations that exceed the requirements, as specified in Subsection 300.3.06.B, "Repairing Defects."

C. Thickness Tolerances

1. Thickness Measurements

a. Thickness requirements apply to shoulder construction where the Plans specify a uniform thickness, or where the shoulders will be surfaced.

b. Determine the thickness of the base, subbase, or shoulder course, by making as many checks as necessary to determine the average thickness.

2. Deficient Thickness

a. If any measurement is deficient in thickness more than 1/2 in (13 mm), make additional measurements to determine the deficient area.

b. Correct any area deficient between 1/2 in (13 mm) and 1 in (25 mm) to the design thickness by using one of the following methods according to Subsection 300.3.06.B.

- Add additional quantities of the same materials and reconstruct to the required thickness
- Leave in place and accept payment for the materials and area at ½ the Contract Unit Price for the deficient area.

c. Correct any area deficient in thickness by more than 1 inch (25 mm) by adding additional quantities of the same material and reconstructing to the required thickness in accordance with Subsection 300.3.06.B.

d. No additional payment will be made for correcting deficient thickness.

3. Average Thickness

a. The average thickness per linear mile (kilometer) is determined from all measurements within the mile (kilometer) increments.

b. Do not include in the measurements, any areas that are deficient by more than 1/2 in (13 mm) but less than 1 in (25 mm) and left in place.

D. Priming Base

Prime the completed base according to Section 412.

304.3.07 Contractor Warranty and Maintenance

A. Protecting the Base, Subbase, or Shoulders

Maintain the course until the Engineer determines that it has cured sufficiently and is ready to prime. Maintain by additional wetting, rolling, and blading as necessary. Repair any defects according to Subsection 300.3.06.B, “Repairing Defects.”

These protection measures do not relieve the Contractor of maintaining the Work until final acceptance as specified in Section 105.

304.4 Measurement

A. Soil Aggregate Base Course

Soil aggregate base course is measured in square yards (meters) of the specified thickness, as defined in Section 109. The length is measured on the surface along the centerline, and the width as specified on the Plans. Irregular areas, such as turnouts and intersections, are measured to the closest square yard (meter).

Where specified on the Plan, measurements are by the ton (megagram) according to Section 109

B. Soil Mortar

When obtained from a borrow pit, soil mortar for soil aggregate base is measured by the cubic yard (meter) loose volume.

C. Bituminous Prime

Bituminous prime is not measured for separate payment.

304.4.01 Limits

General Provisions 101 through 150.

304.5 Payment

A. Soil Aggregate Base Course

Soil aggregate base course will be paid at the Contract Unit Price per square yard (meter) of the specified thickness, or per ton (megagram), complete and accepted as defined above including Bituminous Prime.

B. Soil Mortar

When obtained from a borrow pit, soil mortar for soil aggregate base will be paid at the Contract Unit Price per cubic yard (meter), including materials and haul.

C. Bituminous Prime

Bituminous prime will not be paid separately; include its cost in the base course bid price.

Payment will be made under:

Item No. 304	Soil aggregate base course, including materials _____ in (mm)	Per square yard (meter)
Item No. 304	Soil aggregate base course, including materials	Per ton (megagram)
Item No. 304	Soil mortar, including materials	Per cubic yard (meter)

304.5.01 Adjustments

General Provisions 101 through 150.

Section 305—Cement Stabilized Soil Aggregate Construction

305.1 General Description

Specifications for this work will be included elsewhere in the Contract.

Section 306—Reclaimed Liquid Stabilized Base

306.1 General Description

Specifications for this work will be included elsewhere in the contract.

Section 307—Impermeable Membrane for Subgrades, Basins, Ditches, and Canals

307.1 General Description

This work includes installing materials to serve as an impermeable membrane. The membrane prevents water seepage beneath the installation level shown on the Plans.

307.1.01 Definitions

General Provisions 101 through 150.

307.1.02 Related References

A. Standard Specifications

Section 888—Waterproofing Membrane Material

B. Referenced Documents

General Provisions 101 through 150.

307.1.03 Submittals

General Provisions 101 through 150.

307.2 Materials

Use the following materials to construct the waterproofing layer (impermeable membrane):

- Cross-laminated, high-density polyethylene film
- Flexible, self-adhesive, rubberized asphalt

Ensure that these materials meet the requirements of Subsection 888.2.03. As an alternative and if approved by the Engineer, use another equal system that has at least a 5-year serviceability record.

307.2.01 Delivery, Storage, and Handling

General Provisions 101 through 150.

307.3 Construction Requirements

307.3.01 Personnel

General Provisions 101 through 150.

307.3.02 Equipment

General Provisions 101 through 150.

307.3.03 Preparation

General Provisions 101 through 150.

307.3.04 Fabrication

General Provisions 101 through 150.

307.3.05 Construction

A. Installation

Install according to the Plans.

B. Placement

Place the membrane on a soil blanket or cushion at least 6 in (150 mm) thick, that contains material fine enough to pass through a No. 10 (2 mm) sieve. Take care not to form a “slip plane” between the underlying soil and overlying material. Ensure that the membrane is at least 4 ft (1.2 m) wide, with seam strengths at least 95 percent of the membrane strength.

C. Protection

During construction, protect the membrane from damage at all times. Remove and replace sections damaged by sunlight, heat, sharp objects, or any other source, at no cost to the Department.

307.3.06 Quality Acceptance

General Provisions 101 through 150.

307.3.07 Contractor Warranty and Maintenance

General Provisions 101 through 150.

307.4 Measurement

Impermeable membrane for subgrades, basins, ditches, and canals is measured by the number of square yards (meters) of subgrade, basins, ditches, and canals.

307.4.01 Limits

Extra, overlapping material required to produce a uniform membrane is not measured.

307.5 Payment

Impermeable membrane for subgrades, basins, ditches, and canals will be paid for at the Contract Unit Price per square yard (meter). This payment will be full compensation for preparing the surfaces, furnishing the membrane system materials, and applying the membrane system.

Payment will be made under:

Item No. 307	Impermeable membrane for subgrades, basins, ditches, and canals	Per square yard (meter)

307.5.01 Adjustments

General Provisions 101 through 150.

Section 310—Graded Aggregate Construction

310.1 General Description

This work includes constructing a base, subbase or shoulder course composed of mineral aggregates. Construct according to these Specifications and to the lines, grades, thickness, and typical cross-sections shown on the Plans or established by the Engineer.

The provisions of Section 300 apply to this work.

310.1.01 Definitions

General Provisions 101 through 150.

310.1.02 Related References

A. Standard Specifications

Section 105—Control of Work

Section 300—General Specifications for Base and Subbase Courses

Section 412—Bituminous Prime

Section 815—Graded Aggregate

Section 821—Cutback Asphalt

Section 823—Cutback Asphalt Emulsion

B. Referenced Documents

AASHTO T 180

GDT 21

GDT 59

310.1.03 Submittals

General Provisions 101 through 150.

310.2 Materials

Ensure that materials meet the requirements of the following Specifications:

Material	Section
Graded aggregate	815
Cutback asphalt, RC-30, RC-70, RC-250 or MC-30, MC-70, MC-250	821.2.01
Cutback Asphalt Emulsion, CBAE-2	823.2.01
Blotter material (sand)	412.3.05.G.3

310.2.01 Delivery, Storage, and Handling

General Provisions 101 through 150.

310.3 Construction Requirements

310.3.01 Personnel

General Provisions 101 through 150.

310.3.02 Equipment

Provide equipment in satisfactory condition for proper construction of the base, subbase or shoulder course. Use any applicable equipment specified in Subsection 412.3.02, “Equipment” for Bituminous Prime.

310.3.03 Preparation

Prepare the subgrade or subbase as specified in Subsection 300.3.03.C, “Preparing the Subgrade” or Subsection 300.3.03.D, “Preparing the Subbase.” Place graded aggregate materials only on dry, thawed subgrade or subbase.

310.3.04 Fabrication

General Provisions 101 through 150.

310.3.05 Construction

A. Placing Material

Use the central plant mix method unless producing aggregates (from an approved source or deposit) that conform to the requirements of Section 815.

Use the following steps to mix base and spread subbase or shoulder course.

1. Mixing

   When blending two sizes of aggregate, proportion the aggregate and water, if needed, into the central plant. Mix until producing a homogeneous and uniform mixture.

2. Spreading

   To obtain the specified thickness, uniformly spread materials to the proper depth with a mixture spreader. Do not use materials containing frost or frozen particles.

   a. One-Course Construction

      Lay one course to a maximum thickness of 8 in (200 mm) compacted.

   b. Multiple-Course Construction

      If the thickness of the base, subbase or shoulder course exceeds 8 in (200 mm), construct it in 2 or more courses of equal thickness.

B. Compacting Material

Use the following steps to compact and finish a base, subbase, or shoulder course.

1. Moisture Content

   Ensure that the moisture content of materials is uniformly distributed and allows compaction to the specified density.

   Unless approved by the Office of Materials, no graded aggregate will be shipped to a project when the moisture content of the material exceeds two percent of optimum moisture.

2. Compaction

   After shaping the spread material to line, grade, and cross-section, roll to uniformly compact the course. If using Group 1 aggregate, roll to at least 98 percent of maximum dry density. If using Group 2 aggregate, roll to at least 100 percent of the maximum dry density.

   If using graded aggregate mixtures composed of either group as base for paved shoulders 6 ft (1.8 m) wide or less, compact to at least 96 percent of the maximum dry density.

   Regardless of compaction, ensure that the compacted base is sufficiently stable to support construction equipment without pumping. If the base material is unstable from too much moisture, dry and rework the base material. Dry and rework the underlying subgrade, if necessary.

   a. One-Course Construction
      1) After compaction, shape to the required grade, line, and cross- section.
      2) Add water as necessary to develop the proper moisture content.
      3) Roll until the surface is smooth, closely knit, and free of cracks.
      4) Correct all defects according to Subsection 300.3.06.B, “Repairing Defects.”

   b. Multiple-Course Construction
      1) After compacting the first course, shape the surface again to line, grade, and cross section.
      2) Add water as necessary to develop the proper moisture content.
      3) Spread and compact the second and any succeeding courses without rolling the first course again.
      4) Finish the surface according to the procedure specified for one-course construction.

   c. Irregular Areas

      In places inaccessible to the roller, obtain the required compaction with mechanical tampers approved by the Engineer. Apply the same density requirements as stated above in Subsection 310.3.05.B.

C. Finishing

Finish the surface of the subbase for Portland cement concrete pavement or the base of asphaltic concrete pavement with automatically controlled screed equipment when required by Subsection 300.3.02.H, “Fine Grading Machine” of the Specifications. Furnish, install, and maintain the sensing wires needed to control the finish operation as a part of the Pay Item. When automatically controlled screed equipment is not required, fine grading with motor graders is permitted.

Finish immediately after the placing and compacting operations. After finishing, compact the subbase again, according to Subsection 310.3.05.B, “Compacting Material.”

D. Protecting the Base, Subbase or Shoulders

Maintain the course until the Engineer determines that it has cured sufficiently and is ready to prime. Maintain by additional wetting, rolling, and blading as necessary. Repair any defects according to Subsection 300.3.06.B, "Repairing Defects."

These protection measures do not relieve the Contractor of maintaining the Work until final acceptance as specified in Section 105.

E. Priming the Base

Apply bituminous prime according to Section 412 unless using:

- Graded aggregate base under Portland cement concrete pavement
- Graded aggregate base under asphaltic concrete 5 in (125 mm) or more in total thickness

310.3.06 Quality Acceptance

A. Compaction Tests

1. Determine the maximum dry density from representative samples of compacted material, according to AASHTO T180, Method D.
2. Determine the in-place density of finished courses according to GDT 21 or GDT 59 , where applicable.

B. Finished Surface

Check the finished surface of the base, subbase, or shoulder course as follows:

1. Check the longitudinal surface using a 15 ft (4.5 m) straightedge parallel to the centerline.
2. Check the transverse surface by using one of the following tools:
   - A template, cut true to the required cross-section and set with a spirit level on non-superelevated sections
   - A system of ordinates, measured from a stringline
   - A surveyor's level
3. Ensure that ordinates measured from the bottom of the template, stringline, or straightedge, to the surface do not exceed 1/4 in (6 mm) at any point. Rod readings shall not deviate more than 0.02 ft (6 mm) from required readings.
4. Correct any variations from these requirements immediately according to Subsection 300.3.06.B, "Repairing Defects."

C. Thickness Tolerances

1. Thickness Measurements
   a. Thickness requirements apply to shoulder construction where the Plans specify a uniform thickness, or where the shoulders will be surfaced.
   b. Determine the thickness of the base, subbase, or shoulder course, by making as many checks as necessary to determine the average thickness.
2. Deficient Thickness
   a. If any measurement is deficient in thickness more than 1/2 in (13 mm), make additional measurements to determine the deficient area.
   b. Correct any area deficient between 1/2 in (13 mm) and 1 in (25 mm) to the design thickness by using one of the following methods according to these Specifications:
      - Add additional quantities of the same materials and reconstruct to the required thickness
      - Leave in place and accept payment for the materials and area at ½ the Contract Unit Price for the deficient area.

c. Correct any area deficient in thickness by more than 1 inch (25 mm) by adding additional quantities of the same material and reconstructing to the required thickness in accordance with these Specifications.

d. If payment is made by the ton (megagram), payment for additional material to correct deficiencies will be made at the Contract Unit Price with no additional cost to the Department for scarification, mixing or compaction.

e. If payment is made by the square yard (meter), no payment will be made for additional material required to correct deficiencies or for reconstructing deficient work.

3. Average Thickness

a. The average thickness per linear mile (kilometer) is determined from all measurements within the mile (kilometer) increments except the areas deficient by more than 1/2 in (13 mm) and not corrected.

b. The average thickness shall not exceed the specified thickness by more than 1/2 in (13 mm).

c. If the basis of payment is per ton (megagram), and the average thickness for any mile (kilometer) increment exceeds the allowable 1/2 in (13 mm) tolerance, the excess quantity in that increment will be deducted from the Contractor's payments.

d. The excess quantity is calculated by multiplying the average thickness that exceeds the allowable 1/2 in (13 mm) tolerance by the surface area of the base, subbase, or shoulder.

e. If the basis of payment is per square yard (meter), no deduction will be made for excess thickness.

310.3.07 Contractor Warranty and Maintenance

General Provisions 101 through 150.

310.4 Measurement

A. Graded Aggregate

Where specified for payment by the ton (megagram), graded aggregate base, subbase or shoulder materials are measured in tons (megagrams), mixed and accepted. When hauling material to the roadway, the actual weight of each loaded vehicle is determined with an approved motor truck scale.

Where specified for payment by the square yard (meter) for a certain thickness, the surface length is measured along the centerline, and the width is specified on the Plans. Measure irregular areas, such as turnouts and intersections, by the square yard (meter).

B. Bituminous Prime

Bituminous prime is not measured for separate payment.

310.4.01 Limits

General Provisions 101 through 150.

310.5 Payment

A. Graded Aggregate

Graded aggregate base, subbase, or shoulder course will be paid for at the Contract Unit Price per ton (megagram) or per square yard (meter), complete, in place, and accepted. This payment shall be full compensation for:

- Materials
- Shaping and compacting the existing roadbed
- Loading, hauling, and unloading
- Crushing and processing
- Mixing
- Spreading

- Watering
- Compacting and shaping
- Maintenance
- Priming, when required
- All incidentals necessary to complete The Work

Payment will be made under:

Item No. 310	Graded aggregate (base, subbase, shoulder course)—including material	Per ton (megagram) or square yard (meter)
Item No. 310	Graded aggregate base and shoulder course— including material	Per ton (megagram) or square yard (meter)

310.5.01 Adjustments

General Provisions 101 through 150.

Section 311—Crushed Stone Base

311.1 General Description

Specifications for this work will be included elsewhere in the Contract.

Section 312—Crushed Rap Base

312.1 General Description

Specifications for this work will be included elsewhere in the Contract.

Section 316—Cement Stabilized Graded Aggregate Construction

316.1 General Description

Specifications for this work will be included elsewhere in the Contract.

Section 317—Reconstructed Base Course

317.1 General Description

This work includes reconstructing base courses by:

- Reshaping the existing road surface

- Adding the required amount of new material
- Compacting materials to form a foundation course for other base courses, surface courses, or pavements

Construct base courses according to these Specifications and to the lines, grades, and typical cross-sections shown on the Plans or established by the Engineer.

Apply all of the provisions of Section 300 to this Item.

317.1.01 Definitions

General Provisions 101 through 150.

317.1.02 Related References

A. Standard Specifications

Section 109—Measurement and Payment

Section 300—General Specifications for Base and Subbase Courses

Section 412—Bituminous Prime

B. Referenced Documents

General Provisions 101 through 150.

317.1.03 Submittals

General Provisions 101 through 150.

317.2 Materials

Use materials shown on the Plans or Proposal that conform to the requirements in these Specifications for each type of material.

317.2.01 Delivery, Storage, and Handling

General Provisions 101 through 150.

317.3 Construction Requirements

317.3.01 Personnel

General Provisions 101 through 150.

317.3.02 Equipment

Provide equipment in satisfactory condition for the proper reconstruction of the base course.

317.3.03 Preparation

General Provisions 101 through 150.

317.3.04 Fabrication

General Provisions 101 through 150.

317.3.05 Construction

A. Methods

With the following methods, bring the existing road surface up to the established grade to conform to the cross-section indicated on the Plans.

1. Remove Unsuitable Material

   When existing roadbed material is unsuitable for use, remove and replace it with approved material.

2. Remove and Stockpile Existing Base

   If removing roadbed materials to stockpile for further use, as shown on the Plans, follow these steps:

   a. Scarify and pulverize the roadbed to the specified depth, without removing the subgrade or shoulder material.
   b. Deposit material in stockpiles on thoroughly clean surfaces.
   c. Minimize segregation of the separate ingredients when stockpiling the material.

3. Scarify

   If leaving roadbed material in place, scarify below the upper surface of the finished base course to a uniform depth, and to the entire width of the finished base course, to:

   a. Eliminate all depressions and irregularities
   b. Allow the bonding of any additional material to the old base
   c. Reshape to the required cross-section

   If the surface has been treated with a bituminous material, break it down sufficiently to incorporate into the existing base. If this is impossible, remove it from the base and dispose of it as the Engineer directs.

4. Add New Material

   Where unsuitable material has been removed, shape the subgrade or remaining material as directed to add material. Use new material that conforms to the governing Specification.

5. Replace Stockpiled Material

   After shaping the subgrade, place stockpiled material along with any additional new material on the roadbed. If the existing roadbed material is satisfactory for use, but deficient in thickness after scarifying, bring the surface to the grade and depth indicated on the Plans by:

   a. Removing all material larger than 3 in (75 mm) in diameter
   b. Adding new material

B. Mix and Shape

After adding the required amount of new material, thoroughly mix the old and new base course. Mix according to the requirements set out under the Specifications for the type of base being constructed. During the mixing and shaping operations, add sufficient quantities of water, if needed, to secure proper moisture conditions.

After mixing, shape the entire roadbed to the required grade and cross-section. Remix and reshape all or any part of the base as necessary, to obtain the desired results.

C. Compact and Finish

After mixing and shaping the base material, compact and finish according to the Specifications for the type of base being reconstructed.

D. Prime

After compaction, preserve the base by priming according to Section 412.

317.3.06 Quality Acceptance

General Provisions 101 through 150.

317.3.07 Contractor Warranty and Maintenance

General Provisions 101 through 150.

317.4 Measurement

A. Base Preparation

Base preparation is measured along the center of the road in miles (kilometers) or in square yards (meters).

B. Removed Unsuitable Material

Removed unsuitable material is measured according to the Earthwork Item in the Contract.

C. Additional Material

Where specified for payment by the cubic yard (meter), the new material added to reconstruct the base is measured by the cubic yard (meter) loose volume as specified in Section 109.

Where specified for payment by the ton (megagram), new material is measured in tons (megagrams), as mixed and accepted. The actual weight is determined by weighing each loaded vehicle with an approved motor truck scale as the material is hauled to the roadway. The actual weight will be the pay weight.

D. Removed, Stockpiled, and Replaced Material

The removal, stockpiling, and replacing of material is measured by the cubic yard (meter) loose volume as specified in Section 109.

E. Prime

Bituminous prime is not measured for separate payment; include it in the price of base preparation.

317.4.01 Limits

General Provisions 101 through 150.

317.5 Payment

A. Removed Unsuitable Material

The removal of unsuitable material will be paid for according to the Earthwork Item in the Contract.

B. Removed and Stockpiled Material

The removal and stockpiling of existing base material will be paid for at the Contract Unit Price per cubic yard (meter). This payment will be full compensation for:

- Scarifying
- Pulverizing
- Loading, hauling, and unloading
- Replacing all existing material from stockpiles

C. Replaced Base Material

The replacement of existing base material from stockpiled materials will be paid for at the Contract Unit Price per cubic yard (meter). This will be full compensation for:

- Loading, hauling, and unloading
- Replacing all existing material from stockpile, as required

D. Base Preparation

The preparation of the base will be paid for at the Contract Unit Price per mile (kilometer) or per square yard (meter). This payment will be full compensation for:

- Scarifying
- Shaping
- All machining necessary to bring the existing road surface to the established grade and to the cross- section shown on the Plans

- Priming

Payment will be made under:

Item No. 317	Additional reconstructed base material	Per cubic yard (meter) or ton (megagram)
Item No. 317	Additional reconstructed base material, including material	Per cubic yard (meter) or ton (megagram)
Item No. 317	Removing and stockpiling existing base material	Per cubic yard (meter)
Item No. 317	Replacing existing base material from stockpile	Per cubic yard (meter)
Item No. 317	Base preparation	Per mile (kilometer) or square yard (meter)

317.5.01 Adjustments

General Provisions 101 through 150.

Section 318—Selected Material Surface Course

318.1 General Description

This work includes constructing a surface course with soil and/or stone. Construct according to these Specifications and to the lines, grades, and typical cross-sections shown on the Plans or established by the Engineer.

Apply the requirements of Section 300 to this Item unless modified by this Specification.

318.1.01 Definitions

General Provisions 101 through 150.

318.1.02 Related References

A. Standard Specifications

Section 205 – Roadway Excavation

Section 300—General Specifications for Base and Subbase Courses

Section 303—Topsoil, Sand-Clay or Chert Construction

Section 800—Coarse Aggregate

Section 803—Stabilizer Aggregate

Section 814—Soil Base Materials

Section 815—Graded Aggregate

B. Referenced Documents

General Provisions 101 through 150.

318.1.03 Submittals

Submit a “Request for Material Approval.”

318.2 Materials

Ensure that materials meet the requirements of the following Specifications:

Material	Section
Topsoil and Sand Clay	814.2.01
Chert	814.2.04
Graded Aggregate	815.2.01, and notes 1 and 2, below. 815.2.02, and notes 1 and 2, below.
Coarse Aggregate, Size No. 467, 3, or 4	800.2.01
Stabilizer Aggregate (Type as Designated)	803

NOTE 1. Use Subsection 815.2.02, "Unconsolidated Limerock" as aggregate surface course only if the material gradation meets the requirements of Subsection 815.2.01, "Graded Aggregate."

NOTE 2. When a Project requires an aggregate surface course to be placed and left as a riding surface, use only graded aggregate that meets the requirements of Subsection 815.2.01, "Graded Aggregate."

A. Satisfactory Material

Use in-place roadbed or driveway material when determined to be acceptable by the Engineer.

B. Unsuitable Material

Remove roadbed materials unsuitable for use as determined by the Engineer.

C. Additional Material

To add materials to those in the roadbed or to build up the surface course entirely, use materials approved by the Engineer.

318.2.01 Delivery, Storage, and Handling

General Provisions 101 through 150.

318.3 Construction Requirements

318.3.01 Personnel

General Provisions 101 through 150.

318.3.02 Equipment

General Provisions 101 through 150.

318.3.03 Preparation

If constructing the course entirely of new materials, prepare the subgrade as specified in Subsection 300.3.03.C, "Preparing the Subgrade." If using in-place material, ensure that the surface has been properly shaped. Do not place materials on muddy or frozen subgrade.

318.3.04 Fabrication

General Provisions 101 through 150.

318.3.05 Construction

Spread selected material by approved method to the thickness prescribed on the Plans.

Scarify, mix, and shape the selected material to the required cross section. Roll until the surface is thoroughly compacted, firm, and unyielding. Add water to assist scarifying and compaction.

Where in place materials are approved for use, scarify, mix, shape and compact according to the Specifications for the applicable material.

When stabilizer aggregate is specified, mix it into the surface course according to Subsection 303.3.05.B.3, “Stabilizing.”

Where aggregate surface course is specified, spread the specified aggregate or stabilizer material uniformly to the required depth at locations shown on the Plans or as directed by the Engineer.

318.3.06 Quality Acceptance

General Provisions 101 through 150.

318.3.07 Contractor Warranty and Maintenance

Maintain the finished surface course to the required cross section and usable, until the Project is completed and accepted.

318.4 Measurement

A. Selected Material Surface Course

This Item, furnished, complete in place and accepted, is measured by the cubic yard (meter), loose volume as specified in Section 109.

B. In-Place Selected Material Surface Course

This Item is measured in place, on the roadway, in square yards (meters). The actual length is measured along the surface of the surface course, and multiplied by the Plan width. Where this item is on driveways or other irregular areas, the quantity is the actual number of square yards (meters) completed in place and accepted.

C. Stabilizer Aggregate and Aggregate Surface Course

Stabilizer Aggregate and Aggregate Surface Course are measured by the ton (megagram). Their weights are determined with certified truck scales as specified in Section 109.

D. Unsuitable Material

Removed unsuitable material is measured and paid for as Roadway Excavation-Unclassified, Section 205.

318.4.01 Limits

General Provisions 101 through 150.

318.5 Payment

A. Selected Material Surface Course

This item will be paid for at the Contract Unit Price per cubic yard (meter), complete in place and accepted. This payment will be full compensation for:

- Preparing the subgrade
- Furnishing all material
- Loading, hauling, and unloading
- Scarifying
- Pulverizing
- Harrowing
- Spreading
- Mixing, compacting, and shaping
- Maintaining and watering the course

B. In-Place Selected Material Surface Course

This Item, regardless of the depth of material processed, will be paid for at the Contract Unit Price per square yard (meter), complete in place and accepted.

This payment will be full compensation for:

- Scarifying
- Pulverizing
- Harrowing
- Mixing, compacting, and shaping
- Maintaining and watering the course

C. Stabilizer Aggregate

The Stabilizer Aggregate will be paid for at the Contract Unit Price per ton (megagram), complete in place and accepted. This payment will be full compensation for:

- Furnishing all material
- Loading, hauling, and unloading
- Scarifying
- Spreading, mixing, compacting, and shaping
- Maintaining and watering the course

D. Aggregate Surface Course

Aggregate Surface Course will be paid for at the Contract Unit Price per ton (megagram), complete in place and accepted. This payment will be full compensation for:

- Furnishing all material
- Loading, hauling, and unloading
- Spreading, compacting, and shaping
- Maintaining the course

Payment will be made under:

Item No. 318	Selected materials, surface course	Per cubic yard (meter)
Item No. 318	In-place selected material surface course	Per square yard (meter)
Item No. 318	Aggregate surface course	Per ton (megagram)
Item No. 303	Stabilizer aggregate type ___	Per ton (megagram)

318.5.01 Adjustments

General Provisions 101 through 150.

Section 319—Lime-Fly Ash Soil Construction

319.1 General Description

Specifications for this work will be included elsewhere in the Contract.

Section 325—Stabilized Base Material for Patching

325.1 General Description

This work includes patching with soil-cement construction, cement stabilized graded aggregate construction, or select material stabilized construction. Construct according to the Plans, the Proposal, or as directed by the Engineer.

325.1.01 Definitions

General Provisions 101 through 150.

325.1.02 Related References

A. Standard Specifications

Section 109—Measurement and Payment

Section 209—Subgrade Construction

Section 301—Soil-Cement Construction

Section 316—Cement Stabilized Graded Aggregate Construction

Section 412—Bituminous Prime

Section 810 – Roadway Materials

B. Referenced Documents

General Provisions 101 through 150.

325.1.03 Submittals

General Provisions 101 through 150.

325.2 Materials

Ensure that materials meet the requirements of the following Specifications:

Material	Section
Soil-Cement Construction	301
Cement Stabilized Graded Aggregate Construction	316
Bituminous Prime	412
Subgrade Construction	209

Ensure that the subgrade stabilizer-select material meets the requirements of Subsection 810.2.01, “Roadway Materials—Class IIB3” or better. Any special gradation will be specified by a Special Provision.

325.2.01 Delivery, Storage, and Handling

General Provisions 101 through 150.

325.3 Construction Requirements

Ensure that all labor, equipment, and materials necessary to ensure a continuous patching operation are on hand before patching begins.

325.3.01 Personnel

General Provisions 101 through 150.

325.3.02 Equipment

Provide all the equipment required for the type of patching used.

A concrete mixer with proper weight and moisture control will be considered as a stationary mixing plant for the production of patching material under this Specification.

325.3.03 Preparation

Prepare stabilized base material areas for patching as follows:

1. Trim the sides of the areas to be patched and leave them vertical. Remove all loose material.
2. Remove unsatisfactory material to the depth shown on the Plans or as directed by the Engineer; remove at least 6 in (150 mm) of material.
3. If unsatisfactory material is below a plane that is 1 ft (300 mm) below the existing surface, undercut the area as necessary.
4. Backfill the area with subgrade stabilizer-select material to 1 ft (300 mm) below the existing surface. Use subgrade that meets the requirements of Section 209.

325.3.04 Fabrication

General Provisions 101 through 150.

325.3.05 Construction

Patch during traffic unless otherwise specified. Follow the requirements of Section 301 unless otherwise stated in this Specification.

Patch stabilized base material areas as follows:

1. Thoroughly compact patches at the optimum moisture to at least 100 percent of the maximum laboratory dry density.
2. Compact to the required degree with a conventional steel wheel, pneumatic tired roller, mechanical tampers, or other devices.
3. Lightly spray or mop each patch with bituminous prime. Sand primed areas subject to traffic as directed by the Engineer.

325.3.06 Quality Acceptance

General Provisions 101 through 150.

325.3.07 Contractor Warranty and Maintenance

Repair or replace damaged or destroyed patch at no additional cost to the Department.

325.4 Measurement

A. Base Material

Base material is measured by the cubic yard (meter), loose volume, as specified in Subsection 109.01, “Measurement and Quantities.”

B. Subgrade Stabilizer-Select Material

Subgrade stabilizer-select material is measured by the cubic yard (meter), loose volume, as specified in Subsection 109.01, “Measurement and Quantities.”

325.4.01 Limits

General Provisions 101 through 150.

325.5 Payment

A. Base Material

The accepted quantity of base material will be paid for at the Contract Unit Price per cubic yard (meter). This payment will be full compensation for:

- Flagging and directing traffic
- Preparing the patched area
- Furnishing material, including Portland cement and bituminous prime
- Loading, unloading, and hauling material
- Crushing
- Processing
- Mixing
- Spreading
- Watering
- Compacting
- Maintaining material

B. Subgrade Stabilizer-Select Material

Subgrade stabilizer-select material will be paid for at the Contract Unit Price per cubic yard (meter) complete in place and accepted. Payment will be full compensation for:

- Removing and disposing asphalt pavements, base materials, and unsatisfactory subgrades
- Furnishing all material
- Loading, hauling, and unloading material
- Mixing
- Compacting
- Finishing
- Watering

Payment will be made under:

Item No. 325	Soil-cement stabilized base course for patching	Per cubic yard (meter)
Item No. 325	Graded aggregate, cement stabilized base for patching	Per cubic yard (meter)
Item No. 325	Subgrade stabilizer-select material for patching	Per cubic yard (meter)

325.5.01 Adjustments

General Provisions 101 through 150.

Section 326—Portland Cement Concrete Subbase

326.1 General Description

This work includes constructing a subbase composed of a mixture of Portland cement and graded aggregate, or Portland cement, aggregate, and sand. Construct according to these Specifications and to the lines, grades, and typical cross-sections shown on the Plans or established by the Engineer.

Apply the requirements of Section 300 to this work.

326.1.01 Definitions

General Provisions 101 through 150.

326.1.02 Related References

A. Standard Specifications

Section 109—Measurement and Payment

Section 300—General Specifications for Base and Subbase Courses

Section 430—Portland Cement Concrete Pavement

Section 500—Concrete Structures

Section 800—Coarse Aggregate

Section 801—Fine Aggregate

Section 815—Graded Aggregate

Section 830—Portland Cement

Section 831—Admixtures

Section 832—Curing Agents

B. Referenced Documents

ASTM C 94

AASHTO T 22

AASHTO T 126

GDT 26

GDT 27

GDT 28

GDT 32

326.1.03 Submittals

Prior to construction, submit a grade control plan for the Engineer's approval.

326.2 Materials

Ensure that materials meet the requirements of the following Specifications:

Material	Specification
Fine Aggregate	801.2.01
Portland Cement	830.2.01
Fly Ash	831.2.03
*Graded Aggregate	815.2.01
Coarse Aggregate	800.2.01
Air Entraining Admixture	831.2.01
Chemical Admixtures for Concrete Type A or D	831.2.02
Curing Compound—White, Wax Base	832.2.03
* The gradation requirements of graded aggregate are modified to require 30 to 45 percent by weight passing the No. 10 (2.0 mm) sieve.	

326.2.01 Delivery, Storage, and Handling

General Provisions 101 through 150.

326.3 Construction Requirements

326.3.01 Personnel

General Provisions 101 through 150.

326.3.02 Equipment

Provide the equipment and tools necessary to perform this work, including the following.

A. Concrete Batching Equipment

Provide separate bins and weighing hoppers for aggregates and cement in the batching plant. Use separate scales to weigh cement and aggregate.

The Engineer will inspect scales for weighing concrete materials and water measuring devices before their use. Ensure accuracy of scales and water measuring devices of plus or minus 1.0 percent throughout the operating range.

Measure admixtures to an accuracy of plus or minus 3.0 percent.

B. Slip Form Paver and Spreader

To place the subbase mixture, use a self-propelled slip form paver equipped with tracks sufficient to prevent slippage and bogging when loaded.

- Use the paver to strike off, consolidate, and float finish the fresh mixture—all in one pass.
- Operate the paver from a string grade control, or a combination of string control and existing pavement control.
- Use a self-propelled mechanical spreader to distribute the mixture on the grade.

326.3.03 Preparation

Before placing Portland cement concrete subbase, prepare the roadbed as required by the Plans and the Specifications.

326.3.04 Fabrication

General Provisions 101 through 150.

326.3.05 Construction

Produce Portland cement concrete subbase by combining authorized proportions of approved materials in homogeneous, uniform batches.

Ensure that the grade immediately under the subbase does not contribute to deficient thicknesses of either the subbase or pavement. Employ methods to ensure that subbase placement equipment does not cause deficient thickness to areas supporting the equipment.

Produce the subbase as follows:

A. Mixing

The Engineer will determine the design proportions of the required materials based upon mixes prepared in the laboratory or trials performed during construction.

Determine the batch weights required to produce the necessary quantity.

Measure the cement, aggregates, and water separately, to the accuracy specified above. Continue mixing until producing a homogeneous and uniform mixture.

Mix concrete produced in a stationary central mix plant for a minimum of 60 seconds, after all materials have entered the drum. A reduction of mix time may be allowed if representative tests show that the concrete meets the requirements of ASTM C 94, Requirements for Uniformity. In all cases, mix for at least 50 seconds.

Ensure that transit mixed concrete meets the requirements of Subsection 500.3.04.E.3.

B. Placing

Spread the mixture on the grade with minimum rehandling. Hand spread with shovels if necessary. Do not place Portland cement concrete on muddy, puddled, or frozen subgrade.

NOTE: Do not allow workers to walk in fresh concrete with shoes coated with dirt or other foreign substances.

C. Consolidating

Consolidate the mixture by vibrating the full length, width, and depth of the section. Ensure that vibration does not produce puddling or excessive grout accumulation. If consolidation and density are not satisfactory, stop placement and furnish methods or equipment to produce subbase conforming to the Specifications.

D. Finishing

Finish the mixture to the proper cross-section. Use equipment that produces a uniform surface free of irregular, rough, or porous areas. Use a tube float or other finishing device approved by the Engineer to provide a smooth surface. Unless the Engineer permits, do not add water to the surface to aid finishing.

E. Forming Construction Joints

Form a construction joint when mixture placement is interrupted for more than one hour. Construct joints according to Subsection 430.3.05 unless the Engineer waives the requirements concerning reinforcement. Ensure that the straightedge tolerance is 3/8 in (10 mm) in 20 ft (6 m).

F. Curing

Cure the mixture according to Subsection 430.3.05.L.1. Apply compound for the impervious membrane method at the rate of 200 ft^2/gal (5 m^2/L) or less. Apply a second application of curing compound just before placing the pavement to act as a bond breaker. Apply the second application at the same rate as the first application.

G. Preserving the Subbase

Maintain the subbase until it is covered by the succeeding pavement course.

1. Place the pavement course on the subbase only after the mixture has cured for 7 days.

2. Operate the spreader and slip form paver on the subbase after 7 days, but do not use the subbase as a haul road for loaded trucks, equipment, or other vehicles for 14 days.
   a. Construct earth ramps and barricades to move traffic across the subbase.
   b. Remove and replace areas damaged by vehicles or equipment at no additional cost to the Department.

H. Weather Limitations

1. Do not place the subbase mixture when the air temperature in the shade is less than 40 °F (5 °C) and falling. Wait until the air temperature is at least 35 °F (2 °C) and rising.
2. Protect the subbase from rain until the surface has sufficiently hardened to prevent marring.
3. Protect the subbase from cold weather according to Subsection 430.3.05.L.4.

326.3.06 Quality Acceptance

Check the finished surface transversely by a system of ordinates measured from a stringline. Also check the surface with a 20 ft (6 m) straightedge placed parallel to the centerline.

Remove or correct deviations in excess of 3/8 in (10 mm) in 20 ft (6 m). If the Engineer permits, correct low areas by increasing the thickness of the surface course at no additional cost to the Department.

A. Composition of Subbase Mixture

The Department will determine the required proportions based on the test results of sample material. Secure and deliver a sufficient amount of materials to the laboratory for evaluation.

An approved mixture shall conform to the following:

1. Aggregate

   Use aggregate that meets the requirements of Subsection 815.2.01. Use aggregates manufactured at the quarry or blended at the plant site to produce the desired results. Place aggregates in one or more stockpiles if the gradation is uniform at the time of batching.
2. Cement

   Use at least 275 lbs/yd³ (165 kg/m³) of Portland cement for Portland cement concrete subbase.

   Use fly ash as a partial replacement for Portland cement if:
   a. The quantity of cement replaced is 15 percent or less by weight.
   b. Cement is replaced by fly ash at the rate of 1.25 lbs to 2 lbs (1.25 kg to 2.0 kg) of fly ash to each pound (kilogram) of cement.

   Do not use Type IP cement in fly ash mixes.
3. Water-Cement Ratio

   The maximum water-cement ratio shall not exceed 1.3. Calculate the water-cement ratio based on the total cement material used, including fly ash.
4. Air Content

   Maximum design air content shall be 7.0 percent.
5. Slump

   Maximum design slump shall be 1.5 in (40 mm).
6. Compressive Strength

   Ensure that the mixture is capable of demonstrating a laboratory compressive strength at 28 days of 1,000 psi (7 MPa) +.18R*. (*Where: R = the difference between the largest observed value and the smallest observed value for all compressive strength specimens at 28 days, for a given combination of materials and mix proportions prepared together.)

   Determine compressive strength from the results of six cylinders prepared and tested according to AASHTO: T 126 and T 22.

B. Field Adjustment of Design Proportions

The Engineer will determine changes in design proportions based on construction conditions and notify the Contractor in writing of the effective date and time of the changes.

C. Mix Tolerances

The Engineer will verify that the mix is proportioned according to the approved mix design. Assume responsibility for determining the required batch weights.

Ensure that variations in consistency and air content of the mixture are within the following limits at the time of placement.

1. Consistency

   Slump shall not exceed 2 in (50 mm) as determined by GDT 27.

2. Air Content

   Air content shall not exceed 8.0 percent, as determined by the applicable test method inGDT 26, GDT 28, or GDT 32.

D. Acceptance of Subbase Mixture

The Department will accept the mixture based upon results required in the Sampling Testing and Inspection Manual for:

- Slump
- Air tests
- Water-cement ratio
- Surveillance of plant operations and mix production

E. Thickness

Determine thickness by taking probe measurements in the fresh mixture every 250 ft (75 m) or less. Adjust the strike off to compensate for variations in thicknesses. Obtain cores to determine the boundaries of areas subject to thickness correction. A construction tolerance of plus or minus 0.5 in (13 mm) from the Plan depth is permitted.

1. Deficient Thickness

   Correct areas deficient in thickness by more than 0.5 in (13 mm) but less than 1 in (25 mm) by increasing the surface course depth. Remove or correct areas deficient in thickness by more than 1 in (25 mm) as the Engineer directs.

   The Engineer may base the decision to remove or correct the area on a Plan submitted by the Contractor detailing how to obtain the final pavement profile and grade.

2. Excessive Thickness

   Remove areas with excessive thickness when the Engineer requires. Removal is not required when the excessive thickness does not result in a surface course deficient in thickness.

326.3.07 Contractor Warranty and Maintenance

General Provisions 101 through 150.

326.4 Measurement

Portland cement concrete subbase is measured by the square yard (meter) as noted in Section 109, complete in place and accepted.

326.4.01 Limits

General Provisions 101 through 150.

326.5 Payment

Portland cement concrete subbase will be paid for at the Contract Unit Price per square yard (meter) for each specified thickness shown on the plans. This payment will be full compensation for:

- Providing Portland cement and all other materials
- Applying first and second applications of curing compound
- Providing all equipment and labor
- Mixing
- Hauling
- Providing other incidentals necessary to complete the Item
- Replacing subbase when required

Payment will be made under:

Item No. 326	Portland cement concrete subbase ____ in (mm) thick	Per square yard (meter)

326.5.01 Adjustments

General Provisions 101 through 150.

Section 327—Mining, Crushing, and Stockpiling Aggregates

327.1 General Description

Specifications for this work will be included elsewhere in the Contract.

Section 328—Foamed Asphalt Stabilized Base Course

328.1 General Description

Specifications for this work will be included elsewhere in the Contract.

Section 329—Reclaiming, Crushing And Stockpiling Of Concrete And Asphalt Pavements

329.1 General Description

Specifications for this work will be included elsewhere in the Contract.

Section 400—Hot Mix Asphaltic Concrete Construction

400.1 General Description

This work includes constructing one or more courses of bituminous plant mixture on the prepared foundation or existing roadway surface. The mixture shall conform with lines, grades, thicknesses, and typical cross sections shown on the Plans or established by the Engineer.

This section includes the requirements for all bituminous plant mixtures regardless of the gradation of the aggregates, type and amount of bituminous material, or pavement use.

Acceptance of work is on a lot-to-lot basis according to the requirements of this Section and Section 106.

400.1.01 Definitions

Segregated Mixture: Mixture lacking homogeneity in HMA constituents of such a magnitude that there is a reasonable expectation of accelerated pavement distress or performance problems. May be quantified by measurable changes in temperature, gradation, asphalt content, air voids, or surface texture.

New Construction: A roadway section more than 0.5 mile (800 m) long that is not longitudinally adjacent to the existing roadway. If one or more lanes are added longitudinally adjacent to the existing lane, the lane(s) shall be tested under the criteria for a resurfacing project. If work is performed on the existing roadway including leveling, grade changes, widening and/or resurfacing then that lane shall be tested under the criteria for a resurfacing project.

Trench Widening: Widening no more than 4 ft. (1.2 m) in width.

Comparison sample: Opposite quarters of material sampled by the Contractor.

Independent Sample (Quality Assurance Sample): A sample taken by the Department to verify an acceptance decision without regard to any other sample that may also have been taken to represent the material in question.

Referee sample: A sample of the material retained during the quartering process which is used for evaluation if a comparison of Contractor and Departmental split sample test results is outside allowable tolerances.

400.1.02 Related References

A. Standard Specifications

Section 106—Control of Materials

Section 109—Measurement and Payment

Section 152—Field Laboratory Building

Section 413—Bituminous Tack Coat

Section 424—Bituminous Surface Treatment

Section 802—Coarse Aggregate for Asphaltic Concrete

Section 828—Hot Mix Asphaltic Concrete Mixtures

B. Referenced Documents

AASHTO T 315

AASHTO T 209

AASHTO T 202

AASHTO T 49

Department of Transportation Standard Operating Procedure (SOP) 15

Department of Transportation Standard Operating Procedure (SOP) 27

Department of Transportation Standard Operating Procedure (SOP) 40

GDT 38

GDT 73

GDT 78

GDT 83

GDT 119

GDT 125

GDT 126

GDT 134

GSP 15

GSP 21

QPL 1

QPL 2

QPL 7

QPL 26

QPL 30

QPL 39

QPL 41

QPL 45

QPL 65

QPL 67

QPL 70

QPL 77

400.1.03 Submittals

A. Invoices

Furnish formal written invoices from a supplier for all materials used in production of HMA when requested by the Department. Show the following on the Bill of Lading:

- Date shipped
- Quantity in tons (megagrams)
- Included with or without additives (for asphalt cement)

Purchase asphaltic cement directly from a supplier listed on **Qualified Products List 7** and provide copies of Bill of Lading at the Department's request.

B. Paving Plan

Before starting asphaltic concrete construction, submit a written paving plan to the Engineer for approval. Include the following on the paving plan:

- Proposed starting date
- Location of plant(s)
- Rate of production
- Average haul distance(s)
- Number of haul trucks
- Paver speed feet (meter)/minute for each placement operation
- Mat width for each placement operation
- Number and type of rollers for each placement operation

- Sketch of the typical section showing the paving sequence for each placement operation
- Electronic controls used for each placement operation
- Temporary pavement marking plan

If staged construction is designated in the Plans or contract, provide a paving plan for each construction stage.

If segregation is detected, submit a written plan of measures and actions to prevent segregation. Work will not continue until the plan is submitted to and approved by the Department.

C. Job Mix Formula

Submit to the Engineer a written job mix formula proposed for each mixture type to be used based on an approved mix design. Furnish the following information for each mix:

- Specific project for which the mixture will be used
- Source and description of the materials to be used
- Mixture I.D. Number
- Proportions of the raw materials to be combined in the paving mixture
- Single percentage of the combined mineral aggregates passing each specified sieve
- Single percentage of asphalt by weight of the total mix to be incorporated in the completed mixture
- Single temperature at which to discharge the mixture from the plant
- Theoretical specific gravity of the mixture at the designated asphalt content
- Name of the person or agency responsible for quality control of the mixture during production

Do the following to have the formulas approved in accordance with SOP 40 “Approval of Contractor Job Mix Formulas” and to ensure their quality:

1. Submit proposed job mix formulas for review at least two weeks before beginning the mixing operations.
2. Do not start hot mix asphaltic concrete work until the Engineer has approved a job mix formula for the mixture to be used. No mixture will be accepted until the Engineer has given approval.
3. Provide mix designs for all SMA, Superpave and 4.75 mm mixes to be used. The Department will provide mix design results for other mixes to be used.
4. After a job mix formula has been approved, assume responsibility for the quality control of the mixtures supplied to the Department according to Subsection 106.01, “Source of Supply and Quantity of Materials.”

D. Quality Control Program

Submit a Quality Control Plan to the Office of Materials for approval. The Quality Control Program will be included as part of the certification in the annual plant inspection report.

400.2 Materials

Ensure materials comply with the specifications listed in Table 1.

Table 1—Materials Specifications

Material	Subsection
Asphalt Cement, Grade Specified	820.2
Coarse Aggregates for Asphaltic Concrete	802.2.02
Fine Aggregates for Asphaltic Concrete	802.2.01
Mineral Filler	883.1
Heat Stable Anti-Stripping Additive	831.2.04
Hydrated Lime	882.2.03
Silicone Fluid (When approved by the Office of Materials)	831.2.05
Bituminous Tack Coat: PG 58-22, PG 64-22, PG 67-22	820.2
Hot Mix Asphaltic Concrete Mixtures	828
Fiber Stabilizing Additives	819

When approved by the Office of Materials and required in the Contract, provide Uintaite material, hereafter referred to by the common trade name Gilsonite, as a reinforcing agent for bituminous mixtures. Supply a manufacturer's certification that the Gilsonite is a granular solid which meets the following requirements:

Softening Point (AASHTO: T-53)	300-350 °F (150-175 °C)
Specific Gravity, 77 °F (25 ^{o}C) (AASHTO: T-228)	1.04 ± 0.02
Flash Point, COC (AASHTO: T-48)	550 °F (290 °C) Min.
Ash Content (AASHTO: T-111)	1.0% Max.
Penetration, 77 °F (25 ^{o}C), 100 gm., 5 sec. (AASHTO: T-49)	0

400.2.01 Delivery, Storage, and Handling

Storage of material is allowed in a properly sealed and insulated system for up to 24 hours except that Stone Matrix Asphalt (SMA), Open-Graded Friction Course (OGFC), or Porous European Mix (PEM) mixtures shall not be stored more than 12 hours. Mixtures other than SMA, OGFC, or PEM may be stored up to 72 hours in a sealed and insulated system, equipped with an auxiliary inert gas system, with the Engineer's approval. Segregation, lumpiness, drain-down, or stiffness of stored mixture is cause for rejection of the mixture. The Engineer will not approve using a storage or surge bin if the mixture segregates, loses excessive heat, or oxidizes during storage.

The Engineer may obtain mixture samples or recover asphalt cement according to GDT 119. AASHTO T315, AASHTO T 202 and AASHTO T 49 will be used to perform viscosity and penetration tests to determine how much asphalt hardening has occurred.

A. Vehicles for Transporting and Delivering Mixtures

Ensure trucks used for hauling bituminous mixtures have tight, clean, smooth beds.

Follow these guidelines when preparing vehicles to transport bituminous mixtures:

1. Use an approved releasing agent from QPL 39 in the transporting vehicle beds, if necessary, to prevent the mixture from sticking to the bed. Ensure that the releasing agent is not detrimental to the mixture. When applying the agent, drain the excess agent from the bed before loading. Remove from the project any transporting vehicles determined to contain unapproved releasing agents.
2. Protect the mixture with a waterproof cover large enough to extend over the sides and ends of the bed. Securely fasten the waterproof cover before the vehicle begins moving.
3. Insulate the front end and sides of each bed with an insulating material with the following specifications:

- Consists of builders insulating board or equivalent
- Has a minimum "R" value of 4.0
- Can withstand approximately 400 °F (200 °C) temperatures

Install the insulating material so it is protected from loss and contamination. A "Heat Dump Body" may be used in lieu of insulation of the bed. "Heat Dump Body" refers to any approved transport vehicle that is capable of diverting engine exhaust and transmitting heat evenly throughout the dump body to keep asphalt at required temperature. Mark the "Heat Dump Body" clearly with "OPEN" and "CLOSE" position at the exhaust diverter. Install a padlock and lock it in the "OPEN" position when the "Heat Dump Body" is used to transport bituminous mixtures.

4. Mark each transporting vehicle with a clearly visible identification number.
5. Create a hole in each side of the bed so that the temperature of the loaded mixture can be checked. The placement of these holes shall be located to assure that the thermometer is being placed in the hot mix asphaltic concrete.

Ensure the mixture is delivered to the roadway at a temperature within ± 20 °F (± 11 °C) of the temperature on the job mix formula.

If the Engineer determines that a truck may be hazardous to the Project or adversely affect the quality of the work, remove the truck from the project.

B. Containers for Transporting, Conveying, and Storing Bituminous Material

To transport, convey, and store bituminous material, use containers free of foreign material and equipped with sample valves. Bituminous material will not be accepted from conveying vehicles if material has leaked or spilled from the containers.

400.3 Construction Requirements

400.3. 01 Personnel

General Provisions 101 through 150.

400.3.02 Equipment

Hot mix asphaltic concrete plants producing mix for Department use are governed by Quality Assurance for Asphaltic Concrete Plants in Georgia, Laboratory Standard Operating Procedure No. 27.

The Engineer will approve the equipment used to transport and construct hot mix asphaltic concrete. Ensure the equipment is in satisfactory mechanical condition and can function properly during production and placement operations. Place the following equipment at the plant or project site:

A. Field Laboratory

Provide a field laboratory according to Section 152.

B. Plant Equipment

1. Scales

   Provide scales as follows:

   a. Furnish (at the Contractor's expense) scales to weigh bituminous plant mixtures, regardless of the measurement method for payment.
   b. Ensure the weight measuring devices that provide documentation comply with Subsection 109.01, "Measurement and Quantities."
   c. Provide weight devices recording the mixture net weights delivered to the truck when not using platform scales. A net weight system will include, but is not limited to:
      - Hopper or batcher-type weight systems delivering asphaltic mixture directly to the truck
      - Fully automatic batching equipment with a digital recording device
   d. Use a net weight printing system only with automatic batching and mixing systems approved by the Engineer.

e. Ensure the net weight scale mechanism or device manufacturer, installation, performance, and operation meets the requirements in Subsection 109.01, “Measurement and Quantities”

f. Provide information on the Project tickets according to Department of Transportation SOP-15.

2. Time-Locking Devices

Furnish batch type asphalt plants with automatic time-locking devices controlling the mixing time automatically. Construct these devices to ensure the operator cannot shorten or eliminate any portion of the mixing cycle.

3. Surge- and Storage-Systems

Provide surge and storage bins as follows:

a. Ensure bins for mixture storage are insulated and have a working seal, top and bottom, to prevent outside air infiltration and to maintain an inert atmosphere during storage. Bins not intended as storage bins may be used as surge bins to hold hot mixtures for part of the working day. However, empty these surge bins completely at the end of the working day.

b. Ensure surge and storage bins can retain a predetermined minimum level of mixture in the bin when the trucks are loaded.

c. Ensure surge and storage systems do not contribute to mix segregation, lumpiness, drain-down, or stiffness.

d. Ensure the scale mechanism or device manufacture, installation, performance, and operation meets the requirements in subsection 109.01”Measurement and Quantities”.

4. Controls for Dust Collector Fines

Control dust collection as follows:

a. When collecting airborne aggregate particles and returning them to the mixture, have the return system meter all or part of the collected dust uniformly into the aggregate mixture and waste the excess. The collected dust percentage returned to the mixture is subject to the Engineer’s approval.

b. When the collected dust is returned directly to the hot aggregate flow, interlock the dust feeder with the hot aggregate flow and meter the flow to maintain a flow that is constant, proportioned, and uniform.

5. Mineral Filler Supply System

When mineral filler is required as a mixture ingredient:

a. Use a separate bin and feed system to store and proportion the required quantity into the mixture with uniform distribution.

b. Control the feeder system with a proportioning device meeting these specifications:

- Is accurate to within ± 10 percent of the filler required
- Has a convenient and accurate means of calibration
- Interlocks with the aggregate feed or weigh system to maintain the correct proportions for all rates of production and batch sizes

c. Provide flow indicators or sensing devices for the mineral filler system and interlock them with the plant controls to interrupt the mixture production if mineral filler introduction fails to meet the required target value after no longer than 60 seconds.

d. Add mineral filler to the mixture as follows, according to the plant type:

- Batch Type Asphalt Plant. Add mineral filler to the mixture in the weigh hopper.
- Continuous Plant Using Pugmill Mixers. Feed the mineral filler into the hot aggregate before it is introduced into the mixer to ensure dry mixing is accomplished before the bituminous material is added.
- Continuous Plants Using the Drier-Drum Mixers. Add the mineral filler to ensure dry mixing is accomplished before the bituminous material is added and ensure the filler does not become entrained into the air stream of the drier.

6. Hydrated Lime Treatment System

When hydrated lime is required as a mixture ingredient:

a. Use a separate bin and feed system to store and proportion the required quantity into the mixture.

b. Ensure the aggregate is uniformly coated with hydrated lime aggregate before adding the bituminous material to the mixture. Ensure the addition of hydrated lime will not become entrained in the exhaust system of the drier or plant.

c. Control the feeder system with a proportioning device meeting these specifications:

- Is accurate to within ± 10 percent of the amount required
- Has a convenient and accurate means of calibration
- Interlocks with the aggregate feed or weigh system to maintain the correct proportions for all rates of production and batch sizes and to ensure that mixture produced is properly treated with lime

d. Provide flow indicators or sensing devices for the hydrated lime system and interlock them with the plant controls to interrupt mixture production if hydrated lime introduction fails to meet the required target value after no longer than 60 seconds.

7. Net Weight Weighing Mechanisms

Certify the accuracy of the net weight weighing mechanisms by an approved registered scale serviceperson at least once every 6 months. Check the accuracy of net weight weighing mechanisms at the beginning of Project production and thereafter as directed by the Engineer. Check mechanism accuracy as follows:

a. Weigh a load on a set of certified commercial truck scales. Ensure that the difference between the printed total net weight and that obtained from the commercial scales is no greater than 4 lbs/1,000 lbs (4 kg/Mg) of load.

Check the accuracy of the bitumen scales as follows:

- Use standard test weights.
- If the checks indicate printed weights are out of tolerance, have a registered scale serviceperson check the batch scales and certify the accuracy of the printer.
- While the printer system is out of tolerance and before its adjustment, continue production only if using a set of certified truck scales to determine the truck weights.

b. Ensure plants using batch scales maintain ten 50 lb (25 kg) standard test weights at the plant site to check batching scale accuracy.

c. Ensure plant scales that are used only to proportion mixture ingredients, and not to determine pay quantities, are within two percent throughout the range.

8. Fiber Supply System

When stabilizing fiber is required as a mixture ingredient:

a. Use a separate feed system to store and proportion by weight the required quantity into the mixture with uniform distribution.

b. Control the feeder system with a proportioning device that meets these Specifications:

- Is accurate to within ± 10 percent of the amount required. Automatically adjusts the feed rate to maintain the material within this tolerance at all times
- Has a convenient and accurate means of calibration
- Provide in-process monitoring, consisting of either a digital display of output or a printout of feed rate, in pounds (kg) per minute, to verify feed rate
- Interlocks with the aggregate feed or weigh system to maintain the correct proportions for all rates of production and batch sizes

c. Provide flow indicators or sensing devices for the fiber system and interlock them with the plant controls to interrupt the mixture production if fiber introduction fails or if the output rate is not within the tolerances given above.

d. Introduce the fiber as follows:

- When a batch type plant is used, add the fiber to the aggregate in the weigh hopper. Increase the batch dry mixing time by 8 to 12 seconds from the time the aggregate is completely emptied into the mixer to ensure the fibers are uniformly distributed prior to the injection of asphalt cement into the mixer.

- When a continuous or drier-drum type plant is used, add the fiber to the aggregate and uniformly disperse prior to the injection of asphalt cement. Ensure the fibers will not become entrained in the exhaust system of the drier or plant.

9. Crumb Rubber Modifier Supply System

When specified, crumb rubber modifier may be substituted at the Contractor's discretion to produce a PG 76-22 asphaltic cement at the production facility in accordance with Section 820:

a. Use a separate feed system to store and proportion by weight of the total asphaltic cement, the required percentage of crumb rubber into the mixture.

b. Control the feeder system with a proportioning device meeting these Specifications:

- Is accurate to within ± 6 percent of the amount required. Automatically adjusts the feed rate to maintain the material within this tolerance at all times.
- Has a convenient and accurate means of calibration.
- Provide in-process monitoring, consisting of either a digital display of output or a printout of feed rate, in pounds per minute, to verify feed rate. The supply system shall report the feed in 1 lb (454 gr.) increments using load cells that will enable the user to monitor the depletion of the modifier. Monitoring the system volumetrically will not be allowed.
- Interlocks with the aggregate weigh system and asphaltic cement pump to maintain the correct proportions for all rates of production and batch sizes.

c. Provide flow indicators or sensing devices for the system and interlock them with the plant controls to interrupt the mixture production if the crumb rubber introduction output rate is not within the ± 6 percent tolerance given above. This interlock will immediately notify the operator if the targeted rate exceeds introduction tolerances. All plant production will cease if the introduction rate is not brought back within tolerance after 30 seconds. When the interlock system interrupts production and the plant has to be restarted, upon restarting operations; the modifier system shall run until a uniform feed can be observed on the output display. All mix produced prior to obtaining a uniform feed shall be rejected.

d. Introduce the crumb rubber modifier as follows:

- When a batch type plant is used, add the rubber to the aggregate in the weigh hopper. Increase the batch dry mixing time by 15 to 20 seconds from the time the aggregate is completely emptied into the mixer to ensure the modifiers are uniformly distributed prior to the injection of asphalt cement into the mixer. Increase the batch wet mix time by 15 to 20 seconds to ensure the crumb rubber modifier is uniformly blended with the asphaltic cement.
- When a continuous or drier-drum type plant is used, add the rubber to the aggregate and uniformly disperse prior to the injection of asphalt cement. The point of introduction in the drum mixer will be approved by the Engineer prior to production. Ensure the crumb rubber modifier will not become entrained in the exhaust system of the drier or plant and will not be exposed to the drier flame at any point after induction.

e. No separate measurement and payment will be made if Contractor elects to utilize crumb rubber.

C. Equipment at Project Site

1. Cleaning Equipment

Provide sufficient hand tools and power equipment to clean the roadway surface before placing the bituminous tack coat. Use power equipment that complies with Subsection 424.3.02.F, "Power Broom and Power Blower."

2. Pressure Distributor

To apply the bituminous tack coat, use a pressure distributor complying with Subsection 424.3.02.B, "Pressure Distributor."

3. Bituminous Pavers

To place hot mix asphaltic concrete, use bituminous pavers that can spread and finish courses that are:

- As wide and deep as indicated on the Plans

- True to line, grade, and cross section
- Smooth
- Uniform in density and texture

a. Continuous Line and Grade Reference Control. Furnish, place, and maintain the supports, wires, devices, and materials required to provide continuous line and grade reference control to the automatic paver control system.

b. Automatic Screed Control System. Equip the bituminous pavers with an automatic screed control system actuated from sensor-directed mechanisms or devices that will maintain the paver screed at a pre-determined transverse slope and elevation to obtain the required surface.

c. Transverse Slope Controller. Use a transverse slope controller capable of maintaining the screed at the desired slope within ± 0.1 percent. Do not use continuous paving set-ups resulting in unbalanced screed widths or off-center breaks in the main screed cross section unless approved by the Engineer.

d. Screed Control. Equip the paver to permit the following four modes of screed control. The method used shall be approved by the Engineer.

- Automatic grade sensing and slope control
- Automatic dual grade sensing
- Combination automatic and manual control
- Total manual control

Ensure the controls are referenced with a taut string or wire set to grade, or with a ski-type device or mobile reference at least 30 ft (9 m) long when using a conventional ski. Approved non-contacting laser or sonar-type skis listed on QPL 91 "Georgia's List of Approved Non-contacting Laser and Sonar-type Electronic Grade and Slope Controls" may be used in lieu of conventional 30 ft (9m) skis. Under limited conditions, a short ski or shoe may be substituted for a long ski on the second paver operating in tandem, or when the reference plane is a newly placed adjacent lane.

Automatic screed control is required on all Projects; however, when the Engineer determines that Project conditions prohibit the use of such controls, the Engineer may waive the grade control, or slope control requirements, or both.

e. Paver Screed Extension. When the laydown width requires a paver screed extension, use bolt-on screed extensions to extend the screeds, or use an approved mechanical screed extension device. When the screed is extended, add auger extensions to assure a length of no more than 18 inches (0.5 m) from the auger to the end gate of the paver. Auger extensions may be omitted when paving variable widths. Ensure the paver is equipped with tunnel extensions when the screed and augers are extended.

NOTE: Do not use extendible strike-off devices instead of approved screed extensions. Only use a strike-off device in areas that would normally be luted in by hand labor.

4. Compaction Equipment

Ensure that the compaction equipment is in good mechanical condition and can compact the mixture to the required density. The compaction equipment number, type, size, operation, and condition is subject to the Engineer's approval

5. Materials Transfer Vehicle (MTV)

a. Use a Materials Transfer Vehicle (MTV) when placing asphaltic concrete mixtures on Projects on the state route system with the following conditions. If a project fails to meet any one of the following conditions, the MTV's use is not required.

1) When to use:

- The ADT is equal to or greater than 6000,
- The project length is equal to or greater than 3000 linear feet (915 linear meters),

- The total tonnnage (megagrams) of all asphaltic concrete mixtures is greater than 2000 tons (1815 Mg).

2) Where to use:
   - Mainline of the traveled way
   - Collector/distributor (C/D) lanes on Interstates and limited access roadways
   - Leveling courses at the Engineer's discretion

3) Do not use the MTV for the following conditions:
   - A resurfacing project that only 9.5 mm mix is required.
   - A project with lane width that is equal or less than 11 feet (3.4 m).
   - A passing lane only project.
   - When noted on the plans.

b. Ensure the MTV and conventional paving equipment meet the following requirements:

1) MTV
   - Has a truck unloading system which receives mixture from the hauling equipment and independently deliver mixtures from the hauling equipment to the paving equipment.
   - Has mixture remixing capability approved by the Office of Materials and is listed on QPL 88 "Georgia's List of Approved Materials Transfer Vehicles".
   - Provides to the paver a homogeneous, non-segregated mixture of uniform temperature with no more than 20 °F (11 ^{o}C) difference between the highest and lowest temperatures when measured transversely across the width of the mat in a straight line at a distance of one foot to twenty-five feet (0.3 m to 7.6 m) from the screed while the paver is operating. Ensure that the MTV is capable of providing the paver a consistent material flow that is sufficient to prevent the paver from stopping between truck exchanges.

2) Conventional Paving Equipment
   - Has a paver hopper insert with a minimum capacity of 14 tons (13 Mg) installed in the hopper of conventional paving equipment when an MTV is used.

c. If the MTV malfunctions during spreading operations, discontinue placement of hot mix asphaltic concrete after there is sufficient hot mix placed to maintain traffic in a safe manner. However, placement of hot mix asphaltic concrete in a lift not exceeding 2 in. (50 mm) may continue until any additional hot mix in transit at the time of the malfunction has been placed. Cease spreading operations thereafter until the MTV is operational.

d. Ensure the MTV is empty when crossing a bridge and is moved across without any other Contractor vehicles or equipment on the bridge. Move the MTV across a bridge in a travel lane and not on the shoulder. Ensure the speed of the MTV is no greater than 5 mph (8 kph) without any acceleration or deceleration while crossing a bridge.

400.3.03 Preparation

A. Prepare Existing Surface

Prepare the existing surface as follows:

1. Clean the Existing Surface. Before applying hot mix asphaltic concrete pavement, clean the existing surface to the Engineer's satisfaction.
2. Patch and Repair Minor Defects

   Before placing leveling course:

   a. Correct potholes and broken areas requiring patching in the existing surface and base as directed by the Engineer.

b. Cut out, trim to vertical sides, and remove loose material from the areas to be patched.

c. Prime or tack coat the area after being cleaned. Compact patches to the Engineer's satisfaction. Material for patches does not require a job mix formula, but shall meet the gradation range shown in Section 828. The Engineer must approve the asphalt content to be used.

3. Apply Bituminous Tack Coat

Apply the tack coat according to Section 413. The Engineer will determine the application rate, which must be within the limitations Table 2.

Table 2—Application Rates for Bituminous Tack, gal/yd² (L/m²)

	Minimum	Maximum
Under OGFC and PEM Mixes	0.06 (0.270)	0.08 (0.360)
All Other Mixes	0.04 (0.180)	0.06(0.270)
*On thin leveling courses and freshly placed asphaltic concrete mixes, reduce the application rate to 0.02 to 0.04 gal/yd² (0.09 to 0.18 L/m²).		

B. Place Patching and Leveling Course

1. When the existing surface is irregular, bring the surface area to the proper cross section and grade with a leveling course of hot mix asphaltic concrete materials.
2. Place leveling at the locations and in the amounts directed by the Engineer.
3. Use leveling course mixtures meeting the requirements of the job mix formulas defined in:
   - Subsection 400.3.05.A, "Observe Composition of Mixtures"
   - Section 828
   - Leveling acceptance schedules in Subsection 400.3.06.A, "Acceptance Plans for Gradation and Asphalt Cement Content"
4. If the leveling and patching mix type is undesignated, determine the mix type by the thickness or spread rate according to Table 3, but do not use 4.75 mm mix on interstate projects.

Table 3—Leveling and Patching Mix Types

Thickness	Rate of Spread	Type of Mix
Up to 0.75 in (19 mm)	Up to 85 lbs/yd² (45 kg/m²)	4.75 mm Mix or 9.5 mm Superpave Type 1
0.75 to 1.5 in (19 to 38 mm)	85 to 165 lbs/yd²(45 to 90 kg/m²)	9.5 mm Superpave Type 2
1.5 to 2 in (38 to 50 mm)	165 to 220 lbs/yd² (90 to 120 kg/m²)	12.5 mm Superpave *
2 to 2.5 in (50 to 64 mm)	220 to 275 lbs/yd² (120 to 150 kg/m²)	19 mm Superpave *
Over 2.5 in (64 mm)	Over 275 lbs/yd² (150 kg/m²)	25 mm Superpave

* These mixtures may be used for isolated patches no more than 6 in. (150 mm) deep and no more than 4 ft. (1.2 m) in diameter or length.

400.3.04 Fabrication

General Provisions 101 through 150.

400.3.05 Construction

Provide the Engineer at least one day's notice prior to beginning construction, or prior to resuming production if operations have been temporarily suspended.

A. Observe Composition of Mixtures

1. Calibration of plant equipment

If the material changes, or if a component affecting the ingredient proportions has been repaired, replaced, or adjusted, check and recalibrate the proportions.

Calibrate as follows:

a. Before producing mixture for the Project, calibrate by scale weight the electronic sensors or settings for proportioning mixture ingredients.

b. Calibrate ingredient proportioning for all rates of production.

2. Mixture control

Compose hot mix asphaltic concrete from a uniform mixture of aggregates, bituminous material, and if required, hydrated lime, mineral filler, or other approved additive.

Ensure the constituents proportional to produce mixtures meeting the requirements in Section 828. The general composition limits prescribed are extreme ranges within which the job mix formula must be established. Base mixtures on a design analysis that meets the requirements of Section 828.

Ensure the field performance of the in-place mixtures meet the requirements of Subsection 828.2B for Permeability, Moisture Susceptibility, Rutting Susceptibility and Fatigue. In-place mix may be evaluated for compliance with Subsection 828.2.B at the discretion of the State Bituminous Construction Engineer under the following conditions:

- Deviates greater than 10 percent on gradation for mixture control sieves from the approved Job Mix Formula based on Acceptance or Independent Samples.
- Deviates greater than 0.7 percent in asphalt cement content from the approved Job Mix Formula based on Acceptance or Independent Samples.
- The calculated mean pavement air voids result in an adjusted pay factor less than 0.80 or any single sub lot result in mean pavement air voids exceeding 10.5 percent.
- Mix produced not using an approved mix design and/or job mix formula.

Remove and replace any material determined to not meet the requirements established in Section 828.2.B at the Contractor's expense.

If control test results show the characteristic tested does not conform to the job mix formula control tolerances given in Section 828, take immediate action to ensure that the quality control methods are effective.

Control the materials to ensure extreme variations do not occur. Maintain the gradation within the composition limits in Section 828.

B. Prepare Bituminous Material

Uniformly heat the bituminous material to the temperature specified in the job mix formula with a tolerance of ± 20 °F (± 11 °C).

C. Prepare the Aggregate

Prepare the aggregate as follows:

1. Heat the aggregate for the mixture, and ensure a mix temperature within the limits of the job mix formula.
2. Do not contaminate the aggregate with fuel during heating.
3. Reduce the absorbed moisture in the aggregate until the asphalt does not separate from the aggregate in the prepared mixture. If this problem occurs, the Engineer will establish a maximum limit for moisture content in the aggregates. When this limit is established, maintain the moisture content below this limit.

D. Prepare the Mixture

Proportion the mixture ingredients as necessary to meet the required job mix formula. Mix until a homogenous mixture is produced.

1. Add Mineral Filler

When mineral filler is used, introduce it in the proper proportions and as specified in Subsection 400.3.02.B.5, "Mineral Filler Supply System."

2. Add Hydrated Lime

   When hydrated lime is included in the mixture, add it at a rate specified in Section 828 and the job mix formula. Use methods and equipment for adding hydrated lime according to Subsection 400.3.02.B.6, "Hydrated Lime Treatment System."

   Add hydrated lime to the aggregate by using Method A or B as follows:

   Method A—Dry Form—Add hydrated lime in its dry form to the mixture as follows, according to the type of plant:

   a. Batch Type Asphalt Plant: Add hydrated lime to the mixture in the weigh hopper or as approved and directed by the Engineer.
   b. Continuous Plant Using Pugmill Mixer: Feed hydrated lime into the hot aggregate before it is introduced into the mixer to ensure dry mixing is complete before the bituminous material is added.
   c. Continuous Plant Using Drier-Drum Mixer: Add hydrated lime so to ensure the lime will not become entrained into the air stream of the drier and to ensure thorough dry mixing will be complete before the bituminous material is added.

   Method B—Lime/Water Slurry—Add the required quantity of hydrated lime (based on dry weight) in lime/water slurry form to the aggregate. This solution consists of lime and water in concentrations as directed by the Engineer.

   Equip the plant to blend and maintain the hydrated lime in suspension and to mix the hydrated lime with the aggregates uniformly in the proportions specified.

3. Add Stabilizing Fiber

   When stabilizing fiber is included in the mixture, add stabilizing fiber at a rate specified in Section 819 and the Job Mix Formula. Introduce it as specified in Subsection 400.3.02.B.8, "Fiber Supply System."

4. Add Gilsonite Modifier

   When approved by the Office of Materials and required by the Contract, add the Gilsonite modifier to the mixture at a rate to ensure eight percent by weight of the asphalt cement is replaced by Gilsonite. Use either PG 64-22 or PG 67-22 asphalt cement as specified in Subsection 820.2.01. Provide suitable means to calibrate and check the rate of Gilsonite being added. Introduce Gilsonite modifier by either of the following methods.

   a. For batch type plants, incorporate Gilsonite into the pugmill at the beginning of the dry mixing cycle. Increase the dry mix cycle by a minimum of 10 seconds after the Gilsonite is added and prior to introduction of the asphalt cement. For this method, supply Gilsonite in plastic bags to protect the material during shipment and handling and store the modifier in a waterproof environment. The bags shall be capable of being completely melted and uniformly blended into the combined mixture.

      Gilsonite may also be added through a mineral filler supply system as described in Subsection 400.3.02.B.5, "Mineral Filler Supply System." The system shall be capable of injecting the modifier into the weigh hopper near the center of the aggregate batching cycle so the material can be accurately weighed.

   b. For drum drier plants, add Gilsonite through the recycle ring or through an acceptable means which will introduce the Gilsonite prior to the asphalt cement injection point. The modifier shall be proportionately fed into the drum mixer at the required rate by a proportioning device which shall be accurate within ± 10 percent of the amount required. The entry point shall be away from flames and ensure the Gilsonite will not be caught up in the air stream and exhaust system.

5. Materials from Different Sources

   Do not use mixtures prepared from aggregates from different sources intermittently. This will cause the color of the finished pavement to vary.

E. Observe Weather Limitations

Do not mix and place asphaltic concrete if the existing surface is wet or frozen. Do not lay asphaltic concrete OGFC mix or PEM at air temperatures below 60 ºF (16 ºC). When using a MTV, OGFC mix or PEM may be placed at 55 ºF (13 ºC) when approved by the Engineer. For other courses, follow the temperature guidelines in the following table:

Table 4—Lift Thickness Table

Lift Thickness	Minimum Temperature
1 in (25 mm) or less	55 °F (13 °C)
1.1 to 2 in (26 mm to 50 mm)	45 °F (8 °C)
2.1 to 3 in (51 mm to 75 mm)	40 °F (4 °C)
3.1 to 4 in (76 mm to 100 mm)	35 °F (2 °C)
4.1 to 8 in (101 mm to 200 mm)	32 °F (0 °C) and rising. Base Material must not be frozen.

F. Perform Spreading and Finishing

Spread and finish the course as follows:

1. Determine the course's maximum compacted layer thickness by the type mix being used according to Table 5.

Table 5—Maximum Layer Thickness

Mix Type	Minimum Layer Thickness	Maximum Layer Thickness	Maximum Total Thickness
25 mm Superpave	2 1/2 in (64 mm)	4 in (100 mm) *	—
19 mm Superpave	1 3/4 in (44 mm)	3 in (75 mm) *	—
12.5 mm Superpave	1 3/8 in (35 mm)	2 1/2 in (64 mm)**	8 in (200 mm)
9.5 mm Superpave Type 2	1 1/8 in.(28 mm)	1 1/2 in (38 mm)**	4 in (100 mm)
9.5 mm Superpave Type 1	7/8 in (22 mm)	1 1/4 in (32 mm)	4 in (100 mm)
4.75 mm Mix	3/4 in (19 mm)	1 1/8 in (28 mm)	2 in (50 mm)
9.5 mm OGFC	55 lbs/yd² (30 kg/m²)	65 lbs/yd² (36 kg/m²)	—
12.5 mm OGFC	85 lbs/yd² (47 kg/m²)	95 lbs/yd² (53 kg/m²)	—
12.5 mm PEM	110 lbs/yd² (80 kg/m²)	165 lbs/yd² (90 kg/m²)	—
9.5 mm SMA	1 1/8 in (28 mm)	1 1/2 in (38 mm)	4 in (100 mm)
12.5 mm SMA	1 3/8 in (35 mm)	3 in (75 mm)	6 in (150 mm)
19 mm SMA	1 3/4 in (44 mm)	3 in (75 mm)	—
* Allow up to 6 in (150 mm) per lift on trench widening. **Place 9.5 mm Superpave and 12.5 mm Superpave up to 4 in (100 mm) thick for driveway and side road transition.			

2. Unload the mixture into the paver hopper or into a device designed to receive the mixture from delivery vehicles.
3. Except for leveling courses, spread the mixture to the loose depth for the compacted thickness or the spread rate. Use a mechanical spreader true to the line, grade, and cross section specified.
4. For leveling courses, use a motor grader equipped with a spreader box and smooth tires to spread the material or use a mechanical spreader meeting the requirements in Subsection 400.3.02.C, "Equipment at Project Site."
5. Obtain the Engineer's approval for the sequence of paving operations, including paving the adjoining lanes. Minimize tracking tack onto surrounding surfaces.
6. Ensure the outside edges of the pavement being laid are aligned and parallel to the roadway center line.
7. For New Construction or Resurfacing Contracts containing multiple lifts or courses, arrange the width of the individual lifts so the longitudinal joints of each successive lift are offset from the previous lift at least 1 ft (300 mm). This requirement does not apply to the lift immediately over thin lift leveling courses.

Ensure the longitudinal joint(s) in the surface course and the mix immediately underneath asphaltic concrete OGFC or PEM are at the lane line(s).

NOTE: Perform night work with artificial light provided by the Contractor and approved by the Engineer.

8. Where mechanical equipment cannot be used, spread and rake the mixture by hand. Obtain the Engineer's approval of the operation sequence, including compactive methods, in these areas.
9. Keep small hand raking tools clean and free from asphalt build up. Do not use fuel oil or other harmful solvents to clean tools during the work.
10. Do not use mixture with any of these characteristics:
    - Segregated
    - Nonconforming temperature
    - Deficient or excessive asphalt cement content
    - Otherwise unsuitable to place on the roadway in the work
11. Remove and replace mixture placed on the roadway that the Engineer determines has unacceptable blemish levels from segregation, raveling, streaking, pulling and tearing, or other deficient characteristics. Replace with acceptable mixture at the Contractor's expense. Do not continually place mixtures with deficiencies.

    Do not place subsequent course lifts over another lift or course placed on the same day while the temperature of the previously placed mix is 140 °F (60 °C) or greater.
12. Obtain the Engineer's approval of the material compaction equipment. Perform the rolling as follows:
    a. Begin the rolling as close behind the spreader as possible without causing excessive distortion of the asphaltic concrete surface.
    b. Continue rolling until roller marks are no longer visible.
    c. Use pneumatic-tired rollers with breakdown rollers on all courses except asphaltic concrete OGFC, PEM and SMA or other mixes designated by the Engineer.
13. If applicable, taper or "feather" asphaltic concrete from full depth to a depth no greater than 0.5 in (13 mm) along curbs, gutters, raised pavement edges, and areas where drainage characteristics of the road must be retained. The Engineer will determine the location and extent of tapering.

G. Maintain Continuity of Operations

Coordinate plant production, transportation, and paving operations to maintain a continuous operation. If the spreading operations are interrupted, construct a transverse joint if the mixture immediately behind the paver screed cools to less than 250 ºF (120 ºC).

H. Construct the Joints

1. Construct Transverse Joints
    a. Construct transverse joints to facilitate full depth exposure of the course before resuming placement of the affected course.
    b. Properly clean and tack the vertical face of the transverse joint before placing additional material.

    NOTE: Never burn or heat the joint by applying fuel oil or other volatile materials.

    c. Straightedge transverse joints immediately after forming the joint.
    d. Immediately correct any irregularity that exceeds 3/16 in. in 10 ft (5 mm in 3 m).
2. Construct Longitudinal Joints

    Clean and tack the vertical face of the longitudinal joint before placing adjoining material. Construct longitudinal joints so that the joint is smooth, well sealed, and bonded.

3. Construction Joint Detail for OGFC and PEM Mixtures

   In addition to meeting joint requirements described above, construct joints and transition areas for 12.5 mm OGFC and 12.5 mm PEM mixtures as follows:

   a. For projects which do not have milling included as a pay item:

      1) Place OGFC mixture meeting gradation requirements of 9.5 mm OGFC as specified in Section 828 on entrance and exit ramp gore areas and end of project construction joints.

         - Taper mixture from 3/8 in (10 mm) at end of project to full plan depth within maximum distance of spread for one load of mixture
         - Taper mixture placed on gore areas from thickness of the edge of the mainline to 3/8 in (10 mm) at the point of the ramp transverse joint.

      2.) Construct the ramp transverse joint at the point specified in the plans or as directed by the Engineer.

      3.) Mixture placed in the transition and gore areas will be paid for at the contract unit price for 12.5 mm OGFC or 12.5 mm PEM as applicable.

   b. For projects which have milling included as a pay item:

      1) Taper milling for a distance of no less than 50 ft (15 m) to a depth of 2 1/4 in (59 mm) at the point of the transverse joint

      2) Taper thickness, if needed, of the dense-graded surface mix within the 50 ft (15 m) distance to 1 1/2 in (40 mm) at the point of the transverse joint

      3) Taper thickness of the 12.5 mm OGFC or 12.5 mm PEM to 3/4 in (19 mm) to ensure the material ties in at grade level with the existing surface at the point of the transverse joint

I. Protect the Pavement

Protect sections of the newly finished pavement from traffic until the traffic will not mar the surface or alter the surface texture. If directed by the Engineer, use artificial methods to cool the newly finished pavement to open the pavement to traffic more quickly.

J. Modify the Job Mix Formula

If the Engineer determines that undesirable mixture or mat characteristics are being obtained, the job mix formula may require immediate adjustment.

400.3.06 Quality Acceptance

A. Acceptance Plans for Gradation and Asphalt Cement Content

The Contractor will randomly sample and test mixtures for acceptance on a lot basis. The Department will monitor the Contractor testing program and perform comparison and quality assurance testing. The Contractor's Quality Control Technicians shall participate in the Department's Independent Assurance Systems Basis Program.

1. Determine Lot Amount

   A lot consists of the tons (megagrams) of asphaltic concrete produced and placed each production day. If this production is less than 500 tons (500 Mg), or its square yard (meter) equivalent, production may be incorporated into the next working day. The Engineer may terminate a lot when a pay adjustment is imminent if a plant or materials adjustment resulting in a probable correction has been made. Terminate all open lots at the end of the month, except for materials produced and placed during the adjustment period. The lot will be terminated as described in Subsection 400.5.01,"Adjustments".

   If the final day's production does not constitute a lot, the production may be included in the lot for the previous day's run; or, the Engineer may treat the production as a separate lot with a corresponding lower number of tests.

2. Determine Lot Acceptance

   Determine lot acceptance as found in Subsection 400.5.01, "Adjustments."

   The Department will perform the following task:

Determine the pay factor by using the mean of the deviations from the job mix formula of the tests in each lot and apply it to Table 9—Mixture Acceptance Schedule for Surface Mixes or Table 10—Mixture Acceptance Schedule for Subsurface Mixes, whichever is appropriate. This mean will be determined by averaging the actual numeric value of the individual deviations from the job mix formula, disregarding whether the deviations are positive or negative amounts. Do not calculate lot acceptance using test results for materials not used in the Work. Determine the pay factor for each lot by multiplying the contract unit price by the appropriate pay factor from the Mixture Acceptance Schedule - Table 9 or Table 10. When two or more pay factors for a specific lot are less than 1.0, determine the adjusted payment by multiplying the contract unit price by the lowest pay factor.

If the mean of the deviations from the job mix formula of the lot acceptance tests for a control sieve or for asphalt cement content exceeds the tolerances established in the appropriate Mixture Acceptance Schedule, and if the Engineer determines that the material need not be removed and replaced, the lot may be accepted at an adjusted unit price as determined by the Engineer. If the Engineer determines that the material is not acceptable to leave in place, the materials shall be removed and replaced at the Contractor's expense.

3. Provide Quality Control Program

Provide a Quality Control Program as established in SOP 27 which includes:

- Assignment of quality control responsibilities to specifically named individuals who have been certified by the Office of Materials
- Provisions for prompt implementation of control and corrective measures
- Provisions for communication with Project Manager, Bituminous Technical Services Engineer, and Testing Management Operations Supervisor at all times
- Provisions for reporting all test results daily through the Office of Materials computerized Field Data Collection System; other checks, calibrations and records will be reported on a form developed by the Contractor and will be included as part of the project records
- Notification in writing of any change in quality control personnel

a. Certification Requirements:

- Use laboratory and testing equipment certified by the Department. (Laboratories which participate in and maintain AASHTO accreditation for testing asphaltic concrete mixtures will be acceptable in lieu of Departmental certification.)
- Provide certified quality control personnel to perform the sampling and testing. A Quality Control Technician (QCT) may be certified at three levels:
  1) Temporary Certification – must be a technician trainee who shall be given direct oversight by a certified Level 1 or Level 2 QCT while performing acceptance testing duties during the first 5 days of training. The trainee must complete qualification requirements within 30 Georgia Department of Transportation funded production days after being granted temporary certification. A trainee who does not become qualified within 30 Georgia Department of Transportation funded production days will not be re-eligible for temporary certification. A certified Level 1 or Level 2 QCT shall be at the plant at all times during production and shipment of mixture to monitor work of the temporarily certified technician.
  2) Level 1 – must demonstrate they are competent in performing the process control and acceptance tests and procedures related to hot mix asphalt production and successfully pass a written exam.
  3) Level 2 – must meet Level 1 requirements and must be capable of and responsible for making process control adjustments, and successfully pass a written exam.
     - Technician certification is valid for 3 years from the date on the technician's certificate unless revoked or suspended. Eligible technicians may become certified through special training and testing approved by the Office of Materials. Technicians who lose their certification due to falsification of test data will not be eligible for recertification in the future unless approved by the State Materials Engineer.

b. Quality Control Management

1) Designate at least one Level 2 QCT as manager of the quality control operation. The Quality Control Manager shall meet the following requirements:
   - Be accountable for actions of other QCT personnel

- Ensure all applicable sampling requirements and frequencies, test procedures, and Standard Operating Procedures are adhered to
- Ensure all reports, charts, and other documentation is completed as required

2) Provide QCT personnel at the plant as follows:
   - If daily production for all mix types is to be greater than 250 tons (megagrams), have a QCT person at the plant at all times during production and shipment of mixture until all required acceptance tests have been completed
   - If daily production for all mix types will not be greater than 250 tons (megagrams) a QCT may be responsible for conducting tests at up to two plants, subject to random number sample selection
   - Have available at the plant or within immediate contact by phone or radio a Level 2 QCT responsible for making prompt process control adjustments as necessary to correct the mix

3) Sampling, Testing, and Inspection Requirements.

   Provide all sample containers, extractants, forms, diaries, and other supplies subject to approval of the Engineer.

   Perform daily sampling, testing, and inspection of mixture production that meets the following requirements:

   (a) Randomly sample mixtures according to GSP 15, and GDT 73 (Method C) and test on a lot basis. In the event less than the specified number of samples are taken, obtain representative 6 in (150 mm) cores from the roadway at a location where the load not sampled was placed. Take enough cores to ensure minimum sample size requirements are met for each sample needed.

   (b) Maintain a printed copy of the computer generated random sampling data as a part of the project records.

   (c) Perform sampling, testing, and inspection duties of GSP 21.

   (d) Perform extraction or ignition test (GDT 83 or GDT 125) and extraction analysis (GDT 38). If the ignition oven is used, a printout of sample data including weights shall become a part of the project records. For asphalt cement content only, digital printouts of liquid asphalt cement weights may be substituted in lieu of an extraction test for plants with digital recorders. Calculate the asphalt content from the ticket representing the mixture tested for gradation.

   (e) Save extracted aggregate, opposite quarters, and remaining material (for possible referee testing) of each sample as follows:
      - Store in properly labeled, suitable containers
      - Secure in a protected environment
      - Store for three working days. If not obtained by the Department, within three days they may be discarded in accordance with GSP 21.

   (f) Add the following information on load tickets from which a sample or temperature check is taken:
      - Mixture temperature
      - Signature of the QCT person performing the testing

   (g) Calibrate the lime system when hydrated lime is included in the mixture:
      - Perform a minimum of twice weekly during production
      - Post results at the plant for review
      - Provide records of materials invoices upon request (including asphalt cement, aggregate, hydrated lime, etc.)

   (h) Take action if acceptance test results are outside Mixture Control Tolerances of Section 828.
      - One sample out of tolerance

   (1) Contact Level 2 - QCT to determine if a plant adjustment is needed

   (2) Immediately run a process control sample. Make immediate plant adjustments if this sample is also out of tolerance

NOTE: Determine mixture temperature at least once per hour of production for OGFC and PEM mixes.

(3) Test additional process control samples as needed to ensure corrective action taken appropriately controls the mixture

- Two consecutive acceptance samples of the same mix type out of tolerance regardless of Lot or mix design level, or three consecutive acceptance samples out of tolerance regardless of mix type

(1) Stop plant production immediately

(2) Reject any mixture in storage:

- Deviating more than 10 percent in gradation from the job mix formula based on the acceptance sample
- Deviating more than 0.7 percent in asphalt content from the job mix formula based on the acceptance sample

(3) Make a plant correction to any mix type out of tolerance prior to resuming production

- Do not send any mixture to the project before test results of a process control sample meets Mixture Control Tolerances
- Reject any mixture produced at initial restarting that does not meet Mixture Control Tolerances

4) Comparison Testing and Quality Assurance Program

Periodic comparison testing by the Department will be required of each QCT to monitor consistency of equipment and test procedures. The Department will take independent samples to monitor the Contractor's quality control program.

a) Comparison Sampling and Testing

Retain samples for comparison testing and referee testing if needed as described in Subsection 400.3.06.A.3.b.3. Discard these samples only if the Contractor's acceptance test results meet a 1.00 pay factor and the Department does not procure the samples within three working days.

The Department will test comparison samples on a random basis. Results will be compared to the respective contractor acceptance tests and the maximum difference shall be as follows:

Table 6—Allowable Percent Difference Between Department and Contractor Acceptance Tests

SIEVE SIZE	SURFACE	SUB-SURFACE
1/2 in. (12.5 mm)		4.0%
3/8 in. (9.5 mm)	3.5%	4.0%
No. 4 (4.75 mm)	3.5%	3.5%
No. 8 (2.36 mm)	2.5%	3.0%
No. 200 (75 μm)	2.0%	2.0%
A.C.	0.4%	0.5%

NOTE: Pavement courses to be overlaid with OGFC or PEM mixes are considered surface mixes.

(1) If test comparisons are within these tolerances:

- Continue production
- Use the Contractor's tests for acceptance of the lot

(2) If test comparisons are not within these tolerances:

- Another Departmental technician will test the corresponding referee sample
- Results of the referee sample will be compared to the respective contractor and Departmental tests using the tolerance for comparison samples given above.
  - a. If referee test results are within the above tolerances when compared to the Contractor acceptance test, use the Contractor's test for acceptance of the effected lot.
  - b. If referee test results are not within the above tolerances when compared to the Contractor acceptance test, the Department will review the Contractor's quality control methods and determine if a thorough investigation is needed.

b) Independent Verification Sampling and Testing

(1) Randomly take a minimum of two independent samples from the lesser of five days or five lots of production regardless of mix type or number of projects.

(2) Compare test deviation from job mix formula to Mixture Control Tolerances in Section 828. If results are outside these tolerances, another sample from the respective mix may be taken.

NOTE: For leveling courses less than 110 lb/yd² (60 kg/m²) having quality assurance test results outside the Mixture Control Tolerances of Section 828, use the Department's test results only and applicable pay factors will apply.

If test results of the additional sample are not within Mixture Control Tolerances, the Department will take the following action:

- Take random samples from throughout the subject lot(s) as established in Subsection 400.3.06.A.3.b.3 and use these test results for acceptance and in calculations for the monthly plant rating. Applicable pay factors will apply and the contractor QCT test results will not be included in pay factor calculations nor in the monthly plant rating.
- Determine if the Contractor's quality control program is satisfactory and require prompt corrective action by the Contractor if specification requirements are not being met.
- Determine if the QCT has not followed Departmental procedures or has provided erroneous information.
- Take samples of any in-place mixture represented by unacceptable QCT tests and use the additional sample results for acceptance and in calculations for the monthly plant rating and apply applicable pay factors. The Contractor QCT tests will not be included in the pay factor calculations nor in the monthly plant rating.

B. Compaction

Determine the mixture compaction using either GDT 39 , GDT 59 or AASHTO T 331. The method of GDT 39 for "Uncoated Specimens, Dense Graded Mixtures Only" shall not apply when the water absorption of a sample exceeds 2.0 percent, as measured according to AASHTO T 166. In this case, either AASHTO T 331 or the paraffin method of GDT 39 shall apply. The compaction is accepted in lots defined in Subsection 400.3.06. A "Acceptance Plans for Gradation and Asphalt Cement Content" and is within the same lot boundaries as the mixture acceptance.

1. Calculate Pavement Mean Air Voids

   The Department will calculate the pavement air voids placed within each lot as follows:

   a. One test per sub-lot.
      - Lots ≥ 500 ton (500 Mg) of mix shall be divided into 5 sub-lots of equal distance
      - Lots < 500 tons (500 Mg) of mix shall be divided into a sub-lot or equal sub-lots consisting up to 100 tons (100 Mg) mix each. There may be less than 5 sub-lots.

   b. Average the results of all tests run on randomly selected sites in that lot.

c. Select the random sites using GDT 73.

Density tests are not required for asphaltic concrete placed at 90 lbs/yd^2 (50 kg/m^2) or less, 4.75 mm mix, and asphaltic concrete OGFC, PEM and mixes placed as variable depth or width leveling. Compact these courses to the Engineer's satisfaction. Density tests will not be performed on turn-outs and driveways.

The targeted maximum Pavement Mean Air Void content for all Superpave and Stone Matrix Asphalt mixtures is 5.0 percent. Ensure that the maximum Pavement Mean Air Voids for all Superpave and Stone Matrix Asphalt mixtures does not exceed 7.0 percent. The maximum Pavement Mean Air Voids for 2 foot shoulder widening is 9.0 percent. The adjustment period for density shall be four lots or four production days, whichever is less, in order for the contractor to ensure maximum compactive effort has been achieved which will yield no more than the specified maximum allowed Mean Air Voids. If the contractor needs to adjust the mixture to improve density results, a change in the job mix formula may be requested for approval during the adjustment period so long as the following values are not exceeded:

- Coarse pay sieve ± 4%
- No. 8 (2.36 mm) sieve ± 2%
- No. 200 (75 μm) sieve ± 1%
- Asphalt Content ± 0.2%
- All value changes must still be within specification limits

If the Office of Materials is satisfied that the contractor has exerted the maximum compactive effort and is not able to maintain Pavement Mean Air Voids at no more than 7.0%, the Engineer may establish a maximum target for Pavement Mean Air Voids.

Mixture placed during the adjustment period for density shall meet the requirements for a 0.90 pay factor in Table 12 of Subsection 400.5.01.C, "Calculate Mean Pavement Air Voids." Mixture not meetng these density requirements shall be paid for using the applicable pay factor.

If the mean air voids of the pavement placed within a lot exceeds 100% of the maximum target air voids, if established and the Engineer determines that the material need not be removed and replaced, the lot may be accepted at an adjusted unit price as determined by the Engineer.

2. Obtain Uniform Compaction

For a lot to receive a pay factor of 1.00 for compaction acceptance, the air void range cannot exceed 4 percent for new construction or 5 percent for resurfacing projects. The range is the difference between the highest and lowest acceptance test results within the affected lot. If the air void range exceeds these tolerances, apply a Pay Factor of 95%.

The 5% reduced pay factor for the compaction range does not apply in these instances:

- The mixture is placed during the adjustment period as defined in Subsection 400.5.01.A, "Materials Produced and Placed During the Adjustment Period."
- All air void results within a given lot are less than 7.0%.
- A lot containing two sublot or less.
- On two foot trench widening.

C. Surface Tolerance

In this Specification, pavement courses to be overlaid with an Open-Graded Friction Course or PEM are considered surface courses. All Open-Graded Friction Courses or PEM are to be evaluated after the roadway has been opened to traffic for a minimum of 5 days and a maximum of 15 days. Asphalt paving is subject to straightedge and visual inspection and irregularity correction as shown below:

1. Visual and Straightedge Inspection

Paving is subject to visual and straightedge inspection during and after construction operations until Final Acceptance. Locate surface irregularities as follows:

a. Keep a 10 ft (3 m) straightedge near the paving operation to measure surface irregularities on courses. Provide the straightedge and the labor for its use.

b. Inspect the base, intermediate, and surface course surfaces with the straightedge to detect irregularities.

c. Correct irregularities that exceed 3/16 in. in 10 ft (5 mm in 3 m) for base and intermediate courses, and 1/8 in. in 10 ft (3 mm in 3 m) for surface courses.

Mixture or operating techniques will be stopped if irregularities such as rippling, tearing, or pulling occur and the Engineer suspects a continuing equipment problem. Stop the paving operation and correct the problem. Correct surface course evaluations on individual Laser Road Profiler test sections, normally 1mile (1 km) long.

2. Target Surface Smoothness

The Department will use the Laser Road Profiler method to conduct acceptance testing for surface course tolerance according to GDT 126. This testing will be performed only on:

- Surface courses on Projects with mainline traveled way measuring a minimum distance of 1 mile (1600 m)
- Ramps more than 0.5 mile (800 m) long

Combine partial sections measuring less than 0.5 mile (800 m) with the previous full mile for acceptance.

Achieve the smoothest possible ride during construction. Do not exceed the target Laser Road Profiler smoothness index as shown below:

Table 7— Pavement Smoothness Target Requirements

Construction Description	Smoothness Index
All Asphaltic Concrete OGFC and PEM on interstate resurfacing and new construction. Asphaltic Concrete OGFC and PEM placed on state route new construction.	750
Asphaltic Concrete SMA and other resurfacing on interstates. Asphaltic Concrete OGFC and PEM placed on state route resurfacing. All new construction on state routes with exception of OGFC and PEM as stated above.	825
All other resurfacing on state routes (excluding LARP, PR, airports, etc.)	900
All Urban new construction and resurfacing on state routes within curb and gutter sections located in posted 35 miles per hour (MPH) or less speed zones.	1175

If the target values are not achieved, immediately adjust the operations to meet the target values. Placement operations may be suspended until a remedial plan to comply with target smoothness requirements is submitted and approved by the Engineer if adjustments do not satisfy target smoothness values.

Table 8— Pavement Smoothness Corrective Work Requirement

Construction Description	Smoothness Index
All Asphaltic Concrete OGFC and PEM placed on interstate resurfacing and new construction. Asphaltic Concrete OGFC and PEM placed on state route new construction.	825
Asphaltic Concrete SMA and other resurfacing on interstates. Asphaltic Concrete OGFC and PEM placed on state route resurfacing. All new construction on state routes with exception of OGFC and PEM as stated above.	900
All other resurfacing on state routes (excluding LARP, PR, airports, etc.)	1025
All Urban new construction and resurfacing on state routes within curb and gutter sections located in posted 35 miles per hour (MPH) or less speed zones.	1250

If surface tolerance deficiencies need correction, obtain the Engineer's approval of the methods and type mix used.

3. Bridge Approach Ride Quality

   The following are subject to a ride quality test by the Department for 100 ft. (30 m) of roadway approaching each end of a bridge using the Lightweight Profiler:

   - A state road with 4 lanes or more
   - A 2-lane state road with a current traffic count of 2,000 vpd or more
   - Locations designated on the Plans

   All other bridge approaches not meeting the above criteria shall meet the 1/8 in. in 10 ft (3 mm in 3 m) straightedge requirement. When the distance between the ends of two bridges is less than 200 ft (60 m), the bridge approaches will meet the straightedge requirements.

   Test ride quality as follows:

   a. The Department will determine a profile index value according to test method GDT 134.
   b. The Department will average the profile index value from the right and left wheelpath for each 100 ft (30 m) section for each lane
      - Resurfacing Projects – Keep the profile index value under 35 in/mile (555 mm/km), correct individual bumps or depression exceeding 0.2 in. (5 mm) from the blanking band on the profilograph trace.
      - All Other Projects – Keep the profile index value under 30 in/mile (475 mm/km), correct individual bumps or depressions exceeding 0.2 in. (5 mm) from blanking band on the profilograph trace.
   c. Meet the profile index value for the 100 ft (30 m) section of roadway up to the joint with the approach slab.
   d. Schedule the ride quality testing 5 days before needed by contacting the Office of Materials. Clean and clear obstructions from the test area.
   e. Correct the sections that do not meet the ride quality criteria of this Specification. After correction, these sections are subject to retesting with the Lightweight Profiler. The Engineer shall direct the type of correction method, which may include:
      - Milling
      - Grinding
      - Removing and replacing the roadway

   No additional compensation will be made.

   The Department will perform ride quality testing up to two times on the bridge approaches at no cost to the Contractor. Additional profilograph testing will cost the Contractor $500 per test.

4. Surface Smoothness Acceptance

   When recommended by the Office of Materials, a pay reduction may be accepted in lieu of correction for roadways and bridge approaches that fail to achieve specified smoothness indexes.

D. Reevaluation of Lots

When lots are reevaluated as shown in Subsection 106.03, “Samples, Tests, Cited Specifications,” sampling and testing is according to GDT 73. Request for reevaluation shall be made within 5 working days of notification of the lot results. The following procedures apply:

1. Mixture Acceptance

   The Department will take the same number of new tests on cores taken at the locations where the loads sampled were placed and will use only those cores results for acceptance. If the location of the sampled loads cannot be isolated and documented to the approval of the Engineer, the lot will not be re-evaluated and the original test results will be used for acceptance. The Department will use the absolute average deviations from the job mix formula for these tests to determine acceptance based on the appropriate column in the Asphalt Cement Content and Aggregate Gradation of Asphalt Concrete Mixture Acceptance Schedule—Table 9 or 10.

2. Compaction Acceptance

   The Department will reevaluate the lot through additional testing by cutting the same number of cores originally obtained and averaging these results with the results from the original density tests. The Department will use the

average to determine acceptance according to the Compaction Acceptance Schedule in Subsection 400.5.01.C, “Calculate Pavement Mean Air Voids”.

Table 9—Mixture Acceptance Schedule—Surface Mixes

Mixture Characteristics	Pay Factor	Mean of the Deviations from the Job Mix Formula							
		1 Test	2 Tests	3 Tests	4 Tests	5 Tests	6 Tests	7 Tests	8 Tests
Asphalt Cement Content	1.00	0.00 - 0.70	0.00 - 0.54	0.00 - 0.46	0.00 - 0.41	0.00 - 0.38	0.00 - 0.35	0.00 - 0.32	0.00 - 0.30
(Extraction, Ignition)	0.95	0.71 - 0.80	0.55 - 0.61	0.47 - 0.52	0.42 - 0.46	0.39 - 0.43	0.36 - 0.39	0.33 - 0.36	0.31 - 0.34
	0.90	0.81 - 0.90	0.62 - 0.68	0.53 - 0.58	0.47 - 0.51	0.44 - 0.47	0.40 - 0.45	0.37 - 0.40	0.35 - 0.37
	0.80	0.91 - 1.00	0.69 - 0.75	0.59 - 0.64	0.52 - 0.56	0.48 - 0.52	0.44 - 0.47	0.41 - 0.44	0.38 - 0.41
	0.70	1.01 - 1.19	0.76 - 0.82	0.65 - 0.69	0.57 - 0.61	0.53 - 0.56	0.48 - 0.51	0.45 - 0.47	0.42 - 0.44
	0.50	1.20 - 1.40	0.83 - 0.85	0.70 - 0.72	0.62 - 0.64	0.57 - 0.59	0.52 - 0.55	0.48 - 0.51	0.45 - 0.48
3/8 in. (9.5 mm) Sieve	1.00	0.00 – 9.0	0.00 - 6.6	0.00 - 5.6	0.00 - 5.0	0.00 - 4.6	0.00 - 4.2	0.00 - 3.9	0.00 - 3.6
(12.5 mm OGFC, 12.5 mm PEM, 12.5 mm Superpave)	0.98	9.1 - 10.0	6.7 - 7.5	5.7 - 6.3	5.1 - 5.6	4.7 - 5.2	4.3 - 4.7	4.0 - 4.4	3.7 - 4.1
	0.95	10.1 - 11.9	7.6 - 8.4	6.4 - 7.0	5.7 - 6.3	5.3 - 5.8	4.8 - 5.3	4.5 - 5.0	4.2 - 4.6
	0.90	12.0 - 13.0	8.5 - 9.3	7.1 - 7.7	6.4 - 6.9	5.9 - 6.3	5.4 - 5.8	5.1 - 5.4	4.7 - 5.0
	0.85	13.1 - 14.0	9.4 - 10.2	7.8 - 8.6	7.0 - 7.6	6.4 - 6.9	5.9 - 6.3	5.5 - 5.9	5.1 - 5.5
	0.80	14.1 - 14.5	10.3 - 10.5	8.7 - 8.9	7.7 - 8.0	7.0 - 7.5	6.4 - 6.8	6.0 - 6.4	5.6 - 6.0
3/8 in. (9.5 mm) Sieve	1.00	0.0 - 6.8	0.00 - 5.0	0.00 - 4.2	0.00 - 3.8	0.00 - 3.4	0.00 - 3.2	0.00 - 2.9	0.00 - 2.7
(12.5 mm SMA)	0.98	6.9 - 7.5	5.1 - 5.6	4.3 - 4.7	3.9 - 4.2	3.5 - 3.9	3.3 - 3.5	3.0 - 3.3	2.8 - 3.1
	0.95	7.6 - 8.9	5.7 - 6.3	4.8 - 5.2	4.3 - 4.7	4.0 - 4.4	3.6 - 4.0	3.4 - 3.8	3.2 - 3.4
	0.90	9.0 - 9.8	6.4 - 7.0	5.3 - 5.8	4.8 - 5.2	4.5 - 4.8	4.1 - 4.4	3.9 - 4.1	3.5 - 3.8
	0.85	9.9 - 10.5	7.1 - 7.6	5.9 - 6.4	5.3 - 5.7	4.9 - 5.2	4.5 - 4.7	4.2 - 4.4	3.9 - 4.1
	0.80	10.6 - 10.9	7.7 - 7.9	6.5 - 6.7	5.8 - 6.0	5.3 - 5.6	4.8 - 5.1	4.5 - 4.8	4.2 - 4.5
No. 4 (4.75 mm) Sieve	1.00	0.00 - 9.0	0.00 - 6.7	0.00 - 5.7	0.00 - 5.2	0.00 - 4.8	0.00 - 4.4	0.00 - 4.1	0.00 - 3.8
(9.5 mm OGFC, 9.5 mm Superpave)	0.98	9.1 - 10.0	6.8 - 7.6	5.8 - 6.3	5.3 - 5.8	4.9 - 5.4	4.5 - 4.9	4.2 - 4.6	3.9 - 4.3
	0.95	10.1 - 11.9	7.7 - 8.5	6.4 - 6.9	5.9 - 6.4	5.5 - 5.9	5.0 - 5.4	4.7 - 5.0	4.4 - 4.7
	0.90	12.0 - 13.0	8.6 - 9.4	7.0 - 7.5	6.5 - 7.0	6.0 - 6.5	5.5 - 5.9	5.1 - 5.5	4.8 - 5.1
	0.85	13.1 - 14.0	9.5 - 10.2	7.6 - 8.0	7.1 - 7.6	6.6 - 7.0	6.0 - 6.4	5.6 - 5.9	5.2 - 5.5

Mixture Characteristics	Pay Factor	Mean of the Deviations from the Job Mix Formula							
		1 Test	2 Tests	3 Tests	4 Tests	5 Tests	6 Tests	7 Tests	8 Tests
	0.80	14.1 - 14.5	10.3 - 10.5	8.1 - 8.3	7.7 - 8.0	7.1 - 7.5	6.5 - 6.9	6.0 - 6.4	5.6 - 5.9
No. 4 (4.75 mm) Sieve	1.00	0.00 - 6.8	0.00 - 5.0	0.00 - 4.3	0.00 - 3.9	0.00 - 3.6	0.00 - 3.3	0.00 - 3.1	0.00 - 2.8
(9.5 mm SMA)	0.98	6.9 - 7.5	5.1 - 5.7	4.4 - 4.7	4.0 - 4.4	3.7 - 4.0	3.4 - 3.7	3.2 - 3.4	2.9 - 3.2
	0.95	7.6 - 8.9	5.8 - 6.4	4.8 - 5.2	4.5 - 4.8	4.1 - 4.4	3.8 - 4.0	3.5 - 3.8	3.3 - 3.5
	0.90	9.0 - 9.8	6.5 - 7.0	5.3 - 5.6	4.9 - 5.2	4.5 - 4.9	4.1 - 4.4	3.9 - 4.1	3.6 - 3.8
	0.85	9.9 - 10.5	7.1 - 7.7	5.7 - 6.0	5.3 - 5.7	5.0 - 5.2	4.3 - 4.8	4.2 - 4.4	3.9 - 4.1
	0.80	10.6 - 10.9	7.8 - 7.9	6.1 - 6.2	5.8 - 6.0	5.3 - 5.6	4.9 - 5.2	4.5 - 4.8	4.2 - 4.4
No. 8 (2.36 mm) Sieve	1.00	0.00 - 7.0	0.00 - 5.6	0.00 - 4.8	0.00 - 4.3	0.00 - 4.0	0.00 - 3.6	0.00 - 3.4	0.00 - 3.2
(OGFC, PEM, Superpave and 4.75 mm mixes)	0.98	7.1 - 8.0	5.7 - 6.3	4.9 - 5.4	4.4 - 4.8	4.1 - 4.5	3.7 - 4.1	3.5 - 3.8	3.3 - 3.6
	0.95	8.1 - 9.0	6.4 - 7.0	5.5 - 6.0	4.9 - 5.3	4.6 - 4.9	4.2 - 4.5	3.9 - 4.2	3.7 - 3.9
	0.90	9.1 - 10.9	7.1 - 7.7	6.1 - 6.6	5.4 - 5.8	5.0 - 5.4	4.6 - 4.9	4.3 - 4.6	4.0 - 4.3
	0.85	11.0 - 12.0	7.8 - 8.5	6.7 - 7.2	5.9 - 6.4	5.5 - 5.8	5.0 - 5.3	4.7 - 5.0	4.4 - 4.6
	0.75	12.1 - 12.5	8.6 - 8.8	7.3 - 7.5	6.5 - 6.8	5.9 - 6.3	5.4 - 5.7	5.1 - 5.3	4.7 - 4.9
No. 8 (2.36 mm) Sieve	1.00	0.00 - 5.3	0.00 - 4.2	0.00 - 3.6	0.00 - 3.2	0.00 - 3.0	0.00 - 2.7	0.00 - 2.6	0.00 - 2.4
(12.5 mm SMA, 9.5 mm SMA)	0.98	5.4 - 6.0	4.3 - 4.7	3.7 - 4.0	3.3 - 3.6	3.1 - 3.4	2.8 - 3.1	2.7 - 2.9	2.5 - 2.7
	0.95	6.1 - 6.8	4.8 - 5.3	4.1 - 4.5	3.7 - 4.0	3.5 - 3.7	3.2 - 3.4	3.0 - 3.2	2.8 - 2.9
	0.90	6.9 - 8.2	5.4 - 5.8	5.6 - 5.0	4.1 - 4.5	3.8 - 4.0	3.5 - 3.7	3.3 - 3.5	3.0 - 3.2
	0.85	8.3 - 9.0	5.9 - 6.4	5.1 - 5.4	4.6 - 4.8	4.1 - 4.4	3.8 - 4.0	3.6 - 3.8	3.3 - 3.4
	0.75	9.1 - 9.4	6.5 - 6.6	5.5 - 5.0	4.9 - 5.1	4.5 - 4.7	4.1 - 4.3	3.9 - 4.0	3.5 - 3.7
No. 8 (2.36 mm) Sieve for OGFC and PEM mixes: When the mean of the deviations from the Job Mix Formula for a particular lot exceeds the tolerance for a 1.00 pay factor in the appropriate column, the lot will be paid for at 0.50 of the Contract Price.									

Table 10—Mixture Acceptance Schedule—Subsurface Mixes

Mixture Characteristics	Pay Factor	Mean of the Deviations from the Job Mix Formula							
		1 Test	2 Tests	3 Tests	4 Tests	5 Tests	6 Tests	7 Tests	8 Tests
Asphalt Cement Content (Extraction, Ignition)	1.00	0.00 - 0.80	0.00 - 0.61	0.00 - 0.52	0.00 - 0.46	0.00 - 0.43	0.00 - 0.39	0.00 - 0.36	0.00 - 0.34
	0.95	0.81 - 0.90	0.62 - 0.68	0.53 - 0.58	0.47 - 0.51	0.44 - 0.47	0.40 - 0.43	0.37 - 0.40	0.35 - 0.37
	0.90	0.91 - 1.00	0.69 - 0.75	0.59 - 0.64	0.52 - 0.56	0.48 - 0.52	0.44 - 0.47	0.41 - 0.44	0.38 - 0.41
	0.80	1.01 - 1.19	0.76 - 0.82	0.65 - 0.69	0.57 - 0.61	0.53 - 0.56	0.48 - 0.51	0.45 - 0.47	0.42 - 0.44
	0.70	1.20 - 1.40	0.83 - 0.85	0.70 - 0.72	0.62 - 0.64	0.57 - 0.59	0.52 - 0.55	0.48 - 0.51	0.45 - 0.48
	0.50	1.41 - 1.60	0.86 - 0.88	0.73 - 0.75	0.65 - 0.67	0.60 - 0.63	0.56 - 0.60	0.52 - 0.56	0.49 - 0.52
1/2 in. (12.5 mm) Sieve (25 mm Superpave)	1.00	0.00 - 12.9	0.00 - 8.1	0.00 - 6.9	0.00 - 6.1	0.00 - 5.5	0.00 - 5.0	0.00 - 4.7	0.00 - 4.4
	0.98	13.0 - 14.0	8.2 - 9.1	7.0 - 7.7	6.2 - 6.8	5.6 - 6.1	5.1 - 5.6	4.8 - 5.2	4.5 - 4.9
	0.95	14.1 - 15.0	9.2 - 10.1	7.8 - 8.5	6.9 - 7.5	6.2 - 6.7	5.7 - 6.1	5.3 - 5.7	5.0 - 5.4
	0.90	15.1 - 16.0	10.2 - 11.1	8.6 - 9.3	7.6 - 8.2	6.8 - 7.4	6.2 - 6.7	5.8 - 6.3	5.5 - 5.9
	0.85	16.1 - 17.0	11.2 - 11.5	9.4 - 9.6	8.3 - 8.6	7.5 - 7.8	6.8 - 7.0	6.4 - 6.5	6.0 - 6.1
	0.80	17.1 - 18.0	11.6 - 11.9	9.7 - 9.9	8.7 - 9.0	7.9 - 8.1	7.1 - 7.3	6.6 - 6.8	6.2 - 6.4
1/2 in. (12.5 mm) Sieve (19 mm SMA)	1.00	0.00 - 9.7	0.00 - 6.0	0.00 - 5.2	0.00 - 4.6	0.00 - 4.1	0.00 - 3.8	0.00 - 3.5	0.00 - 3.3
	0.98	9.8 - 10.5	6.2 - 6.8	5.3 - 5.8	4.7 - 5.1	4.2 - 4.6	3.9 - 4.2	3.6 - 3.9	3.4 - 3.7
	0.95	10.6 - 11.2	6.9 - 7.8	5.9 - 6.4	5.2 - 5.6	4.7 - 5.0	4.3 - 4.6	4.0 - 4.3	3.8 - 4.0
	0.90	11.3 - 12.0	7.9 - 8.3	6.5 - 7.0	5.7 - 6.1	5.1 - 5.6	4.7 - 5.0	4.4 - 4.7	4.1 - 4.4
	0.85	12.1 - 12.8	8.4 - 8.6	7.1 - 7.2	6.2 - 6.5	5.7 - 5.9	5.1 - 5.3	4.8 - 4.9	4.5 - 5.6
	0.80	12.9 - 13.5	8.7 - 8.9	7.3 - 7.4	6.6 - 6.8	6.0 - 6.1	5.4 - 5.5	5.0 - 5.1	4.7 - 4.8
3/8 in. (9.5 mm) Sieve (19 mm Superpave, 12.5 mm Superpave)	1.00	0.00 - 10.0	0.00 - 7.5	0.00 - 6.3	0.00 - 5.6	0.00 - 5.2	0.00 - 4.7	0.00 - 4.4	0.00 - 4.1
	0.98	10.1 - 11.9	7.6 - 8.4	6.4 - 7.0	5.7 - 6.3	5.3 - 5.8	4.8 - 5.3	4.5 - 5.0	4.2 - 4.6
	0.95	12.0 - 13.0	8.5 - 9.3	7.1 - 7.7	6.4 - 6.9	5.9 - 6.3	5.4 - 5.8	5.1 - 5.4	4.7 - 5.0
	0.90	13.1 - 14.0	9.4 - 10.2	7.8 - 8.6	7.0 - 7.6	6.4 - 6.9	5.9 - 6.3	5.5 - 5.9	5.1 - 5.5
	0.85	14.1 - 14.5	10.3 - 10.5	8.7 - 8.9	7.7 - 8.0	7.0 - 7.5	6.4 - 6.8	6.0 - 6.4	5.6 - 6.0

Mixture Characteristics	Pay Factor	Mean of the Deviations from the Job Mix Formula							
		1 Test	2 Tests	3 Tests	4 Tests	5 Tests	6 Tests	7 Tests	8 Tests
	0.80	14.6 - 15.0	10.6 - 10.8	9.0 - 9.2	8.1 - 8.4	7.6 - 7.8	6.9 - 7.3	6.5 - 6.8	6.1 - 6.5
No. 4 (4.75 mm) Sieve	1.00	0.00 - 10.0	0.00 - 7.6	0.00 - 6.3	0.00 - 5.8	0.00 - 5.4	0.00 - 4.9	0.00 - 4.6	0.00 - 4.3
(9.5 mm Superpave)	0.98	10.1 - 11.9	7.7 - 8.5	6.4 - 6.9	5.9 - 6.4	5.5 - 5.9	5.0 - 5.4	4.7 - 5.0	4.4 - 4.7
	0.95	12.0 - 13.0	8.6 - 9.4	7.0 - 7.5	6.5 - 7.0	6.0 - 6.5	5.5 - 5.9	5.1 - 5.5	4.8 - 5.1
	0.90	13.1 - 14.0	9.5 - 10.2	7.6 - 8.0	7.1 - 7.6	6.6 - 7.0	6.0 - 6.4	5.6 - 5.9	5.2 - 5.5
	0.85	14.1 - 14.5	10.3 - 10.5	8.1 - 8.3	7.7 - 8.0	7.1 - 7.5	6.5 - 6.9	6.0 - 6.4	5.6 - 5.9
	0.80	14.6 - 15.0	10.6 - 10.8	8.4 - 8.6	8.1 - 8.4	7.6 - 8.0	7.0 - 7.4	6.5 - 6.8	6.0 - 6.3
No. 8 (2.36 mm) Sieve	1.00	0.00 - 8.0	0.00 - 6.3	0.00 - 5.4	0.00 - 4.8	0.00 - 4.5	0.00 - 4.1	0.00 - 3.8	0.00 - 3.6
(All mixes except SMA)	0.98	8.1 - 9.0	6.4 - 7.0	5.5 - 6.0	4.9 - 5.3	4.6 - 4.9	4.2 - 4.5	3.9 - 4.2	3.7 - 3.9
	0.95	9.1 - 10.0	7.1 - 7.7	6.1 - 6.6	5.4 - 5.8	5.0 - 5.4	4.6 - 4.9	4.3 - 4.6	4.0 - 4.3
	0.90	10.1 - 11.9	7.8 - 8.5	6.7 - 7.2	5.9 - 6.4	5.5 - 5.8	5.0 - 5.3	4.7 - 5.0	4.4 - 4.6
	0.85	12.0 - 13.0	8.6 - 8.8	7.3 - 7.5	6.5 - 6.8	5.9 - 6.3	5.4 - 5.7	5.1 - 5.3	4.7 - 4.9
	0.75	13.1 - 14.0	8.9 - 9.1	7.6 - 7.8	6.9 - 7.2	6.4 - 6.6	5.8 - 6.1	5.4 - 5.7	5.0 - 5.3
No. 8 (2.36 mm) Sieve	1.00	0.00 - 6.0	0.00 - 4.7	0.00 - 4.1	0.00 - 3.6	0.00 - 3.4	0.00 - 3.1	0.00 - 2.9	0.00 - 2.4
(19 mm SMA)	0.98	6.1 - 6.8	4.8 - 5.2	4.2 - 4.5	3.7 - 4.0	3.5 - 3.7	3.2 - 3.4	3.0 - 3.2	2.8 - 2.9
	0.95	6.9 - 7.5	5.3 - 5.8	4.6 - 5.0	4.1 - 4.4	3.8 - 4.0	3.5 - 3.7	3.3 - 3.5	3.0 - 3.2
	0.90	7.6 - 8.9	5.9 - 6.4	5.1 - 5.4	4.5 - 4.8	4.1 - 4.4	3.8 - 4.0	3.6 - 3.8	3.3 - 3.5
	0.85	9.0 - 9.8	6.5 - 6.6	5.5 - 5.6	4.9 - 5.1	4.5 - 4.7	4.1 - 4.3	3.9 - 4.0	3.6 - 3.7
	0.75	9.9 - 10.5	6.7 - 6.8	5.7 - 5.9	5.2 - 5.4	4.8 - 5.0	4.4 - 4.6	4.1 - 4.3	3.8 - 4..0

E. Segregated Mixture

Prevent mixture placement yielding a segregated mat by following production, storage, loading, placing, and handling procedures. Ensure needed plant modifications and provide necessary auxiliary equipment. (See Subsection 400.1.01, "Definitions.")

If the mixture is segregated in the finished mat, the Department will take actions based on the degree of segregation. The actions are described below.

1. Unquestionably Unacceptable Segregation

   When the Engineer determines the segregation in the finished mat is unquestionably unacceptable, follow these measures:

   a. Suspend Work and require the Contractor to take positive corrective action. The Department will evaluate the segregated areas to determine the extent of the corrective work to the in-place mat as follows:
      - Perform extraction and gradation analysis by taking 6 in (150 mm) cores from typical, visually unacceptable segregated areas.
      - Determine the corrective work according to Subsection 400.3.06.E.3.

   b. Require the Contractor to submit a written plan of measures and actions to prevent further segregation. Work will not continue until the plan is submitted to and approved by the Department.

   c. When work resumes, place a test section not to exceed 500 tons (500 Mg) of the affected mixture for the Department to evaluate. If a few loads show that corrective actions were not adequate, follow the measures above beginning with step 1.a. above. If the problem is solved, Work may continue.

2. Unacceptable Segregation Suspected

   When the Engineer observes segregation in the finished mat and the work may be unacceptable, follow these measures:

   a. Allow work to continue at Contractor's risk.

   b. Require Contractor to immediately and continually adjust operation until the visually apparent segregated areas are eliminated from the finished mat. The Department will immediately investigate to determine the severity of the apparent segregation as follows:
      - Take 6 in (150 mm) cores from typical areas of suspect segregation.
      - Test the cores for compliance with the mixture control tolerances in Section 828.

      When these tolerances are exceeded, suspend work for corrective action as outlined in Subsection 400.3.06.E.3.

3. Corrective Work

   a. Remove and replace (at the Contractor's expense) any segregated area where the gradation on the control sieves is found to vary 10 percent or more from the approved job mix formula, the asphalt cement varies 1.0% or more from the approved job mix formula, or if in-place air voids exceed 13.5% based on GDT 39. The control sieves for each mix type are shown in Subsection 400.5.01.B "Determine Lot Acceptance."

   b. Subsurface mixes. For subsurface mixes, limit removal and replacement to the full lane width and no less than 10 ft. (3 m) long and as approved by the Engineer.

   c. Surface Mixes. For surface mixes, ensure that removal and replacement is not less than the full width of the affected lane and no less than the length of the affected areas as determined by the Engineer.

      Surface tolerance requirements apply to the corrected areas for both subsurface and surface mixes.

400.3.07 Contractor Warranty and Maintenance

A. Contractor's Record

Maintain a dated, written record of the most recent plant calibration. Keep this record available for the Engineer's inspection at all times. Maintain records in the form of:

- Graphs
- Tables

- Charts
- Mechanically prepared data

400.4 Measurement

Thickness and spread rate tolerances for the various mixtures are specified in Subsection 400.4.A.2.b, Table 11, Thickness and Spread Rate Tolerance at Any Given Location. These tolerances are applied as outlined below:

A. Hot Mix Asphaltic Concrete Paid for by Weight

1. Plans Designate a Spread Rate

   a. Thickness Determinations. Thickness determinations are not required when the Plans designate a spread rate per square yard (meter).

      If the spread rate exceeds the upper limits outlined in the Subsection 400.4.A.2.b, Table 11, "Thickness and Spread Rate Tolerance at Any Given Location", the mix in excess will not be paid for.

      If the rate of spread is less than the lower limit, correct the deficient course by overlaying the entire lot.

      The mixture used for correcting deficient areas is paid for at the Contract Unit Price of the course being corrected and is subject to the Mixture Acceptance Schedule—Table 9 or 10.

   b. Recalculate the Total Spread Rate. After the deficient hot mix course has been corrected, the total spread rate for that lot is recalculated, and mix in excess of the upper tolerance limit as outlined in the Subsection 400.4.A.2.b, Table 11, "Thickness and Spread Rate Tolerance at Any Given Location" is not paid for.

      The quantity of material placed on irregular areas such as driveways, turnouts, intersections, feather edge section, etc., is deducted from the final spread determination for each lot.

2. Plans Designate Thickness

   If the average thickness exceeds the tolerances specified in the Subsection 400.4.A.2.b, Table 11, "Thickness and Spread Rate Tolerance at Any Given Location", the Engineer shall take cores to determine the area of excess thickness. Excess quantity will not be paid for.

   If the average thickness is deficient by more than the tolerances specified in the Thickness and Spread Rate Tolerance at Any Given Location table below, the Engineer shall take additional cores to determine the area of deficient thickness. Correct areas with thickness deficiencies as follows:

   a. Overlay the deficient area with the same mixture type being corrected or with an approved surface mixture. The overlay shall extend for a minimum of 300 ft (90 m) for the full width of the course.

   b. Ensure that the corrected surface course complies with Subsection 400.3.06.C.1, "Visual and Straightedge Inspection." The mixture required to correct a deficient area is paid for at the Contract Unit Price of the course being corrected.

      The mixture is subject to the Mixture Acceptance Schedule—Table 9 or 10 . The quantity of the additional mixture shall not exceed the required calculated quantity used to increase the average thickness of the overlaid section to the maximum tolerance allowed under the following table.

Table 11—Thickness and Spread Rate Tolerance at Any Given Location

Course	Thickness Specified	Spread Rate Specified
Asphaltic concrete base course	± 0.5 in (±13 mm)	+40 lbs, -50 lbs (+20 kg, -30 kg)
Intermediate and/or wearing course	± 0.25 in (± 6 mm)	+20 lbs, -25 lbs (+10 kg, -15 kg)
Overall of any combination of 1 and 2	± 0.5 in (±13 mm)	+40 lbs, -50 lbs (+20 kg, -30 kg)

Note 1: For asphaltic concrete 9.5 mm OGFC and 12.5 mm OGFC, control the spread rate per lot within 5 lbs/yd^2 (3 kg/m^2) of the designated spread rate. For asphaltic concrete 12.5 mm PEM, control the spread rate per lot within 10 lbs/yd^2 (6 kg/m^2) of the designated spread rate.

Note 2: Thickness and spread rate tolerances are provided to allow normal variations within a given lot. Do not continuously operate at a thickness of spread rate not specified.

When the Plans specify a thickness, the Engineer may take as many cores as necessary to determine the average thickness of the intermediate or surface course. The Engineer shall take a minimum of one core per 1,000 ft (300 m) per two lanes of roadway. Thickness will be determined by average measurements of each core according to GDT 42.

If the average exceeds the tolerances specified in the Subsection 400.4.A.2.b, Table 11, "Thickness and Spread Rate Tolerance at Any Given Location", additional cores will be taken to determine the area of excess thickness and excess tonnage will not be paid for.

B. Hot Mix Asphaltic Concrete Paid for by Square Yard (Meter)

1. The thickness of the base course or the intermediate or surface course will be determined by the Department by cutting cores and the thickness will be determined by averaging the measurements of each core.
2. If any measurement is deficient in thickness more than the tolerances given in the table above, additional cores will be taken by the Department to determine the area of thickness deficiency. Correct thickness deficiency areas as follows:
   a. Overlay the deficient area with the same type mixtures being corrected or with surface mixture. Extend the overlay at least 300 ft (90 m) for the full width of the course.
   b. Ensure the corrected surface course complies with Subsection 400.3.06.C.1, Visual and Straightedge Inspection"
   c. The mixture is subject to the Mixture Acceptance Schedule—Table 9 or 10.
3. No extra payment is made for mixtures used for correction.
4. No extra payment is made for thickness in excess of that specified.

NOTE: Thickness tolerances are provided to allow normal variations within a given lot. Do not continuously operate at a thickness not specified.

C. Asphaltic Concrete

Hot mix asphaltic concrete, complete in place and accepted, is measured in tons (megagrams) or square yards (meters) as indicated in the Proposal. If payment is by the ton (megagram), the actual weight is determined by weighing each loaded vehicle on the required motor truck scale as the material is hauled to the roadway, or by using recorded weights if a digital recording device is used.

The weight measured includes all materials. No deductions are made for the weight of the individual ingredients. The actual weight is the pay weight except when the aggregates used have a combined bulk specific gravity greater than 2.75. In this case the pay weight is determined according to the following formula:

$$T1 = T \times \left\{ \frac{\% AC + \left(\dfrac{\% \text{ Aggregate} \times 2.75}{\text{combined bulk Specific Gravity}} \right) + \% Y}{100} \right\}$$

Where:

T1	Pay weight, tonnage (Mg)
T=	Actual weight

% AC=	Percent asphalt cement by weight of total mixture
% Aggregate =	Percent aggregate by weight of total mixture
Combined Bulk Sp. Gr.=	Calculated combined bulk specific gravity of various mineral aggregates used in the mixture
% Y=	Percent hydrated lime by weight of mineral aggregate

D. Bituminous Material

Bituminous material is not measured for separate payment.

E. Hydrated Lime

When hydrated lime is used as an anti-stripping additive, it is not measured for separate payment.

F. Field Laboratory

The field laboratory required in this Specification is not measured for separate payment.

G. Asphaltic Concrete Leveling

Payment of hot mix asphaltic concrete leveling, regardless of the type mix, is full compensation for furnishing materials, bituminous materials, and hydrated lime (when required) for patching and repair of minor defects, surface preparation, cleaning, hauling, mixing, spreading, and rolling.

Mixture for leveling courses is subject to the acceptance schedule as stated in Subsection 400.3.06.A and Subsection 400.3.06.B.

H. Asphaltic Concrete Patching

Hot mix asphaltic concrete patching, regardless of the type mix, is paid for at the Contract Unit Price per ton (Megagram), complete in place and accepted. Payment is full compensation for:

- Furnishing materials such as bituminous material and hydrated lime (when required)
- Preparing surface to be patched
- Cutting areas to be patched, trimmed, and cleaned
- Hauling, mixing, placing, and compacting the materials

400.4.01 Limits

When the asphaltic concrete is paid for by the square yard (meter) and multiple lifts are used, the number and thickness of the lifts are subject to the Engineer’s approval and are used to prorate the pay factor for the affected roadway section.

400.5 Payment

When materials or construction are not within the tolerances in this Specification, the Contract Price will be adjusted according to Subsection 106.03, “Samples, Tests, Cited Specifications” and Subsection 400.3.06, “Quality Acceptance.”

Hot mix asphaltic concrete of the various types are paid for at the Contract Unit Price per ton (megagram) or per square yard (meter). Payment is full compensation for furnishing and placing materials including asphalt cement, hydrated lime when required, approved additives, and for cleaning and repairing, preparing surfaces, hauling, mixing, spreading, rolling, and performing other operations to complete the Contract Item.

Payment will be made under:

Item No. 400	Asphaltic concrete type Superpave, group-blend, Including polymer-modified bituminous materials and hydrated lime	Per ton (megagram)
Item No. 400	Asphaltic concrete type, Superpave, group-blend, including bituminous materials and hydrated lime	Per ton (megagram)
Item No. 400	Asphaltic concrete type Superpave, group-blend, Including bituminous materials, Gilsonite modifier, and hydrated lime	Per ton (megagram)
Item No. 400	_____ inches asphaltic concrete, type Superpave, group-blend including bituminous materials, Gilsonite modifier and hydrated lime	Per square yard (meter)
Item No. 400	Asphaltic concrete type Stone Matrix Asphalt, group-blend, including polymer-modified bituminous materials and hydrated lime	Per ton (megagram)
Item No. 400	Asphaltic concrete type OGFC, group 2 only, including bituminous materials and hydrated lime	Per ton (megagram)
Item No. 400	Asphaltic concrete type OGFC, group 2 only, including polymer-modified bituminous materials and hydrated lime	Per ton (megagram)
Item No. 400	Asphaltic concrete type Porous European Mix, group 2 only, including polymer-modified bituminous materials and hydrated lime	Per ton (megagram)

400.5.01 Adjustments

A. Materials Produced and Placed During the Adjustment Period

An adjustment period is allowed at the start of mixing operations for each type of mix placed on the Contract. Asphaltic Concrete OGFC or PEM shall be granted an adjustment period for the first 500 tons (500 Mg) produced for the Contract. A new adjustment period shall not be granted for a change of producer, mix design or asphalt plant location. The adjustment period is provided to adjust or correct the mix and to establish the construction procedures and sequence of operations.

The adjustment period consists of the tons (megagrams) of the affected mix produced and placed on the first day of operation. If this quantity is less than 500 tons (500 Mg), the Engineer may combine the tons (megagrams) produced and placed on the first day of operation with the tons (megagrams) produced and placed on the next production day of the affected mix for the adjustment period.

The material produced and placed during the mixture adjustment period is one lot. If the mix is adjusted during this period, a new lot may be necessary, but a new adjustment period will not be permitted.

This material shall be paid for at 100 percent of the Contract Unit Price provided it meets the minimum requirements for a 1.00 pay factor for asphalt cement content and a 0.90 pay factor for gradation in the Mixture Acceptance Schedule—Table 9 or 10 .

If the material placed during the adjustment period fails to meet the above requirements, it will be paid for using the applicable acceptance schedule. However, when mixture used for leveling at a spread rate of 90 lbs/yd² (50 kg/m²) or less is also used for the surface mix at a spread rate greater than 90 lbs/yd² (50 kg/m²), an additional adjustment period will be allowed for compaction only. This material will be paid for at a 1.00 pay factor provided it:

- Meets the minimum requirements for a 1.00 pay factor in the Mixture Acceptance Schedule—Table 9 or 10 for both asphalt content and gradation.
- Meets the minimum requirements for a 0.90 pay factor in Table 12 of Subsection 400.5.01C, “Calculate Mean Pavement Air Voids.

Mixture which does not meet these requirements shall be paid for using the applicable acceptance schedule.

B. Determine Lot Acceptance

Pay factor adjustments are based on control sieves and asphalt cement content. The control sieves used in the mixture acceptance schedule for the various types of mix are indicated below:

Control Sieves Used in the Mixture Acceptance Schedule	
Asphaltic concrete 25 mm Superpave	1/2 in., No. 8 (12.5 mm, 2.36 mm) sieves and asphalt cement
Asphaltic concrete 19 mm SMA	1/2 in., No. 8 (12.5 mm, 2.36 mm) sieves and asphalt cement
Asphaltic concrete 19 mm Superpave	3/8 in., No. 8 (9.5 mm, 2.36 mm) sieves and asphalt cement
Asphaltic concrete 12.5 mm Superpave	3/8 in., No. 8 (9.5 mm, 2.36 mm) sieves and asphalt cement
Asphaltic concrete 12.5 mm SMA	3/8 in., No. 8 (9.5 mm, 2.36 mm) sieves and asphalt cement
Asphaltic concrete 12.5 mm PEM	3/8 in., No. 8 (9.5 mm, 2.36 mm) sieves and asphalt cement
Asphaltic concrete 12.5 mm OGFC	3/8 in., No. 8 (9.5 mm, 2.36 mm) sieves and asphalt cement
Asphaltic concrete 9.5 mm Superpave	No. 4, No. 8 (4.75 mm, 2.36 mm) sieves and asphalt cement
Asphaltic concrete 9.5 mm SMA	No. 4, No. 8 (4.75 mm, 2.36 mm) sieves and asphalt cement
Asphaltic concrete 9.5 mm OGFC	No. 4, No. 8 (4.75 mm, 2.36 mm) sieves and asphalt cement
Asphaltic concrete 4.75 mm Mix	No. 8 (2.36 mm) sieve and asphalt cement

For projects which do not have milling quantities established as a Pay Item, the Department will pay for 12.5 mm OGFC and PEM placed on ramps and end of project transitions under the appropriate mixture pay item, but the mix shall be subject to the same gradation and control sieve requirements as asphaltic concrete 9.5 mm OGFC. Add polymer-modified bituminous material, hydrated lime, and stabilizing fiber to this mix.

The Department will perform the following tasks:

1. Using the Mixture Acceptance Schedule—Table 9 or 10, determine the mean of the deviations from the job mix formula per test results per lot.
2. Determine this mean by averaging the actual numeric value of the individual deviations from the job mix formula; disregard whether the deviations are positive or negative amounts.
3. Use the Asphalt Cement Content and Aggregate Gradation of Asphalt Concrete Mixture Acceptance Schedule—Table 9 to determine acceptance of surface mixes and the Mixture Acceptance Schedule—Table 10 to determine acceptance of subsurface mixes.

On Contracts involving 1,000 tons (1000 Mg) or less of asphaltic concrete, the mixture is accepted for 100 percent payment of the asphaltic concrete Unit Price provided it meets the following:

1. Minimum requirements for a 1.00 pay factor for asphalt cement content and a 0.90 pay factor for gradation in the applicable Mixture Acceptance Schedule—Table 9 or 10.
2. Minimum requirements for a 0.90 pay factor in Table 12 of Subsection 400.5.01C, “Calculate Pavement Mean Air Voids.

If the material placed on Contracts involving 1,000 tons (1000 Mg) or less of asphaltic concrete does not meet the above requirements, the material will be paid for using the applicable acceptance schedule.

C. Calculate Pavement Mean Air Voids

The Department will determine the percent of maximum air voids for each lot by dividing the pavement mean air voids by the maximum pavement mean air voids acceptable.

The Department will determine the payment for each lot by multiplying the Contract Unit Price by the adjusted pay factor shown in the following Air Voids Acceptance schedule:

Table 12 - Air Voids Acceptance Schedule

Pay Factor	Percent of Maximum Air Voids (Lot Average of Tests)	Percent of Maximum Air Voids (Lot Average all Tests) (for Reevaluations)
1.00	≤100	≤100
0.97	100.1 — 105	100.1 — 104
0.95	105.1 — 112	104.1— 109
0.90	112.1 — 124	109.1 — 118
0.80	124.1 — 149	118.1 — 136
0.70	149.1 —172	136.1 — 153
0.50	172.1 — 191	153.1 — 166

When recommended by the Office of Materials, Lots receiving less than 0.5 pay factor shall be removed and replaced at the Contractor's expense.

When the range tolerance is exceeded, the Department will apply a pay factor of 0.95 as described in Subsection 400.3.06.B.2.

D. Asphaltic Concrete for Temporary Detours

Hot mix asphaltic concrete placed on temporary detours not to remain in place as part of the permanent pavement does not require hydrated lime. Hot mix used for this purpose is paid for at an adjusted Contract Price. The payment for this item shall cover all cost of construction, maintenance and removal of all temporary mix. Hot mix asphaltic concrete placed as temporary mix shall meet requirements established in Subsection 400.3.05.F.

Where the Contract Price of the asphaltic concrete for permanent pavement is let by the ton (megagram), the Contract Price for the asphaltic concrete placed on temporary detours is adjusted by subtracting $0.75/ton ($0.85/mg) of mix used.

Where the Contract price of the mix in the permanent pavement is based on the square yard (meter), obtain the adjusted price for the same mix used on the temporary detour by subtracting $0.04/yd² ($0.05/ m²) per 1-in (25-mm) plan depth.

Further price adjustments required in Subsection 400.3.06, "Quality Acceptance," which are based on the appropriate adjusted Contract Price for mix used in the temporary detour work shall apply should temporary mix be left in place. Hot mix asphalt produced as temporary mix containing no hydrated lime shall be removed and replaced with permanent mix containing hydrated lime.

E. Determine Lot Payment

Determine the lot payment as follows:

1. When one of the pay factors for a specific acceptance lot is less than 1.0, determine the payment for the lot by multiplying the Contract Unit Price by the adjusted pay factor.
2. When two or more pay factors for a specific acceptance lot are less than 1.0, determine the adjusted payment by multiplying the Contract Unit Price by the lowest pay factor.

If the mean of the deviations from the job mix formula of the tests for a sieve or asphalt cement content exceeds the tolerances established in the Mixture Acceptance Schedule—Table 9 or 10 and if the Engineer determines that the material need not be removed and replaced, the lot may be accepted at an adjusted unit price as determined by the Engineer. If the pavement mean air voids exceed the tolerances established in the Air Voids Acceptance Schedule – Table 12, remove and replace the materials at the Contractor's expense.

If the Engineer determines the material is not acceptable to leave in place, remove and replace the materials at the Contractor's expense.

Section 401—Cold Mix for Patching

401.1 General Description

This Specification contains requirements for a mixture of mineral aggregates and cutback asphalt suitable for short periods of stockpiling.

401.1.01 Definitions

General Provisions 101 through 150.

401.1.02 Related References

A. Standard Specifications

Section 800—Coarse Aggregate

Section 802—Aggregates for Asphaltic Concrete

Section 820—Asphalt Cement

Section 821—Cutback Asphalt

Section 824—Cationic Asphalt Emulsion

B. Referenced Documents

ASTM D 396

ASTM D 975

401.1.03 Submittals

General Provisions 101 through 150.

401.2 Materials

Ensure that materials meet the following specifications:

Material	Section
Cationic Asphalt Emulsion, CMS-2	824.2.01
Cutback Asphalt, Grade MC-250	821.2.01
Asphalt Cement, PG 64-22	820.2.01
Liquifier, No. 2 Fuel Oil	ASTM D 396
Liquifier, No. 2 Diesel Fuel Oil	ASTMD 975
Fine Aggregate for Asphaltic Concrete	802.2.01
Coarse Aggregate for Asphaltic Concrete	802.2.02

For a list of sources, see QPL 70.

A. Substitutions

Instead of using MC-250 as a bituminous material, a mixture of PG 64-22 and either No. 2 heating fuel oil or No. 2 diesel fuel oil may be used in a blend of 67 percent PG 64-22 and 33 percent fuel oil. Blend these materials before mixing or add them separately when mixing.

B. Composition of Mixtures

Ensure that bituminous cold mixtures are uniform mixtures of aggregate, asphaltic material and, if required, mineral filler.

Ensure that the constituents are proportioned to produce mixtures that meet the requirements given in the Composition Table. Group I aggregate, Group II aggregate, or a blend of both may be used.

Aggregate meeting gradation the requirement for size 89 aggregate in Section 800 may be used instead of composite blends, at the Engineer's discretion.

Composition Table for Cold Mixes for Bituminous Plant Mixtures for Patching			
Cold Mix Type	**12.5 mm Superpave**	**9.5 mm Superpave (Level B)**	**9.5 mm Superpave (Level A)**
Gradation Requirements, Percent Passing, by Weight			
3/4 in (19 mm) sieve	100		
1/2 in ((12.5 mm) sieve	90 to 100	100	100
3/8 in (9.5 mm) sieve	70 to 89	90 to 100	90 to 100
No. 4 (4.75 mm) sieve		55 to 75	65 to 85
No. 8 (2.36 mm) sieve	34 to 39	42 to 47	53 to 58
No. 50 (300 µm) sieve	8 to 27	8 to 27	10 to 35
No. 200 (75 µm) sieve	3.5 to 7.0	4 to 7	4 to 7
Percent Residual AC, by Weight of Total Mixture	4.3 to 6.5	4.3 to 7.0	4.5 to 7.0

C. Mixing Temperature

The recommended temperatures for aggregate and bituminous materials to ensure proper mixing are as follows:

CMS-2	140-160 °F (60-70 °C)
PG 64-22	300-350 °F (150-175 °C)
MC-250	100-225 °F (40-105° C)
Aggregates	200-225 °F (95-105 °C)

401.2.01 Delivery, Storage, and Handling

A. Stockpiling the Mixture

1. Place the finished mixture in small stockpiles to allow the mixture to cure properly.
2. After curing, stockpile the mixture in one large stockpile if possible.
3. Ensure that the stockpiling area is clean and well drained.

401.3 Construction Requirements

General Provisions 101 through 150.

401.3.01 Personnel

General Provisions 101 through 150.

401.3.02 Equipment

General Provisions 101 through 150.

401.3.03 Preparation

General Provisions 101 through 150.

401.3.04 Fabrication

General Provisions 101 through 150.

401.3.05 Construction

General Provisions 101 through 150.

401.3.06 Quality Acceptance

General Provisions 101 through 150.

401.3.07 Contractor Warranty and Maintenance

General Provisions 101 through 150.

401.4 Measurement

Cold mix will be measured by weight in tons (megagrams) according at Subsection 109.01, “Measurement and Quantities,” and no deductions will be made for the asphalt cement or liquifier.

401.4.01 Limits

General Provisions 101 through 150.

401.5 Payment

Cold mix will be paid for at the Contract Unit Price per ton (megagram). Payment is full compensation for materials costs, production costs, and shall be FOB the stockpile at the plant.

Payment will be made under:

Item No. 401	Cold mix	Per ton (megagram)

401.5.01 Adjustments

General Provisions 101 through 150.

Section 402—Hot Mix Recycled Asphaltic Concrete

402.1 General Description

This work includes producing and placing hot mix recycled asphaltic concrete that incorporates reclaimed asphalt pavement (RAP), reclaimed asphalt shingles (RAS), virgin aggregate, hydrated lime, and neat asphalt cement.

402.1.01 Definitions

General Provisions 101 through 150.

402.1.02 Related References

A. Standard Specifications

Section 400—Hot Mix Asphaltic Concrete Construction

Section 800—Coarse Aggregate

Section 828—Hot Mix Asphaltic Concrete Mixtures

B. Referenced Documents

SOP 41 "Guidelines for RAP Stockpile Approval"

402.1.03 Submittals

A. Certified Weight Tickets

Notify the Engineer before removing RAP from a stockpile that belongs to the Department. Submit to the Engineer the certified weight tickets of materials removed from the stockpile.

B. Affidavit

Submit to the laboratory an affidavit stating the sources of stockpiled materials to be used on a State project. Include the following information in the letter:

- State project number
- Location from which the material was removed
- Approximate removal dates
- Mix types removed and the estimated quantity of each type in the stockpiles
- Other available information about the stockpiled material such as percentage of local sand in the RAP

Obtain specific approval from the laboratory to use RAP or RAS stockpiles.

Adhere to Guidelines for RAP Stockpile Approval.

402.2 Materials

A. RAP Material Composition

Use RAP materials from any of the following:

- Existing roadway
- Contractor's RAP stockpile that has been approved by the Department
- Department stockpile

NOTE: The location of Department RAP material stockpiles will be given on the Plans.

Do not use RAP materials that contain alluvial gravel or local sand in any mixture placed on interstate projects except for mixtures used in shoulder construction. When used in shoulder construction, limit RAP containing local sand or alluvial gravel so that the sand or gravel contributes no more than 20% of the total aggregate portion of the mix.

1. RAP Percentage

   For non-interstate projects, limit the percentage of RAP allowed in recycled mixes so that the overall amount of alluvial gravel does not exceed 5 percent of the total mix. The percentage of alluvial gravel, local sand, and Group I material in the RAP will be determined through petrographic analysis or available records.

2. RAP furnished to the Contractor but not used in the work remains the Contractor's property.

   RAP used in the recycled mixtures for mainline or ramps (if applicable) may make up from 0 to 40 percent of the mixture depending on the amount of RAP available, the production facilities, and whether the mixture meets the requirements in Section 828.

   The maximum ratio of RAP material to the recycled mixtures other than SMA is 40 percent for continuous mix type plants and 25 percent for batch type plants. The maximum ratio of RAP material to the recycled mixture is 15 percent for Stone Matrix Asphalt (SMA) mixes.

3. Process RAP Material

Process RAP material to be used in the recycled mixture so that 100 percent will pass the 2 in (50 mm) sieve. Additional crushing and sizing may be required if the RAP aggregate exceeds the maximum sieve size for the mix type as shown in Section 828. Obtain representative materials from the RAP stockpile for the mix design.

B. RAS Material

RAS materials are produced as a by-product of manufacturing roofing shingles and/or discarded shingle scrap from the reroofing of buildings.

1. Limit the amount of RAS material used in the recycled mixture to no greater than 5 percent of the total mixture weight.
2. Shred the RAS material before incorporating it into the mix to ensure that 100 percent of the shredded pieces are less than 1/2 in (12.5 mm) in any dimension.
3. Remove all foreign materials such as paper, roofing nails, wood, or metal flashing.
4. Provide test results for Bulk Sample Analysis, known as Polarized Light Microscopy, if post-consumer shingles are used to certify the RAS material is free of asbestos. Test stockpiles at the rate of one test per 1000 tons (megagrams) prior to processing.

Other than as specifically stated in this Subsection, ensure that RAS material is used according to the same requirements as described for RAP material.

C. Asphaltic Concrete Removed from an Existing Roadway

Asphaltic concrete removed from an existing roadway becomes the Contractor's property unless specified otherwise on the Plans. RAP material retained by the Department is designated on the Plans, and the RAP shall be stockpiled at the location specified on the Plans.

D. Local Sand and Group I Material in RAP

Use of local sand in recycled mixes is restricted as stipulated in Section 828 for the Project. However, RAP which contains local sand may be used in surface and intermediate layers of non-interstate projects so long as the RAP percentage used does not contribute more than 5% local sand to the total aggregate portion of the mix. The amount of local sand in the RAP material shall be considered when determining the percentage of local sand in the total mix.

Where Pay Items specify that Group II only aggregate is to be used, RAP which consists primarily of Group II aggregate, but contains some Group I aggregate, shall be limited such that the Group I aggregate makes up no more than 5% of the total aggregate portion of the mix. When a Blend I mix is specified, any Group I materials in the RAP will be considered when determining the Group I portion allowed in the total mix as specified in Subsection 828.2.A.2.

E. Asphalt Cement

Using laboratory evaluations, the Department will determine the asphalt cement grade to be used in the recycled mixture. The asphalt cement shall meet the requirements of Section 820.

When the asphalt cement is blended with asphalt cement recovered from the RAP material and after tests on residue from thin film oven tests, the asphalt cement shall have a viscosity of 6,000 to 16,000 poises (600 to 1600 Pa) or as approved by the Engineer. Recover asphalt cement from the recycled mixture to verify that the specified viscosity is being met.

If the Engineer determines during construction that the selected asphalt cement grade is not performing satisfactorily, the Department may change the asphalt cement grade in the mixture, with no change in the Contract Unit Price.

F. Recycled Mixture

The recycled mixture shall be a homogenous mixture of RAP or RAS material, virgin aggregate, hydrated lime, and neat asphalt cement. Ensure that the mixture conforms to an approved mixture design outlined in Section 828.

402.2.01 Delivery, Storage, and Handling

Separate the stockpiles by Project sources and by Group I and Group II aggregate types. Erect a sign on each stockpile to identify the source(s).

If RAP material from different project sources becomes intermixed in a stockpile, only use those materials when approved by the laboratory.

The Department may reject by visual inspection stockpiles that are not clean and free of foreign materials.

402.3 Construction Requirements

402.3.01 Personnel

General Provisions 101 through 150.

402.3.02 Equipment

A. Hot Mix Plant

Use a hot mix plant for the recycling process with necessary modifications approved by the Engineer to process recycled material. Design, equip, and operate the plant so that the proportioning, heating, and mixing yields a uniform final mixture within the job mix formula tolerances.

B. Cold Feed Bin

Proportion the RAP or RAS material using a separate cold feed bin. Ensure that the material meets the size requirements in Subsection 402.2, “Materials.” The ratio of the RAP or RAS to virgin aggregate shall be controlled gravimetrically.

C. Electronic Belt Weighing Devices

Use electronic belt weighing devices to monitor the flow of RAP or RAS and the flow of virgin aggregate. For batch-type plants, the RAP or RAS portion of the mix may be weighed in a weigh hopper before incorporating it into the pugmill. The RAP shall be screened through a 2-inch maximum sized screen prior to crossing the cold feed weigh. Ensure the amount of RAP material incorporated into the asphalt plant does not change after this final measurement is processed by the asphalt plant computer.

D. Feeders and Conveyors

Equip plants with an interlocking system of feeders and conveyors that synchronize the RAP or RAS material flow with the virgin aggregate flow. Ensure that the electronic controls track the flow rates indicated by the belt weighing devices and develop the signal to automatically maintain the desired ratio at varying production rates. Design the RAP or RAS feeder bins, conveyor system, and auxiliary bins (if used) to prevent RAP material from segregating and sticking.

402.3.03 Preparation

General Provisions 101 through 150.

402.3.04 Fabrication

General Provisions 101 through 150.

402.3.05 Construction

Follow the requirements in Section 400 for hot mix recycled asphaltic concrete production and placement, materials, equipment, and acceptance plans except as noted or modified in this Specification.

402.3.06 Quality Acceptance

The Department may require additional quality control tests to determine the RAP stockpile consistency and the RAP aggregate quality. In this case, conduct at least three extraction/gradation tests from each individual source. Ensure that aggregate meets the quality standards in Section 800.

402.3.07 Contractor Warranty and Maintenance

General Provisions 101 through 150.

402.4 Measurement

Recycled asphaltic concrete mixture, complete in place and accepted, is measured in tons (megagrams). The weight is determined by recorded weights if an approved recording device is used. Or, the weight is determined by weighing each loaded vehicle on an approved motor truck scale as the material is hauled to the roadway.

402.4.01 Limits

General Provisions 101 through 150.

402.5 Payment

The work performed and the materials furnished as described in this Specification will be paid for at the Contract Unit Price per ton (megagram). Payment is full compensation for providing materials, hauling and necessary crushing, processing, placing, rolling and finishing the recycled mixture, and providing labor, tools, equipment, and incidentals necessary to complete the work, including hauling and stockpiling RAP or RAS material.

Payment will be made under:

Item No. 402	Recycled asphaltic concrete ___ mm Superpave, group-blend, including bituminous materials	Per ton (megagram)
Item No. 402	Recycled asphaltic concrete ___ mm Superpave, group-blend, including bituminous materials and hydrated lime	Per ton (megagram)
Item No. 402	Recycled asphaltic concrete ___ mm Superpave, group-blend, including polymer-modified bituminous materials and hydrated lime	Per ton (megagram)
Item No. 402	Recycled asphaltic concrete ___ mm Superpave, Type__, group-blend, including bituminous materials and hydrated lime	Per ton (megagram)
Item No. 402	Recycled asphaltic concrete _____mm mix, group-blend, including bituminous materials and hydrated lime	Per ton (megagram)
Item No. 402	_____in (mm) recycled asphaltic concrete type Superpave, group-blend, including bituminous materials	Per square yard (meter)
Item No. 402	_____in (mm) recycled asphaltic concrete type Superpave, group-blend, including bituminous materials and hydrated lime	Per square yard (meter)
Item No. 402	_____in (mm) recycled asphaltic concrete type Superpave, group-blend, including polymer-modified bituminous materials and hydrated lime	Per square yard (meter)
Item No. 402	_____in (mm) recycled asphaltic concrete _____ mm mix, group-blend, including bituminous materials and hydrated lime	Per square yard (meter)
Item No. 402	Recycled asphaltic concrete patching including bituminous materials	Per ton (megagram)
Item No. 402	Recycled asphaltic concrete patching including bituminous materials and hydrated lime	Per ton (megagram)
Item No. 402	Recycled asphaltic concrete leveling including bituminous materials	Per ton (megagram)

Item No. 402	Recycled asphaltic concrete leveling including bituminous materials and hydrated lime	Per ton (megagram)
Item No. 402	Recycled asphaltic concrete type Stone Matrix Asphalt, group-blend, including polymer-modified bituminous materials and hydrated lime	Per ton (megagram)

A. Materials Produced and Placed During the Adjustment Period

An adjustment period is allowed at the start of mixing operations for each type of mix placed on the Contract. A new adjustment period shall not be granted for a change of producer, mix design or asphalt plant location. The adjustment period is provided to adjust or correct the mix and to establish the construction procedures and sequence of operations.

The adjustment period consists of the tons (megagrams) of the affected mix produced and placed on the first day of operation. If this quantity is less than 500 tons (500 Mg), the Engineer may combine the tons (megagrams) produced and placed on the first day of operation with the tons (megagrams) produced and placed on the next production day of the affected mix for the adjustment period.

The material produced and placed during the mixture adjustment period is one lot. If the mix is adjusted during this period, a new lot may be necessary, but a new adjustment period will not be permitted.

This material shall be paid for at 100 percent of the Contract Unit Price provided it meets the minimum requirements for a 1.00 pay factor for asphalt cement content and a 0.90 pay factor for gradation in the Mixture Acceptance Schedule—Table 9 or 10 .

If the material placed during the adjustment period fails to meet the above requirements, it will be paid for using the applicable acceptance schedule. However, when mixture used for leveling at a spread rate of 90 lbs/yd² (50 kg/m²) or less is also used for the surface mix at a spread rate greater than 90 lbs/yd² (50 kg/m²), an additional adjustment period will be allowed for compaction only. This material will be paid for at a 1.00 pay factor provided it:

- Meets the minimum requirements for a 1.00 pay factor in the Mixture Acceptance Schedule—Table 9 or 10 for both asphalt content and gradation.
- Meets the minimum requirements for a 0.90 pay factor in Table 12 of Subsection 400.5.01C, “Calculate Mean Pavement Air Voids.

Mixture which does not meet these requirements shall be paid for using the applicable acceptance schedule.

B. Determine Lot Acceptance

Pay factor adjustments are based on control sieves and asphalt cement content. The control sieves used in the mixture acceptance schedule for the various types of mix are indicated below:

Control Sieves Used in the Mixture Acceptance Schedule	
Asphaltic concrete 25 mm Superpave	1/2 in., No. 8 (12.5 mm, 2.36 mm) sieves and asphalt cement
Asphaltic concrete 19 mm SMA	1/2 in., No. 8 (12.5 mm, 2.36 mm) sieves and asphalt cement
Asphaltic concrete 19 mm Superpave	3/8 in., No. 8 (9.5 mm, 2.36 mm) sieves and asphalt cement
Asphaltic concrete 12.5 mm Superpave	3/8 in., No. 8 (9.5 mm, 2.36 mm) sieves and asphalt cement
Asphaltic concrete 12.5 mm SMA	3/8 in., No. 8 (9.5 mm, 2.36 mm) sieves and asphalt cement
Asphaltic concrete 9.5 mm Superpave	No. 4, No. 8 (4.75 mm, 2.36 mm) sieves and asphalt cement
Asphaltic concrete 9.5 mm SMA	No. 4, No. 8 (4.75 mm, 2.36 mm) sieves and asphalt cement
Asphaltic concrete 4.75 mm Mix	No. 8 (2.36 mm) sieve and asphalt cement

The Department will perform the following tasks:

1. Using the Mixture Acceptance Schedule—Table 9 or 10, of Subsection 400.3.06 to determine the mean of the deviations from the job mix formula per test results per lot.
2. Determine this mean by averaging the actual numeric value of the individual deviations from the job mix formula; disregard whether the deviations are positive or negative amounts.
3. Use the Asphalt Cement Content and Aggregate Gradation of Asphalt Concrete Mixture Acceptance Schedule—Table 9 or 10 of Subsection 400.3.06 to determine acceptance of surface mixes and the Mixture Acceptance Schedule—Table 10 of Subsection 400.3.06 to determine acceptance of subsurface mixes.

On Contracts involving 1,000 tons (1000 Mg) or less of asphaltic concrete, the mixture is accepted for 100 percent payment of the asphaltic concrete Unit Price provided it meets the following:

1. Minimum requirements for a 1.00 pay factor for asphalt cement content and a 0.90 pay factor for gradation in the applicable Mixture Acceptance Schedule—Table 9 or 10 ofSubsection 400.3.06.
2. Minimum requirements for a 0.90 pay factor in Table 12 of Subsection 402.5.01.C, "Calculate Pavement Mean Air Voids.

If the material placed on Contracts involving 1,000 tons (1000 Mg) or less of asphaltic concrete does not meet the above requirements, the material will be paid for using the applicable acceptance schedule.

C. Calculate Pavement Mean Air Voids

The Department will determine the percent of maximum air voids for each lot by dividing the pavement mean air voids by the maximum pavement mean air voids acceptable.

The Department will determine the payment for each lot by multiplying the Contract Unit Price by the adjusted pay factor shown in the following Air Voids Acceptance schedule:

Table 12 - Air Voids Acceptance Schedule

Pay Factor	Percent of Maximum Air Voids (Lot Average of Tests)	Percent of Maximum Air Voids (Lot Average all Tests) (for Reevaluations)
1.00	≤100	≤100
0.97	100.1 — 105	100.1 — 104
0.95	105.1 — 112	104.1— 109
0.90	112.1 — 124	109.1 — 118
0.80	124.1 — 149	118.1 — 136
0.70	149.1 —172	136.1 — 153
0.50	172.1 — 191	153.1 — 166

When the range tolerance is exceeded, the Department will apply a pay factor of 0.95 as described in Subsection 400.3.06.B.2.

D. Asphaltic Concrete for Temporary Detours

Hot mix asphaltic concrete placed on temporary detours that will not remain in place as part of the permanent pavement does not require hydrated lime. Hot mix used for this purpose is paid for at an adjusted Contract Price. The payment for this item shall cover all cost of construction, maintenance and removal of all temporary mix. Hot mix asphaltic concrete placed as temporary mix shall meet requirements established in Subsection 400.3.05.F.

Where the Contract Price of the asphaltic concrete for permanent pavement is let by the ton (megagram), the Contract Price for the asphaltic concrete placed on temporary detours is adjusted by subtracting $0.75/ton ($0.85/mg) of mix used.

Where the Contract price of the mix in the permanent pavement is based on the square yard (meter), obtain the adjusted price for the same mix used on the temporary detour by subtracting $0.04/yd² ($0.05/ m²) per 1-in (25-mm) plan depth.

Further price adjustments required in Subsection 400.3.06, "Quality Acceptance," which are based on the appropriate adjusted Contract Price for mix used in the temporary detour work shall apply should temporary mix be left in place. Hot mix asphalt produced as temporary mix containing no hydrated lime shall be removed and replaced with permanent mix containing hydrated lime.

E. Determine Lot Payment

Determine the lot payment as follows:

1. When one of the pay factors for a specific acceptance lot is less than 1.0, determine the payment for the lot by multiplying the Contract Unit Price by the adjusted pay factor.
2. When two or more pay factors for a specific acceptance lot are less than 1.0, determine the adjusted payment by multiplying the Contract Unit Price by the lowest pay factor.

If the mean of the deviations from the job mix formula of the tests for a sieve or asphalt cement content exceeds the tolerances established in the Mixture Acceptance Schedule—Table 9 or 10 and if the Engineer determines that the material need not be removed and replaced, the lot may be accepted at an adjusted unit price as determined by the Engineer. If the pavement mean air voids exceed the tolerances established in the Air Voids Acceptance Schedule – Table 12, remove and replace the materials at the Contractor's expense.

If the Engineer determines that the material is not acceptable to leave in place, remove and replace the materials at the Contractor's expense.

Section 403—Hot In-Place Recycled Asphaltic Concrete

403.1 Description

This Section covers the hot in-place recycling of the existing surface in a continuous multi-step process which includes:

- Softening the existing surface with heat
- Hot milling to obtain the depth shown in the plan typical section or stated in the contract general notes
- Applying a tack coat
- Applying a rejuvenating agent
- Adding plant produced asphaltic concrete and virgin aggregate, if needed, prior to remixing
- Thoroughly remixing, leveling, and relaying the recycled mixture

403.1.01 Definitions

General Provisions 101 through 150.

403.1.02 Related References

A. Standard Specifications

Section 106

Section 109

Section 400

Section 402

Section 800

Section 824

B. Referenced Documents

AASHTO T-49

AASHTO T-209

AASHTO TP 4

AASHTO TP 5

ASTM D92

ASTM D2170

ASTM D2872

ASTM D4124

GDT 38

GDT 42

Error! Reference source not found.GDT 83

GDT 115

GDT 119

GDT 125

GDT 126

GSP 15

403.1.03 Submittals

Submit the proposed mix design for approval. As a minimum, the design shall include the following:

- The proportional blend of in-place materials and rejuvenating agent
- The proportional percentage of virgin aggregate and plant-produced hot mix asphalt, if required
- The sources of all materials to be used in the mixture
- The theoretical maximum specific gravity of the final mixture determined by AASHTO T-209
- The air void volume of the mixture after compacting for 50 gyrations with a gyratory compactor according to AASHTO TP 5

Use an approved, qualified laboratory to perform the mixture design analysis. Ensure the final design mixture has an air void volume within 3-5%.

Submit to the Office of Materials (OM) representative samples of each ingredient to be used in the final in-place mixture for design verification and additional testing as needed. The Department will perform testing for moisture and rutting susceptibility. Adjust mixture proportions as needed to ensure the final mixture meets the following requirements:

- Average rut depth not to exceed 0.3 in (7 mm) when tested using GDT 115.
- Minimum tensile splitting ratio of 80% and minimum individual stress results of 60 psi (415 kPa) when tested using GDT 66.

EXCEPTION: A tensile splitting ratio of no less than 70% is acceptable so long as all individual test values exceed 100 psi (690 kPa).

Allow the Department two weeks to verify the mix design after receiving the proposed mix design and material. Do not begin recycling operations until the Department has approved the design and accepted the mixture.

403.2 Materials

The materials to be used and their specifications are listed below:

A. Aggregate

Add virgin aggregate, if required, which is from an approved source and which meets requirements of Section 800. Use the stone size and spread rate specified in the plans Additional virgin aggregate from approved sources may be added based on the mixture design analysis at no additional cost to the Department.

B. Plant-Produced Hot Mix Asphaltic Concrete

Add the type and amount of plant-produced asphaltic concrete, if required, as specified in the plans. Additional asphaltic concrete may be added based on the mixture design analysis at no additional cost to the Department. Ensure the hot mix asphaltic concrete is produced according to Section 400 and Section 402.

C. Asphalt Cement Rejuvenating Agent

Obtain approval by the Office of Materials for the source, amount, and type of rejuvenating agent to be used. The Department reserves the right to change,without a change in the contract unit price, the agent and amount being used in the mixture if it is determined by the Engineer that the rejuvenating agent is not performing satisfactorily.

D. Bituminous Tack Coat

Use a cationic asphalt emulsion CRS-2h, CSS-1h, or CQS-1h for the bituminous tack coat that meets Section 824. Apply the tack coat with a system equipped with positive stop/start capabilities that will prevent tack puddles and which will uniformly distribute the tack across the full width of the surface being recycled. Apply tack after the existing surface has been heated, milled, and removed from the roadway and prior to replacing the material onto the roadway.

E. Asphalt Modifier

Provide asphalt modifier as specified in the Plans. It shall be added at a dosage rate that will yield at least 3% solid polymer by weight of the asphalt cement of the in-place material. Asphalt modifiers shall be approved by the Office of Materials prior to use in the work. The Department reserves the right to change the type modifier and amount to be used, without a change in the contract unit price, if the Engineer determines that the asphalt modifier is not performing satisfactorily.

403.2.01 Delivery, Storage, and Handling

A. Aggregate Storage

Store or stockpile mineral aggregates in a manner that will prevent segregation, mixing of the various sizes, and contamination with foreign materials.

B. Storage of Bituminous Material

Always keep clean all equipment used to store and handle bituminous material and operate it in such a manner to prevent contamination with foreign matter.

403.3 Construction Requirements

403.3.01 Personnel

General Provisions 101 through 150.

403.3.02 Equipment

The Engineer shall approve all equipment, tools, and machines used to perform this work. Do not attempt work with malfunctioning equipment. The Engineer may stop the work if equipment and tools are not sufficient to place the materials satisfactorily.

A. Heating and Milling Units

Ensure the heating unit meets the following requirements:

- Capable of heating the asphaltic concrete pavement to a temperature high enough to remove excess moisture and allow hot milling of the material to the designated plan depth without breaking aggregate particles
- Controls the heating process to prevent charring the existing surface, avoid producing undesirable pollutants, and prevent differential softening of the pavement
- Confine the heat application under a shielded, or enclosed, hood

Make all efforts to protect adjacent landscape from heat damage. Rebuild, repair, restore, and make good all injuries or damages to adjacent landscape, at the Contractor’s expense. Equip the unit which contains milling heads with longitudinal grade controls as described in Subsectin 403.3.02.C which will consistently control the depth of the milling operation. Milling heads shall remove the heated existing pavement to the depth specified in the Plans for the full transverse width even if additional virgin aggregate or asphaltic concrete mixture is added at no cost to the Department.

Use a portable milling unit to remove heated material from around utility structures to the full plan depth just prior to placement of the recycled material. Do not attempt to remove heated material from utility structures with hand tools only and do not damage the structures. Repair any damage to structures at no cost to the Department.

B. Blending Unit

Provide a blending unit which meets the following requirements:

- Capable of blending the removed material and rejuvenating agent (as well as virgin aggregate, asphalt modifier, and plant-produced hot mix asphaltic concrete, if required) into a homogeneous mixture
- Synchronizes application of all materials based on the volume of material being recycled to provide a proportional application at the predetermined application rate

Add the rejuvenator after milling has taken place and before or during the blending process with a positive start/stop mechanism that is automatically controlled by the volume of recycled material to be rejuvenated. Do not add rejuvenator based on linear distance travelled.

Add asphalt modifier, if required, at locations specified in the Plans or directed by the Engineer. Add modifiers during the blending process through a distribution system that will uniformly control the rate of application based on the volume of material being recycled and which contains a measuring system to verify the dosage rate.

C. Screed

Ensure the screed meets the following requirements:

- Capable of collecting and distributing the recycled mixture over variable widths for the entire width being processed
- Capable of controlling transverse cross-slope as directed by the Engineer
- Provides a uniform cross-section without streaks or blemishes
- Controls longitudinal grade electronically in conjunction with a mobile reference or by a non-contacting laser or sonar type ski with at least four referencing stations mounted at a minimum length of 24 feet (7.2 m)

D. Auxiliary Equipment

Provide suitable surface cleaning equipment, hand tools, rollers, and other support equipment necessary to perform the work. Ensure all other equipment meets requirements of Section 400.

403.3.03 Preparation

General Provisions 101 through 150.

403.3.04 Fabrication

General Provisions 101 through 150.

403.3.05 Construction

A. Surface Preparation

Thoroughly clean the surface to be recycled of all dirt, vegetation, and other objectionable materials immediately prior to the affected area being recycled. Remove all metal raised pavement markers and thermoplastic paint markings prior to recycling.

B. Heat, Remove, and Blend Materials

Evenly heat the pavement at full lane width plus a minimum 3 in (75 mm) overlap onto adjacent pavement materials. Control the heating to ensure uniform penetration without differential softening of the surface, and so that the heated material has a temperature in the range of 240 ± 20 °F (115 ± 11 °C) measured immediately behind the heating unit. If virgin aggregate is added, distribute the aggregate across the entire width being recycled prior to the last heat application.

Hot mill and rework the pavement to the width and depth shown in the plan typical section. Control the width of each pass to provide proper placement of longitudinal joints. Control the depth of loosened pavement to within 1/4 in (6 mm) of the depth specified. Ensure the milled material is heated sufficiently so that it is free of lumps. Milled particles shall

not be greater than 1-1/2 in (40 mm) in size. Accomplish the recycling by using milling heads capable of gathering the loose material and conveying it to a mixing chamber. The mixing chamber should blend the material uniformly and create a windrow with the final mix. Do not use scrappers, scarifiers, or any mechanical means of removing the softened pavement other than milling heads.

Ensure the final blended mix in the windrow is uniform. All aggregate shall be consistently coated. There shall be no evidence of broken or fractured aggregate in the windrowed material. Inconsistency and or non-uniformity of the windrowed material prior to placement will result in the immediate cessation of recycling until a plan of corrective action is approved by the Engineer. After modifications to the equipment or adjustment to the additives proportions have been made and approved, the Contractor should be allowed to resume work in a 500 ft (152 m) test section to be evaluated by the Engineer prior to continuing recycling

Blend the removed material with a rejuvenating agent (and virgin aggregate, asphalt modifier, or plant-produced hot mix asphaltic concrete, if needed) to produce a homogeneous mixture. Control the rate of application of the rejuvenator to ensure compliance with the mix design and Dynamic Shear Rheometer (DSR) values specified in Subsection 403.3.06.A. Apply other materials as specified in the contract or as determined by the mix design analysis.

C. Tack Coat

Apply tack coat uniformly over the milled area prior to placement of the blended materials. Control the application rate within 0.04 – 0.06 gal/yd^2 (0.18 – 0.27 L/m^2). At any time during the recycling process it is observed that an adequate bond is not being achieved, three six-inch (150mm) cores may be obtained for testing. These cores will be evaluated for adequate bond strength using NCAT's bond shear device inconjunction with the Marshall Apaparatus. A minimum shear strength of 100 psi shall be required.

D. Application

Control placement of the mixture to produce a surface true to line, grade, and cross-slope with a uniform surface texture free of segregation, lumps, or other unacceptable streaks or blemishes as determined by the Engineer. Ensure the mixture meets the acceptance requirements for mixture quality, compaction, smoothness, and thickness as specified in Subsection 403.3.06.

E. Overlay

Overlay the recycled mixture, if required by the contract, by producing and placing a mixture that meets requirements of Section 400 and Section 402. Smoothness requirements for the hot in-place recycled mixture do not apply if the mixture is overlaid.

403.3.06 Quality Acceptance

A. Mixture

Base acceptance of the materials used in the work on Section 106 and Section 400 except that pay factors for gradation and asphalt content will not apply. Take a minimum of one sample of mixture for each day of operation to determine quality acceptance of the mixture.

Take samples directly behind the paver according to GSP 15 at the location determined by the Engineer. Perform extraction and gradation testing according to GDT 83 and GDT 38 or other suitable method approved by the Office of Materials. Determine the laboratory density, stability and flow of the mixture using the 50 blow Marshal proceedure in AASHTO T-245.

Recover the extracted asphalt cement using GDT 119 and test for dynamic shear according to AASHTO TP 5, Method for Determining the Rheological Properties of Asphalt Binder Using Dynamic Shear Rheometer (DSR). Adjust the amount of rejuvenator as necessary to maintain DSR results within a range of 800-2000 poises (80-200 Pa-s) when tested at 140 °F (60 °C). Do not continue the work until corrective adjustments are made if two consecutive samples exceed the range for DSR values.

Submit test results electronically to the Engineer and Office of Materials within 24 hours after samples are taken.

B. Compaction

Compact the recycled mixture immediately after placement so that the maximum Pavement Mean Air Voids is 7.0 percent or less based on the theoretical specific gravity measured daily using the T-209 method performed on mixture sampled directly behind the paver. Determine the mixture compaction using either GDT 39 or GDT 59. The compaction is accepted in lots defined in Subsection 400.3.06.A "Acceptance Plans for Gradation and Asphalt Cement Content" and is within the same lot boundaries as the mixture acceptance. Meet the compaction requirements of Subsection 400.3.06.B. and Subsection 400.5.01.C. The Department will perform all compaction testing.

C. Smoothness

The Department will perform acceptance testing for surface course smoothness tolerance using the Laser Road Profiler according to GDT 126. Smoothness testing will be performed on the mainline traveled way and on ramps more than one-half mile (kilometer) in length.

Clean the roadway of any debris and obstructions and provide traffic control to conduct the testing when requested by the engineer.

Ensure the pavement does not exceed a target smoothness index of 900. Do not continue the work until corrective adjustments have been made if the target value is exceeded. Perform corrective work at no expense to the Department by repeating the hot in-place recycling process, according to this Section, if the smoothness index exceeds 1025.

Maintain a 10 ft. (3 m) straightedge in the vicinity of the paving operation at all times to use in measuring minor surface irregularities and provide the labor for its use. Correct all irregularities in excess of 1/8 in (3 mm) in 10 ft. (3 m). Stop the operation until corrective measures are taken when irregularities such as rippling, tearing, or pulling indicate a continuing problem in equipment, mixture, or operating techniques.

D. Mill Depth

Mill heated material to the thickness specified in the plan typical section or contract general notes. Take cores at locations determined by the Engineer at a minimum frequency of one core per 1000 ft (300 m) per two lanes of roadway or five cores per day, whichever is less, to verify mill depth.

The Department will determine the average mill depth based on roadway core measurements according to GDT 42. Mill depth will be determined based on total rejuvenated thickness less any thickness contributed by added virgin materials.

To receive full payment for mill depth, ensure the average milled depth is no less than 1/4 in (6 mm) of that specified in the plan typical section or contract general notes. Apply a pay reduction of 25% to the total square yards (meters) applied that day if the average depth is less than that specified, by more than 1/4 in (6 mm) but no more than 1/2 in (13 mm) of that specified.

Take additional cores to determine the area of deficient depth if the average depth is less than that specified, by more than 1/2 in (13 mm).

E. Corrections

Correct any areas deficient in depth by more than 1/2 in (13 mm) by repeating the hot in-place recycling process at no expense to the Department. Stop the work until corrective measures are made if the average mill depth for two consecutive days is less than 1/4 in (6 mm) of that specified. No individual location shall be recycled more than 2 times. If after the second recycling process, the deficiency is still apparent, mill and in-lay this location with plant produced asphaltic concrete. The plant produced asphaltic concrete shall be equivalent to the recycled design properties.

F. Test Section and Acceptance

The contractor shall be granted a 1 lane mile (1600 m) test section at the beginning of construction to be evaluated by the Office of Materials for acceptance prior to continuing recycling. If any specified requirement is not obtained, work shall be immediately stopped. If at any time during construction, it is determined that the Contractor's equipment and recycling techniques can not consistently meet requirements, the recycling operation shall be stopped until the Office of Materials

reviews and approves all modifications in equipment and recycling techniques. The Contractor shall place a 500 ft (152 m) test section to be evaluated and accepted by the Office of Materials prior to resuming recycling.

G. Rutting susceptibility test.

Cores taken each day for depth verification shall be tested according to GDT 115. Maximum deformation shall be 5.0 mm (0.2 in).

403.4 Measurement

Hot in-place recycled asphaltic concrete mixture is measured by the square yard (meter) of the surface area completed and to the depth specified. In computing square yards (meters), the lengths and widths used shall be as specified in Section 109, Measurement and Payment.

Rejuvenating agent, virgin aggregate, and plant-produced asphaltic concrete shall be added as individual components of the recycled mixture as required in the mix design analysis. Include this cost in the unit bid price per square yard (meter). Bituminous materials for tack coat applied and accepted will be measured as outlined in Section 109.

403.4.01 Limits

General Provisions 101 through 150.

403.5 Payment

Hot in-place recycled asphaltic concrete is paid for at the contract unit price per square yard (meter). Payment is full compensation for furnishing all materials, all equipment, Work, and labor. Payment also includes removal of raised pavement markers and thermoplastic striping, if applicable, heating and hot-milling, adding rejuvenator, performing the mix design, performing project sampling and testing, and other incidentals necessary to complete the work. Aggregate and hot mix asphaltic concrete which may be added to meet requirements of the mix design analysis shall be included in the contract unit price.

Bituminous tack coat is paid for per gallon (liter) under separate payment. Hot mix asphaltic concrete specified for overlaying, if any, will be paid for under separate payment. Aggregate specified in the contract, if any, (excluding that required based on the mix design analysis) will be paid for under separate payment.

Payment will be made under:

Item No. 403	Hot in-place recycled asphaltic concrete	Per square yard (meter)
Item No. 403	Hot in-place recycled asphaltic concrete including polymer-modifier	Per square yard (meter)

403.5.01 Adjustments

General Provisions 101 through 150.

Section 404—Paver-Laid Surface Treatment

404.1 General Description

Specifications for this work will be included elsewhere in the Contract.

Section 405—Hot Asphalt-Vulcanized Rubber Seal Treatment

405.1 General Description

This work includes placing a hot asphalt–vulcanized rubber seal treatment on an existing pavement surface according to the Specifications.

405.1.01 Definitions

General Provisions 101 through 150.

405.1.02 Related References

A. Standard Specifications

Section 413—Bituminous Tack Coat

Section 424—Bituminous Surface Treatment

Section 800—Coarse Aggregate

Section 820—Asphalt Cement

B. Referenced Documents

General Provisions 101 through 150.

405.1.03 Submittals

General Provisions 101 through 150.

405.2 Materials

A. Asphalt Cement

Before adding rubber and diluent, ensure that the asphalt cement conforms to Section 820.2.01, PG 58-22.

B. Ground Vulcanized Tire Rubber

Ensure that the ground vulcanized tire rubber meets the following requirements:

Sieve Size	Maximum Percent Passing by Weight
No. 8 (2.36 mm)	100
No. 10 (2.0 mm)	98
No. 40 (425 µm)	10

Ensure that the granulated rubber has the following characteristics:

- A specific gravity of 1.17 ± 0.03
- No more than a trace of fabric
- Free of wire or other contaminating materials

  An exception is that up to four percent of calcium carbonate may be included to prevent the particles from sticking together.
- Fully vulcanized

C. Diluent

For diluent, use kerosene with a boiling point above 350 ºF (175 ºC).

D. Cover Aggregate

Ensure that cover aggregate conforms to Section 800, Class "A," Group II.

Ensure that gradation of the cover aggregate meets Section 800 for No. 7 stone.

Preheat the cover aggregate to 290 ºF to 350 ºF (140 ºC to 175 ºC) and precoat with a maximum of 0.75 percent of performance grade PG 58-22 described in Section 820. See Subsection 405.3.05.A, "Mixing."

405.2.01 Delivery, Storage, and Handling

General Provisions 101 through 150.

405.3 Construction Requirements

405.3.01 Personnel

General Provisions 101 through 150.

405.3.02 Equipment

Ensure that equipment conforms to Section 424 and the following:

A. Canvas Cover

If directed by the Engineer, cover exposed material with canvas to help prevent the temperature of exposed material from dropping. See Subsection 405.3.05.A, "Mixing."

B. Aggregate Spreader

Use an adjustable, self-propelled aggregate spreader to accurately spread the amounts given in the Plans per square yard (meter).

C. Rubber Tire Rollers

Use at least three rubber tire rollers loaded to 5,000 lbs (2275 kg) per tire. Inflate tires to 100 psi (700 kPa).

405.3.03 Preparation

A. Spread the Asphalt-Rubber Composition

Before applying the hot asphalt-rubber composition, clean and patch the existing pavement surface and treat with a bituminous tack coat as specified in Section 413.

B. Test the Distributor Trucks

Before spreading the asphalt-rubber composition, test distributor trucks for transverse spread within the previous 6 months. Prove to the Engineer that each transverse spread was as uniform as possible and variance was never greater than 15 percent.

NOTE: A transverse spread for other asphalt products will not be accepted. The rate of transverse spread will be determined according to the requirements of the Georgia tentative test method.

405.3.04 Fabrication

General Provisions 101 through 150.

405.3.05 Construction

A. Mixing

Mix asphalt and rubber as follows:

1. Before adding the rubber, ensure that the temperature of the asphalt is no higher than 325 °F (160 °C) for PG 58-22.
2. Rapidly combine the rubber with the asphalt. Mix the rubber until the material approaches a semi-fluid consistency. Ensure that the weight proportions of the two materials are as follows:

Asphalt	75 ± 2%
Rubber	25 ± 2%

3. Mix the hot asphalt and rubber for at least 5 minutes.

NOTE 1: Design the rubber and asphalt combination method to ensure that the Engineer can determine the percentages by weight of each component to be mixed.

Ensure that the mixing equipment can produce a homogenous mixture of rubber and asphalt to prevent separation.

NOTE 2: Preheating, precoating, and covering aggregate with canvas may be waived if proper facilities are not available and if application conditions are favorable. Precoating is often used for dust control.

4. After the asphalt and rubber have reacted fully, add a diluent to:
   - Temporarily reduce the viscosity of the mixture
   - Improve the spraying action from the distributor
   - Provide a better coating of cover aggregate

   The diluent amount is 5.5 percent to 7.5 percent, by volume, of the hot asphalt-rubber composition. When adding the diluent, ensure that the temperature of the hot asphalt-rubber composition does not exceed 350 °F (175 °C).

B. Spreading

Spread the asphalt-rubber mixture as follows:

1. When the proper consistency is reached, immediately begin application. Never hold the mixture at temperatures over 325 °F (160 °C) for more than 1.5 hours after reaching application consistency.
2. Use the following application rates:
   a. In areas where temperatures remain above 20 °F (–7 °C) during the winter season, apply the hot asphalt-rubber mixture at 0.55 gallons/yd², ± 0.03 gallons/yd² (2.5 liters/m², ± 0.15 liters/m²).
   b. In areas where temperatures drop below 20 °F (-7 °C); apply the mixture at 0.60 gal/yd², ± 0.03 gal/yd² (2.7liters/m², ±0.15 liters/m²) unless otherwise specified by the Engineer.

   Application rates are based on 7.5 lbs/gal (0.90 kg/L), hot, and conversions to the standard 60 °F (15 °C) are not necessary.

NOTE: Place the hot asphalt-rubber mixture only when the ambient temperature is 60 °F (15 °C) or above and rising.

3. Apply the cover aggregate at 25 to 40 lbs/yd² (14 to 22 kg/m²), which is 25 to 27 lbs (14 to 15 kg) for No. 7 stone and 35 to 39 lbs(19 to 21 kg) for No. 8 stone, or as directed by the Engineer.
4. Perform at least four complete coverages with the pneumatic rollers. Roll the cover aggregate immediately after application to ensure maximum aggregate embedment.

   Do not permit traffic on the completed surface until approved by the Engineer.
5. If heavy or high-speed traffic may displace the cover aggregate, apply 5 to 10 lbs/yd² (2.5 to 5.0 kg/m²) of sand after rolling and before opening the lane to traffic as directed.
6. Sweep the joint edges clean of overlapping cover aggregate before applying the adjacent asphalt–rubber material.

7. Avoid skips and overlaps at joints and protect the surfaces of adjacent structures from being spattered or marred. These defects will be corrected at the Contractor's expense.
8. Make transverse joints as follows:
   a. Place building paper over the ends of the previous applications.
   b. Start the adjoining application on the building paper.
   c. Remove and dispose of the paper to the Engineer's satisfaction.
9. In urban areas, remove excess chips within 24 hours after placing. Do not use gutter brooms or steel-tined brooms, and do not disturb the loose chips from parkways, sidewalks, and intersecting streets.

   Continue this operation until excess or loose rock is removed from the roadway surface and abutting Rights-of-Way.
10. If needed, apply a flush coat to areas without substantial traffic at the Engineer's direction. Apply light sanding after flushing to prevent pickup, if required.

405.3.06 Quality Acceptance

General Provisions 101 through 150.

405.3.07 Contractor Warranty and Maintenance

General Provisions 101 through 150.

405.4 Measurement

The quantity to be measured is the number of square yards (meters) of seal treatment completed and accepted. The length is measured along the surface. The width is specified on the Plans, plus or minus any authorized changes. Irregular areas are measured by the surface square yards (meters) within the lines shown on the Plans or authorized changes.

405.4.01 Limits

General Provisions 101 through 150.

405.5 Payment

The accepted quantity of seal treatment is paid for at the Contract Unit Price per square yard (meter). Payment is full compensation for providing materials, hauling, mixing, spreading, rolling, and performing any other work to complete the Item.

Payment will be made under:

Item No. 405	Hot asphalt vulcanized rubber seal treatment	Per square yard (meter)

405.5.01 Adjustments

General Provisions 101 through 150.

Section 406—Coal Tar Emulsion Seal Coat

406.1 General Description

Specifications for this work will be included elsewhere in the Contract.

Section 407—Asphalt-Rubber Joint and Crack Seal

407.1 General Description

This work includes filling (Type M) or sealing (Type S) joints and cracks in existing pavements with rubber asphalt mixtures. A polymer-modified asphalt rubber (PMAR) blend may be used in lieu of both Type M and Type S.

407.1.01 Definitions

Type M: Used to fill joints and cracks in Portland cement concrete or asphaltic concrete pavements when required by the Plans before placing an overlay.

Type S: Used to seal joints and cracks in Portland cement concrete and asphaltic concrete pavements and shoulders when not placing an overlay.

407.1.02 Related References

A. Standard Specifications

Section 820—Asphalt Cement

B. Referenced Documents

AASHTO PP5

ASTM D 4

ASTM D36

ASTM D3407

ASTM D 3583

407.1.03 Submittals

Certify that each lot of premixed material meets the requirements of this Specification and shall submit the test results of each lot for each Project. Ensure that each sealant lot is delivered in containers with the manufacturer's name or trademark and lot number plainly marked.

Furnish samples of the individual components of premixed material as follows:

- At least 20 lbs (10 kg) of rubber representative of each lot
- At least 5 gal (15 L) of asphalt containing additives as proportioned
- Proportional quantities of mixing aids or additives not included above

407.2 Materials

Ensure that the sealant material is a premixed, asphalt-rubber sealant mixture. Ensure that the mixture is a blend of asphalt cement, aromatic extender oil(s), and recycled or reclaimed tire crumb rubber (18 ± 1 percent and 22 ± 1 percent by weight for Type S and Type M, respectively based on weight) in a closely controlled manufacturing process. The dosage rates of tire crumb rubber may be reduced if a polymer modifier is added to the mixture. Produce a mixture with the following properties:

A. Workability

The mixture pours readily and penetrates a 1/4 in (6 mm) pavement joint or crack to a depth of at least 1 in (25 mm) when the application temperature of the fully reacted mixture is 350 ºF (204 ºC) and the air temperature is 35 ºF (2 ºC) or higher.

The mixture, when placed in conventional field installation equipment, readily melts to a pumping consistency after being heated to 400 °F (204 °C) for 2 hours maximum. The mixture remains in a pumping consistency when the temperature of

the field installation equipment is reduced to the normal operating temperature range of 300 ºF to 350 ºF (150 ºC to 175 ºC).

B. Curing

The mixture contains no water or volatile solvents and cures immediately when cooled to a sufficient viscosity to prevent tracking caused by traffic.

C. Softening Point and Flexibility

When a fully reacted mixture sample of asphalt-rubber has been heated at 350 ºF (175 ºC) for one hour, or when a PMAR blend has been heated at 380 ºF (195 ºC) for one hour, it shall passthe following laboratory tests:

1. Softening Point

   The minimum softening point by ring and ball described in ASTM D 36 is as follows:

PMAR	185 ºF (85 ºC)
Type S	135 ºF (60 ºC)
Type M	150 ºF (65 ºC)

2. Flexibility

   Bend a 1/8 in (3 mm) thick x 1 in (25 mm) wide x 6 in (150 mm) long mixture specimen after conditioning to 10 ºF (-12 ºC) at a minimum bending rate of 9 degrees per second(10 seconds maximum for a 90º bend) over a 1 in (25 mm) diameter mandrel without cracking.

D. Separation

Test the PMAR blend for phase separation by pouring a representative sample of the mixture into aluminum tubes 1 in (25 mm) in diameter and 5-1/2 in (137 mm) long as described in AASHTO PP5. Cure the samples at 325 ºF (165 ºC) for 48 hours. Take samples from the top and bottom of the tube and determine softening point as described in ASTM D 36. Average the test results from the top and bottom samples. If there is 4% or more difference between the average test result and either of the top or bottom test results, reject the mixture due to separation.

E. Adhesion

When cooled, the mixture bonds strongly to both asphalt and concrete pavement surfaces. The mixture contains no materials that chemically react with these surfaces to reduce the short-term and long-term adhesion bonds.

F. Acceptable Recycled or Reclaimed Tire Crumb Rubber

Before the rubber is added, ensure the asphalt cement used in the mixture conforms to the requirements of Section 820.2.01, PG 58-22 or PG 64-22.

Ensure that the recycled, reclaimed tire crumb rubber used in the mixture meets the following requirements:

- Was obtained from used pneumatic tires (such as automobile, truck, bus, etc.)—not solid tires and non-tire rubber sources
- Was produced from an ambient grinding process (crushes, tears, grinds, or wears the used rubber tires at or above ordinary room temperature that produces rubber particles with a ragged, sponge-like surface). Cryogenically ground rubber or tire buffings are prohibited.
- Contains recycled, vulcanized crumb rubber and/or reclaimed (devulcanized) rubber
- Contains at least 25 percent natural rubber by weight of the total rubber portion of the mixture
- Contains no more than a trace of fabric
- Is free of wire and other contaminating materials, except up to four percent calcium carbonate or talc to prevent rubber particles from sticking
- Contains no rubber particles greater than 1/4 in (6 mm) long

- Meets the following gradation requirements:

Sieve Size	Percent Passing
No. 10 (2.0 mm)	100%
No. 16 (1.18 mm)	95 to 100%
No. 30 (600 µm)	40 to 80%
No. 80 (180 µm)	0 to 5%

G. Poly-modified Asphalt Rubber

If a PMAR blend is used, ensure it meets the following additional requirements:

PROPERTY	SPECIFICATION LIMITS
Cone Penetration, 77 ºF (25 ºC)	30 - 60 dmm
Resilience, 77 ºF (25 ºC), % Recovery	30% minimum
Ductility, 77 ºF (25 ºC), 50 mm/minute	300 mm minimum
Asphalt Compatibility (ASTM D 3407)	Pass
Bitumen Content (ASTM D 4)	60% minimum
Tensile Adhesion (ASTM D 3583)	500% minimum
Rotational Viscosity (Brookfield), No. 5 spindle, 20 RPM, 400 ºF (205 ºC)	3,000 – 15,000 cp

407.2.01 Delivery, Storage, and Handling

Package the premixed sealant material in units weighing no more than 30 lbs (15 kg) with a maximum of two 30 lbs (15 kg) units per shipping container. Ensure that the plastic film used to package the units melts at normal application temperatures when placed in the installation equipment.

407.3 Construction Requirements

407.3.01 Personnel

General Provisions 101 through 150.

407.3.02 Equipment

A. Field Installation Equipment

Use field installation equipment that produces or maintains specified temperatures, even if filled to capacity.

Ensure that the equipment produces or maintains a homogenous mixture of asphalt and rubber at a uniform temperature without hot or cool spots or rubber and asphalt segregation in the mixture.

B. Crack Filling Equipment

Ensure that the equipment for filling the joints and cracks directs the sealant into the crack. Seal large cracks from the bottom up. Provide squeegees as necessary.

C. Air Compressor(s)

Ensure that the air compressors are satisfactory to the Engineer.

407.3.03 Preparation

A. Joint and Crack Preparation

Use compressed air to thoroughly clean the joints and cracks to be sealed.

Clean the pavement surface and check the joints and cracks to ensure that they are free of vegetation, dirt, dust, moisture, and other foreign material.

407.3.04 Fabrication

General Provisions 101 through 150.

407.3.05 Construction

A. Restrictions

Do not seal joints and cracks if:

- The joint or crack surface to be treated is not thoroughly dry.
- Rain is imminent.
- The air temperature is below 35 ºF (2 ºC).

B. Procedure

Follow this procedure to seal joints and cracks:

1. Place the prepackaged sealant mixture in the field installation equipment.
2. Heat the sealant mixture for the proper time and temperature to provide a full reaction between the asphalt and rubber.
3. Apply the mixture at the specified application temperature according to the manufacturer's recommendations or the laboratory's approval.
4. Carefully fill the joint or cracks, slightly overfull. Strike off the excess with a V-shaped squeegee to feather the sealant out to a width of approximately 2 in (50 mm).

407.3.06 Quality Acceptance

If the packaged units are bonded or stuck together or to the shipping container, or if packaging staples or fasteners cause sealant contamination, the material may be rejected as determined by the Engineer.

The manufacturer must meet the requirements of this Specification and furnish evidence of successful field installation and performance under similar environmental and project conditions.

407.3.07 Contractor Warranty and Maintenance

General Provisions 101 through 150.

407.4 Measurement

Joints and cracks will be measured by the linear foot (meter) by surface measure.

407.4.01 Limits

General Provisions 101 through 150.

407.5 Payment

Joints and cracks sealed according to the Plans and this Specification will be paid for at the Contract Unit Price bid.

Payment is full compensation for furnishing all materials and performing the work.

Payment will be made under:

Item No. 407	Polymer-modified asphalt –rubber joint and crack seal	Per linear foot (meter)
Item No. 407	Asphalt-rubber joint and crack seal, type “S”	Per linear foot (meter)
Item No. 407	Asphalt-rubber joint and crack seal, type “M”	Per linear foot (meter)

407.5.01 Adjustments

General Provisions 101 through 150.

Section 408—Joint and Crack Cleaning and Seal

408.1 General Description

Specifications for this work will be included elsewhere in the Contract.

Section 409—Latex Modified Asphalt Concrete

409.1 General Description

Specifications for this work will be included elsewhere in the Contract.

Section 410—Warm Mix Recycled Asphaltic Concrete

410.1 General Description

Specifications for this work will be included elsewhere in the Contract.

Section 411—Asphaltic Concrete Pavement, Partial Removal

411.1 General Description

This work includes removing portions of existing asphaltic concrete pavement, removing base and subgrade as shown on the Plans or as directed by the Engineer, and sawing joints in the existing asphaltic concrete pavement.

411.1.01 Definitions

General Provisions 101 through 150.

411.1.02 Related References

A. Standard Specifications

Section 205—Roadway Excavation

Section 444—Sawed Joints in Existing Portland Cement Concrete Pavements

B. Related Documents

General Provisions 101 through 150.

411.1.03 Submittals

General Provisions 101 through 150.

411.2 Materials

General Provisions 101 through 150.

411.2.01 Delivery, Storage, and Handling

General Provisions 101 through 150.

411.3 Construction Requirements

411.3.01 Personnel

General Provisions 101 through 150.

411.3.02 Equipment

General Provisions 101 through 150.

411.3.03 Preparation

General Provisions 101 through 150.

411.3.04 Fabrication

General Provisions 101 through 150.

411.3.05 Construction

A. Saw Joints

Saw joints as follows:

1. Saw joints true to the lines shown on the Plans or as directed by the Engineer.
2. Saw joints the full depth of the existing asphaltic concrete unless otherwise shown on the Plans or directed by the Engineer.
3. Leave a neat, vertical face for the full depth of the retained portion.

   The Engineer may approve sawing less than full depth if the Contractor demonstrates that the requirements can be met.

B. Remove Pavement

After sawing the joints, begin removing the isolated pavement.

Use removal methods that will not damage the pavement edges that will remain in place or impede the proposed construction.

Pavement, base, or subgrade removed becomes the Contractor's property unless otherwise specified in the Contract.

C. Protect Remaining Edges

After removing the pavement, protect the pavement edges that will remain in place.

1. Do not allow traffic or equipment to cross the remaining edges.
2. Repair or restore the damaged edges to the Engineer's satisfaction at no additional cost to the Department.

411.3.06 Quality Acceptance

General Provisions 101 through 150.

411.3.07 Contractor Warranty and Maintenance

General Provisions 101 through 150.

411.4 Measurement

This work will not be measured separately for payment.

411.4.01 Limits

General Provisions 101 through 150.

411.5 Payment

No separate payment will be made for the work described in this section.

When Item 205 is included in the Proposal as a Pay Item, payment for this work is included in payment for unclassified excavation by the cubic yard (meter) as described in Subsection 205.4, “Measurement.” Otherwise, payment is included in the overall price bid for other Contract Items.

Payment is full compensation for providing labor and equipment, sawing, removing and disposing, and providing other incidentals to accomplish the work described in this Specification.

Sawing Portland cement concrete overlaid with asphaltic concrete will be measured and paid for according to Section 444.

411.5.01 Adjustments

General Provisions 101 through 150.

Section 412—Bituminous Prime

412.1 General Description

This work includes preparing and treating an existing surface with bituminous material and blotter material, if required. Treat the surface according to these Specifications and conform to the lines shown on the Plans or established by the Engineer.

412.1.01 Definitions

General Provisions 101 through 150.

412.1.02 Related References

A. Standard Specifications

Section 424—Bituminous Surface Treatment

Section 821—Cutback Asphalt

B. Referenced Documents

General Provisions 101 through 150.

412.1.03 Submittals

General Provisions 101 through 150.

412.2 Materials

Unless otherwise specified, select the types of bituminous materials. The Engineer will determine the grade of materials to be used. The Specifications for the bituminous materials include:

Material	Section
Cutback Asphalt, RC-30, RC-70, RC-250 or MC-250, MC-30, or MC-70	821.2.01
Blotter Material (Sand)	412.3.05.G.3

412.2.01 Delivery, Storage, and Handling

General Provisions 101 through 150.

412.3 Construction Requirements

412.3.01 Personnel

General Provisions 101 through 150.

412.3.02 Equipment

Provide equipment that is in good repair, including at least the following units that meet the requirements of Subsection 424.3.02, "Equipment."

- Pressure distributor
- Power broom and blower
- Aggregate spreader (if required)
- Pneumatic-tired roller

412.3.03 Preparation

See Subsection 412.3.05.B, "Condition of Surface."

412.3.04 Fabrication

General Provisions 101 through 150.

412.3.05 Construction

Prime the following bases and other areas:

- Cement or lime stabilized bases or sub-bases, regardless of pavement thickness
- Soil or aggregate bases or sub-bases on which bituminous surface treatment will be placed
- Soil or aggregate bases or sub-bases on which less than 5 in (125 mm) total thickness of hot mix asphaltic concrete will be placed

Prime is not required on driveway construction and paved shoulders.

A. Weather Limitations

Do not apply bituminous prime under any of these conditions:

- Surface is wet.
- Air temperature is below 40 ºF (4 ºC) in the shade.
- Rain is imminent.
- Weather conditions may prevent proper prime coat construction.

B. Condition of Surface

Ensure that the surface to which the prime is to be applied has been finished to the line, grade, and cross section specified.

Ensure that the surface is uniformly compacted and bonded. Correct surface irregularities according to the Specifications for the construction being primed.

C. Cleaning

Remove from the road loose material, dust, caked clay, and other material that may prevent bonding of the prime with the surface. Use power sweepers or blowers the full width of the prime and 2 ft (600 mm) more on each side. Where necessary, sweep by hand.

D. Moisture

Ensure that the surface is only slightly damp. If the surface is too wet, allow it to dry. If it is too dry, the Engineer may require that it be sprinkled lightly just before priming.

E. Temperature and Surface Texture

The surface texture and condition of the surface determine the bituminous material grades to be used.

The following table shows the bituminous material grades and application temperatures as they are applied to various surface textures.

Base Texture	Tight	Average	Open
Materials and grade	MC-30 RC-30	RC-70 or MC-70	RC-250 or MC-250
Application temperature °F (°C)	80–120 (27–49)	105-180 (41–82)	145–220 (63–104)

The Engineer will determine the temperature for applying bituminous prime within the limits shown above.

Heat and apply bituminous materials as specified in Subsection 424.3.05.D, “Heating Bituminous Material” and Subsection 424.3.05.E, “Applying Bituminous Material.”

F. Amount and Extent of Prime

The Engineer will determine the exact amount of bituminous material to be used within minimum and maximum rates of 0.15 to 0.30 gal/yd² (0.7 to 1.4 liters/m²). Apply the specified amount as follows:

1. Apply the determined amount uniformly and accurately. Ensure that the amount applied to any 0.5-mile (800 m) section is within 5 percent of the amount specified.
2. Apply the prime the full width of the proposed wearing surface that will be superimposed plus 6 in (150 mm) more on each side.

G. Protection, Curing, and Maintenance

Do the following after priming the surface:

1. Close to Traffic

   Do not allow traffic on the primed surface. Leave the surface undisturbed until the prime thoroughly cures and does not pick up under traffic.
2. Roll

   If the surface becomes soft after it is primed, roll the surface longitudinally with a pneumatic-tired roller at no more than 6 mph (10 kph) until the surface is firmly set.
3. Blot

   If necessary to prevent the prime from being picked up, spread clean, dry, sharp sand over the surface by hand or mechanically. Apply sand only to places that are tacky and use the least amount needed to prevent pick up. No extra payment for this work or material will be made.
4. Open to Traffic

After rolling and sanding (if required), open the primed surface to ordinary traffic subject to the conditions in Subsection 412.3.05.G.1, “Close to Traffic.”

5. Curing and Maintenance

   The primed surface is properly cured when it has penetrated the base sufficiently to not be picked up or displaced by traffic. Temperature and weather conditions may increase curing time. Insure the primed surface has cured to the satisfaction of the Engineer prior to its being covered by other construction.

   Maintain the prime coat and the primed surface course until it is covered by other construction. Repair potholes, scabs, and soft spots prior to covering with other construction. Remove excess bituminous material.

412.3.06 Quality Acceptance

General Provisions 101 through 150.

412.3.07 Contractor Warranty and Maintenance

General Provisions 101 through 150.

412.4 Measurement

Bituminous material for prime is not measured for separate payment.

412.4.01 Limits

General Provisions 101 through 150.

412.5 Payment

Bituminous material for prime is not paid for separately. The cost to clean the surface, furnish, haul and apply materials including water and sand, roll, and perform repairs and maintenance is included in the Unit Price bid for each individual Base Item.

412.5.01 Adjustments

General Provisions 101 through 150.

Section 413—Bituminous Tack Coat

413.1 General Description

This work includes furnishing and applying a bituminous tack coat on a prepared road surface including cleaning the road surface.

413.1.01 Definitions

General Provisions 101 through 150.

413.1.02 Related References

A. Standard Specifications

Section 109—Measurement and Payment

Section 400—Hot Mix Asphaltic Concrete Construction

Section 424—Bituminous Surface Treatment

Section 427—Emulsified Asphalt Slurry Seal

Section 820—Asphalt Cement

Section 822 – Emulsified Asphalt

Section 824—Cationic Asphalt Emulsion

B. Referenced Documents

General Provisions 101 through 150.

413.1.03 Submittals

General Provisions 101 through 150.

413.2 Materials

Ensure materials meet the following Specifications:

Material	Section
Asphalt cement, performance grade PG 58-22, PG 64-22, or PG 67-22	820.2.01
Anionic emulsion asphalt NTSS-1HM	822.2.01
Cationic emulsified asphalt CRS-2h or CRS-3	824.2.01

Asphalt cement of performance grade PG 58-22, PG 64-22 or PG 67-22 is used for bituminous tack coat in work performed in Section 400. Use anionic emulsified asphalt as an option with the approval of the Engineer. Use cationic emulsified asphalt as a special application material only if directed by the Engineer.

The Department may change the grade or type of bituminous materials without a change in the Contract Unit Price if the Engineer determines the grade or type selected is not performing satisfactorily.

413.2.01 Delivery, Storage, and Handling

General Provisions 101 through 150.

Emulsified Asphalt

Maintain all equipment used for the delivery, storage, and handling of anionic emulsified asphalt or cationic emulsified asphalt to prevent contamination of the emulsion. Transfer anionic emulsified asphalt or cationic emulsified asphalt directly to the pressure distributor from the transport tanker.

Provide and maintain temperature measuring devices to continuously monitor the temperature of anionic emulsified asphalt or cationic emulsified asphalt in storage and in the pressure distributor. Do not allow anionic emulsified asphalt or cationic emulsified asphalt to freeze.

Note 1: Do not store anionic emulsified asphalt or cationic emulsified asphalt for a period longer than 30 days from the time of initial loading.
Note 2: Do not use anionic emulsified asphalt or cationic emulsified asphalt on GDOT funded Off System Projects after 30 days of initial loading.

413.3 Construction Requirements

413.3.01 Personnel

General Provisions 101 through 150.

413.3.02 Equipment

Provide equipment in good repair, including the following units that meet the requirements of Subsection 424.3.02, "Equipment".

- Power broom and blower
- Pressure distributor

Provide a dedicated pressure distributor for anionic emulsified asphalt NTSS-1HM to avoid contamination with incompatible materials.

413.3.03 Preparation

General Provisions 101 through 150.

413.3.04 Fabrication

General Provisions 101 through 150.

413.3.05 Construction

A. Seasonal and Weather Limitation

Do not apply tack coat if the existing surface is wet or frozen. Do not place emulsified asphalt if the air temperature in the shade is less than 40 °F (4 °C).

B. Application

Coat the entire areas to be paved with the tack coat unless directed otherwise by the Engineer. Apply tack coat with distributor spray bars instead of hand hoses, except in small areas inaccessible to spray bars.

Application Rates for Anionic Emulsified Asphalt or Cationic Emulsified Asphalt, gal/yd^2 (L/m^2)

Type Mix	Minimum	Maximum
All Mixes except OGFC and PEM	0.06 (0.270)	0.10 (0.450)
• On thin leveling courses and freshly placed asphaltic concrete mixes, reduce the application rate to 0.04 to 0.06 gal/yd² (0.180 to 0.270 L/m²). • Allow anionic emulsified asphalt or cationic emulsified asphalt to break for a minimum of 30 minutes after initial application. Proceed with paving only after the anionic emulsified asphalt NTSS-1HM has cured to the satisfaction of the Engineer. • Do not use anionic emulsified asphalt or cationic emulsified asphalt under OGFC or PEM.		

C. Temperature of Material

Apply bituminous materials within the temperature ranges specified below.

Bituminous Materials	Temperature of Application °F (°C)
Asphalt cement	350 - 400 (175 - 205)
Anionic Emulsified Asphalt NTSS-1HM	140 - 180 (60 - 80)
Cationic Emulsified Asphalt CRS-2h, CRS-3	140 - 180 (60 - 80)

D. Cleaning

Immediately before applying the tack coat, clean the entire area free of loose dirt, clay, and other foreign materials.

E. Application Rate

The Engineer will determine the application rate of the bituminous tack coat.

F. Limitations and Areas Coated

Apply only enough tack coat to the prepared road surface that can be covered with the new pavement course the same working day the tack coat is applied.

G. Maintenance and Protection

After applying the tack coat material, allow it to break until it is tacky enough to receive the surface course. Do not allow traffic on the tack.

413.3.06 Quality Acceptance

General Provisions 101 through 150.

413.3.07 Contractor Warranty and Maintenance

General Provisions 101 through 150.

413.4 Measurement

Bituminous materials for tack coat applied and accepted are measured as outlined in Subsection 109.02, "Measurement of Bituminous Materials."

Diluting emulsified tack coat is not ordinarily allowed except when used underneath slurry seal and approved by the Engineer. The composition of diluted emulsified tack coat defined in Subsection 427.3.05, "Construction" is measured by the gallon (liter) of diluted mix.

413.4.01 Limits

General Provisions 101 through 150.

413.5 Payment

The accepted volume of bituminous material will be paid for at the Contract Unit Price per gallon (liter) for bituminous tack coat of the type and grade approved by the Engineer, complete in place. Payment is full compensation for preparing, cleaning, furnishing, hauling, applying material, and providing incidentals to complete the work.

Payment will be made under:

Item No. 413	Bituminous tack coat	Per gallon (liter)
Item No. 413	Diluted emulsified asphalt tack coat	Per gallon (liter)

413.5.01 Adjustments

General Provisions 101 through 150.

Section 414—Hot Asphalt—Rubber Seal Treatment for Stress Relieving Interlayer

414.1 General Description

Specifications for this work will be included elsewhere in the Contract.

Section 415—Asphalt Concrete Open Graded Interlayer

415.1 General Description

Specifications for this work will be included elsewhere in the Contract.

Section 416—Intelligent Compaction for Asphalt Concrete

416.1 General Description

Specifications for this work will be included elsewhere in the Contract.

Section 417—Paver Mounted Temperature Equipment

417.1 General Description

Specifications for this work will be included elsewhere in the Contract.

Section 424—Bituminous Surface Treatment

424.1 General Description

This work includes placing one or more applications of bituminous material and aggregate on a previously prepared base or pavement.

424.1.01 Definitions

- **Single Surface Treatment:** One application of bituminous material that is covered with aggregate.
- **Double Surface Treatment:** A bituminous material application that is covered with aggregate of the size specified in the proposal followed by a second bituminous material application that is covered with a second specified size aggregate.
- **Triple Surface Treatment:** A bituminous material application that is covered with a specified size aggregate followed by subsequent applications of bituminous material that are covered with successively smaller size nominal aggregates.

424.1.02 Related References

A. Standard Specifications

Section 105—Control of Work

Section 800—Coarse Aggregate

Section 802—Aggregates for Asphaltic Concrete

Section 820—Asphalt Cement

Section 824—Cationic Asphalt Emulsion

B. Referenced Documents

QPL 65

424.1.03 Submittals

General Provisions 101 through 150.

424.2 Materials

A. Bituminous Material

Select the bituminous material from any type and grade listed in the materials table below. Notify the Engineer at least 10 days before ordering the bituminous material. The Engineer must approve the bituminous material choice.

For a list of latex sources, see QPL 65.

Ensure that materials meet the requirements of the following Specifications:

Material	Section
Asphalt Cement, Performance Grade PG 58-22 or PG 64-22*	820.2.01
Cationic Asphalt Emulsion, Grade CRS-2h or CRS-3*	824.2.01
Latex-Modified Cationic Asphalt Emulsion, Grade CRS-2L	824.2.02
* Use PG 64-22 or CRS-3 only at the Engineer's direction. (See Subsection 424.3.05.B.)	

B. Aggregates

The size and group of aggregates used in the surface treatment are specified in the Proposal under the appropriate Line Item.

Do not use unconsolidated limerock unless provided for in the Plans or Proposal.

Use Class B aggregates only where the surface treatment is used for shoulder construction or where it is to be overlaid with asphaltic concrete.

Material	Section
Coarse Aggregate, Class A Crushed Stone or Crushed Slag, Group I or II	800.2.01
Fine Aggregate for Asphaltic Concrete*	802.2.01
*For sand seal application, use WA 10 washed screenings made from Group II aggregates.	

424.2.01 Delivery, Storage, and Handling

General Provisions 101 through 150.

424.3 Construction Requirements

424.3.01 Personnel

General Provisions 101 through 150.

424.3.02 Equipment

Have the Engineer approve equipment types and quantities before using equipment on the Project.

Ensure that the equipment used to construct the surface treatment:

- Produces work that complies with the standards in this section
- Is on the Project and in proper working order before construction begins and during construction.

A. Aggregate Spreader

The Department will inspect annually the aggregate spreader before it is used in the work. If the spreader is approved, the Department will attach an equipment certification sticker to the spreader.

Use a self-propelled aggregate spreader that can apply aggregate at the desired rate uniformly and accurately without corrugation, overlaps, or excess deficient areas.

Ensure that the spreader can spread courses to the required widths. Provide spreaders to promptly cover the full width of the asphalt application.

B. Pressure Distributor

The Department will inspect annually the pressure distributor before it is used in the work. If the distributor is approved, the Department will attach an equipment certification sticker to the distributor. The pressure distributor should be equipped as follows:

1. Mount the pressure distributor on pneumatic tires wide enough to prevent damage to the road surface.
2. Design, equip, maintain, and operate the distributor so that the bituminous material will be heated and applied evenly throughout the length of the spray bars. Ensure that it maintains a constant, uniform pressure on the nozzles.
3. Install screens between the tank and the nozzles and clean them frequently to prevent clogging.

4. Use an adjustable distributor that can deliver controlled amounts of bituminous material from 0.04 to 1.0 gal/yd², ± 0.02 gal/yd² (0.18 to 4.53 L/m², ± 0.10 L/m²) up to 24 ft (7.2 m) wide without atomization, streaking, or pulsation in the flow.
5. Use a distributor equipped with the following:
   - A tachometer and thermometers to indicate the application rate and the temperature of the tank contents
   - Measuring devices to accurately indicate the amount of bituminous material, in gallons (liters), in the distributor before and after each application
   - Full circulating spray bars that can be adjusted laterally to conform to a stringline and capable of vertical and horizontal adjustment.
   - A positive shut-off control to prevent dripping bituminous material on the roadway
   - A distributor tank equipped with a sample valve in a safe and convenient location to obtain bituminous material samples

C. Heating Equipment

Ensure that heating equipment will heat and maintain the bituminous material uniformly at the temperature required. Provide an accurate thermometer.

D. Steel-Wheeled Rollers

Use self-propelled, tandem-type steel-wheeled rollers. The rollers shall weigh from 3 to 8 tons (3 to 7 Mg). Ensure that the roller weights within these limits can properly seat the aggregate without fracturing the aggregate particles. Equip the roller drums with scrapers to prevent pick up of material. Combination rollers with pneumatic-tired wheels that can be alternated with a steel drum are permitted as a substitute for steel-wheeled rollers.

E. Pneumatic-Tired Rollers

Use self-propelled, two axles, pneumatic-tired rollers with smooth-tread rubber tires aligned such that gaps between the tires on one axle are covered by the tires of the other axle. Equip the roller tires with scrapers and scrubbers to prevent pick up of material. Ensure that all tires are of the same size and ply rating and inflated to a minimum of 60 psi (415 kPa). Maintain tire pressure such that the difference in pressure between any two tires does not exceed 5 psi (35 kPa). Provide ballast as directed by the Engineer.

F. Power Broom and Power Blower

Provide at least one power broom and one power blower, or a combination power broom and blower that can remove dust or loose materials from the road surface.

424.3.03 Preparation

Firmly compact, finish, and prime new bases. Ensure that the bases conform to the lines, grades, and cross sections within the tolerances specified.

A. Removing Foreign Material

Use power brooms, power blowers, hand brooms, or other means to remove loose material, dust, dirt, clay, and other materials that prevent bituminous materials from adhering to the base.

Take special care to clean the outer edges thoroughly. Where necessary, use a motor grader blade to remove excess material off the paving edge.

B. Condition of Prime

Check the condition of prime as follows:

1. Ensure the prime is cured before placing the mat course.
2. Repair the prime if it is loose, soft, unbonded, removed, or damaged.

3. Remove concentrations of excess prime.
4. Perform additional rolling with a pneumatic-tired roller before surface treatment when directed by the Engineer.

424.3.04 Fabrication

General Provisions 101 through 150.

424.3.05 Construction

A. Observing Seasonal and Weather Limitations

Apply bituminous surface treatment only between April 15 and October 15 and only when:

- Ambient temperature has not been less than 45 ºF (7 ºC) for 48 hours immediately prior to application.
- No forecast of ambient temperature less than 45 ºF (7 ºC) for 48 hours immediately following application.
- Ambient temperature and road surface temperature is at least 60 ºF (16 ºC) and stable at the time of application.

No exceptions are permitted except as authorized by the Engineer.

Do not apply asphalt cement to a wet surface.

NOTE 1: When the relative humidity exceeds 80%, the ambient temperature exceeds 95 ºF (35 ºC), the pavement temperature exceeds 125 ºF (52 ºC) or the weather is windy or overcast, application of bituminous surface treatment will be at the discretion of the Engineer.

NOTE 2: If hot mix asphaltic concrete will be applied over the surface treatment, the Engineer may waive the seasonal limitations providing that traffic is not permitted on the surface treatment until it is covered with hot mix asphaltic concrete.

B. Using PG 64-22 or CRS-3

Only use PG 64-22 or CRS-3 when directed by the Engineer due to a problem with excessive aggregate pickup during high ambient temperature.

C. Observing Sequence of Operations and Quantities of Materials

The sequence of operations and quantities of materials are shown in Table 1, Table 2 and Table 3 (Table 1a—metric, Table 2a—metric and Table 3a—metric).

The Engineer will determine the material quantities to be used during construction and may change the minimum or maximum application rate of any course during construction if the total quantities are within the amounts shown in the Tables. Any deviation from the table quantities will require a negotiated adjustment of the Contract price authorized by an approved Supplemental Agreement.

When a single application of bituminous surface treatment is used as a Crack-Relief Interlayer, use the quantities of materials shown in Table 2 (Table 2a—Metric).

When a sand seal application is Specified, use the quantities of materials shown in Table 3 (Table 3a—Metric).

Section 424—Bituminous Surface Treatment – Table 1

Application		Type Construction									
		Single				Double			Triple		
Stone Sizes	1st application		#89	#7	#6		#7	#6		#6	#5
	2nd application						#89	#7		#7	#7
	3rd application									# 89	# 89
		Control Tolerance				Control Tolerance			Control Tolerance		
1st Application Bituminous Materials (gal/yd²) PG58-22 or PG64-22		± .02	.17–.19	.18–.25	.22–.30	± .02	.20–.27	.26–.34	± .02	.20–.30	.24–.34
CRS-2h, CRS-3		± .02	.20–.22	.21–.29	.25–.35	± .02	.23–.32	.30–.40	± .02	.23–.35	.28–.40
1st Application Stone (ft³/yd²)		± .03	.14–.18	.18–.26	.30–.42	± .03	.18–.26	.30–.42	± .03	.30–.42	.41–.53
2nd Application Bituminous Materials (gal/yd²) PG58-22 or PG64-22						± .02	.18–.24	.24–.31	± .02	.20–.27	.20–.27
CRS-2h, CRS-3						± .02	.21–.28	.28–.36	± .02	.23–.32	.23–.32
2nd Application Stone (ft³/yd²)						± .03	.14–.18	.18–.26	± .03	.18–.26	.18–.26
3rd Application Bituminous Materials (gal/yd²) PG58-22 or PG64-22									± .02	.18–.24	.18–.24
CRS-2h, CRS-3									± .02	.21–.28	.21–.28
3rd Application Stone (ft³/yd²)									± .03	.14–.18	.14–.18
Total Bituminous Materials (gal/yd²) PG58-22 or PG64-22		± .02	.17–.19	.18–.25	.22–.30	± .03	.38–.51	.50–.65	± .04	.58–.81	.62–.85
CRS-2h, CRS-3		± .02	.20–.22	.21–.29	.25–.35	± .03	.44–.60	.58–.76	± .04	.67–.95	.72–1.0
Total Stone (ft³/yd²)		± .03	.14–.18	.18–.26	.30–.42	± .04	.32–.44	.48–.68	± .05	.62–.86	.73–.97

Notes:

1. Target application rates for bituminous material, coarse aggregate and seal sand will be established by the Engineer within the limits shown in Table 1, based on roadway and traffic conditions.
2. Do not apply bituminous material or aggregate outside the specified minimum and maximum application rates regardless of the control tolerances shown for each application unless directed by the Engineer in accordance with No. 3 below.
3. At the Engineer's direction, application rates for bituminous materials and aggregate may be varied outside the specified limits for each course at no additional cost provided the combined total of materials is within the specified total minimum and total maximum application rates for the combined total of all courses.
4. Maintain the control tolerances shown above or stop the work until the necessary corrections are made.
5. Apply at least one seal coat to the mat course on the same day when multiple applications are specified.

Section 424—Bituminous Surface Treatment, Crack-Relief Interlayer – Table 2

Bituminous Material Application (gal/yd^2)	Application Rate	Control Tolerance
PG 58-22 or PG 64-22	.20 – .27	± .02
CRS-2h, CRS-2L or CRS 3	.25 – .35	± .02
Aggregate Application (ft^3/yd^2)	**Application Rate**	**Control Tolerance**
#89	.14 – .18	± .02
#7	.18 – .26	± .02

Notes:

- Target application rates for bituminous material and aggregate will be established by the Engineer within the limits shown in Table 2.
- When single surface treatment stone size No. 89 or No. 7 is applied over a milled surface, the minimum application rate for CRS-2h, CRS-2L or CRS 3 shall be 0.30 (gal/yd^2) and for PG 58-22 or PG 64-22 shall be 0.22 (gal/yd^2).
- Do not apply bituminous material or aggregate outside the specified minimum and maximum application rates regardless of the control tolerances shown for each application.
- Maintain the control tolerances shown above or stop the work until the necessary corrections are made.
- Cover the single surface treatment Crack-Relief Interlayer with HMA Leveling on the same day.

Section 424—Bituminous Surface Treatment, Sand Seal – Table 3

Aggregates	Application Rate (ft^3/yd^2)	Control Tolerance	Bituminous Material	Application Rate (gal/yd^2)	Control Tolerance
#6	.30 – .42	± .02	CRS-2h, CRS-2L or CRS 3	.23 – .35	± .02
			PG 58-22 or PG 64-22	.20 – .30	± .02
#7	.18 – .26	± .02	CRS-2h, CRS-2L or CRS 3	.21 – .29	± .02
			PG 58-22 or PG 64-22	.18 – .25	± .02
#89	.14 – .18	± .02	CRS-2h, CRS-2L or CRS 3	.20 – .22	± .02
			PG 58-22 or PG 64-22	.17 – .19	± .02
WA 10 Washed Screenings	.10 – .14	± .02	CRS-2h, CRS-2L or CRS 3	.10 – .25	± .02
			PG 58-22 or PG 64-22	.10 – .17	± .02

Notes:

1. Target application rates for bituminous material, coarse aggregate and seal sand will be established by the Engineer within the limits shown in Table 3, based on roadway and traffic conditions.
2. Do not apply bituminous material or aggregate outside the specified minimum and maximum application rates regardless of the control tolerances shown for each application unless directed by the Engineer in accordance with No. 3 below.
3. At the Engineer's direction, application rates for bituminous materials and aggregate may be varied outside the specified limits for each course at no additional cost provided the combined total of materials is within the specified total minimum and total maximum application rates for the combined total of all courses.
4. Maintain the control tolerances shown above or stop the work until the necessary corrections are made.
5. Cover the coarse aggregate seal stone with seal sand on the same day.

Section 424—Bituminous Surface Treatment – Table 1a (Metric)

Application		Type Construction									
		Single				Double			Triple		
Stone Sizes	1st application		#89	#7	#6		#7	#6		#6	#5
	2nd application						#89	#7		#7	#7
	3rd application									# 89	# 89
		Control Tolerance				Control Tolerance			Control Tolerance		
1st Application Bituminous Materials (L/m²) PG58-22 or PG64-22		± .09	.77–.86	.82–1.13	1.00–1.36	± .09	.91–1.22	1.18–1.54	± .09	.91–1.36	1.09–1.54
CRS-2h, CRS-3		± .09	.91–1.00	.95–1.31	1.13–1.58	± .09	1.04–1.45	1.36–1.81	± .09	1.04–1.58	1.27–1.81
1st Application Stone (m³/m²)		± .001	.005–.006	.006–.009	.01–.014	± .001	.006–.009	.01–.015	± .001	.01–.014	.014–.018
2nd Application Bituminous Materials (L/m²) PG58-22 or PG64-22						± .09	.82–1.09	1.09–1.40	± .09	.91–1.22	.91–1.22
CRS-2h, CRS-3						± .09	.95–1.26	1.27–1.63	± .09	1.04–1.45	1.04–1.45
2nd Application Stone (m³/m²)						± .001	.005–.006	.006–.009	± .001	.006–.009	.006–.009
3rd Application Bituminous Materials (L/m²) PG58-22 or PG64-22									± .09	.82–1.09	.82–1.09
CRS-2h, CRS-3									± .09	.95–1.27	.95–1.27
3rd Application Stone (m³/m²)									± .001	.005–.006	.005–.006
Total Bituminous Materials (L/m²) PG58-22 or PG64-22		± .09	.77–.86	.82–1.13	1.00–1.36	± .14	1.72–2.31	2.26–2.94	± .18	2.63–3.67	2.81–4.53
CRS-2h, CRS-3		± .09	.91–1.00	.95–1.31	1.13–1.58	± .14	1.99–2.72	2.63–3.44	± .18	3.04–4.30	3.26–4.53
Total Stone (m³/m²)		± .001	.005–.006	.006–.009	.01–.014	± .0013	.011–.015	.016–.024	± .0016	.021–.029	.025–.033

Notes:

1. Target application rates for bituminous material, coarse aggregate and seal sand will be established by the Engineer within the limits shown in Table 1a, based on roadway and traffic conditions.
2. Do not apply bituminous material or aggregate outside the specified minimum and maximum application rates regardless of the control tolerances shown for each application unless directed by the Engineer in accordance with No. 3 below.
3. At the Engineer's direction, application rates for bituminous materials and aggregate may be varied outside the specified limits for each course at no additional cost provided the combined total of materials is within the specified total minimum and total maximum application rates for the combined total of all courses.
4. Maintain the control tolerances shown above or stop the work until the necessary corrections are made.
5. Apply at least one seal coat to the mat course on the same day when multiple applications are specified.

Section 424—Bituminous Surface Treatment, Crack-Relief Interlayer – Table 2a (Metric)

Bituminous Material Application (L/m^2)	Application Rate	Control Tolerance
PG 58-22 or PG 64-22	.91 – 1.22	± .09
CRS-2h, CRS-2L or CRS 3	1.13 – 1.58	± .09
Aggregate Application (m^3/m^2)	**Application Rate**	**Control Tolerance**
#89	0.005 – 0.006	± .0007
#7	.006 – .009	± .0007

Notes:

- Target application rates for bituminous material and aggregate will be established by the Engineer within the limits shown in Table 2a.
- When single surface treatment stone size No. 89 or No. 7 is applied over a milled surface, the minimum application rate for CRS-2h, CRS-2L or CRS 3 shall be 1.36 (L/m^2) and for PG 58-22 or PG 64-22 shall be 1.00 (L/m^2).
- Do not apply bituminous material or aggregate outside the specified minimum and maximum application rates regardless of the control tolerances shown for each application.
- Maintain the control tolerances shown above or stop the work until the necessary corrections are made.
- Cover the single surface treatment Crack-Relief Interlayer with HMA Leveling on the same day.

Section 424—Bituminous Surface Treatment, Sand Seal – Table 3a (Metric)

Aggregates	Application Rate (m^3/m^2)	Control Tolerance	Bituminous Material	Application Rate (L/m^2)	Control Tolerance
#6	0.0102 – 0.0142	± .0007	CRS-2h, CRS-2L or CRS 3	1.04 – 1.58	± .09
			PG 58-22 or PG 64-22	0.91 – 1.36	± .09
#7	0.0061 – 0.0088	± .0007	CRS-2h, CRS-2L or CRS 3	0.95 – 1.31	± .09
			PG 58-22 or PG 64-22	0.81 – 1.13	± .09
#89	0.0047 – 0.0061	± .0007	CRS-2h, CRS-2L or CRS 3	0.91 – 1.00	± .09
			PG 58-22 or PG 64-22	0.77 – 0.86	± .09
WA 10 Washed Screenings	0.0034 – 0.0047	± .0007	CRS-2h, CRS-2L or CRS 3	0.45 – 1.13	± .09
			PG 58-22 or PG 64-22	0.45 – 0.77	± .09

Notes:

1. Target application rates for bituminous material, coarse aggregate and seal sand will be established by the Engineer within the limits shown in Table 3a, based on roadway and traffic conditions.
2. Do not apply bituminous material or aggregate outside the specified minimum and maximum application rates regardless of the control tolerances shown for each application unless directed by the Engineer in accordance with No. 3 below.
3. At the Engineer's direction, application rates for bituminous materials and aggregate may be varied outside the specified limits for each course at no additional cost provided the combined total of materials is within the specified total minimum and total maximum application rates for the combined total of all courses.
4. Maintain the control tolerances shown above or stop the work until the necessary corrections are made.
5. Cover the coarse aggregate seal stone with seal sand on the same day.

D. Heating Bituminous Material

Evenly heat the entire mass of bituminous material for each application under positive control. While the material is being applied, maintain it within the specified temperature range.

E. Applying Bituminous Material

The following are temperatures at which bituminous material shall be applied.

Bituminous Material	Asphalt Cement	CRS-2h	CRS-3	CRS-2L
Application temperature °F (°C)	275–350 (135–177)	140–180 (60–82)	140–180 (60–82)	140–180 (60–82)

NOTE 1: Do not store emulsified asphalts at temperatures exceeding 150 °F (65 °C) for any extended time.

NOTE 2: Do not place bituminous surface treatment on fresh asphaltic concrete, except for paved shoulders, until the asphaltic concrete has been in place at least 30 days.

The Engineer will designate the maximum area to which bituminous material may be applied at one time. Apply the material as follows:

1. After applying the bituminous material to the section, immediately cover it with the correct application rate of aggregate before beginning the next section.

   Do not apply the bituminous material to the full width of the pavement unless the aggregate spreader can immediately cover the full width of the applied material.

NOTE: Never allow bituminous material to chill, set up, dry, or reach a condition that impairs the retention of cover aggregate before the aggregate is applied.

2. When a longitudinal joint is necessary:
   - Do not overlap the applications more than 4 in (100 mm).
   - Do not leave any area uncovered.
   - Never allow excess quantities of bituminous materials to build up.
3. On curves that require widening:
   a. Shoot the extra width on the outside first.
   b. Shoot the normal width with the distributor and follow the inside paving edge.
4. Ensure that the spray of bituminous material is uniform at all times. If the spray is not uniform:
   a. Stop the work.
   b. Change equipment, personnel, or methods to attain the required uniformity.
   c. Apply bituminous material at one-half the width of the roadway, if necessary.
5. If streaking develops:
   a. Stop the distributor and correct the problem before proceeding.
   b. Use a hand hose or a hand pouring pot to cover the streaked areas at approximately the same application rate of bituminous material.
6. If a part of the work cannot be reached by the distributor, treat it by hand hoses with nozzles.
7. Protect curbs, gutters, handrails, and other structures from discoloration by the bituminous material. Remove bituminous material that is sprayed or spilled on these structures.
8. Ensure that the bituminous material joins neatly in place by beginning and ending the asphalt application from a heavy paper or tight trough that is longer than the width of the treatment being applied. Place it to catch and hold the surplus material.
9. When cleaning and emptying the distributor, empty it where the bituminous material can be covered with dirt and completely disposed of without damaging the Rights-of-Way.

F. Spreading Aggregates

Spread the aggregates as follows:

1. Ensure that aggregates do not contain free moisture when spread.
2. Apply aggregate immediately after applying bituminous materials.
3. Uniformly spread the aggregate at the specified rate without corrugations, overlaps, excess, or deficient areas.
4. Move the spreader at a uniform speed, regardless of the grade.
5. Ensure that the distance that the aggregate free falls remains constant during spreading.
6. Remove corrugations. Operate the spreader to prevent overlap of aggregates. If overlap occurs, remove the excess aggregate before rolling.
7. Ensure a uniform aggregate spread by hand spotting and brooming as necessary.

G. Rolling

Observe the following guidelines for rolling bituminous surface treatment:

1. Synchronize the speed of the distributor and aggregate spreader with that of the rolling operation.
2. Use a minimum of two (2) individual rollers, one of which must be a pneumatic-tired roller meeting the requirements of Subsection 424.3.02.E.
3. If a steel-wheeled roller will fracture the aggregate, use pneumatic-tired rollers only.
4. Begin rolling within one minute after spreading the aggregate.
5. Operate rollers at speeds not exceeding 5 mph.
6. Proceed in a longitudinal direction, beginning at the outside edge of the aggregate application.
7. A roller pass is defined as one trip in a single direction.
8. Overlap each roller pass by approximately 1/2 the roller width.
9. Provide a minimum of three (3) roller passes per roller for each layer of aggregate to properly embed the aggregate particles.

Note: Unless a sufficient number of rollers are in operation to complete the above requirements, do not make subsequent applications of bituminous material until rolling of the previous application is completed.

H. Brooming

Use a revolving broom as necessary, supplemented by hand brooming, to remove or redistribute excess stone. Sweep the completed surface treatment within the first three hours of the next available workday following placement. Take care not to unseat bonded stone when sweeping.

I. Controlling Traffic

Do not allow traffic on the surface treatment until the bituminous material has cured sufficiently to ensure that the aggregate will not be loosened, dislodged, or whipped off by slow moving traffic.

Control traffic to speeds not exceeding 25 mph for a minimum of two hours after application of the seal stone and until the Engineer permits the road to be opened to normal traffic speeds.

Use pilot vehicles to control traffic speeds.

424.3.06 Quality Acceptance

General Provisions 101 through 150.

424.3.07 Contractor Warranty and Maintenance

Maintain and protect the surface course as specified in Section 105 until the Project has been accepted. Make repairs as the Engineer directs. The cost of maintenance, protection, and repair is included in the Unit Prices Bid for the Item for which they apply.

424.4 Measurement

The area to be measured is the number of square yards (meters) of each type surface treatment completed and accepted.

424.4.01 Limits

The length is measured along the surface. The width is specified on the Plans, plus or minus any authorized changes. Irregular areas are measured by the surface square yard (meter) within the lines shown on the Plans or authorized changes.

424.5 Payment

The accepted area of surface treatment will be paid for at the Contract Unit Price per square yard (meter) complete for each type and stone size specified.

Payment will be made under:

Item No. 424	Single surface treatment stone size __ group__	Per square yard (meter)
Item No. 424	Double surface treatment stone size __ and __ group __	Per square yard (meter)
Item No. 424	Double surface treatment stone size __ and __ group __ with Seal Sand __ and Latex-Modified Emulsion	Per square yard (meter)
Item No. 424	Double surface treatment stone size __ and __ group __ with Seal Sand____	Per square yard (meter)
Item No. 424	Triple surface treatment stone sizes __, __ and __, group __	Per square yard (meter)

424.5.01 Adjustments

General Provisions 101 through 150.

Section 426—Sprinkle Overlay Treatment

426.1 General Description

Specifications for this work will be included elsewhere in the Contract.

Section 427—Emulsified Asphalt Slurry Seal

427.1 General Description

This work includes placing slurry seal. Emulsified asphalt slurry seal is a thin application of a mixture of fine non-plastic aggregate, emulsified asphalt, mineral filler, and water.

427.1.01 Definitions

General Provisions 101 through 150.

427.1.02 Related References

A. Standard Specifications

Section 413—Bituminous Tack Coat

Section 802—Aggregates for Asphaltic Concrete

Section 822—Emulsified Asphalt

Section 824—Cationic Asphalt Emulsion

Section 830—Portland Cement

Section 882—Lime

Section 883—Mineral Filler

B. Referenced Documents

GDT 91

GDT 43

427.1.03 Submittals

A. Slurry Seal Design

At least two weeks before beginning the work, submit to the Office of Materials (OM) design samples of each ingredient to be used in the slurry seal mix. Include in the samples information concerning sources, type of materials, and project number. Do not begin slurry seal work until the OMR has approved the slurry mix design.

Submit the slurry seal mix design that will be used on the Project to the Engineer.

B. Equipment Calibration

Before placing slurry seal, furnish the Engineer with a calibration of the slurry mixing equipment.

427.2 Materials

Ensure that the materials to be used meet the following specifications:

A. Aggregate

Ensure that the aggregate used in emulsified asphalt slurry seal meets the requirements of Subsection 802.2.01. Except, use aggregate manufactured from Group II, Class A or B crushed stone or slag with a sand equivalent value of at least 50.

Ensure that the aggregates shipped to the project are uniform and do not require blending or premixing at the storage area before use.

B. Mineral Filler

Material	Section
Portland Cement	830 and 883
Hydrated Lime	882 and 883

C. Emulsified Asphalt

Material	Section
Emulsified Asphalt: SS-1h	822
Cationic Asphalt Emulsion: CSS-1h	824

D. Water

Ensure that water for slurry seal mixtures is clear and free of oil, salt, acid, alkali, organic, and other harmful substances.

The Engineer may require a water sample be sent to the OMR for evaluation before work begins on the Project.

E. Mixture Composition

Use an emulsified asphalt slurry seal that is a uniform mixture of aggregate, emulsified asphalt, mineral filler, and water.

The Engineer may require any element to be adjusted or replaced to produce an acceptable slurry seal. Proportion the elements to produce a uniform mixture that meets the requirements of the Table below:

Emulsified Asphalt Slurry Seal Mixture		
Mixture Control Tolerances, %	Sieve Size	% Passing
±0	3/8 in (9.5 mm)	100
±6	No. 4 (4.75 mm)	90 to 100
±5	No. 8 (2.36 mm)	65 to 90
±4	No. 50 (300 µm)	20 to 45
±3	No. 200 (75µm)	8 to 16
Design Requirements		
±0.75	Range for percent residual asphalt	*7.5 to13.5
±0.2 (5)	Flow inch (mm), GDT 91	1 (25)
n/a	Wear lb/ft² (g/m²)GDT 43 maximum	0.220 (1075)
*Percent residual asphalt is based on weight of the dry aggregate.		

Emulsified asphalt slurry seal is used to seal small cracks and correct moderate surface condition. Apply this type at a rate of 10 to 20 lbs/yd² (5.5 to 11 kg/m²) based on dry aggregate weight.

If more than 20 lbs/yd² (11 kg/m²) of emulsified asphalt slurry seal is required, apply additional lifts of the same mixture.

Maintain the gradation and percent residual asphalt as shown on the slurry seal design or as established by the Engineer within the mixture control tolerances listed.

427.2.01 Delivery, Storage, and Handling

A. Transporting and Storing Asphalt Emulsions

Transport asphalt emulsions using containers free of foreign material. Asphalt emulsion will not be accepted if a transporting vehicle has leaked or spilled during transit.

Store the asphalt emulsion in stationary rail or truck tanks that can be used to fill the slurry seal truck tanks. Equip the storage and truck tanks to prevent water from entering the emulsion. Provide heat if necessary to prevent freezing.

B. Stockpiling Aggregates

Stockpile the aggregate in an area that drains readily. Take precautions to prevent stockpile contaminations such as soil, vegetation, or oversize rock. Load the aggregate on to the slurry seal trucks without segregating it.

427.3 Construction Requirements

427.3.01 Personnel

General Provisions 101 through 150.

427.3.02 Equipment

Equipment, tools, and machines used to perform this work are subject to the Engineer's approval. The Engineer may discontinue the work if more equipment and tools are needed to place the materials. Do not use malfunctioning equipment to perform the work.

A. Slurry Mixing Equipment

Before slurry seal placement begins, furnish the Engineer with a calibration of the slurry mixing equipment. Ensure that the mixing machine is equipped with the following:

- Revolution counter to count the feeder belt revolutions continuously or intermittently as desired by the Engineer
- Water pressure system and a fog-type spray bar to fog the surface prior to spreading the slurry mix
- Continuous flow mixing unit that can deliver a predetermined proportion of aggregate, water, mineral filler, and asphalt emulsion to the mixing chamber and discharge the thoroughly mixed product continuously

Pre-wet the aggregate and mineral filler in the machine immediately before mixing it with the emulsion.

NOTE: Use caution when mixing to ensure that the emulsion does not set up prematurely.

B. Slurry Spreading Equipment

Use a mechanical squeegee spreader with a flexible strike-off that contacts the surface (ensure that the spreader is adjustable to spread evenly and to prevent loss of slurry on varying grades and crowns)

Use a spreader equipped with augers, a steering device, a flexible strike-off, and a device to adjust the coverage width.

Keep the spreader box clean and free of asphalt and aggregate build-up. The type of flexible strike-off and the burlap drags or other drags are subject to the Engineer's approval.

C. Cleaning Equipment

Ensure that power brooms, power blowers, air compressors, water flushing equipment, and hand brooms can thoroughly clean cracks and the old surface.

D. Auxiliary Equipment

Provide hand squeegees, hand brooms, shovels, and other equipment needed to perform the work.

427.3.03 Preparation

Immediately before applying the slurry:

1. Remove loose material, silt spots, vegetation, and other objectionable material from the pavement. If the pavement has considerable cracks, do not flush it with water.
2. Prepare the surface as specified in the Standard Specifications for slurry seal.

427.3.04 Fabrication

General Provisions 101 through 150.

427.3.05 Construction

A. Observe Weather Limitations

Do not apply slurry seal if the pavement or ambient temperature is 55 °F (13 °C) or below and falling. If both the ambient and pavement temperatures are 45 °F (7 °C) or above and rising, the slurry seal may be applied.

If the relative humidity exceeds 80 percent or the weather is overcast, the Engineer will determine when to apply the slurry seal.

B. Apply Tack Coat

Before placing the slurry seal, apply a bituminous tack coat consisting of one part emulsion and three parts water to the old surface as follows:

1. Apply a tack coat with the same asphalt emulsion type and grade as used in the slurry seal.
2. Apply the tack coat according to Section 413.
3. Apply the tack coat with an asphalt distributor.
4. Apply the tack coat at a rate of 0.05 to 0.10 gal/yd² (0.23 to 0.46 L/m²) of the diluted emulsion. The Engineer will determine the exact application rate.

C. Prepare the Mix

Prepare the mix as follows:

1. Thoroughly mix the material proportions approved for use. Do not mix for more than four minutes.
2. Adjust the amount of water or mineral filler to reach the desired consistency.
3. If the proper slurry consistency cannot be maintained, stop the work and correct the problem by changing the proportions or material sources.

D. Apply the Slurry Seal

Place the slurry seal uniformly across the width of the traffic lane unless otherwise specified or directed by a Special Provision in the proposal or the Engineer. Carry enough slurry seal in the spreader to completely cover the surface. Apply the slurry seal as follows:

1. Adjust the squeegee action to permit the mix to flow freely and leave a smooth surface.
2. If local conditions require, pre-wet the surface with water by fogging ahead of the slurry box. Closely control pre-wetting to prevent water runoff or puddling.
3. Do not deposit slurry mixture that is not the desired consistency.
4. After depositing the slurry, do not add additional elements.
5. Prevent the following:
    - Lumping, balling, or unmixed aggregate
    - Segregation of the emulsion and aggregate fines from the coarse aggregate
    - Excessive buildup or unsightly appearance on longitudinal or transverse joints
6. If the coarse aggregate settles to the bottom of the mix, remove the slurry from the pavement.
7. Place longitudinal joints on two-lane roadways as close to the center of the pavement as possible.

   If the roadway has more than two lanes of traffic, place the longitudinal joints as close as possible to where traffic stripes will be placed.

E. Apply by Hand

Use approved squeegees to spread slurry in areas that are not accessible to the slurry spreader. Do not leave unsightly marks from the hand work.

F. Control Traffic

Do not allow traffic on the slurry seal until it has cured enough to withstand marring and tearing, and until no water will be pumped to the surface. Control traffic as necessary to prevent damage to the slurry. Repair any traffic damage to the slurry seal at the Contractor’s expense.

G. Observe Seasonal Limitations

Apply slurry seal between the dates given in the Table below. The dates are given by zones shown on the Georgia Geographic Map, below. The Engineer shall authorize any exceptions.

Zones	Dates
1	April 15 – October 1
2	April 10 – October 25
3	April 1 – October 31
4	April 1 – October 31

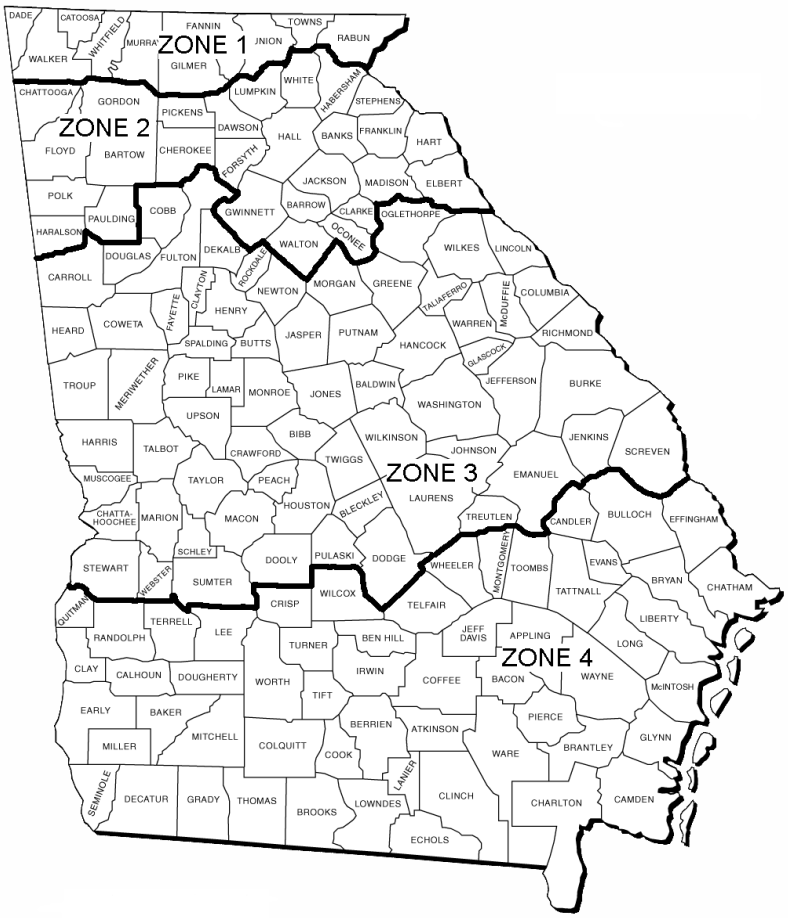

Georgia Department of Transportation Geographical Map for Slurry Seal

427.3.06 Quality Acceptance

General Provisions 101 through 150.

427.3.07 Contractor Warranty and Maintenance

General Provisions 101 through 150.

427.4 Measurement

Emulsified asphalt slurry seal is measured by the square yard (meter) complete in place and accepted. The lengths and widths to compute square yards (meters) are specified in Section 109.

Diluted emulsified tack coat is measured and paid for according to Section 413.

427.4.01 Limits

General Provisions 101 through 150.

427.5 Payment

Emulsified asphalt slurry seal is paid for at the full Contract Price per square yard (meter) and is full compensation for furnishing materials, including bituminous materials, equipment, work, and labor.

Payment will be made under:

Item No. 427	Emulsified asphalt slurry seal type ___ stone, Group II	Per square yard (meter)

427.5.01 Adjustments

General Provisions 101 through 150.

Section 428—Micro Surfacing

428.1 Description

This work covers the materials, equipment, construction, and application procedures for placing micro-surfacing material for filling ruts and surfacing existing paved surfaces. Properly proportion, mix, and spread all ingredients on the paved surface according to this Specification and as directed by the Engineer.

428.1.01 Definitions

General Provisions 101 through 150.

428.1.02 Related References

A. Standard Specifications

Section 413—Bituminous Prime

Section 424—Bituminous Surface Treatment

Section 824—Cationic Asphalt Emulsion

B. Referenced Documents

GDT 125

428.1.03 Submittals

A. Invoices

When the Department requests, furnish formal written invoices from a supplier for all materials used in production of micro surfacing. Show the following on the invoice(s):

- Date shipped
- Quantity in tons (megagrams)

Purchase LRA-modified emulsion from a supplier who will provide copies of invoices upon the Department's request.

B. Mix Design

Submit the proposed mix design for approval at least two weeks before beginning the mixing operations. As a minimum, the design shall include the following:

- Aggregate test properties
- Aggregate target gradation
- Results of Table 1 mixture design properties
- Design percent asphalt residue based on dry weight of the aggregate
- Mineral filler percentages based on dry weight of the aggregate
- Quantitative effects of moisture content on the unit weight of the aggregate (bulking effect)

Submit to the Office of Materials (OM) representative samples of each ingredient to be used in the micro-surfacing mixture for design verification at least two weeks before beginning mixing operations.Include information about sources, type of materials, and project number.

Do not begin micro-surfacing work until the OMR has approved the micro-surfacing design and accepted the mixture.

The Engineer's acceptance of the design is solely for quality control and does not release the Contractor from performing acceptable work under this Specification.

Ensure the mixture has sufficient working life to allow for proper placement at the existing ambient temperature and humidity. Redesign the mixture if a constituent must be replaced, or gradation changed, in order to produce an acceptable mixture. Proportion the constituents to produce a uniform mixture meeting the requirements of Table 1 .

Table 1—Mixture Design Properties

Micro-Surfacing		Type I	Type II
Mixture Control Tolerances	**Grading Requirements**	**Percent Passing**	**Percent Passing**
±0%	3/8-inch (9.5 mm)	100	100
±6%	No. 4 (4.75 mm)	90-100	60-95
±5%	No. 8 (2.36 mm)	65-90	45-75
±4%	No. 50 (300 μm)	20-45	15-35
±3%	No. 200 (75 μm)	5-15	5-15
	Design Requirements	**Range**	**Range**
±0.5%	Residual AC, %	6.0-9.0	6.0-9.0
N/A	Mineral Filler, %	0.5-3.0	0.5-3.0

Design Requirements – Micro Surfacing Type I and Type II			
Test No.	**Description**		**Specification**
AASHTO T-245 (Modified)	Flow		6-16
AASHTO T-245 (Modified)	Min. Stability, lb (kg), 50 Blow Marshall		1800 (8000)
ISSA TB-100	Wet Track Abrasion Loss (Maximum)	6-day soak	1 lb/yd² (538 g/m²)
		1-hour soak	1.5 lb/yd² (807 g/m²)
ISSA TB-147A or 147C	Vertical Displacement (Maximum)		10%
ISSA TB-109	Excess Asphalt by LWT (Maximum)		1 lb/yd² (538 g/m²)
ISSA TB-113	Mixing Time Test @ 100°F (38 °C) (Minimum)		45 Seconds
ISSA TB-139	Set Time Test (Minimum)	@ 30 minutes	12 kg-cm
		@ 60 minutes	20 kg-cm
ISSA TB-102	Water Resistance Test @ 30 Minutes		No Discoloration
ISSA TB-114	Wet Stripping Test (Minimum Retained)		90%
ISSA TB-115	System Compatibility		Pass

Note 1: Base percent residual asphalt and percent mineral filler on weight of the dry aggregate.

Note 2: Maintain the gradation and percent residual asphalt as shown on the micro-surfacing design or as established by the Engineer within the listed Mixture Control Tolerances. Meet mix control tolerances or make immediate adjustments to bring the gradation and percent residual asphalt back within tolerances, or the work will not be allowed to continue.

Note 3: Modify procedures stated in AASHTO T-245 for determining Flow and Marshall Stability to permit air drying of the mixture at 70 - 77 °F (21 - 25 °C) for 3 days before reheating and fabricating Marshall specimens.

428.2 Materials

The materials to be used and their specifications are listed below:

A. Aggregate

Use aggregate in micro-surfacing that meets the requirements of Subsection 802.2.02.

EXCEPTION: Aggregate shall be manufactured from Group II, Class A or B crushed stone or slag, and the Sand Equivalent Value shall not be less than 65 when tested according to AASHTO T-176.

Ensure that aggregates shipped to the project are uniform and do not require blending or pre-mixing at the storage area before use. Aggregates must meet the appropriate gradation as shown in Table 1 .

B. Mineral Filler

Use mineral filler that is Portland cement or hydrated lime which meets the following requirements:

Portland cement	Section 830 and 883
Hydrated Lime	Section 882 and 883

C. Cationic Asphalt Emulsion

Ensure that the emulsified asphalt is a cationic type CSS-lh(LRA) or CSS-1P that meets the requirements for CSS-1h of Section 824, modified to waive the cement-mixing test.

D. Latex Rubber Additive (LRA)

Ensure the LRA is a natural latex or an unvulcanized styrene-butadine rubber in an emulsified latex form. Provide certification from the LRA manufacturer that the LRA meets the following requirements:

Rubber Solids content, Minimum %, ASTM D 1417	60 (by weight)
Brookfield Viscosity, cps Maximum, ASTM D 1417	5000
Total Ash, Maximum %, ASTM D 297	3.5

Co-mill the LRA and the special emulsifiers with the asphalt cement while manufacturing the emulsified asphalt to produce a homogeneous mixture. Add the LRA in the necessary proportions to result in 3% neat latex by weight of residual asphalt cement in the emulsion. Ensure the LRA modified emulsified asphalt, when left undisturbed for 24 hours, shows no separation of emulsion and LRA and no color striations, but has a uniform color throughout.

Ensure that the residue from the LRA modified emulsified asphalt has a minimum softening point of 135 °F (60 °C) when tested according to AASHTO T-53.

EXCEPTION: The maximum test temperature shall not exceed 350° F (176°C) and the duration shall not exceed 20 minutes.

Formulate the emulsified asphalt to allow the paving mixture to cure at a rate that will permit traffic on the pavement within 1 hour after application without damaging the pavement surface.

E. Bituminous Tack Coat

Use a cationic asphalt emulsion CSS-lh or CQS-lh for the bituminous tack coat that meets Section 824 and is diluted according to Subsection 428.3.05.D.

F. Water

Use water for the micro-surfacing mixture that is potable and free of contaminants detrimental to the mixture.

G. Other Additives

Provide other additives as required to control the set time of the mixture in the field.

428.2.01 Delivery, Storage, and Handling

A. Aggregate Storage

Store or stockpile mineral aggregates in a manner that will prevent segregation, mixing of the various materials or sizes, and contamination with foreign materials. Do not use construction equipment on, or to ramp the stockpiled aggregate. Pass the aggregate over a scalping screen immediately before transferring it to the micro-surfacing mixing machine to remove oversized material.

B. Storage of Bituminous Material

Ensure that the bituminous storage is adequate to meet the requirements of the production rate. Always keep clean all equipment used to store and handle bituminous material and operate it in such a manner to prevent contamination with foreign matter.

428.3 Construction Requirements

428.3.01 Personnel

General Provisions 101 through 150.

428.3.02 Equipment

Obtain the Engineer's approval for all equipment, tools, and machines used to perform this Work. Do not attempt work with malfunctioning equipment. The Engineer may stop the work if equipment and tools are not sufficient to place the materials satisfactorily.

A. Mixing Equipment

Blend the paving mixture using a self-propelled micro-surfacing mixing machine that is:

- A continuous flow mixing unit
- Able to accurately deliver and proportion the aggregate, LRA-modified emulsion, mineral filler, field control additives, and water to a revolving multi-blade, twin shafted mixer
- Able to Discharge the mixed product on a continuous flow.

EXCEPTION: Blending the paving mixture may be accomplished with a truck mounted micro-surfacing mixing machine that meets the above specification, except for continuous flow, when placing the mixture on short streets or projects that are less than one-half mile (800 m) in length.

For streets or projects less than one-half mile (800 m) in length, individual truck-mounted units may be used for placement of micro-surfacing. For streets or projects one-half mile (800 m), or greater, in length, place micro-surfacing mixture with a machine that is equipped as follows:

- Has self-loading devices that load raw materials while continuing to lay micro-surfacing, thereby minimizing construction joints
- Has opposite side driving stations to optimize longitudinal alignment
- Allows the operator to have full hydrostatic control of the forward and reverse speed while applying micro-surfacing material

Thoroughly blend the mixture so that no uncoated aggregate is visible upon discharge from the mixing unit or in samples taken from the roadway.

1. Water Pressure System

   Use a mixing machine equipped with a water pressure system and nozzle-type spray bar to provide a water spray ahead of and outside the spreader box when required.

2. Proportioning Devices

   Use a machine equipped with individual volume or mass controls or other gauging devices for measuring and proportioning each material added to the mix. Properly calibrate, mark, and positively interlock each material control device.

   Ensure that the aggregate feed to the mixer is equipped with a revolution counter or similar device to determine the amount of emulsion used at any time. Before beginning the work, calibrate each mixing unit and provide a copy of the calibration worksheet to the Engineer. Once calibrated, do not change the aggregate and emulsion flows without the Engineer's approval. The water and additive may be adjusted in the field to control the mix properties to produce an acceptable mix.

3. Emulsion Pump

   The emulsion pump shall be a heated, positive displacement type pump.

4. Spreading Equipment

   Uniformly spread the micro-surfacing mixture using a mechanical-type spreader box attached to the mixer, equipped with paddles or other devices to agitate and spread the materials throughout the box. Use paddles that are designed to maintain sufficient turbulence in the mixture to prevent the material from setting-up in the box or causing side buildup and lumps. Provide a front seal to prevent loss of the mixture at the road contact surface.

   Provide an adjustable rear seal to act as a strike-off. Maintain the spreader to prevent the loss of the paving mixture during surfacing super-elevated curves. Design and operate the spreader box and rear strike-off to achieve a uniform consistency and produce a free flow of material to the rear strike-off without causing skips, lumps, or tears in the finished surface. Use a spreader box capable of lateral movement or with side-shift abilities to ensure proper alignment with the roadway.

B. Auxiliary Equipment

Provide a pressure distributor, power-broom, and power blower which meets requirements of Subsection 424.3.02.

Provide suitable crack and surface cleaning equipment, barricading equipment, hand tools, and other support equipment necessary to perform the work.

428.3.03 Preparation

General Provisions 101 through 150.

428.3.04 Fabrication

General Provisions 101 through 150.

428.3.05 Construction

A. General

Produce, transport, and place the specified materials according to these specifications and as approved by the Engineer. Produce a finished micro-surfacing that has a uniform texture free from excessive scratch marks, tears, or other surface irregularities. Ensure that the cured mixture fully adheres to the underlying surface. Based on a visual examination or test results, the Engineer may reject any work due to poor workmanship, loss of texture, raveling, or apparent instability.

B. Weather Limitations

Spread the micro-surfacing mixture only when:

- The ambient temperature for 48 hours immediately prior to placement has been at least 50 °F (10 °C).
- The current pavement surface and the ambient temperature is at least 50 °F (10 °C) and rising. Supply a surface temperature thermometer and a sling psychrometer and take temperature and humidity measurements as directed by the Engineer.
- The weather is not foggy or rainy.
- There is no forecast of temperatures below 32 °F (0 °C)within 48 hours from the time of placement.

Whenever the relative humidity exceeds 80 percent or the weather is overcast, the placement of micro-surfacing will be at the discretion of the Engineer.

C. Surface Preparation

Before applying the micro-surfacing mixture, thoroughly clean all cracks and the area to be surfaced to the Engineer's satisfaction.

D. Tack Coat

Use a tack coat which consists of cationic asphalt emulsion CSS-1h or CQS-1h. Dilute it at the rate of one part emulsion and three parts water, and apply with an asphalt distributor. The application rate is 0.05 to 0.10 gal/yd^2 (0.23 to 0.45 L/m^2) of diluted emulsion per square yard (meter). Apply the tack coat according to Section 413. If the surface course is placed within 30 days of the leveling course or if the Engineer determines that excessive tracking of material is evident, a tack coat will not be required between the leveling and surface course.

E. Application

Pre-wet the surface by spraying water ahead of and outside of the spreader box at a rate that dampens the surface without allowing water to flow freely ahead of the spreader box.

Spread the paving mixture on the prepared surface to produce a uniform finished surface. Take care when filling ruts to restore the designed profile of the pavement cross section. Excess crowning or overfilling of the rut area is not permitted. Use squeegees and lutes to spread the mixture in areas inaccessible to the spreader box and areas requiring hand spreading. Carry a sufficient amount of material at all times in all parts of the spreader box to ensure complete coverage.

Make adjustments to the additive, if necessary, to provide a slower setting time during hand spreading. If hand spreading is necessary, pour the mixture in a small windrow along one edge of the surface to be covered and uniformly spread with a hand squeegee or lute. Provide a smooth, neat seam where two passes meet. Immediately remove excess material from the ends of each run.

F. Traffic Control

Do not allow traffic on the micro-surfacing mixture until it has cured sufficiently to prevent pick up or marring of the surface. Repair any damage done by traffic to the mixture at no expense to the Department.

G. Rut Filling and Leveling (Scratch) Course

When required on the Plans, provide micro-surfacing materials to fill ruts, utility cuts, depressions in the existing surface, etc. before the final surface course is placed. When ruts are no more than 1/2 inch (13 mm) in depth, construct the leveling/scratch course using a full width spreader box with a steel strike-off. Fill ruts deeper than 1/2 inch (13 mm) independently with a rut-filling spreader box, 6 ft (1.8 m) in width, or as directed by the Engineer.

Place and open to traffic the rut filling and leveling (scratch) course at least 24 hours before surfacing.

H. Workmanship

Excessive buildup, uncovered areas, or unsightly appearance are not permitted on longitudinal or transverse joints. Place longitudinal joints on lane lines. Excessive overlap is not permitted. Ensure straight lines along the roadway centerline, lane lines, shoulder, or edge lines. Keep lines at intersections straight to provide a neat and uniform appearance.

1. **Finished Surface:** Ensure that the finished micro-surfacing has a uniform texture free of excessive scratch marks, tears, or other surface irregularities. Excessive tear marks are considered 4 marks that are 1/2 inch (13 mm) wide or wider and 6 inches (150 mm) or more long per 100 square yards (85 meters), or any marks 1 inch (25 mm) wide or wider or 4 inches (100 mm) long. Ensure that the edges of the micro-surfacing appear neat and that longitudinal alignment is parallel to the roadway centerline.
2. **Joints and Seams:** Produce neat and uniform longitudinal and transverse joints. Construct transverse joints as butt-type joints. Place longitudinal joints on lane lines when possible. Do not allow gaps between applications. Joints are acceptable if there is no more than a 1/2 inch (13 mm) vertical space for longitudinal joints nor more than 1/4 inch (6 mm) for a transverse joint between the pavement surface and a 4 ft (1.2 m) straightedge placed perpendicular on the joint.
3. **Areas the Mixing Machine Cannot Reach:** Surface these areas using hand tools to provide complete and uniform coverage. Clean and lightly dampen the area to be handworked before placing the mix. Ensure areas that require handwork produce a finished surface that is uniform in texture, dense, and has a neat appearance similar to that produced by the spreader box. Micro-surfacing material required to repair deficiencies due to unsatisfactory workmanship and the work required to mix and place the materials according to the Specifications, will be provided at no expense to the Deparment.

428.3.06 Quality Acceptance

Take two samples of mixture for determining quality acceptance for each day of operation. Test the second sample only if the results of the first sample are outside mixture control tolerances. Test the samples according to GDT 125. The deviation in test results from the Job Mix Formula will be used to determine compliance with the mixture control tolerances. If more than one sample is tested, the average deviation shall be used to determine compliance.

A mixture adjustment period will be provided during the first two days of operation. If the average deviation of sample results for the first day are outside the mixture control tolerances, you may adjust equipment settings to provide a mixture within the tolerances. Samples will be taken the second day (after equipment changes, if any, have been made) and the average deviation in test results will be calculated. If the average deviation of test results for the second day is within mixture control tolerances, mixture quality will be accepted for the first two days of operation. If the average deviation from the second day is not within mixture control tolerances for percent residual asphalt content, a 2% reduction in unit price will be assessed for each 0.1 percent the residual asphalt content is outside the mixture control tolerances for each of the first two days that tolerances were exceeded.

A. Emulsified Asphalt

Maintain the percent residual asphalt and gradation as shown on the micro-surfacing design, or as established by the Engineer, within the Mixture Control Tolerances listed in Table 1.

After the adjustment period, a 2% reduction in unit price will be applied for each 0.1 percent the residual asphalt content is outside the Mixture Control Tolerance given in Table 1 for the day's production represented by the sample. The average deviation of the samples will be used to determine conformance to the Mixture Control Tolerance. Do not continue to operate and place materials outside the mixture control tolerances. Adjust the placement operation as necessary to maintain production within the tolerances given.

B. Aggregate Application Rate

Control the target spread rate for micro-surfacing to within plus or minus 2 lbs/yd^2 (1 kg/m^2) of the spread rate specified in the Proposal based on the weight of dry aggregate. Mix placed in excess of the upper spread rate tolerance will not be paid for. The unit price will be reduced by 5% for each pound (0.5 kg) of aggregate per square yard (meter) less than the spread rate tolerances established above for each day's placement of material. Accept pay reduction for deficient daily production, or overlay the deficient area at full plan width and depth at the Contractor's expense. Do not continue to operate and place materials outside the spread rate tolerances. Adjust the placement operation as necessary to maintain production within the tolerances given.

428.3.07 Contractor Warranty and Maintenance

General Provisions 101 through 150.

428.4 Measurement

A. Micro-Surfacing

Micro-Surfacing, Type I or II surface course, is measured and accepted as completed by the in-place square yard (meter). In computing square yards (meters), the lengths and widths used shall be as specified in Section 109, "Measurement and Payment".

B. Leveling (Scratch Course)

A leveling (scratch course) is measured and paid for by the ton (megagram) of dry aggregate used. Tons (megagrams) of aggregate used shall be determined using the total daily revolutions of the aggregate feed belt and the corresponding gate setting and weight per revolution shown on the mixing unit calibration worksheet.

C. Tack Coat

Diluted emulsified tack coat is measured and paid for according to Section 413.

428.4.01 Limits

General Provisions 101 through 150.

428.5 Payment

Micro-surfacing will be paid for at the contract unit price, which is full compensation for furnishing all materials, including LRA modified bituminous materials, and for furnishing all equipment, work, and labor.

Payment will be made under:

Item No. 428	Micro-Surfacing, type I	Per square yard (meter)
Item No. 428	Micro-Surfacing, type I leveling	Per ton (megagram)
Item No. 428	Micro-Surfacing, type II	Per square yard (meter)
Item No. 428	Micro-Surfacing, type II leveling	Per ton (megagram)

428.5.01 Adjustments

General Provisions 101 through 150.

Section 429—Rumble Strips

429.1 General Description

This work includes furnishing and placing rumble strips according to Plan details and this Specification.

429.1.01 Definitions

General Provisions 101 through 150.

429.1.02 Related References

A. Standard Specifications

Section 400—Hot Mix Asphaltic Concrete

Section 413—Bituminous Tack Coat

B. Referenced Documents

General Provisions 101 through 150.

429.1.03 Submittals

General Provisions 101 through 150.

429.2 Materials

Ensure that asphaltic concrete conforms to Section 400, Types 12.5 mm Superpave, or 9.5 mm Superpave mixes.

Ensure that the tack coat conforms to Section 413.

429.2.01 Delivery, Storage, and Handling

General Provisions 101 through 150.

429.3 Construction Requirements

429.3.01 Personnel

General Provisions 101 through 150.

429.3.02 Equipment

A. Hand Rollers

Use nonvibrating hand rollers to compact the strips.

B. Forms

Ensure the form confines and spaces the hot mix according to the Plan details.

429.3.03 Preparation

General Provisions 101 through 150.

429.3.04 Fabrication

General Provisions 101 through 150.

429.3.05 Construction

Complete this procedure to install rumble strips:

1. Tack the entire 20 ft (6 m) strip length.

2. Place the oiled form, and ensure that the first strip coincides with the beginning of the first unit.
3. Place and level the plant mix. Roll the strips with the forms in place.
4. Remove the forms and compact the strips to the Engineer's satisfaction.
5. Repeat this operation to install the entire 20ft (6 m) rumble strip. Install additional units as designated on the Plans using the same methods and procedures.

NOTE: Do not place strips on wet or frozen pavement.

429.3.06 Quality Acceptance

General Provisions 101 through 150.

429.3.07 Contractor Warranty and Maintenance

General Provisions 101 through 150.

429.4 Measurement

Rumble strips are measured per each strip constructed.

429.4.01 Limits

General Provisions 101 through 150.

429.5 Payment

Rumble strips will be paid for per each strip completed and accepted. Payment is full compensation for furnishing materials and performing the work.

Payment will be made under:

Item No. 429	Rumble strips	Per each

429.5.01 Adjustments

General Provisions 101 through 150.

Section 430—Portland Cement Concrete Pavement

430.1 General Description

This work includes constructing pavement composed of Portland cement concrete, with or without reinforcement as specified, on a prepared subgrade or subbase course.

Follow the requirements of these Specifications and conform to the lines, grades, thicknesses, and cross sections shown on the Plans or by the Engineer.

430.1.01 Definitions

General Provisions 101 through 150.

430.1.02 Related References

A. Standard Specifications

Section 106—Control of Materials

Section 152—Field Laboratory Building

Section 431—Grind Concrete Pavement

Section 461—Sealing Roadway and Bridge Joints and Cracks

Section 500—Concrete Structures

Section 800—Coarse Aggregate

Section 801—Fine Aggregate

Section 830—Portland Cement

Section 831—Admixtures

Section 832—Curing Agents

Section 833—Joint Fillers and Sealers

Section 853—Reinforcement and Tensioning Steel

Section 880—Water

Section 886—Epoxy Resin Adhesives

B. Referenced Documents

AASHTO T 126

AASHTO T 97

AASHTO T 22

AASHTO T 23

ACI 214

ASTM C 94, Requirements for Uniformity

ASTM C 684, Method A

GDT 26

GDT 27

GDT 28

GDT 31

GDT 32

GDT 72

GDT 78

SOP 34

Report form, furnished by the Engineer

Requests for certification

430.1.03 Submittals

A. Profilograph Equipment and Operator Certification

Include in the Contract Unit Bid Price the cost to furnish and operate a Rainhart (Model 860) Profilograph to measure pavement profile deviations.

Before paving, ensure that the operator and the profilograph are certified by the Office of Materials in accordance with Standard Operating Procedure No. 34, Certification of Contractor Personnel and Equipment for Smoothness Testing of Portland Cement Concrete Pavement with the Rainhart Profilograph. Certification includes a mechanical check of the profilograph functions and a written examination by the operator.

Request certification in writing to the Office of Materials at least two weeks before it is needed.

B. Concrete Design

Submit for approval a concrete design that is prepared by a testing laboratory approved by the Office of Materials. The Contractor will transmit the design to the Engineer for approval at least 35 days before use.

C. Approval of Mix Design Proportions

Obtain approval from the Office of Materials for proposed concrete mix designs. Class 1 and 2 concrete mix designs will be verified for early compressive strength according to ASTM C-684, Method A. Class HES concrete mix designs will be verified for compressive strength development at 72 hours according to AASHTO T 126 and AASHTO T 22.

430.2 Materials

Ensure that materials meet the requirements of the following Specifications:

Material	Section
Portland cement	830.2.01
Portland Pozzolan cement	830.2.03
Water	880.2.01
Fine Aggregate, Size No. 10	801.2.02
Coarse Aggregate, Class A or B Crushed Stone or Gravel, Sizes as Specified	800.2.01
Steel Bars for Reinforcement	853.2.01
Steel Wire for Concrete Reinforcement	853.2.06
Welded Steel Wire Fabric for Concrete Reinforcement	853.2.07
Dowel Bars and Bar Coatings	853.2.08
Curing Agents	832
Air Entraining Admixtures	831.2.01
Fly Ash and Slag	831.2.03
Joint Fillers and Sealers	833
Low Modulus Silicone Sealant for Roadway Construction Joints	833.2.06
Epoxy Adhesive for Repairing Cracks	886.2.01
Chemical Admixtures	831.2.02

A. Fly Ash

Use fly ash, if appropriate, as a concrete additive to promote workability and plasticity. It may be used as a partial replacement for Portland cement in concrete, but follow these limits:

1. Do not replace the cement quantity more than 15 percent by weight.
2. Replace cement with fly ash at the rate of 1.25 to 2.0 lbs (1.25 to 2.0 kg) of fly ash to 1 lb (1.0 kg) of cement.
3. Ensure that the fly ash mix conforms to Subsection 430.3.06, “Quality Acceptance.”
4. Do not use Type IP cement in fly ash mixes.

B. Granulated Iron Blast-Furnace Slag

If high early strengths are not desired, use granulated slag as a partial replacement for Portland cement in concrete. Follow these limits:

1. Replace the quantity of cement 50 percent or less by weight if the 5-day forecast of the National Weather Service expects temperatures higher than 60 °F (15 °C).
   a. If the 5-day expected low temperature is less than 60 °F (15 °C) but not less than 40 °F (4 °C), replace the quantity of cement 30 percent or less by weight.
   b. If the 5-day expected low temperature is less than 40 °F (4 °C), do not use granulated slag.
2. Replace cement with slag at the rate of 1 lb (1 kg) of slag to 1 lb (1 kg) of cement.
3. Ensure that the granulated slag mix conforms to Subsection 430.3.06, "Quality Acceptance."
4. Do not use Type IP cement or fly ash in slag mixes.

C. Composition of Concrete

Design the concrete mix to conform to the following requirements:

1. Coarse Aggregate

   Use coarse aggregate size No. 467, 67, or 57 for plain Portland cement concrete pavement.

   Use size No. 67 or 57 coarse aggregate for continuous reinforced concrete pavement.

   Separate size No. 467 or 456 in individual stockpiles of size No. 4 and size No. 67. Blend according to approved mix proportions.
2. Fine Aggregate

   Use fine aggregate that meets the requirements for size No. 10.

   When using two sizes or sources of fine aggregate to produce the proper gradation, blend according to the approved design proportions.

D. Protective Materials

Provide materials to protect the concrete edges and surface from rain, including:

- Standard metal forms or wood planks to protect the pavement edges
- Covering material such as burlap or cotton mats, curing paper, or plastic sheeting material to protect the pavement surface

430.2.01 Delivery, Storage, and Handling

Store aggregate from different sources in separate stockpiles.

430.3 Construction Requirements

430.3.01 Personnel

A. Certified Operator

Before paving, have the Office of Materials, certify a profilograph equipment operator. Certification includes a written examination by the operator.

430.3.02 Equipment

A. Equipment Requirements

Provide equipment and tools to perform the work. Provide equipment that allows the paver to operate at a constant production rate and rarely start and stop. The Engineer may limit the production rate or batch size if equipment does not keep pace with the other operations or causes poor workmanship.

B. Scales

Before use, the Engineer will inspect and approve the scales to weigh concrete materials and the devices to measure water. Tolerances are ± 1.0 percent throughout the operating range. Measure admixtures to ± 3.0 percent.

C. Paving Equipment

Ensure that equipment operating on the pavement has rubber-tired wheels or flat steel wheels. Wait to operate concrete or shoulder paving equipment on the pavement until the concrete slab is 14 days old or has 2,500 psi (15 MPa) compressive strength.

Paving equipment may be either slip-form or fixed form.

D. Surface Finish Equipment

Use mechanical equipment to produce the surface finish of the mainline and transverse plastic concrete grooving. Ensure that the equipment uses rectangular-shaped steel tines of the same size and uniform length. Use tines with a width between 0.08 in (2 mm) and 0.130 in (3.5 mm). Space the tines approximately 1/2 in (13 mm) apart.

E. Field Laboratory

Provide a field laboratory according to Section 152.

F. Mechanical Sprayers

Provide fully atomizing spraying equipment with a tank agitator to place curing compounds.

430.3.03 Preparation

A. Prepare the Road Bed

Prepare the roadbed as required by the Plans and Specifications before placing concrete pavement.

B. Observe Condition of Subgrade and Subbase

Check the subgrade and subbase as follows:

1. Prepare the full width of the subgrade and subbase according to the Plans and Specifications.
2. Ensure that the surface immediately under the concrete pavement allows proper pavement thickness and yield.
3. Trim high areas to the proper elevation.
4. Ensure that the subbase can support paving equipment without rutting or bogging.

430.3.04 Fabrication

General Provisions 101 through 150.

430.3.05 Construction

A. Mix the Concrete

Produce Portland cement concrete by combining authorized proportions of materials in batches according to the construction methods in this Specification.

Mix the concrete produced in a stationary central mix plant for at least 60 seconds after all materials have entered the drum. Reduce the mix time if representative tests show that the concrete meets requirements of ASTM C 94, Requirements For Uniformity. Never reduce the mix time to less than 50 seconds.

B. Set Forms

Set the forms as follows:

1. Compact the foundation under the forms true to grade. Set the form so that it firmly contacts the foundation for the entire length at the specified grade.
2. Prevent the forms from settling or springing under the finishing machine.
3. Clean and oil the forms before placing the concrete.

C. Dowel Bars

Provide dowel bars at transverse joints unless otherwise noted in the Contract Plans.

D. Place Concrete

After depositing the concrete on the grade, avoid rehandling. Unload and place it as follows:

1. Unload the concrete into an approved spreading device and mechanically spread it on the grade.
2. Place the concrete continuously between transverse joints without using intermediate bulkheads.
3. Hand spread the concrete with shovels, not rakes.

NOTE: Do not allow personnel to walk in freshly mixed concrete with shoes coated with dirt or other materials.

4. Thoroughly consolidate the concrete against the faces of forms and along the full length and sides of joint assemblies.
5. Ensure that vibration does not cause puddling or grout accumulation on the surface.

   For construction or expansion joints, do not use grout that accumulates ahead of the paver.
6. Deposit concrete near the formed joints. Dump or discharge concrete only in the center of a joint assembly.
7. Take slab depth measurements as follows:
   a. Probe the plastic concrete behind the paver.
   b. Record the station number and depth measurements at least every 500 ft (150 m) at 3 random increments across the slab.
   c. Provide these measurements to the Engineer when requested.
8. Take air and slump determination tests at a rate of at least three of each test evenly distributed during the workday. Provide the results to the Engineer when requested.
9. Keep reinforcing steel free of dirt, oil, paint, grease, mill scale, and loose or thick rust that could impair the bond of the steel to the concrete.
10. Arrange operations to prevent “leave-outs” in continuous reinforced concrete pavement. The Engineer may approve “leave-outs” in emergencies if a Plan is approved to increase the reinforcement. The Department will not pay for extra leave-outs.

E. Place Reinforcement

Place reinforcement according to the Plans and as follows:

1. Do not insert lane tie bars in unsupported sides of fresh concrete.
2. Ensure that the steel placement method does not damage or disrupt concrete.
3. Use bent lane tie bars if needed in longitudinal formed joints construction. However, replace broken or damaged bars at no additional cost to the Department.

F. Construct the Ramps

Prevent pavement slab stress by constructing a ramp of compacted earth or other material for movement on and off the pavement. Do not allow equipment that exceeds legal load limits on the pavement.

G. Consolidate and Finish

Ensure that the sequence of operations is continuous from placement to final finish.

1. Consolidation

   Perform vibration for the full width and depth of the pavement as follows:

   a. Do not allow the vibrators to misalign load transfer devices, or to contact forms or base.

   b. Ensure that the vibrator amplitude is within the range recommended by the manufacturer.

      - Use spud vibrators with an adjustable operating frequency between 8,000 and 12,000 vibrations per minute.
      - Use surface pan vibrators with an adjustable operating frequency between 3,000 and 6,000 vibrations per minute.

   c. If appropriate, use surface vibrators and internal vibrators on concrete greater than 8 in (200 mm) thick.

   d. If appropriate, use surface vibrators exclusively on pavements less than 8 in (200 mm) thick.

   e. Stop vibration when the machine cannot go forward.

   f. Obtain uniform consolidation and density throughout the pavement.

      If it is not uniform, stop the operation and provide methods or equipment that will produce pavement that conforms to the Specifications.

2. Finishing

   After striking off and consolidating the concrete, follow these steps:

   a. Smooth and true the concrete using a float or finishing machine to minimize or eliminate hand finishing.

      Perform hand finishing only under the following conditions:

      - Irregular dimension areas where operating mechanical equipment is impractical
      - Mechanical equipment breakdown (only finish the concrete already deposited when the breakdown occurred)
      - Abnormal circumstances approved by the Engineer

   b. Ensure that the pavement surface final finish is true to grade, uniform in appearance, and free of irregular, rough, or porous areas.

   c. Prevent the surface within 6 in (150 mm) of the pavement edge to deviate more than 0.25 in (6 mm) in 10 ft (3 m) when tested with a 10 ft (3 m) straightedge in both transverse and longitudinal directions.

   d. Use mechanical equipment to produce a surface finish of transverse plastic concrete grooving for the mainline and ramps.

   e. Have the Engineer determine the texture depth by conducting pavement surface tests such as GDT 72 at selected locations.

   f. Transversely saw-groove mainline and ramp areas with a surface texture depth less than 0.018 in (0.5 mm). Meet the depth requirement of 0.035 in (0.9 mm) or greater.

      Perform saw-grooving to meet the following dimensions:

Width	1/8 in (3 mm)
Depth	3/16 in (5 mm)
Spacing	3/4 in (19 mm) center-to-center

   g. If required, use hand tools to texture ramps, acceleration lanes, and deceleration lanes to surface texture mainline requirements. Finish irregular sections to a surface texture of at least 0.025 in (0.64 mm) as shown in GDT 72.

3. Numbering Stations

   Cast station numbers with a die in the pavement every 500 ft (200 m) and 1 ft (300 mm) from the right edge of the travel lane.

4. Protection From Rain

Protect the unhardened concrete from rain. See Subsection 430.2.D, "Protective Materials."

When rain is imminent, stop paving operations and place forms against the sides of the pavement. Cover the surface of the unhardened concrete with the protective covering.

H. Remove Forms

Do not remove forms from freshly placed concrete until it has set for at least 12 hours, unless otherwise provided.

1. Remove forms carefully to avoid damaging the pavement.
2. After removing the forms, immediately cure the sides of the slab using the same method used to cure the pavement surface.
3. Remove and replace major honeycombed areas.

I. Work at Night

Provide adequate lighting for work performed at night. If lighting will not be provided at night, stop the concreting operation in time to finish and saw during daylight hours.

J. Provide Joints

Ensure that joints are designed, configured, and located as shown on the Plans or required by the Specifications.

1. Provide dowel bars at transverse joints unless otherwise noted.
2. Remove and replace plain concrete pavement that cracks during construction with no additional cost to the Department, at the Engineer's discretion.
3. When chipping out random cracks for sealing, use nonrigid epoxy on cracks that are not under expansion-contraction influence and that meet Subsection 886.2.01.
4. Seal continuous cracks that are under movement with sealant that meets Subsection 833.2.06.
5. When removing and replacing a pavement section, remove an area at least 6 ft (1.8 m) long and the full width of the lane.
   a. Saw to vertical face the sections to be removed and replace the concrete as a construction joint with dowels.
   b. Use deformed bars as dowels in the saw-cut construction joint. Use the size specified for contraction joints in the Plans.
6. Thoroughly clean the drilled holes of contaminants and set the dowels into the hardened concrete face of the existing pavement with a Type VIII epoxy bonding compound. See Section 886 for epoxy bonding requirements.
7. For contraction joints, use undamaged and properly positioned dowels in existing construction or slab replacement areas. Coat the protruding dowel portions with a thin film of heavy grease.
8. When both sides of an existing construction or contraction joint require slab replacements, replace slabs continuously from saw-cut construction joint to saw-cut construction joint. Use dowels specified for contraction joints.
9. Before placing concrete, uniformly apply a thin coat of heavy grease to epoxy-coated dowels.
10. When placing slabs continuously across transverse contraction joint locations, use saw-cuts to provide planes of weakness according to the requirements of this Specification and the standard drawing for contraction joints.

K. Types of Joints

1. Longitudinal Joints

   For longitudinal joints, use unpainted and uncoated deformed steel bars that are the size and length specified on the Plans.

   Place the bars perpendicular to the joint using a mechanical device, or rigidly secure the bars in place with supports.
2. Longitudinal Formed Joints

   Construct longitudinal formed joints while the concrete is in a plastic state.

   Use methods and equipment that locate the joint reinforcement properly without disrupting it during construction.

3. Longitudinal Sawed Joints

   Cut longitudinal sawed joints with a mechanical saw within three days after the concrete is placed and before traffic or equipment enters the pavement.

4. Transverse Joints

   Transverse joints consist of construction joints, contraction joints, or expansion joints constructed at required locations.

   a. Construct transverse joints in partial width or adjoining lanes to abut the same joint of adjacent lanes unless otherwise specified on the Plans.
   b. Ensure that transverse joints in plain Portland cement concrete requiring load transfer devices contain either plastic-coated or epoxy-coated dowels.
   c. Before placing concrete, secure dowel bars in place with supporting assemblies.
   d. Secure the assemblies in position on the subbase to keep the dowels from moving during concrete placement.
   e. Place dowel bars to a vertical and horizontal tolerance of plus or minus 1 in (25 mm) of the Plan position. Do not misalign the dowel bar more than 3/8 in per 1 ft (10 mm per 300 mm) in the horizontal or the vertical plane.
   f. Remove and replace dowel assemblies displaced from the Plan position more than the tolerances in Subsection 430.3.05.J.
   g. When using epoxy-coated dowels, coat the entire surface with a thin film of heavy waterproof grease.
   h. Ensure accurate positioning of transverse sawed joints by marking the position of dowel bar assembly locations.

5. Construction Joints

   Construct transverse construction joints when interrupting concreting operations for more than one hour.

   NOTE: Do not construct transverse construction joints within 10 ft (3 m) of an expansion joint, contraction joint, or transverse plane of weakness.

   a. Move an unanticipated construction joint back to the last Plan joint, if necessary. Remove and dispose of excess concrete.
   b. Form construction joints by securing in place a removable bulkhead or header board.
      1) Place the board so that it conforms to the full cross section of the pavement. Secure it flush with the subbase and parallel to the normal transverse joints.
      2) Slot or drill the board to allow placement of reinforcement as required by the Plans.

      NOTE: Do not use the roll of laitance and grout that forms in front of the paver adjacent to transverse construction joints.

   c. Consolidate to full width and depth concrete adjacent to transverse construction joints with mechanical hand-type spud vibrators. Keep one auxiliary vibrator available in case of mechanical malfunctions.
   d. Before applying the final finish to the concrete, stringline and correct variations of the concrete surface within 30 ft (9 m) on either side of the transverse construction joints. Provide equipment and tools such as:
      - Work bridges
      - Personnel
      - String lines
      - Straightedges
      - Lighting
   e. While the concrete is in a plastic condition, stringline the surface longitudinally and correct surface deviations greater than 1/8 in per 15 ft (3 mm per 4.6 m) in any direction.
   f. When using plain Portland cement concrete pavement, place dowel bars in construction joints. Cast half the length of each dowel bar in the concrete during each phase of joint construction.

g. When using epoxy coated dowels, coat the protruding half of each dowel bar with a thin film of heavy waterproof grease before resuming joint construction. Grease coating is not required on plastic coated dowels.

h. After the concrete has hardened, dismantle the bulkhead supporting the dowels. Do not disturb the dowels.

6. Contraction Joints

Create planes of weakness in plain Portland cement concrete pavement by cutting joints in the pavement surface. Create the planes according to the Plans as follows:

a. Saw transverse contraction joints before the pavement cracks. Begin sawing when the concrete has hardened enough to prevent surface raveling, usually 4 hours after placement, but no more than 24 hours.

b. Continue sawing day and night regardless of weather conditions.

7. Expansion Joints

Transverse expansion joints are required at locations shown on the Plans.

a. Form expansion joints by securing a removable bulkhead that conforms to the full cross section of the pavement. Use bulkheads that can construct a vertical expansion wall without offsets, indentations, or burrs.

b. Use expansion joint filler required by the Plans.

c. Furnish and install preformed joint filler in lengths equal to the pavement width or the width of one lane. Do not use damaged or repaired joint fillers.

d. Position the expansion joint filler vertically in the joint and at the proper grade. Use an installing bar or other device to secure the expansion joint filler at the proper grade and alignment.

L. Cure the Concrete

Immediately after finishing the concrete, cure the entire surface when the concrete will not mar. Use one or more of these methods:

1. Impervious Membrane Method

To use this method:

a. Spray the entire surface of the pavement with white pigmented curing compound immediately after finishing the surface and before the concrete has set.

If the pavement is cured initially with cotton mats, burlap, or cotton fabric, apply the compound after removing the mats.

NOTE: Do not apply curing compound during rain.

b. Use mechanical sprayers to apply curing compound under pressure at a minimum rate of 1 gal per 150 ft^2 (1 L per 3.5 m^2).

c. Thoroughly mix the compound with uniformly dispersed white pigments.

d. During application, use a mechanical device to stir the compound continuously.

e. Use a hand sprayer (if required) to spray odd widths, odd shapes, and concrete surfaces exposed by removing forms.

f. Do not apply curing compound to the inside faces of joints to be sealed.

g. If the membrane film becomes damaged within the curing period, repair the damaged portions immediately with additional compound.

2. White Polyethylene Sheeting

To use this method:

a. Cover the top surface and sides of the pavement with polyethylene sheeting. Lap the units at least 18 in (450 mm).

b. Place the sheeting and weigh it down so that it contacts the surface.

c. Extend the sheeting beyond the edges of the slab at least twice the thickness of the pavement.

d. Unless otherwise specified, maintain the covering in place for 72 hours after placing the concrete.

3. Burlap, Cotton Fabric, or Other Methods

   Contractors may cure the pavement with burlap, cotton fabrics, or other materials if the section remains wet for the duration specified by the Engineer.

4. Cold Weather Curing

   To use this method:

   a. Remove and replace concrete that freezes before the initial set time at no cost to the Department.
   b. Use polyethylene or canvas to protect concrete that has set but is exposed to freezing temperatures within 24 hours of placement. Ensure that the internal concrete temperature is above freezing for at least 24 hours after placing the concrete.
   c. Obtain approval from the Engineer to use other protection methods such as hay, straw, or grass, or to change the duration of the protection.

M. Seal the Joints

Clean and seal the joints according to Section 461 and the Plans.

Immediately after completing the curing period, fill in the joints with joint sealing material before opening the pavement to traffic.

During sealing, do not spill the material on the concrete surface. Immediately remove excess material on the concrete surface and clean the surface.

Do not use sand or similar material as a cover for the seal. Seal joints according to the Plans.

N. Open Pavement to Traffic

Wait to open the pavement slab to traffic, except for joint sawing vehicles, until the concrete is 14 days old unless representative compressive tests show that the slab has a compressive strength of 2,500 psi (15 MPa). Cure compressive test specimens used for traffic opening as near as possible to the roadway.

Protect the pavement against traffic from the public, employees, and agents.

1. Erect and maintain barricades. Employ watchmen to block traffic from the newly constructed pavement for the period required in this Specification.
2. Arrange the barriers away from public traffic on lanes remaining open.
3. Maintain signs that clearly indicate the lanes open to public traffic.
4. If traffic must go across the pavement, construct crossings satisfactory to the Engineer to bridge over the concrete. Construct the crossing without additional compensation.
5. Repair or replace pavement damaged by traffic or other causes before Final Acceptance without additional compensation. Make repairs to the Engineer’s satisfaction.

430.3.06 Quality Acceptance

The typical section sheet in the Plans gives specific uses for each concrete classification. Refer to this Specification for the minimum requirements of the concrete classifications for concrete design approval, concrete mix design proportions, batching control responsibilities, and acceptance of hardened concrete based upon compressive strength development.

A. Transit Mixed Concrete

Ensure that transit mixed concrete meets the requirements of Subsection 500.2, “Materials.”

B. Mix Design Criteria

Proportion concrete mix designs using the following requirements:

	Minimum Cement Content per Cubic Yard Concrete (CWT)	Max. Water-Cement Ratio (lbs/lb)	Design Air Content Range (%)
Class 1	5.41	0.53	4.0 to 5.5
Class 2	5.64	0.50	4.0 to 5.5
Class HES	6.58	0.47	4.0 to 5.5

	Minimum Cement Content per Cubic Meter Concrete (kg)	Maximum Water-Cement Ratio (kg/kg)	Design Air Content Range (%)
Class 1	320	0.53	4.0 to 5.5
Class 2	335	0.50	4.0 to 5.5
Class HES	390	0.47	4.0 to 5.5

Produce evidence that the mix design proportions for Class 1 and 2 concrete have strength development potential for 24 hours plus or minus 15 minutes and at 28 days as specified in Subsection 430.3.06.C, "Approval of Mix Design Proportions."

C. Approval of Mix Design Proportions

The Department will approve each proposed combination of materials and mix designs based on the use of approved materials, compliance with Subsection 430.3.06.B, "Mix Design Criteria," and the following:

1. Flexural Strength

   Prepare at least 9 normally cured flexural specimens and test according to AASHTO T 126 and T 97 to ensure that the demonstrated laboratory flexural design strength at 28 days meets the following minimum Design Acceptance Requirement (DAR).

NOTE: Take the 9 flexural specimens from 3 separate trial batches. Make 3 specimens from each batch.

Class No. 1	Concrete DAR = 600 psi + .67 s Concrete DAR = 4.1 MPa + .67 s
Class No. 2	Concrete DAR = 700 psi + .50 s Concrete DAR = 4.8 MPa + .50 s
Class HES	Concrete DAR = 700 psi + .50 s Concrete DAR = 4.8 MPa + .50 s
s = a standard deviation of all 28-day flexural specimens for a given combination of materials and mix proportions prepared together. Do not use a value of "s" greater than 37 psi (255 kPa) to calculate DAR.	

2. Compressive Strength

   Prepare and test at least 6 cylinders according to AASHTO T 126 and T 22 to ensure that the demonstrated laboratory compressive strength at 28 days for Class 1 and 2 concrete exceeds the minimum Job Performance Value (JPV).

   Produce similar evidence that demonstrates strength development at 72 hours for Class HES concrete.

Class 1	Concrete JPV Minimum = 3,000 psi + .18 R Concrete JPV Minimum = 20 MPa + .18 R

Class 2	Concrete JPV Minimum = 3,500 psi + .21 R Concrete JPV Minimum = 25 MPa + .21 R
Class HES	Concrete JPV Minimum = 3,000 psi + .05 R Concrete JPV Minimum = 20 MPa + .05 R
R = the difference between the largest observed value and the smallest observed value for all compressive strength specimens at 28 days for a combination of materials and mix proportions prepared together.	

a. Class 1 and 2 Concrete

1) Submit early compressive strength test results made at 24 hours plus or minus 30 minutes for at least 12 cylinders. Prepare and test according to ASTM C 684, Method A.

2) Prepare cylinders from three separate trial batches, and make four specimens from each batch.

3) Determine the average strength, standard deviation, and coefficient of variation for the design according to ACI 214. Do not use designs that produce a coefficient variation greater than 10 percent.

b. Class HES Concrete

Submit evidence that designs proposed for use as Class HES concrete have compressive strength development potential at 72 hours of 3,000 psi (20 MPa) plus .05 R.

D. Field Adjustments on Concrete Mixes

Determine the aggregate surface moisture and apply free moisture corrections to the approved mix design. The Engineer will verify that the corrections are made properly.

Adjust the approved proportions of the fine and coarse aggregate and water as desired, provided:

1. The cement factor is not decreased.
2. The water-cement ratio is not increased.
3. Adjustments produce concrete proportions according to this Specification.
4. The Engineer is notified before use.

E. Concrete Mix Tolerances

Keep concrete consistency and air content to vary within the following limits:

1. Consistency

Immediately before placement, use GDT 27 to determine concrete slump. Do not use concrete for Portland cement concrete pavement with a slump value greater than 2.5 in (65 mm).

2. Air Content

Immediately before placement, use GDT 26, GDT 28, or GDT 32 to determine the air content of the concrete. Concrete will not be accepted that has an air content outside of these limits:

Lower acceptance limit	3.0%
Upper acceptance limit	6.5%

F. Concrete Strength Acceptance

The concrete strength of Portland cement concrete pavement is accepted based upon the compressive strength development at a specific time.

Strength development is determined by a lot acceptance plan. The pavement is subdivided into separate concrete lots of approximately 5,334 yd^2 (4400 m^2) placed continuously, except for required work stoppages.

1. Ramps

Ramps may be set apart as individual lots. Include acceleration or deceleration lanes, wedges, or other varied width sections in other lots if the total paving quantity is not greater than 7,500 yd^2 (6300 m^2). The Engineer will randomly select three production units from each lot for strength determination tests.

2. Class 1 and 2 Concrete
   a. Cast at least two cylinder sets for each production unit selected for acceptance testing. A set is two 6 by 12 in (150 by 300 mm) cylinders. Cure one set according to ASTM C-684, Method A. Cure the other set according to AASHTO T 23.
   b. After curing, test each concrete cylinder according to AASHTO T 22. The test result is the average strength of the two cylinders.
3. Acceptance Based on 24-Hour Strength

   Concrete may be accepted by early strength determinations. However, concrete will not be accepted based on early strength development when the difference between the largest observed strength value and the smallest observed strength value exceeds 35 percent of the average.
   a. Compute the average (X) and the range (R) from the three acceptance tests results.
   b. Have the Engineer establish the minimum early strength (S) to be used for concrete acceptance.

      The minimum early acceptance strength is the average strength at 24 hours plus or minus 30 minutes of the laboratory design less 1.5 times the standard deviation of the laboratory design.
   c. If the average (X) of the three lot acceptance tests equal or exceed the value (S), the lot will be accepted at the full contract price, and 28 day cylinders for this lot can be discarded.
   d. If the average of the three lot acceptance tests fails to meet the acceptance limit, the Engineer will contact the Contractor immediately. The Contractor may immediately remove the concrete in the lot or leave it in place pending acceptance or rejection from the 28-day strength test results.
4. Acceptance Based on 28-Day Strength Tests

   When a lot is potentially defective based on the early strength determinations and the Contractor leaves the lot in place to be judged by the 28-day strength tests results, retain and cure all 3 sets of 28-day cylinders.
   a. If the average 28-day strength of the lot does not meet the lower acceptance limit for a 0.70 pay factor, the Engineer may either:
      - Order removal of the concrete in the lot
      - Apply a pay factor of 0.50 for the lot
   b. The Unit Price of concrete pavement will be reduced for areas represented by each lot that does not meet the specified compressive strength at 28 days according to the following schedule:

Pay Factor Schedule for Strength Determinations at 28 Days			
Acceptance Limits for Pay Factor Levels			
	1.00 LAL*	**0.95 LAL**	**0.70 LAL**
Concrete Class 1	3,000 psi (20 MPa) + 0.18 R	3,000 psi (20 MPa) - 0.07 R	3,000 psi(20 MPa)- 0.30 R
Concrete Class 2	3,500 psi (25 MPa)+ 0.21 R	3,500 psi (25 MPa)- 0.07 R	3,500 psi (25 MPa)-0.30 R
* Lower acceptance limit (LAL)			

5. Classification HES Concrete

   Cast at least two sets of cylinders for each production unit selected for acceptance testing.
   a. Cure one set for 72 hours under conditions similar to those under which the pavement is cured. Cure the other set of cylinders for 28 days according to AASHTO T 23.
   b. Test each cylinder according to AASHTO T 22 when the specified curing is complete. The test results are the average strength of the two cylinders.
   c. The Engineer may accept the concrete at full contract price if the average of the three 72-hour test results exceeds the JPV established in Subsection 430.3.06.C.

d. When the 72-hour strength tests determine that a lot is potentially defective, the Engineer will immediately notify the Contractor. At this time, the Engineer may require the immediate removal of the pavement in question.

If the Engineer does not require immediate removal of the pavement, select removal or acceptance on the basis of the 28-day strength development.

e. When the 72-hour strength tests determine that a lot is potentially defective and the concrete is retained for subsequent judgment, conduct acceptance tests at 28 days on selected cylinders cured according to AASHTO T 23.

Questionable lots will be accepted based on the 28-day strength and provisions for testing, computations, and payment for Classification No. 2 concrete in Subsection 430.3.06.F.2, "Class 1 and 2 Concrete."

G. Smoothness

Pavement smoothness will be accepted only after the Engineer determines that the work was performed according to this and other Specifications. The completed pavement, including corrective work, must meet the applicable profile index value requirements.

Perform smoothness testing as follows:

1. Ensure that the mainline riding surface produces a profile index value no greater than 7 in/mile (100 mm/ km) on each travel lane. Conduct tests according to GDT 78.
2. Determine a profile index value for each tracing for each 0.25 mile (0.5 km) segment. Correct individual bumps or depressions that exceed the blanking band by more than 0.2 in (5 mm) at no additional expense to the Department.
3. If a paving operation exceeds a profile index value of 7 in/mile (100 mm/km) per lane for any segment, suspend the paving operation and take corrective action approved by the Engineer.
4. Use GDT 78 to test ramps and acceleration and deceleration lanes to attain an average profile index value no greater than 12 in/mile (200 mm/km) by Rainhart Profilograph for the entire section length. Correct individual bumps or depressions that exceed 0.2 in (5 mm) from the blanking band at no additional expense to the Department.
5. Take pavement profiles that are 4 ft (1.2 m) away from and parallel to the new pavement edges on pavements greater than 16 ft(4.8 m) wide and up to 24 ft (7.2 m) wide.

   Test pavement 6 to 16 ft (1.8 to 4.8 m) wide parallel to and at the center line of the pavement section.
6. Begin the 0.25 mile (0.5 km) record segments at the first day's placement and continue until Project completion, except as noted in this Specification.
7. Combine pavement sections less than 700 ft (200 m) long that approach a bridge. Use the previous 0.25 mile (0.5 km) segment to determine the profile index.

   Calculate as a separate record segment 700 ft (200 m) sections or greater that approach a bridge. This exception applies also to sections at Project limits.
8. Determine a separate profile index value using GDT 78 for the 100 ft (30 m) of roadway approaching each end of a bridge up to and including the joint with the approach slab.

   Average the profile index from the right and left wheelpaths for each 100 ft (30 m) segment for each lane for each approach. The average profile index value shall not exceed 30 in/mile (500 mm/km).
9. Before paving farther, perform and evaluate profiles from the first day's placement.
   a. After completing and evaluating this test run, adjust equipment as required by the Engineer to improve smoothness before paving continues.
   b. Complete the report form furnished by the Engineer and attach to the profilograph tracings of each day. Include the following information in each trace:
      - Project number
      - Beginning and ending station numbers
      - 500 ft (150 m) paving stations
      - Traffic direction

- Lane number
- Date paved and tested
- Construction joint locations

Have the certified profilograph operator obtain and evaluate the traces and submit the evaluation to the Engineer. Provide results no later than the end of the second work day following placement.

10. For mainline pavement, correct 0.25 mile (0.5 km) segments not meeting the profile index requirement using one of these methods:
    a. Grind the entire lane surface of the 0.25 mile (0.5 km) segment to a profile index value less than 7 in/mile (100 mm/km). Use equipment that meets requirements in Section 431.
    b. Grind roughness in small segment areas no more than 50 ft (15 m) of full lane width to produce a profile index value no greater than 7 in/mile (100 mm/km).

       If more than 50 ft (15 m) of grinding is required, grind the complete 0.25 mile (0.5 km) segment according to Method a, above.
11. Correct ramps and acceleration and deceleration lanes that do not meet the profile index requirement to a profile index no greater than 12 in/mile (200 mm/km). Prevent individual bumps from exceeding 0.2 in (5 mm) from the blanking band. Use equipment specified in Section 431.
12. Correct 100 ft (30 m) bridge approach sections that do not meet the profile index requirement.
    a. Grind according to Section 431.
    b. If appropriate, use a bump grinder to correct bumps with a baseline of 5 ft (1.5 m) or less.
    c. Grind the full lane width even when grinding including individual bumps.
    d. Retest pavement segments containing corrective slab replacements for Final Acceptance.
13. Correct segments that do not meet the profile index criteria of this Specification at no additional expense to the Department. Retest segments after correction with the Rainhart Profilograph.
14. Notify the Engineer before profile testing. The Engineer will verify the results by randomly selecting a minimum of 1 out of every 10 consecutive record segment profiles to compute the profile index and to compare with Contractor results.

    The Engineer may conduct profilograph tests at any time to verify Contractor results. The Department may test record segments if the Engineer determines that the Contractor test results are inaccurate. See Subsection 430.5.01, "Adjustments."

H. Thickness

The Engineer shall determine the pavement thickness using average core measurements tested according to GDT 31.

The following table contains units for paving widths:

Paving Widths – Feet (meters)	Length of Unit (Bridges Excluded)—Feet (meters)
0 – 24.0 (0 – 7.2)	1000 (300)
24.1 – 36.0 (7.2 – 10.8)	750 (225)
36.1 – 48.0 (10.8 – 14.4)	500 (150)

Areas of equal depth in intersections, entrances, crossovers, ramps, etc. are considered one unit, and the thickness of each unit is determined separately. If appropriate, include small irregular areas as part of another unit.

1. Take one core for each 2,000 yd^2 (1675 m^2) of pavement, or fraction of pavement, in each unit where the Engineer selects.

   The Department will take one core at random in each unit.
   a. When the core measurement is deficient 0.2 in (5 mm) or less from the Plan thickness, full payment is made.
   b. When the measurement is deficient more than 0.2 in (5 mm) and not more than 1 in (25 mm) from the plan thickness, two additional cores are secured from the unit and used to determine the average thickness.

c. A random selection process determines where to secure additional cores. However, do not secure cores within 50 ft (15 m) of other thickness measurement cores. The adjusted Unit Price in Subsection 430.5.01.A, "Concrete Pavement Thickness Deficiency" is used to determine payment for the unit.

2. Consider pavement more than 0.2 in (5 mm) thicker than the specified thickness to be the specified thickness plus 0.2 in (5 mm). Measurements more than 1 in (25 mm) less than the specified thickness are not included in the average.
3. When the core measurement is at least 1 in (25 mm) less than the specified thickness:
   a. Determine the pavement thickness in the affected location by taking additional cores at no less than 10 ft (3 m) intervals parallel to the center line in each direction.
   b. Continue until a core is found that is not deficient by more than 1 in (25 mm).
   c. Have the Engineer evaluate areas more than 1 in (25 mm) deficient in thickness. Remove deficient areas and replace with concrete pavement of the thickness shown on the Plans, if the Engineer requires.

   Exploratory cores for deficient thickness are not used in averages for adjusted Unit Price.

430.3.07 Contractor Warranty and Maintenance

General Provisions 101 through 150.

430.4 Measurement

The area that will be paid for under this Item is the number of square yards (meters) of concrete pavement accepted as measured complete in place. The pavement width measured is shown on the typical cross section of the Plans, including additional widening as required or widening directed in writing by the Engineer.

The length is measured along the pavement surface.

Work is accepted lot-to-lot according to Section 106 and this Specification.

430.4.01 Limits

General Provisions 101 through 150.

430.5 Payment

Concrete pavement completed and accepted that meets the Specification requirements will be paid for at the full Contract Unit Price per square yard (meter).

Payment for other accepted concrete pavement will be based on an adjusted Unit Price per square yard (meter). This price will be adjusted for payment for concrete pavement accepted but deficient in depth or compressive strength at 28 days. Price adjustments are specified in Subsection 430.5.01, "Adjustments."

No additional payment over the Contract Unit Price will be made for pavement units with an average thickness greater than on the Plans. No additional payment over the Contract Unit Price will be made for a lot of concrete that develops more strength at 28 days than the compressive strength established in Subsection 430.3.06.F, "Concrete Strength Acceptance."

Payment is full compensation for furnishing and placing materials, reinforcements, dowel and joint materials, supplies, and incidentals to complete the work.

Payment will be made under:

Item No. 430	Plain Portland cement concrete pavement, class no. 1 concrete _____ in (mm) thick	Per square yard (meter)
Item No. 430	Plain Portland cement concrete pavement class no. 2 concrete _____ in (mm) thick	Per square yard (meter)
Item No. 430	Plain Portland cement concrete pavement, class HES concrete _____ in (mm) thick	Per square yard (meter)
Item No. 430	Continuously reinforced concrete pavement, class no. 1 concrete _____ in (mm) thick	Per square yard (meter)

Item No. 430	Continuously reinforced concrete pavement, class no. 2 concrete _____ in (mm) thick	Per square yard (meter)
Item No. 430	Continuously reinforced concrete pavement, class HES concrete _____ in (mm) thick	Per square yard (meter)

430.5.01 Adjustments

The Contract Unit Price per square yard (meter) of concrete pavement will be adjusted for concrete pavement accepted but deficient in thickness or compressive strength at 28 days. Adjusted Unit Prices per square yard (meter) of concrete pavement are based on one or both of the following conditions:

A. Concrete Pavement Thickness Deficiency

1. If the core is deficient 0.2 in (5 mm) or less from the Plan thickness, full payment will be made. If the core is deficient in thickness more than 0.2 in (5 mm), but not more than 1 in (25 mm) from the Plan thickness, 2 additional cores will be taken from the area.
   a. If the average measurement of these 3 cores is deficient 0.2 in (5 mm) or less from the Plan thickness, full payment will be made.
   b. Where the average pavement thickness is deficient by more than 0.2 in (5 mm), but not more than 1 in (25 mm), payment will be made at a portion of the Unit Price per square yard (meter) of concrete pavement as shown in the following table:

Concrete Pavement Deficiency	
Deficiency in Thickness Determined by Cores– in (mm)	**Proportional Part of Contract Price Allowed**
0.0 through 0.20 (0.0 through 5.0)	100 percent
0.21 through 0.25 (5.1 through 6.4)	95 percent
0.26 through 0.30 (6.5 through 7.6)	91 percent
0.31-0.40 (7.7 through 10.0)	86 percent
0.41-0.50 (10.1 through 12.8)	80 percent
0.51-0.75 (12.9 through 19.2)	70 percent
0.76-1.00 (19.3 through 25.0)	60 percent

   c. When the thickness of pavement is deficient by more than 1 in (25 mm) and the Engineer determines that the deficient area should not be removed or replaced, 50 percent of the Contract Unit Price will be paid.
2. No payment or compensation for cost will be made for removing concrete according to this provision.

B. Compressive Strength Deficiency

When the compressive strength at 28 days, expressed as an average strength (X) for a lot of concrete pavement is less than the values established by the Pay Factor Table, payment will be made at a reduced Unit Price per square yard (meter) as shown in the Pay Factor Table.

C. Combined Deficiencies

When a pavement section is deficient in thickness and compressive strength, the Contract Unit Price will be adjusted by the total reduction from applying the percentages in Subsections 430.5.01.A and Subsection 430.5.01.B, above.

For combined deficiencies of 50 percent or more, the Engineer may leave the pavement in place at the combined payment reduction or order the deficient areas removed and replaced at no additional cost to the Department.

If the Engineer orders removal of the pavement, payment will not be made for the original pavement or removal. Pavement replaced will be paid for at the appropriate Unit Price.

D. Profilograph Testing

If, based on the Department's profilograph tests, the Engineer determines that the Contractor profilograph test results are inaccurate, the Contractor will be charged for profilograph testing at $500 for each trace mile ($250 for each trace kilometer), with a minimum charge of $500.

Section 431—Grind Concrete Pavement

431.1 General Description

This work includes grinding existing Portland cement concrete pavement to eliminate joint faulting or to restore proper drainage and riding characteristics to the pavement surface. Perform the work according to these Specifications and the Plans.

431.1.01 Definitions

General Provisions 101 through 150.

431.1.02 Related References

A. Standard Specifications

General Provisions 101 through 150.

B. Referenced Documents

GDT 78

GDT 126

431.1.03 Submittals

General Provisions 101 through 150.

431.2 Materials

General Provisions 101 through 150.

431.2.01 Delivery, Storage, and Handling

General Provisions 101 through 150.

431.3 Construction Requirements

431.3.01 Personnel

General Provisions 101 through 150.

431.3.02 Equipment

A. Grinding Equipment

Use power driven, self-propelled grinding equipment with these characteristics:

- Diamond blades designed to smooth and texture Portland Cement concrete pavement
- Effective wheel base of at least 12 ft (3.6 m)
- Pivoting tandem bogey wheels at the front of the machine
- Rear wheels arranged to travel in the track of the freshly cut pavement
- Grinding head with the center no further than 3 ft (900 mm) forward from the center of the back wheels

Ensure that the equipment:

- Cuts or planes at least 3 ft (900 mm) wide
- Operates without encroaching on traffic movement outside the work area
- Grinds the surface without causing spalls at cracks, joints, or other locations

Periodically check the equipment to ensure that it is in proper working order, especially the wheel "roundness" on the grinding equipment. Immediately correct "out-of-round" wheels.

B. Rainhart Profilograph

Use the Rainhart Profilograph to test ground pavement surfaces on ramps, acceleration and deceleration lanes, and other areas not suitable for testing with the Road Profiler for Pavement Profile Index value.

431.3.03 Preparation

Complete spall repairs, slab replacements, and pressure grouting in the area to be ground before beginning grinding operations.

431.3.04 Fabrication

General Provisions 101 through 150.

431.3.05 Construction

Grind the pavement surface areas designated on the Plans. Only grind bridge decks and roadway shoulders when they are indicated on the Plans, required to promote drainage, or required to conform to smoothness requirements if the work is new construction or bridge decks.

Grind the surface areas as follows:

1. Schedule the construction operation to produce a uniform finished surface.
2. Maintain a constant cross slope between grinding extremities in each lane to ensure that grinding provides positive lateral drainage.
3. Transition auxiliary or ramp lane grinding from the mainline edge and at the end of the cut to provide positive drainage and acceptable riding surface.
4. Grind the entire area designated on the Plans until the pavement surfaces of the adjacent sides of transverse joints and cracks are in the same plane.
5. Eliminate the faulting at joints and cracks, and ensure that the overall riding characteristics are within the limits specified.
6. Texture the pavement surface, but do not grind extra depth to eliminate minor depressions.
7. Remove grinding residue before it is blown by traffic action or wind. Do not allow residue to flow into gutters, drainage facilities, or across lanes used by public traffic.
8. Ensure that the operation produces pavement that conforms to the typical cross section and requirements in Subsection 431.3.06, "Quality Acceptance."

431.3.06 Quality Acceptance

Produce a pavement surface that is true to grade and uniform with a longitudinal line-type texture.

A. Texture

Ensure that the line-type texture contains corrugations that are parallel to the outside pavement edge and have a narrow ridge corduroy-type appearance.

B. Grooves

Ensure that the peaks of the ridges are 1/16 in, ± 1/32 in (1.6 mm, ± 0.8 mm) higher than the bottoms of the grooves with 57 to 60 (185 to 200) evenly spaced grooves per foot (meter). Select the number of grooves per foot (meter) to produce the surface finish for each aggregate type that is in the concrete surface on the project. Groove spacing that does not meet the specified surface finish will not be accepted.

C. Finished Pavement Surface

Correct deficiencies in the final surface finish from improper operation or equipment at no expense to the Department. This includes, but is not limited to:

- Pavement corrugation due to “out of round” wheels on grinding equipment
- Improper cutting head operations that cause the head to ride in and out of the pavement when encountering light and heavy cuts
- Depressions created from improper starting and stopping during the cutting operation
- Unground ridges left in the pavement from defective blades in the grinding head

Closely check the ground pavement surface during grinding, and take corrective action if any of the above deficiencies occur. The finished pavement surface will be measured for riding quality using the Laser Road Profiler according to test procedure GDT 126.

Follow these requirements to ensure that the grinding produces an acceptable riding surface:

1. Ensure that the ground pavement surfaces on the mainline meet a pavement ride index value not exceeding 900 on each 0.25 mile segment (0.5 km segment) for each vehicle lane.
2. Conduct tests according to GDT 126. Calculate and report smoothness values for each 0.25 mile (0.5 km) section of each vehicle lane.
3. Regrind areas that do not meet the smoothness requirements at no additional cost to the Department.

D. Regrinding

To regrind areas to meet the smoothness or final surface finish:

1. Regrind the entire lane width in the area to be corrected. Regrind of just a portion of the lane width will not be permitted
2. Perform spot regrinding on moderate to major deviations throughout the deficient 0.25 mile (0.5 km) section of the lane to meet the smoothness and final surface finish requirements. Spot regrinding of just the largest deviations of a portion of the deficient 0.25 mile (0.5 km) lane section will not be permitted.

The Engineer may require profilograph traces before regrinding to locate deviations within a failed area. The Department will perform profilograph testing according to GDT 78. Provide traffic control for profilograph testing at no cost to the Department.

The Engineer may require profilograph testing of ground surfaces on the mainline that meet the smoothness requirements. Testing will be performed according to GDT 78 to isolate locations with individual bumps or depressions greater than 0.20 in (5 mm) outside the blanking band. Perform corrective grinding to eliminate these bumps or depressions at no additional cost to the Department.

Ensure that the Pavement Profile Index value readings on ramps, acceleration and deceleration lanes, and other areas not suitable for Road Profiler testing do not exceed 7 in/mile (100 mm/km) when tested in accordance with GDT 78. If they are exceeded:

- Regrind the areas that exceed this value at no additional cost to the Department.
- Regrind individual bumps or depressions greater than 0.20 in (5 mm) outside the blanking band on the profilograph trace at no additional cost to the Department.

Inspect transverse joints and random cracks to ensure that adjacent surfaces are in the same plane. Grind surface misalignments greater than 1/16 in (2 mm) of the surface planes on adjacent sides of the joints or cracks until the surfaces are flush.

E. Pavement Transverse Slope

Ensure that the pavement transverse slope is uniform and that depressions or slope misalignments are not greater than 1/8 in. in 12 ft (3 mm in 3.6 m) when tested with a straightedge placed perpendicular to the centerline.

1. Minimize vertical alignment mismatches between adjacent cuts, 1/16 in (2 mm) maximum.

2. Check the transverse slope closely as the work progresses. Correct mismatches immediately.
3. If one or more lanes are not to be ground, ensure that the vertical interface edge between the ground and unground lanes is not misaligned more than 1/8 in. (3 mm).

   Feather the cut from the ground lanes into the unground lanes to meet this requirement.

431.3.07 Contractor Warranty and Maintenance

General Provisions 101 through 150.

431.4 Measurement

Pavement grinding on existing pavements is measured by the square yard (meter). Determine the quantity of pavement grinding by multiplying the finished ground width by the total length ground.

431.4.01 Limits

General Provisions 101 through 150.

431.5 Payment

The Contract Price per square yard (meter) for grinding concrete pavement is full compensation for furnishing labor, materials, tools, equipment, and incidentals grinding the existing surface, removing residue, and cleaning the pavement according to these Specifications and as shown on the Plans.

Payment will be made under:

Item No. 431	Grind concrete pavement	Per square yard (meter)

431.5.01 Adjustments

General Provisions 101 through 150.

Section 432—Mill Asphaltic Concrete Pavement

432.1 General Description

This work includes milling existing asphaltic concrete pavement to restore proper grade and/or transverse slope, removing structurally unsound material, providing clearance for overlay in curb and gutter sections, or other purposes deemed necessary due to existing conditions. Perform the work according to these Specifications and Plan details.

432.1.01 Definitions

General Provisions 101 through 150.

432.1.02 Related References

A. Standard Specifications

Section 109—Measurement and Payment

B. Referenced Documents

GDT 126

432.1.03 Submittals

General Provisions 101 through 150.

432.2 Materials

432.2.01 Delivery, Storage, and Handling

When specified, stockpile the milled material at locations shown on the Plans.

1. Uniformly stockpile the materials approximately 6 – 8 ft (1.8 – 2.4 m) high.
2. Maintain the existing drainage pattern of water from the stockpile storage area.
3. Dress the reclaimed asphalt area to drain rainwater from the material.
4. Obtain the Engineer's approval of the stockpile locations and the method used to prevent milled material degradation, segregation, and reconsolidation.

432.3 Construction Requirements

432.3.01 Personnel

General Provisions 101 through 150.

432.3.02 Equipment

A. Milling Equipment

Use power-driven, self-propelled milling equipment that is the size and shape that allows traffic to pass safely through areas adjacent to the work. Also, use equipment that is:

- Designed to mill and remove a specified depth of existing asphalt paving
- Equipped with grade and slope controls operating from a stringline or ski and based on mechanical or sonic operation
- Capable of removing pavement to an accuracy of 1/8 in (3 mm)
- Furnished with a lighting system for night work, as necessary
- Provided with conveyors capable of side, rear, or front loading to transfer the milled material from the roadway to a truck

B. Dust Control

Provide power brooms, vacuum sweepers, power blowers, or other means to remove loose debris or dust. Do not allow dust control to restrict visibility of passing traffic or to disrupt adjacent property owners.

432.3.03 Preparation

General Provisions 101 through 150.

432.3.04 Fabrication

General Provisions 101 through 150.

432.3.05 Construction

A. Milling Operation

Follow the Plans to mill the designated areas and depths including bridge decks, shoulders, and ramps, as required. Ensure the following requirements are met:

1. Schedule the construction operation. Use milling methods that will produce a uniform finished surface and maintain a constant cross slope between extremities in each lane.
2. Provide positive drainage to prevent water accumulation on the milled pavement, as shown on the Plans or directed by the Engineer.

3. Bevel back the longitudinal vertical edges greater than 2 in (50 mm) that are produced by the removal process and left exposed to traffic. Bevel them back at least 3 in for each 2 in (75 mm for each 50 mm) of material removed. Use an attached mold board or other approved method.
4. When removing material at ramp areas and ends of milled sections, taper the transverse edges 10 ft (3 m) to avoid creating a traffic hazard and to produce a smooth surface.
5. Protect with a temporary asphaltic concrete tie-in (paper joint) vertical edges at other areas such as bridge approach slabs, drainage structures, and utility apputenance greater than 1/2 in that are left open to transversing vehicles. Place the temporary tie-in at taper rate of at least 6 to 1 horizontal to vertical distance.
6. Remove dust, residue, and loose milled material from the milled surface. Do not allow traffic on the milled surface and do not place asphaltic concrete on the milled surface until removal is complete.

The reclaimed asphaltic pavement becomes the Contractor's property unless otherwise specified.

432.3.06 Quality Acceptance

Ensure that the milling operation produces a uniform pavement texture that is true to line, grade, and cross section.

Milled pavement surface acceptance testing will be performed using the Laser Road Profiler method in GDT 126. Milled pavement will be evaluated on individual test sections, normally 1 mile (1 km) long.

When the milled surface is to be left as the final wearing surface, ensure that indices do not exceed:

- 1025 on milled pavement surfaces on interstates when the milled surface will be the final wearing surface
- 1175 for other on-system routes when the milled surface will be the final wearing surface
- 1175 on Interstates and 1325 for other on-system routes if the milled surface will be overlaid

Remill mile (kilometer) areas to meet the specified limits when the indices are exceeded. Remill at no additional cost to the Department.

Milled pavement surfaces are subject to visual and straightedge inspection. Keep a 10 ft (3 m) straightedge near the milling operation to measure surface irregularities of the milled pavement surface. Remill irregularities greater than 1/8 in per 10 ft (3 mm in 3 m) at no additional cost to the Department.

Ensure that the cross slope is uniform and that no depressions or slope misalignments greater than 1/4 in per 12 ft (6 mm in 3.6 m) exist when the slope is tested with a straightedge placed perpendicular to the center line.

432.3.07 Contractor Warranty and Maintenance

General Provisions 101 through 150.

432.4 Measurement

Milling existing asphaltic concrete pavement is measured by the square yard (meter) as described in Subsection 109.01, "Measurement and Quantities."

432.4.01 Limits

General Provisions 101 through 150.

432.5 Payment

Milling asphaltic concrete pavement, measured as specified, will be paid for at the Contract Unit Price bid per square yard (meter). The price bid for this item includes the credit value of all Reclaimed Asphalt Pavement (RAP) recovered, and no adjustment in the unit price for this item or other items will be considered for variations in the amount of RAP actually recovered.

Payment is full compensation for furnishing equipment, milling, hauling, stockpiling milled material, and satisfactorily performing the work.

Payment will be made under:

Item No. 432	Mill asphaltic concrete pavement, ___ in (mm) depth	Per square yard (meter)
Item No. 432	Mill asphaltic concrete pavement, variable depth	Per square yard (meter)

432.5.01 Adjustments

General Provisions 101 through 150.

Section 433—Reinforced Concrete Approach Slabs

433.1 General Description

This work includes building reinforced concrete approach slabs for bridges on completed and accepted subgrades.

433.1.01 Definitions

General Provisions 101 through 150.

433.1.02 Related References

A. Standard Specifications

Section 430—Portland Cement Concrete Pavement

Section 441—Miscellaneous Concrete

Section 500—Concrete Structures

Section 511—Reinforcement Steel

Section 621—Concrete Barrier

Section 853—Reinforcement and Tensioning Steel

B. Referenced Documents

General Provisions 101 through 150.

433.1.03 Submittals

General Provisions 101 through 150.

433.2 Materials

Ensure that materials meet these requirements:

A. Concrete

Use concrete specified as Class A concrete (see Section 500) or pavement concrete (see Section 430).

B. Steel Bars for Concrete Reinforcement

See Subsection 853.2.01.

C. Forms

Use steel or wood forms that meet the requirements of Section 430 or Section 500.

D. Concrete and Reinforcement Steel

Ensure that concrete for approach slabs is proportioned, mixed, placed, and cured according to Section 430 or that it meets the requirements for Class A concrete (Section 500).

Place reinforcement steel according to Section 511.

433.2.01 Delivery, Storage, and Handling

General Provisions 101 through 150.

433.3 Construction Requirements

433.3.01 Personnel

General Provisions 101 through 150.

433.3.02 Equipment

General Provisions 101 through 150.

433.3.03 Preparation

General Provisions 101 through 150.

433.3.04 Fabrication

General Provisions 101 through 150.

433.3.05 Construction

Construct the approach slab before placing the adjacent roadway paving, unless otherwise specified in the Plans.

A. Approach Slabs

Finish, cure, and protect the approach slabs as specified in Subsection 500.3.05.Q, “Place Concrete” and Subsection 500.3.05.Z.3, “Bridge Deck Curing.”

B. Curbs

Construct curbs of the dimensions required monolithic with the approach slab, when specified on the Plans. Place, finish, and cure the curb as specified in Section 441.

C. Barriers

Construct and finish the barriers according to Section 500, Section 621 and Plan details. Use concrete that is Class A or better and proportioned and mixed according to Section 500.

D. Final Finish

When the concrete has hardened and standing water and moisture sheen have disappeared, give the concrete a final finish, manually or mechanically, according to requirements in Section 500 for bridge decks.

433.3.06 Quality Acceptance

The riding quality of approach slabs will be tested with the Lightweight Profiler as part of the bridge deck according to Subsection 500.3.06.E, “Ride Quality Test”.

433.3.07 Contractor Warranty and Maintenance

General Provisions 101 through 150.

433.4 Measurement

The quantity for payment for reinforced concrete approach slabs is the number of square yards (meters) complete in place and accepted. The pay area is computed by the overall length and width of the approach slabs as shown on the Plans, with no deductions for areas with end posts and expansion joints.

433.4.01 Limits

Curbs, barriers, and reinforcing steel are not measured for payment, but their cost is included in the price bid for the individual Contract item.

433.5 Payment

The area measured will be paid for at the Contract Unit Price per square yard (meter).

Payment will be made under:

Item No. 433	Reinforced concrete approach slab	Per square yard (meter)
Item No. 433	Reinforced concrete approach slab, including curb	Per square yard (meter)
Item No. 433	Reinforced concrete approach slab, including barrier	Per square yard (meter)
Item No. 433	Reinforced concrete approach slab, including sloped edge	Per square yard (meter)

433.5.01 Adjustments

General Provisions 101 through 150.

Section 434—Asphalt Paved Ditches

434.1 General Description

This work includes paving ditches, spillways, and other similar waterways with hot asphalt mixture.

434.1.01 Definitions

General Provisions 101 through 150.

434.1.02 Related References

A. Standard Specifications

Section 400—Hot Mix Asphaltic Concrete Construction

Section 802—Aggregates for Asphaltic Concrete

Section 820—Asphalt Cement

Section 828—Hot Mix Asphaltic Concrete Mixtures

B. Referenced Documents

GDT 7

GDT 66

GDT 115

434.1.03 Submittals

General Provisions 101 through 150.

434.2 Materials

Ensure that materials meet the requirements of Section 802, Section 820, and Section 828.

434.2.01 Delivery, Storage, and Handling

General Provisions 101 through 150.

434.3 Construction Requirements

434.3.01 Personnel

General Provisions 101 through 150.

434.3.02 Equipment

Use equipment that meets the requirements in Section 400 for mixing and transporting the asphaltic concrete.

A. Hand-Operated Roller

Use a hand-operated roller that weighs at least 300 lbs (135 kg).

B. Small Power Roller

Use a small power roller satisfactory to the Engineer.

C. Vibratory Device

Use a vibratory device satisfactory to the Engineer.

D. Hand Tampers

Use hand tampers to compact areas that cannot be reached with rollers or vibrators.

E. Forms

Use forms that are satisfactory to the Engineer, if required.

434.3.03 Preparation

General Provisions 101 through 150.

434.3.04 Fabrication

General Provisions 101 through 150.

434.3.05 Construction

Use ditch paving construction methods that allow water to flow continuously and that keep the ditch unobstructed to prevent ponding or standing water. Protect the ditch paving areas under construction from flowing water, elements, and other disturbances until the materials are fully set.

A. Develop the Asphalt Mixture

Use a uniform, homogeneous asphalt mixture of aggregate and bituminous material. A job mix formula is not required; however, base the mixture on an approved design analysis that meets the requirements of either a 4.75 mm mixture or 9.5 mm Superpave mixture (Level A) as described in Section 828 except that testing for moisture susceptibility, GDT 66 and rutting susceptibility, GDT 115, will not be required. The asphalt content for ditch paving shall be set 1.0% higher than the optimum asphalt content determined during the mix design analysis. Control the mixture within the mixture control tolerances for the respective mix given in Section 828. Do not continue operation outside the mixture control tolerances.

B. Form the Subgrade

Form the subgrade as follows:

1. Form the subgrade at the required depth below and parallel to the finished surface of the ditch or waterway required by the Plans.
2. Remove soft, yielding, or otherwise unsuitable material and substitute with suitable material.
3. Compact the subgrade to 90 percent of the maximum dry density as determined by GDT 7. Finish to a smooth, firm surface.
4. If shown on the Plans, place and compact the subgrade material to the required thickness.

C. Stake the Forms

If forms are required, stake them securely into position at the correct line and elevation.

D. Place the Asphalt Mixture

Place the mixture on the prepared subgrade only when the subgrade is properly prepared and weather conditions are suitable. Place as follows:

1. Place the mixture within the temperature limits of 275 º to 325 ºF (135 º to 160 ºC).
2. Smooth the mixture by raking or screeding.
3. Thoroughly compact the mixture as follows:
   a. Roll with a hand-operated roller, small power roller, or vibratory device satisfactory to the Engineer.
   b. Use hand tampers to compact areas that cannot be reached with rollers or vibrators.
   c. Compact until the surface is smooth and even and the texture is dense and uniform. The thickness, lines, grades, and cross section shall be as shown on the Plans.
4. Remove forms, if used, and replace with compacted backfill. Shape the shoulders and slopes and complete them to conform to the required section.

434.3.06 Quality Acceptance

General Provisions 101 through 150.

434.3.07 Contractor Warranty and Maintenance

General Provisions 101 through 150.

434.4 Measurement

A. Asphalt Ditch Paving

Asphalt for ditch paving is measured in tons (megagrams) as mixed, placed, and accepted. The actual weight is determined by using an approved motor truck scale to weigh each loaded vehicle as the material is hauled to the roadway. The weight measured includes all materials.

B. Incidental Items

Incidental items such as preparing the subgrade and excavating unsuitable material and backfill are not measured for separate payment, unless otherwise specified. Those costs are included in the Unit Price Bid.

434.4.01 Limits

General Provisions 101 through 150.

434.5 Payment

A. Asphalt Ditch Paving

Asphalt for ditch paving will be paid for at the Contract Unit Price per ton (megagram) complete in place and accepted. Payment is full compensation for furnishing materials, bituminous material, and equipment and for preparing the subgrade, hauling, stockpiling, mixing, spreading, and rolling.

B. Incidental Items

Unless otherwise specified, no separate payment will be made for incidental items.

Payment will be made under:

Item No. 434	Asphalt ditch paving mixture	Per ton (megagram)

434.5.01 Adjustments

General Provisions 101 through 150.

Section 435—Rapid Setting Cement Concrete End Dams and Patches

435.1 General Description

This work includes constructing bridge joint end dams and partial or full depth patches in concrete structures. Use rapid-setting cement concrete under these conditions:

- Quick traffic return is required.
- The required minimum depth is 1 in. (25 mm)

435.1.01 Definitions

General Provisions 101 through 150.

435.1.02 Related References

A. Standard Specifications

Section 461—Sealing Roadway and Bridge Joints and Cracks

Section 500—Concrete Structures

Section 504—Twenty-Four Hour Accelerated Strength Concrete

Section 833—Joint Fillers and Sealers

Section 886—Epoxy Resin Adhesives

Section 934—Rapid Setting Patching Materials for Portland Cement Concrete

B. Referenced Documents

General Provisions 101 through 150.

435.1.03 Submittals

A. Mix Design

Submit rapid-setting cement concrete mix designs and materials to the Office of Materials for verification and approval at least 35 days before use.

435.2 Materials

Use these materials to construct bridge joint end dams or repair concrete:

Material	Section
Rapid-setting Cement Material	934
Epoxy Adhesive, Type II	886
Silicone Sealant	461.3.05.C.2 and 833.2.06
Preformed Foam Joint Filler	833.2.10

435.2.01 Delivery, Storage, and Handling

General Provisions 101 through 150.

435.3 Construction Requirements

435.3.01 Personnel

General Provisions 101 through 150.

435.3.02 Equipment

General Provisions 101 through 150.

435.3.03 Preparation

Prepare the surfaces for construction as follows:

1. Scarify the surface within the repair area using a concrete scabbler to remove unsound concrete and concrete laitance down to sound coarse aggregate.
2. After scarifying the surface, sandblast it to remove loose or unsound concrete or other contaminates.
3. Clean the prepared area with compressed air.
4. Completely coat the bottom and vertical side walls of the prepared area with a film of Type II epoxy approximately 10 to 20 mils (0.25 to 0.50 mm) thick.

435.3.04 Fabrication

General Provisions 101 through 150.

435.3.05 Construction

Repair the bridge joint end dams in the locations or areas indicated on the Plans or as designated by the Engineer.

Remove asphaltic concrete from the end dams areas according to Figure 1 (Figure 1 metric).

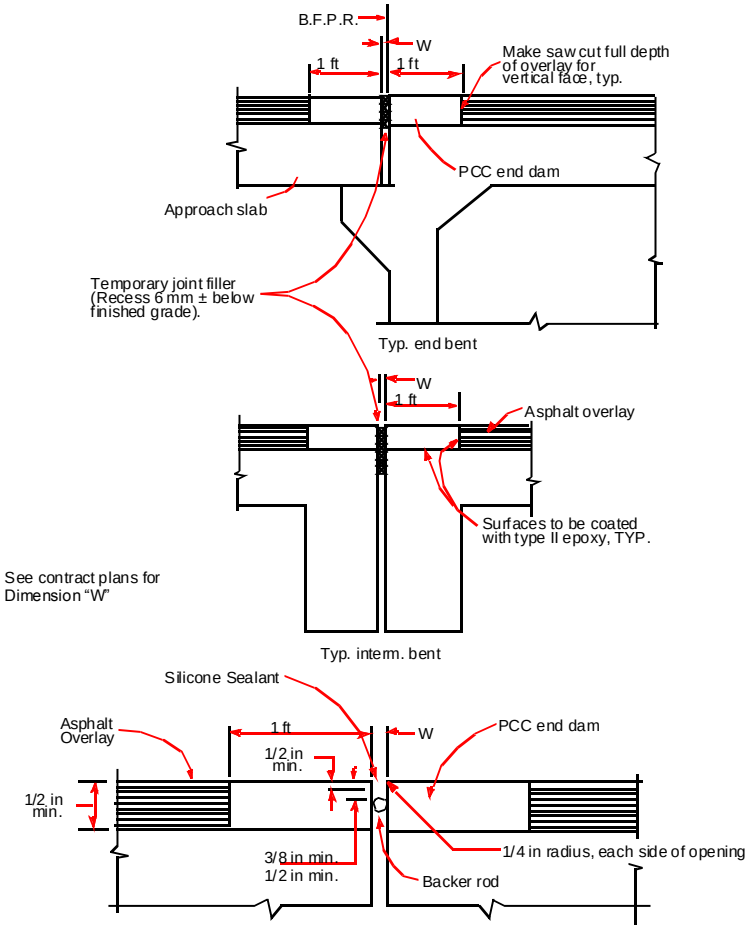
B.F.P.R.
W
1 ft
1 ft
Make saw cut full depth of overlay for vertical face, typ.
PCC end dam
Approach slab
Temporary joint filler (Recess 6 mm ± below finished grade).
Typ. end bent
W
1 ft
Asphalt overlay
Surfaces to be coated with type II epoxy, TYP.
See contract plans for Dimension "W"
Typ. interm. bent
Silicone Sealant
Asphalt Overlay
1 ft
W
PCC end dam
1/2 in min.
1/2 in min.
3/8 in min.
1/2 in min.
1/4 in radius, each side of opening
Backer rod

Figure 1

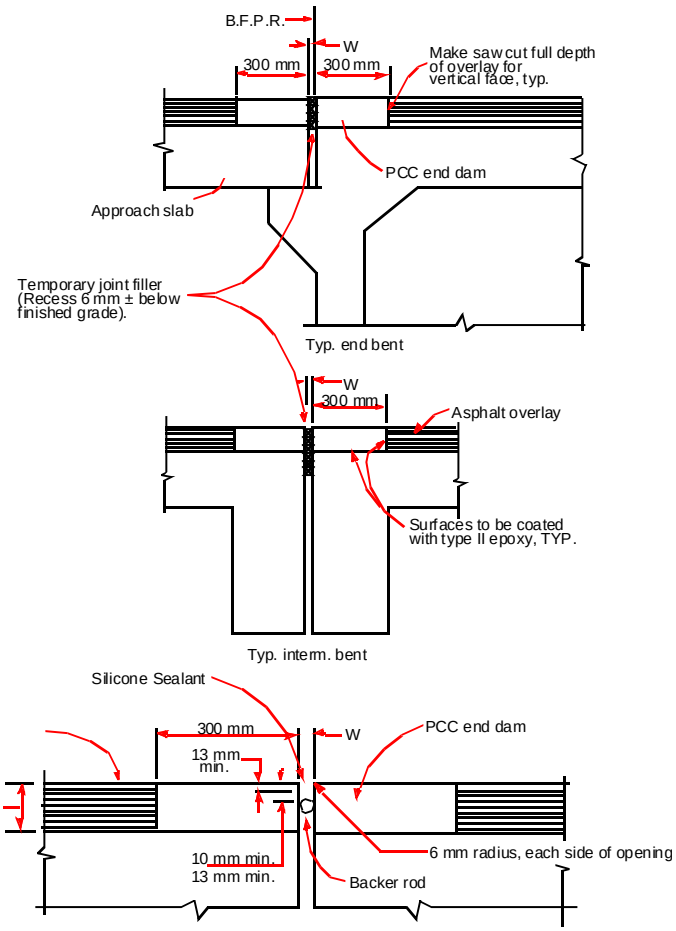

Figure 1 (metric)

A. Weather Limitations

Place rapid-setting cement concrete within the temperature range of 40 ºF to 100 ºF (4 ºC to 38 ºC). Do not apply epoxy bonding adhesive to a damp substrate.

B. Mix Design

Do not use aggregate that is larger than one-quarter the depth of the repair.

C. General Instructions

Handle, mix, place, and finish rapid-setting cement concrete according to the manufacturer's instructions. Ensure that the finished rapid-setting cement concrete surface is the same elevation and cross slope as the adjacent pavement.

D. Placement

Place the rapid-setting cement concrete as follows:

1. Deposit it in the area while the epoxy is still tacky.
2. Vibrate it to completely fill the area of the end dam or patch.

3. Finish the concrete to the proper grade; do not disturb it until the watersheen disappears from the surface.

E. Curing

Cure the rapid-setting cement concrete according to Subsection 500.3.05.Z "Cure Concrete," and as follows:

1. Cure it long enough to develop the concrete strength in place as required in Subsection 435.3.05.G, "Compressive Strength."
2. Use the compressive strength test procedures in Subsection 504.3.06.A, "Compressive Strength Testing," except the Laboratory may reduce the number of test cylinders.

F. Joint Reestablishment

Reestablish the joint as follows:

1. Place temporary joint material that conforms to Subsection 833.2.10 in the joint so to place and screed the full width of the end dams or patches and to bridge the temporary joint material with the screeding apparatus.
2. If patching a joint, reestablish the joint opening to match the existing joint; if constructing an end dam, match the Plan details.
3. Remove the temporary joint material. Sandblast the vertical faces of the joint opening to remove loose material and to produce a coarse texture conducive to bonding sealant.
4. Immediately after sandblasting, seal the opening according to Figure 1 (metric) and Subsection 461.3.05.C.2.

G. Compressive Strength

Do not allow traffic on end dams or patches until the rapid-setting cement concrete obtains a minimum compressive strength of 2,500 psi (15 MPa).

435.3.06 Quality Acceptance

A. Correction of Defects

Remove and replace, at the Contractor's expense, completed end dams or patches that contain cracks, are disbonded from asphalt or slab, or are damaged from construction or traffic before Final Acceptance.

Replace, at the Contractor's expense, silicone joint sealant that fails or that is not within the depth tolerances of Figure 1 (Figure 1metric).

435.3.07 Contractor Warranty and Maintenance

General Provisions 101 through 150.

435.4 Measurement

The area measured for payment is the rapid-setting cement concrete in cubic feet (meters) used in bridge joint end dams or patches completed in place and accepted.

435.4.01 Limits

General Provisions 101 through 150.

435.5 Payment

The joints measured will be paid for at the Contract Unit Price per cubic foot (meter) for bridge joint and end dams, and per cubic foot (meter) for patches. Payment is full compensation for:

- Sawing as required
- Removing the asphaltic concrete material or spalled, broken, or damaged Portland Cement Concrete
- Cleaning the substrate by sandblasting or abrading and planing
- Mixing, placing, finishing, and curing the concrete

- Providing equipment, tools, and labor
- Performing incidentals to complete the work, including sealing the joints

Payment will be made under:

Item No. 435	Rapid-setting cement concrete bridge joint end dams	Per cubic foot (meter)
Item No. 435	Rapid-setting cement concrete patching Portland cement concrete	Per cubic foot (meter)

435.5.01 Adjustments

General Provisions 101 through 150.

Section 436—Asphaltic Concrete Curb

436.1 General Description

This work includes constructing asphaltic concrete curbs according to these Specifications. Construct curb that conforms to the lines and grades shown on the Plans or established by the Engineer.

436.1.01 Definitions

General Provisions 101 through 150.

436.1.02 Related References

A. Standard Specifications

Section 400—Hot Mix Asphaltic Concrete Construction

Section 413—Bituminous Tack Coat

Section 802—Aggregates for Asphaltic Concrete

Section 820—Asphalt Cement

B. Referenced Documents

GDT 7

GDT 66

GDT 115

436.1.03 Submittals

General Provisions 101 through 150.

436.2 Materials

Ensure that materials meet the requirements of Section 802, Section 820, and Section 828.

Use a uniform, homogeneous asphalt mixture of aggregate and bituminous material. A job mix formula is not required; however, base the mixture on an approved design analysis that meets the requirements of either a 4.75 mm mixture or 9.5 mm Superpave mixture (Level A) as described in Section 828 except that testing for moisture susceptibility, GDT 66 and rutting susceptibility, GDT 115, will not be required. The asphalt content for asphaltic concrete curb shall be set 1.0% higher than the optimum asphalt content determined during the mix design analysis. Control the mixture within the mixture control tolerances for the respective mix given in Section 828. Do not continue operation outside the mixture control tolerances.

436.2.01 Delivery, Storage, and Handling

General Provisions 101 through 150.

436.3 Construction Requirements

436.3.01 Personnel

General Provisions 101 through 150.

436.3.02 Equipment

Use equipment that meets the requirements in Section 400 for mixing and transporting the asphaltic concrete.

A. Self-Propelled Curbing Machine

For curb construction, use an approved self-propelled curbing machine equipped with:

- A hopper
- A power-driven screw or other device that forces the mixture through a tube and then through a die attached to the tube

Design the mold to produce the desired cross section of the curb. Ensure that the curbing machine can:

- Thrust against the asphalt mixture to eliminate objectionable surface voids as the mixture passes through the mold
- Produce curbing with a uniform texture, shape, and density

Use hand methods adjacent to structures.

436.3.03 Preparation

Prepare the curb foundation as follows:

1. Excavate subgrades for header type curbs to the required depth.
2. Remove and replace soft or unstable material with stable material.
3. Compact and finish the subgrade to 90 percent of the maximum density as determined by GDT 7.
4. Shape the subgrade to the required line, grade, and cross section.
5. When placing the curb on existing pavement, thoroughly remove dirt and objectionable matter from the area receiving the curb.
6. Apply a tack coat at the rate directed by the Engineer to the full width of the curb being placed.

NOTE: Place sections of curb only after constructing adjoining spillways and drainage outlets.

436.3.04 Fabrication

General Provisions 101 through 150.

436.3.05 Construction

A. Mixing Asphaltic Concrete

Ensure that the asphaltic concrete manufacturer meets the requirements of Section 400, as applicable.

B. Placing Curb Material

When beginning construction, determine the working temperature of the asphaltic mixture to achieve the best results. Do not place curb material on an area where the surface temperature is below 40 ºF (4 ºC).

When the machine used to lay the asphaltic curb does not give adequate compaction as determined by the Engineer, take corrective measures to compact the finished curb adequately. These measures include, but are not limited to:

- Adjusting the mix
- Loading the machine with additional weight
- Using other corrective measures

C. Observing Tolerance

If the grade line is uniform, the curb can slump 0.25 in (6 mm) below the specified height.

D. Curing and Protecting the Curb

Protect the newly laid curb from traffic by using a barricade or other methods until the asphaltic mixture has cooled to air temperature. Once the curb is cool, immediately backfill it.

436.3.06 Quality Acceptance

General Provisions 101 through 150.

436.3.07 Contractor Warranty and Maintenance

Maintenance includes protecting the finished curb until Final Acceptance.

Remove and replace curb or curb sections displaced, destroyed, or damaged from Contractor negligence at no additional cost to the Department.

436.4 Measurement

Asphaltic concrete curb complete in place and accepted is measured in linear feet (meters) along the face of the curb.

Tack coat is measured and paid for according to Section 413.

436.4.01 Limits

General Provisions 101 through 150.

436.5 Payment

Asphaltic concrete curb measured for payment will be paid for at the Contract Unit Price per linear foot (meter) for each curb height. Payment is full compensation for furnishing materials, including bituminous material, preparing the subgrade or pavement surfaces, cleaning, hauling, mixing, placing and replacing if required, and maintaining the curb to complete the Item.

Payment will be made under:

Item No. 436	Asphaltic concrete curb___ in(mm)	Per linear foot (meter)

436.5.01 Adjustments

General Provisions 101 through 150.

Section 437—Granite Curb

437.1 General Description

This work includes furnishing and installing granite curb including excavating, and backfilling. Construct curb that conforms to the lines and grades shown on the Plans or established by the Engineer.

437.1.01 Definitions

General Provisions 101 through 150.

437.1.02 Related References

A. Standard Specifications

Section 805—Rip Rap and Curbing Stone

B. Referenced Documents

General Provisions 101 through 150.

437.1.03 Submittals

General Provisions 101 through 150.

437.2 Materials

Use granite curbing that meets the requirements of Subsection 805.2.02.

Ensure that Type A curbing with dressed surfaces is free from drill marks or other artificial blemishes.

437.2.01 Delivery, Storage, and Handling

General Provisions 101 through 150.

437.3 Construction Requirements

437.3.01 Personnel

General Provisions 101 through 150.

437.3.02 Equipment

General Provisions 101 through 150.

437.3.03 Preparation

Prepare and excavate the foundation as follows:

1. Thoroughly tamp the bottom of the trench. Remove soft or yielding material to the depth ordered by the Engineer.
2. Refill the trench with stable material and tamp the material in 4 in (100 mm) layers or less.
3. Place the granite curb on a dry, firm foundation.

437.3.04 Fabrication

General Provisions 101 through 150.

437.3.05 Construction

A. Setting the Curb

Set the curb true to line and grade and closely fit the adjacent sections as follows:

1. Thoroughly ram and maul the curbing into place.

2. Immediately after setting the curb, place and compact the backfilling in 4 in (100 mm) layers or less. Use backfill material approved by the Engineer.
3. When setting the curb on a fill or placing more than 6 in (150 mm) of the curb above the surrounding ground, protect the curb by placing at least an 18 in (450 mm) wide bank of dirt behind it level with the top of the curb.
4. Divert the water away from the trench on steep grades or wherever there is a danger of water getting into the trench.
5. Lower the curb for driveways and alleys as directed. Cut and round curb sections adjacent to lowered curbs to 45 degrees.
6. Provide weep holes and drainage openings as indicated on the Plans.

437.3.06 Quality Acceptance

General Provisions 101 through 150.

437.3.07 Contractor Warranty and Maintenance

General Provisions 101 through 150.

437.4 Measurement

Granite curb complete and in place is measured for payment by the linear foot (meter) along the inner top exposed edge nearest the roadway centerline.

Measurement for payment is not made for foundation excavation, preparation, compaction, weep holes, or drainage openings.

437.4.01 Limits

General Provisions 101 through 150.

437.5 Payment

This item will be paid for at the Contract Unit Price per linear foot (meter) for straight curbs, radial, or curved curbs, complete in place and accepted.

Payment will be made under:

Item No. 437	Straight granite curb, [thick] in (mm) x [depth] in (mm), type ___	Per linear foot (meter)
Item No. 437	Circular granite curb, [thick] in (mm) x [depth] in (mm), type ___	Per linear foot (meter)

437.5.01 Adjustments

General Provisions 101 through 150.

Section 438—Precast Concrete Header Curb

438.1 General Description

This work includes furnishing and installing precast concrete header curb according to the Plans.

438.1.01 Definitions

General Provisions 101 through 150.

438.1.02 Related References

A. Standard Specifications

Section 441—Miscellaneous Concrete

Section 500—Concrete Structures

Section 853—Reinforcement and Tensioning Steel

Section 866—Precast Concrete Catch Basin, Drop Inlet, and Manhole Units

B. Referenced Documents

General Provisions 101 through 150.

438.1.03 Submittals

General Provisions 101 through 150.

438.2 Materials

Use concrete materials that meet the requirements of Section 500, Class AA-1, air entrained, and the following Specifications:

Reinforcing and Tensioning Steel	853.2.01
Dowel Bars and Tie Bars	853.2.08

Ensure that the manufacture and testing of concrete cylinders meet the requirements of Section 866, as applicable.

438.2.01 Delivery, Storage, and Handling

General Provisions 101 through 150.

438.3 Construction Requirements

438.3.01 Personnel

General Provisions 101 through 150.

438.3.02 Equipment

General Provisions 101 through 150.

438.3.03 Preparation

General Provisions 101 through 150.

438.3.04 Fabrication

General Provisions 101 through 150.

438.3.05 Construction

A. Excavation

Excavate the subgrade to the required grade and cross section shown on the Plans or as directed by the Engineer.

Remove unsuitable material in the subgrade and backfill as necessary.

B. Precast Concrete Header Curb

Use precast concrete header curb as an alternate for granite curb when specified in the Plans.

1. Do not use it with existing or required granite curb, unless shown on the Plans or directed by the Engineer.
2. Make precast header curb in tangent sections only.
3. Pour curbed portions in place according to Section 441. Provide dowels or dowel holes in poured-in-place portions for tying in precast sections.
4. Ensure that precast sections conform to the dimensions and details on the Plans.

438.3.06 Quality Acceptance

General Provisions 101 through 150.

438.3.07 Contractor Warranty and Maintenance

General Provisions 101 through 150.

438.4 Measurement

Precast concrete header curb complete in place is measured per linear foot (meter). Excavation and backfill are not measured separately for payment.

438.4.01 Limits

General Provisions 101 through 150.

438.5 Payment

This Item measured for payment includes the required excavation, backfill, and incidentals to complete the Item.

Payment will be made under:

Item No. 438	Precast concrete header curb [height] in (mm)	Per linear foot (meter)

438.5.01 Adjustments

General Provisions 101 through 150.

Section 439—Portland Cement Concrete Pavement (Special)

439.1 General Description

This work includes constructing pavement composed of Portland cement concrete, with or without reinforcement as specified, on a prepared subgrade or subbase course.

Follow the requirements of these Specifications and conform with the lines, grades, thicknesses, and typical cross-sections shown on the Plans or established by the Engineer.

439.1.01 Definitions

General Provisions 101 through 150.

439.1.02 Related References

A. Standard Specifications

Section 152—Field Laboratory Building

Section 430—Portland Cement Concrete Pavement

Section 431—Grind Concrete Pavement

Section 461—Sealing Roadway and Bridge Joints and Cracks

Section 500—Concrete Structures

Section 800—Coarse Aggregate

Section 801—Fine Aggregate

Section 830—Portland Cement

Section 831—Admixtures

Section 832—Curing Agents

Section 833—Joint Fillers and Sealers

Section 853—Reinforcement and Tensioning Steel

Section 880—Water

Section 886—Epoxy Resin Adhesives

B. Referenced Documents

AASHTO T 126

AASHTO T 22

AASHTO T 23

ASTM C 94, Requirements for Uniformity

GDT 26

GDT 27

GDT 28

GDT 32

GDT 72

GDT 78

SOP 34

439.1.03 Submittals

A. Profilograph Certification

Before paving, ensure that the profilograph and operator are certified by the Office of Materials in accordance with Standard Operating Procedure No. 34, Certification of Contractor Personnel and Equipment for Smoothness Testing of Portland Cement Concrete Pavement with the Rainhart Profilograph. Certification includes a mechanical check of the profilograph functions and a written examination by the operator.

Request certification in writing to the Office of Materials at least two weeks before it is needed.

B. Report Form

Refer to Subsection 439.3.06.L, "Smoothness Testing" for report form and submittal requirements.

C. Concrete Design

Submit for approval a concrete design prepared by a testing laboratory approved by the Office of Materials. The Contractor will transmit the design to the Engineer for approval at least 35 days before use.

Or, submit for approval concrete mix proportions with commonly used materials without preparation by a laboratory. The Office of Materials may approve proportions based upon the past performance of the material combination.

439.2 Materials

Ensure that materials meet the requirements of the following Specifications:

Material	Section
Portland cement	830.2.01
Portland Pozzolan cement	830.2.03
Water	880.2.01

Material	Section
Fine Aggregate, Size No. 10	801.2.02
Coarse Aggregate, Class A or B Crushed Stone or Gravel, Sizes as Specified	800.2.01
Steel Bars for Reinforcement	853.2.01
Steel Wire for Concrete Reinforcement	853.2.06
Welded Steel Wire Fabric for Concrete Reinforcement	853.2.07
Dowel Bars and Bar Coatings	853.2.08
Curing Agents	832
Air Entraining Admixtures	831.2.01
Fly Ash and Slag	831.2.03
Joint Fillers and Sealers	833
Low Modulus Silicone Sealant for Roadway Construction Joints	833.2.06
Epoxy Adhesive for Repairing Cracks	886.2.01
Chemical Admixtures	831.2.02

A. Fly Ash

Fly ash may be used as a concrete additive to promote workability and plasticity. Use it as a partial replacement for Portland cement in concrete, but follow these limits:

1. Do not replace the cement quantity more than 15 percent by weight.
2. Replace cement with fly ash at the rate of 1.25 to 2.0 lbs (1.25 to 2.0 kg) of fly ash to 1 lb (1.0 kg) of cement.
3. Ensure that the fly ash mix conforms to Subsection 430.3.06, "Quality Acceptance."
4. Do not use Type IP cement in fly ash mixes.

B. Granulated Iron Blast-Furnace Slag

If high early strengths are not desired, use granulated slag as a partial replacement for Portland cement in concrete. Follow these limits:

1. Replace the quantity of cement 50 percent or less by weight if the 5-day forecast of the National Weather Service expects temperatures higher than 60 °F (15 °C).
   a. If the 5-day expected low temperature is less than 60 °F (15 °C) but not less than 40 °F (4 °C), replace the quantity of cement 30 percent or less by weight.
   b. If the 5-day expected low temperature is less than 40 °F (4 °C); do not use granulated slag.
2. Replace cement with slag at the rate of 1 lb (1.0 kg) of slag to 1 lb (1.0 kg) of cement.
3. Ensure that the granulated slag mix conforms to Subsection 430.3.06, "Quality Acceptance".
4. Do not use Type IP cement or fly ash in slag mixes.

C. Composition of Concrete

Design the concrete mix to conform to the following requirements:

1. Coarse Aggregate

   Use coarse aggregate size No. 467, 67, or 57 for plain Portland Cement concrete pavement.

   Use size No. 67 or 57 coarse aggregate for continuous reinforced concrete pavement.

   Separate size No. 467 or 456 in individual stockpiles of size No. 4 and size No. 67. Blend according to approved mix proportions.

2. Fine Aggregate

   Use fine aggregate that meets the requirements for size No. 10.

   When using two sizes or sources of fine aggregate to produce the proper gradation, blend according to the approved design proportions.

439.2.01 Delivery, Storage, and Handling

Store fine aggregate from different sources in different stockpiles.

439.3 Construction Requirements

439.3.01 Personnel

A. Certified Operator

Before paving, have the Office of Materials certify a profilograph equipment operator. Certification includes a written examination by the operator.

439.3.02 Equipment

A. Equipment Requirements

Provide equipment and tools to perform the work. Provide equipment that allows the paver to operate at a constant production rate and minimizes starting and stopping. The Engineer may limit the production rate or batch size if equipment does not keep pace with the other operations or causes poor workmanship.

B. Ramp Screeds and Hand Finishing Tools

Ramp screeds and hand finishing tools may be used instead of conventional mainline paving equipment.

C. Scales

Before use, the Engineer will inspect and approve the scales to weigh concrete materials and the devices to measure water. Tolerances are ± 1.0 percent throughout the operating range. Measure admixtures to ± 3.0 percent.

D. Protective Equipment

Provide materials to protect the concrete edges and surface against rain, including:

- Standard metal forms or wood planks to protect the pavement edges
- Covering material such as burlap or cotton mats, curing paper, or plastic sheeting material to protect the pavement surface

E. Auxiliary Vibrator

Keep one auxiliary vibrator available in case of mechanical malfunctions.

F. Texturing Equipment

Ensure that the tines on the equipment:

- Are the same size and length and are rectangular shaped
- Have approximately 0.5 in (13 mm) of space between them
- Are between 1/16 in and 1/8 in (2 mm and 3 mm) wide

439.3.03 Preparation

A. Prepare the Roadbed

Prepare the roadbed as required by the Plans and Specifications before placing concrete pavement.

B. Observe Condition of Subgrade and Subbase

Check the subgrade and subbase as follows:

1. Prepare the full width of the subgrade and subbase according to the Plans and Specifications.
2. Ensure that the surface immediately under the concrete pavement allows proper pavement thickness and yield.
3. Trim high areas to the proper elevation.
4. Ensure that the subbase can support paving equipment without rutting or bogging.

439.3.04 Fabrication

General Provisions 101 through 150.

439.3.05 Construction

A. Set Forms

Set the forms as follows:

1. Compact the foundation under the forms true to grade. Set the form so that it firmly contacts the foundation for the entire length at the specified grade.
2. Prevent the forms from settling or springing under the finishing machine.
3. Clean and oil the forms before placing the concrete.

B. Place Concrete

After depositing the concrete on the grade, avoid rehandling it. Unload and place it as follows:

1. Unload the concrete into an approved spreading device and mechanically spread it on the grade.
2. Place the concrete continuously between transverse joints without using intermediate bulkheads.
3. Perform any necessary hand spreading of concrete with shovels, not rakes.

NOTE: Do not allow personnel to walk in freshly mixed concrete with shoes coated with dirt or other materials.

4. Thoroughly consolidate the concrete on both sides of joint assemblies.
5. Ensure that vibration does not cause puddling or grout accumulation on the surface.

   For construction or expansion joints, do not use grout that accumulates ahead of the paver.
6. Deposit concrete near the formed joints. Do not dump or discharge concrete on a joint assembly unless the concrete is centered on the joint assembly.
7. Keep reinforcing steel free of dirt, oil, paint, mill scale, and loose or thick rust that could impair the bond of the steel to the concrete.

C. Consolidate and Finish

Ensure that the sequence of operations is continuous from placement to final finish.

1. Consolidation

   Perform vibration for the full width and depth of the pavement as follows:

   a. Do not allow the vibrators to misalign load transfer devices or contact forms or the foundation.
   b. Ensure that the operating frequency is within these ranges.
      - Use spud vibrators with an operating frequency of at least 7,000 vibrations per minute.
      - Use tube vibrators with an operating frequency of at least 5,000 vibrations per minute.
      - Use surface pan vibrators with an operating frequency of at least 3,500 vibrations per minute.
   c. Use hand-held vibrators if needed.

Ensure that the operating frequency is at least 4,500 vibrations per minute. The intensity shall be sufficient to affect the mass of concrete having a 1 in (25 mm) slump through a radius of at least 18 in (450 mm).

d. Obtain uniform consolidation and density throughout the pavement.

If the pavement is not uniform, stop the operation and provide methods or equipment that will produce pavement that conforms to the Specifications.

e. Keep a standby vibratory unit available in case a primary unit malfunctions.

2. Finishing

After striking off and consolidating the concrete, follow these steps:

a. The concrete may be smoothed and trued using a hand float.

b. Ensure that the surface within 6 in (150 mm) of the pavement edge shows no more than a ¼ in (6 mm) deviation in 10 ft (3 m) when tested with a 10 ft (3 m) straightedge in both transverse and longitudinal directions.

c. Ensure that mainline riding surface produces a profile index value of less than 7 in/ mile (100 mm/km) on each travel lane.

D. Protection from Rain

Protect the unhardened concrete from rain. See Subsection 439.3.02.D, "Protective Equipment."

When rain is imminent, stop paving operations and place forms against the sides of the pavement. Cover the surface of the unhardened concrete with the protective covering.

E. Remove Forms

Remove forms from in-place concrete after it has set for at least 12 hours, unless otherwise provided.

1. Remove forms carefully to avoid damaging the pavement.
2. After removing the forms, immediately cure the sides of the slab using the same method used to cure the pavement surface.
3. Remove and replace major honeycombed areas.

F. Work at Night

Provide adequate lighting for work performed at night. If lighting will not be provided at night, stop the concreting operation in time to finish and saw during daylight hours.

G. Provide Joints

Ensure that joints are designed, configured, and located as shown on the Plans or required by the Specifications.

1. At the Engineer's discretion, remove and replace plain concrete pavement that cracks during construction with no additional cost to the Department.
2. When chipping out random cracks for sealing, use nonrigid epoxy that meets Subsection 886.2.01 on cracks that are not under expansion-contraction influence.
3. Seal continuous cracks under movement with sealant that meets Subsection 833.2.06.
4. When removing and replacing a pavement section, replace an area at least 6 ft (1.8 m) long and the full width of the lane.
   a. Saw to vertical face the sections to be removed and replace the concrete as a construction joint with dowels.
   b. Use deformed bars as dowels in the saw-cut construction joint. Use the size specified for contraction joints in the Plans.
5. Thoroughly clean the drilled holes of contaminants and set the dowels into the hardened concrete face of the existing pavement with a Type VIII epoxy bonding compound. See Section 886 for epoxy bonding compound requirements.
6. For contraction joints, undamaged and properly positioned dowels may be used in existing construction or slab replacement areas. Coat the protruding dowel portions with a thin film of heavy grease.

7. When both sides of an existing construction or contraction joint require slab replacements, slabs may be replaced continuously from saw-cut construction joint to saw-cut construction joint. Use dowels specified for contraction joints.
8. Before placing concrete, uniformly apply a thin coat of heavy grease to epoxy-coated dowels.
9. When placing slabs continuously across transverse contraction joint locations, use saw-cuts to provide planes of weakness according to the requirements of this Specification and the GDOT construction standard for contraction joints.
10. Seal the joints according to the Plans.

H. Determine Types of Joints

1. Longitudinal Joints

   Longitudinal joints shall contain unpainted and uncoated deformed steel bars that are the size and length specified on the Plans.

   Place the bars perpendicular to the joint using a mechanical device, or rigidly secure the bars in place with supports.
2. Longitudinal Formed Joints

   Construct longitudinal formed joints while the concrete is in a plastic state.

   Use methods and equipment that locates the joint reinforcement properly without disrupting it during construction.
3. Longitudinal Sawed Joints

   Cut longitudinal sawed joints with a mechanical saw within three days after the concrete is placed and before traffic or equipment enters the pavement.
4. Transverse Joints

   Transverse joints consist of construction joints, contraction joints, or expansion joints constructed at required locations.

   a. Construct transverse joints in partial width or adjoining lanes to abut the same joint of adjacent lanes unless otherwise specified on the Plans.
   b. Ensure that transverse joints in plain Portland Cement concrete requiring load transfer devices contain either plastic-coated or epoxy-coated dowels.
   c. Before placing concrete, secure dowel bars in place with supporting assemblies.
   d. Secure the assemblies in position on the subbase to keep the dowels from moving during concrete placement.
   e. Place dowel bars to a vertical and horizontal tolerance of ± 1 in (± 25 mm) of the Plan position. Do not misalign the dowel bar more than 3/8 in per foot (10 mm per 300 mm) in the horizontal or vertical plane.
   f. Remove and replace dowel assemblies displaced from the Plan position more than the tolerances in Subsection 430.3.05.J, “Provide Joints.”
   g. When using epoxy-coated dowels, coat the entire surface with a thin film of heavy waterproof grease.
   h. Ensure accurate positioning of transverse sawed joints by marking the position of dowel bar assembly locations.
5. Construction Joints

   Construct transverse construction joints when interrupting concreting operations for more than one hour.

   NOTE: Do not construct transverse construction joints within 10 ft (3 m) of an expansion joint, contraction joint, or transverse plane of weakness.

   a. Move an unanticipated construction joint back to the last Plan joint and remove and dispose of excess concrete.
   b. Form construction joints by securing in place a removable bulkhead or header board.
      1) Place the board so that it conforms to the full cross section of the pavement. Secure it flush with the subbase and parallel to the normal transverse joints.
      2) Slot or drill the board to allow placement of reinforcement as required by the Plans.

NOTE: Do not use the roll of laitance and grout that forms in front of the paver adjacent to transverse construction joints.

c. Consolidate to full width and depth concrete adjacent to transverse construction joints with mechanical hand-type spud vibrators. Keep one auxiliary vibrator available in case of mechanical malfunctions.

d. Before applying the final finish to the concrete, stringline and correct variations of the concrete surface within 30 ft (9 m) on either side of the transverse construction joints. Provide equipment and tools such as:

- Work bridges
- Personnel
- String lines
- Straightedges
- Lighting

e. While the concrete is in a plastic condition, stringline the surface longitudinally and correct surface deviations greater than 1/8 in. in 15 ft (3 mm in 4.6 m) in any direction.

f. When using Plain Portland cement concrete pavement, place dowel bars in construction joints. Cast half the length of each dowel bar in the concrete during each phase of joint construction.

g. After the concrete has hardened, dismantle the bulkhead supporting the dowels. Do not disturb the dowels.

h. When using epoxy coated dowels, coat the protruding half of each dowel bar with a thin film of heavy waterproof grease before resuming joint construction. Grease coating is not required on plastic coated dowels.

6. Contraction Joints

Create planes of weakness in plain Portland cement concrete pavement by cutting joints in the pavement surface. Create the planes according to the Plans and as follows:

a. Saw transverse contraction joints before the pavement cracks. Begin sawing when the concrete has hardened enough to prevent surface raveling, usually 4 hours after placement but no more than 24 hours.

b. Continue sawing day and night regardless of weather conditions.

7. Expansion Joints

Transverse expansion joints are required at locations shown on the Plans.

a. Form expansion joints by securing a removable bulkhead that conforms to the full cross section of the pavement. Use bulkheads that can construct a vertical expansion wall without offsets, indentations, or burrs.

b. Use expansion joint filler required by the Plans.

c. Furnish and install preformed joint filler in lengths equal to the pavement width or the width of one lane. Do not use damaged or repaired joint fillers.

d. Position the expansion joint filler vertically in the joint and at the proper grade. Use an installing bar or other device to secure the expansion joint filler at the proper grade and alignment.

I. Seal the Joints

Clean and seal the joints according to Section 461 and the Plans.

Immediately after completing the curing period, fill in the joints with joint sealing material before opening the pavement to traffic.

J. Cure the Concrete

Immediately after finishing the concrete, cure the entire surface when the concrete will not mar. Use one or more of these methods:

1. Impervious Membrane Method

To use this method:

a. Spray the entire surface of the pavement with white pigmented curing compound immediately after finishing the surface and before the concrete has set.

   If the pavement is cured initially with cotton mats, burlap, or cotton fabric, apply the compound after removing the mats.

   NOTE: Do not apply curing compound during rain.

b. Use mechanical sprayers to apply curing compound under pressure at a minimum rate of 1 gal per 150 ft² (1 L per 3.5 m²).

   Use fully atomizing spraying equipment that is equipped with a tank agitator.

c. Thoroughly mix the curing compound immediately before use.

d. During application, use a mechanical device to stir the compound continuously.

e. If required, use a hand sprayer to spray odd widths, odd shapes, and concrete surfaces exposed by removing forms.

f. Do not apply curing compound to the inside faces of joints to be sealed.

g. If the membrane film becomes damaged within the curing period, repair the damaged portions immediately with additional compound.

2. White Polyethylene Sheeting

   To use this method:

   a. Cover the top surface and sides of the pavement with polyethylene sheeting. Lap the units at least 18 in (450 mm).

   b. Place the sheeting and weigh it down so that it contacts the surface.

   c. Extend the sheeting beyond the edges of the slab at least twice the thickness of the pavement.

   d. Unless otherwise specified, maintain the covering in place for 72 hours after placing the concrete.

3. Burlap, Cotton Fabric, or Other Methods

   Contractors may cure the pavement surface with burlap, cotton fabrics, or other materials if the section remains wet for the duration specified by the Engineer.

4. Cold Weather Curing

   To use this method:

   a. Remove and replace concrete that freezes before the initial set time at no additional cost to the Department.

   b. Use polyethylene or canvas to protect concrete that has set but is exposed to freezing temperatures within 24 hours of placement. Ensure that the internal concrete temperature is above freezing for at least 24 hours after placing the concrete.

   c. Obtain approval from the Engineer to use other protection methods such as hay, straw, or grass, or to change the duration of the protection.

K. Open Pavement to Traffic

Wait to open the pavement slab to traffic, except for joint sawing vehicles, until the concrete is 14 days old unless representative compressive tests show that the slab has a compressive strength of 2,500 psi (15 MPa).

Prevent pavement slab stress by constructing a ramp of compacted earth or other material to move on and off the pavement. Do not allow equipment that exceeds legal load limits on the pavement.

Protect the pavement against traffic from the public, employees, and agents.

1. Erect and maintain barricades. Employ watchmen to block traffic from the newly constructed pavement for the period required in this Specification.
2. Arrange the barriers away from public traffic on lanes remaining open.
3. Maintain signs that clearly indicate the lanes open to public traffic.

4. If traffic must go across the pavement, construct crossings satisfactory to the Engineer to bridge over the concrete. Construct the crossing without additional compensation.
5. Repair or replace pavement damaged by traffic or other causes before Final Acceptance without additional compensation. Make repairs to the Engineer's satisfaction.

439.3.06 Quality Acceptance

The typical section sheet in the Plans specifies concrete classifications for specific uses.

This Specification establishes minimum requirements for these concrete classifications for concrete design approval, concrete mix design proportions, batching control responsibilities, and acceptance of hardened concrete based upon compressive strength development.

Produce Portland cement concrete by combining proportions of approved materials in batches according to the construction methods specified in this Specification.

Mix concrete produced in a stationary central mix plant for at least 60 seconds after the materials enter the drum. Mix time may be reduced if the representative tests show that the concrete meets requirements of ASTM C 94, Requirements for Uniformity. Never mix less than 50 seconds.

A. Transit Mixed Concrete

Ensure that transit mixed concrete meets the requirements of Subsection 500.3.04.E.3, "Transit-Mixed Concrete."

B. Mix Design Criteria

Proportion concrete mix designs using the following requirements:

	Minimum Cement per Cubic Yard Concrete (CWT)	Maximum Water-Cement Ratio (lbs/lb)	Design Air Content Range (%)	Minimum Compressive Strength at 28 Days (psi)
Class 3	5.64	0.53	4.0 to 5.5	3,000
Class HES	6.58	0.47	4.0 to 5.5	3,500

	Minimum Cement per Cubic Meter Concrete (kg)	Maximum Water-Cement Ratio (kg/kg)	Design Air Content Range (%)	Minimum Compressive Strength at 28 Days (MPa)
Class 3	335	0.53	4.0 to 5.5	20
Class HES	390	0.47	4.0 to 5.5	25

C. Compressive Strength

Prepare and test at least 6 cylinders according to AASHTO T 126 and T 22 to ensure that the demonstrated laboratory compressive strength at 28 days for Class 3 concrete is at least 4,000 psi (30 MPa), and the minimum laboratory compressive strength for Class HES concrete is 3,000 psi (20 MPa) at 72 hours.

D. Field Adjustments on Concrete Mixes

Determine the aggregate surface moisture and apply free moisture corrections to the approved mix design. The Engineer will verify that the corrections are made properly.

Adjustment may be made to the approved proportions of the fine and coarse aggregate and water provided:

- The cement factor is not decreased.
- The water-cement ratio is not increased.

- Adjustments produce concrete proportions according to this Specification.
- The Engineer is notified before use.

E. Concrete Mix Tolerances

Ensure that concrete consistency and air content is maintained within the following limits:

1. Consistency

   Immediately before placement, use GDT 27 to determine concrete slump. Do not use concrete for Portland cement concrete pavement with a slump value greater than 3.5 in (90 mm).

2. Air Content

   Immediately before placement, use GDT 26, GDT 28, or GDT 32 to determine the air content of the concrete. Concrete will not be accepted that has an air content outside of the following limits:

Lower acceptance limit	3.0%
Upper acceptance limit	6.5%

F. Concrete Strength Acceptance

1. Class 3

   Portland cement concrete pavement strength will be accepted based on compressive strength development at 28 days. The compressive strength value shall be at least 3,000 psi (20 MPa).

   a. Fabricate and cure specimens for field acceptance according to AASHTO T 23.

   b. After curing, the OMR will test the cylinders according to AASHTO T 22. The test frequency is outlined in the Department's Sampling and Testing information.

2. Class HES

   High early concrete strength pavement may be accepted based on compressive strength development at 72 hours. The compressive strength value shall be at least 3,000 psi (20 MPa).

   When concrete is defective based on the 72-hour strength test and the concrete is retained for acceptability judgment, acceptance will be based on test results conducted at 28 days. The acceptance strength value shall be at least 3,500 psi (25 MPa).

   a. Cure specimens fabricated for 72-hour strength for 72 hours under conditions that are similar to those under which the pavement will be cured.

   b. Cure specimens fabricated for 28-day evaluation per AASHTO T 23.

   c. Test all specimens per AASHTO T 22.

G. Depth Measurement

The Engineer will designate pavement areas to be examined for depth measurement compliance with the Plan and Specifications.

Remove and replace areas deficient more than 1/4 in (6 mm). The Engineer may require a reduction in payment. Correct deficiencies in slab depth as directed by the Engineer.

H. Final Finish

Ensure that the final finish produces a pavement surface that is true to grade, uniform, and free of irregular, rough, or porous areas.

Produce the final surface finish using mechanical or hand-operated equipment to groove the plastic concrete. Use texturing equipment with rectangular-shaped spring steel tines.

I. Texture Depth Testing

Test the pavement surface to determine the texture depth by using GDT 72 at locations selected by the Engineer.

Transversely saw-groove areas that have a surface texture depth less than 0.02 in (0.5 mm). Ensure that the areas meet the average depth requirement of 0.04 in (0.9 mm) or greater. Saw-groove the areas to meet these dimensions:

- Width—1/8 in (3 mm)
- Depth—3/16 in (5 mm)
- Spacing—3/4 in center-to-center (19 mm)

J. Smoothness Profile

Include in the Contract Unit Bid Price the cost to furnish and operate a Rainhart (Model 860) Profilograph to measure pavement profile deviations.

Measure and correct pavement profile deviations as follows:

1. Ensure that the mainline riding surface produces a profile index value no greater than 7 in/mile (100 mm/ km) on each travel lane. Conduct tests according to GDT 78.

   Determine a profile index value for each tracing in each ¼ mile (0.5 km) segment.
2. Correct individual bumps or depressions that exceed the blanking band by more than 0.2 in (5 mm) at no additional expense to the Department.
3. Suspend paving operations if a profile index value exceeds 7 in/mile (100 mm/km) per lane for any segment. Take corrective action approved by the Engineer.
4. Test ramps, acceleration lanes, and deceleration lanes using GDT 78 to ensure that the average profile index value does not exceed 12 in/mile (200 mm/km) for the entire section length.
5. Correct individual bumps or depressions that exceed 0.2 in (5 mm) from the blanking band at no additional expense to the Department.
6. Take pavement profiles 4 ft (1.2 m) from and parallel to the new pavement edges for pavements greater than 16 ft (4.8 m) wide and up to 24 ft (7.2 m) wide. Test pavement 6 to 16 ft (1.8 to 4.8 m) wide parallel to and at the center line of the pavement section.
7. Begin the 0.25 mile (0.5 km) record segments at the first day's placement and continue until project completion, except as noted in this Specification.

   Combine pavement sections less than 650 ft (200 m) approaching a bridge with the previous 0.25 mile (0.5 km) segment to determine the profile index.
8. Calculate as separate record segment sections 650 ft (200 m) or greater approaching a bridge and sections at Project limits.
9. Determine a separate profile index value according to GDT 78 for the 100 ft (30 m) of roadway approaching each end of a bridge, up to and including the joint with the approach slab.

   Average the profile index from the right and left wheelpaths for each 100 ft (30 m) segment for each lane for each approach. Ensure that the average profile index value is no greater than 30 in/mile (500 mm/ km).
10. Notify the Engineer before profile testing. The Engineer will verify the results by randomly selecting at least 1 out of every 10 consecutive record segment profiles to compute the profile index and to compare with Contractor results.

K. Pavement Tolerances

For Projects that include weigh-in-motion truck scales, follow these pavement tolerances:

1. Ensure that the Rainhart Profilograph readings do not exceed 5 in/mile (80 mm/km) in the 600 ft (180 m) approach to the scales and the 200 ft (60 m) beyond the scales.
2. Ensure that the rolling straightedge measurements show no deviation greater than 1/16 in (2 mm) within 10 ft (3 m).

L. Smoothness Testing

Perform smoothness testing as follows:

1. Perform and evaluate profiles from the first day of placement before continuing paving.

When the test run is complete and evaluated, the Engineer may require equipment adjustments to improve smoothness before paving continues.

2. Complete the report form furnished by the Engineer, and attach it to each day's profilograph tracings. Include the following information in each trace:
   - Project number
   - Beginning and ending station numbers
   - 500 ft (150 m) paving stations
   - Traffic direction
   - Lane number
   - Date paved and tested
   - Construction joint locations
3. Have the certified profilograph operator obtain and evaluate traces to be submitted to the Engineer. Provide results no later than the end of the second work day following placement.
4. For mainline pavement, correct 0.25 mile (0.5 km) segments that do not meet the profile index requirement by using one of these methods:
   a. Grind the entire lane surface of the 0.25 mile (0.5 km) segment to a profile index value no greater than 7 in/mile (100 mm/km). Use equipment that meets the requirements in Section 431.
   b. Grind roughness in small segment areas no more than 50 ft (15 m) of full lane width to produce a profile index value no greater than 7 in/mile (100 mm/km).

      If more than 50 ft (15 m) of grinding is required, grind the complete 0.25 mile (0.5 km) segment according to Method a, above.
5. Correct ramps and acceleration and deceleration lanes that do not meet the profile index requirement to a profile index no greater than 12 in/mile (200 mm/km). Prevent individual bumps from exceeding 0.2 in (5 mm) from the blanking band. Use equipment specified in Section 431.
6. Correct 100 ft (30 m) bridge approach sections that do not meet the profile index requirement.
   a. Grind according to Section 431.
   b. Use a bump grinder to correct bumps with a baseline of 5 ft (1.5 m) or less.
   c. Grind the full lane width even when grinding individual bumps.
   d. Retest pavement segments containing corrective slab replacements for Final Acceptance.
7. Correct segments that do not meet the profile index criteria of this Specification at no additional expense to the Department. Retest segments after correction with the Rainhart Profilograph as specified.
8. The Engineer may conduct profilograph tests at any time to verify Contractor results. The Department may test record segments if the Engineer determines that the Contractor test results are inaccurate. If this occurs, see Subsection 439.5.01, "Adjustments."

M. Acceptance

Pavement smoothness will accepted when:

- The Engineer determines that the work was satisfactorily performed according to the Specifications.
- The completed pavement, including corrective Work, meets the applicable profile index value requirements.

439.3.07 Contractor Warranty and Maintenance

General Provisions 101 through 150.

439.4 Measurement

Portland cement concrete pavement (special) complete, in-place and accepted, is measured by the square yard (meter).

439.4.01 Limits

General Provisions 101 through 150.

439.5 Payment

Concrete pavement completed and accepted will be paid for at the full Contract Unit Price per square yard (meter).

Payment is full compensation for furnishing and placing materials, reinforcements, dowels, joint materials, supplies, and incidentals to complete the work.

Payment will be made under:

Item No. 439	Plain Portland cement concrete pavement, Class 3	Concrete _____ in (mm) thick	Per square yard (meter)
Item No. 439	Plain Portland cement concrete pavement, Class HES	Concrete _____ in (mm) thick	Per square yard (meter)
Item No. 439	Continuously reinforced concrete pavement, Class 3	Concrete _____ in (mm) thick	Per square yard (meter)
Item No. 439	Continuously reinforced concrete pavement, Class HES	Concrete _____ in (mm) thick	Per square yard (meter)

439.5.01 Adjustments

A. Profilograph Tests

If based on the Department's profilograph tests, the Engineer determines that the Contractor profilograph test results are inaccurate, the Contractor will be charged for profilograph testing at $500 for each trace mile ($250 for each trace kilometer) with a minimum charge of $500.

Section 440—Plain Portland Cement Concrete Shoulders

440.1 General Description

The work includes constructing plain Portland cement concrete shoulders on a prepared subgrade or subbase according to these Specifications. Construct the shoulders to conform with lines, grades, thicknesses, and cross sections shown on the Plans or established by the Engineer.

440.1.01 Definitions

General Provisions 101 through 150.

440.1.02 Related References

A. Standard Specifications

Section 430—Portland Cement Concrete Pavement

Section 461—Sealing Roadway and Bridge Joints and Cracks

Section 500—Concrete Structures

Section 815—Graded Aggregate

Section 830—Portland Cement

B. Referenced Documents

AASHTO T 22

AASHTO T 23

ASTM C 94, Requirements for Uniformity

AASHTO T 97

AASHTO T 126

GDT 26

GDT 27

GDT 28

GDT 32

440.1.03 Submittals

A. Concrete Mix Design

Submit to the Engineer a concrete mix design prepared by a qualified testing laboratory. The Engineer will transmit the design to the Office of Materials for approval. Ensure that the concrete mix design conforms to Subsection 440.2.A, "Composition of Class SP Concrete."

440.2 Materials

Use materials that conform to Subsection 430.2, "Materials," for Portland cement concrete pavement, or Subsection 815.2.01 for graded aggregate. Gradation requirements are modified to require 30 to 45 percent by weight to pass the No. 10 (2 mm) sieve for graded aggregate.

A. Composition of Class SP Concrete

Ensure that the concrete mix design conforms to the following requirements:

1. Aggregates
   a. Shoulders Not Constructed In Continuity With Travel Lanes
      1) Graded Aggregate meeting the requirements in Subsection 815.2.01 and as modified in Subsection 440.2, "Materials" may by used if the shoulders are not constructed in continuity with travel lanes.
      2) Graded aggregate may be used as the coarse and fine aggregate portions of the concrete mix except that the gradation is modified to require 30 to 45 percent passing the No. 10 (2 mm) sieve.
      3) Use aggregates manufactured to meet the gradation at the quarry or blended at the plant site to produce the desired results. Ensure a uniform aggregate gradation when charging the mixer.
   b. Shoulders Constructed in Continuity with Travel Lanes

      Use concrete aggregate in shoulders constructed in continuity with travel lanes as specified in Subsection 430.2.C, "Composition of Concrete" and Subsection 430.2.C.2, "Fine Aggregate".
2. Mix Design Criteria

   Base the proportions of Class SP concrete mix designs on the following requirements:

	Minimum Cement Content per Cubic Yard (meter) Concrete CWT (kg)	Maximum Water-Cement Ratio lbs/lb (kg/kg)	Design Air Content Range (%)
Class SP Concrete	4.25 (250)	0.75 (0.75)	5.0 to 7.0

3. Fly Ash

   Use fly ash as an additive in concrete to promote workability and plasticity or as a partial replacement for Portland cement if the following limits are met:

   a. Replace the cement quantity no more than 15 percent by weight.
   b. Replace cement with fly ash at the rate of 1.25 to 2 lbs (1.25 to 2.0 kg) of fly ash to 1 lb (1.0 kg) of cement.
   c. Do not use type IP cement in fly ash mixes.

   Calculate the water-cement ratio based on the total cement material in the mix including fly ash.

   Construct Portland cement concrete shoulders with the same class of concrete required in the adjacent sections when constructed in continuity with travel lanes, ramps, acceleration lanes, deceleration lanes, or other sections.

   Produce evidence that the proportions have the potential for strength development at 28 days as required in Subsection 440.3.06.B, "Approval of Mix Design Proportions".

440.2.01 Delivery, Storage, and Handling

General Provisions 101 through 150.

440.3 Construction Requirements

440.3.01 Personnel

General Provisions 101 through 150.

440.3.02 Equipment

Use equipment that meets the requirements in Subsection 430.3.02, "Equipment."

440.3.03 Preparation

Prepare the roadbed as required by the Plans and Specifications before placing the concrete shoulder.

Ensure that the foundation immediately under the concrete shoulder and the areas supporting the paving equipment will not contribute to deficient shoulder thicknesses or excessive yield losses.

440.3.04 Fabrication

General Provisions 101 through 150.

440.3.05 Construction

A. Placing Concrete

Place concrete as follows:

1. Deposit the concrete on the grade; do not rehandle it if possible.
2. Unless truck mixers, truck agitators, or non-agitating hauling equipment are equipped to discharge concrete without segregation, concrete shall be unloaded into an approved spreading device and mechanically spread on grade.
3. Place it continuously between transverse joints without using the intermediate bulkheads.
4. Perform any necessary hand spreading with shovels.

NOTE: Do not allow personnel to walk in freshly mixed concrete with shoes coated with harmful substances.

5. Thoroughly consolidate with vibration the concrete against and along the form faces and along the full length and both sides of joint assemblies.
6. Do not continue vibration if puddling or excessive grout accumulates on the surface.

NOTE: Do not use grout that accumulates ahead of the paver in construction or expansion joints.

7. Deposit concrete near formed joints. Do not dump or discharge concrete onto a joint assembly unless the concrete is centered on the joint assembly.

B. Placing Reinforcement

Place the reinforcement according to details on the Plans. Do not allow reinforcement placement to disrupt or damage the concrete. Do not insert lane tie bars into unsupported sides of fresh concrete.

C. Achieving Consolidation

Vibrate the full width and depth of the shoulder. Do not allow the vibrators to contact the foundation, load transfer devices, side forms, or joints.

If the vibrator does not produce uniform consolidation and density, stop the operation to furnish methods or equipment that will produce pavement according to the Specifications.

D. Finishing

Finish the concrete pavement as follows:

1. Smooth and true the concrete to the proper cross-section with hand floats or mechanical floats.
2. Ensure that the surface conforms to the required cross section and contains no irregular, rough, or porous areas.
3. Make the surfaces flush at the joint between the roadway and shoulder.
4. Finish the surface to provide a uniform texture in all areas except rumble strips. Use mechanical equipment for grooving plastic concrete, brooming, or burlap drag.
5. Form rumble strips in the shoulder surface according to the Plans.

E. Cleaning Up

Immediately after finishing, remove the loose material and clean the grout from the surface of adjacent lanes.

F. Constructing Joints

Use the joint, type of filler, and type of sealer designated in the Plans.

Construct joints according to Subsection 430.3.05.J, "Provide Joints," Section 461, and the following:

1. Transverse Contraction Joints

   Saw transverse contraction joints in the shoulder to abut like joints in the roadway, or construct joints as shown on the Plans.
2. Longitudinal Joints
   a. On the longitudinal joint adjacent to the adjoining lane, place reinforcement at locations shown on the Plans.
   b. Secure the reinforcement in place with supporting assemblies or by inserting into supported sides of fresh concrete, or by using mechanical equipment to insert them while placing concrete.
3. Construction Joints

   Form transverse construction joints when concreting operations will be interrupted for more than 1 hour. Construct the joint according to Subsection 430.3.05.K.5, "Construction Joints," except stringline requirements are 1/4 in (6 mm) maximum deviations in 15 ft (4.5 m).

G. Curing

Cure concrete according to Subsection 430.3.05.L, "Cure the Concrete."

H. Permitting Traffic on Shoulders

Before using a shoulder as a haul road for loaded or unloaded vehicles:

1. Ensure that compressive strength tests show the concrete has developed at least 2,000 psi (14 MPa) and is at least 7 days old.
2. Construct earth ramps to facilitate movement across the shoulder. Place barricades to prevent traffic encroachment.
3. Seal the joints before permitting vehicles or equipment on the shoulder.

440.3.06 Quality Acceptance

A. Concrete Mixing

Produce Portland cement concrete shoulders using Class SP concrete as follows:

1. Combine authorized proportions of approved materials in homogenous batches according to the construction methods in this Specification.
2. Mix concrete produced in a stationary central mix plant for at least 60 seconds after placing materials in the drum.
3. Reduction of the mix time may be allowed if representative tests show that the concrete meets requirements of ASTM C 94, Requirements for Uniformity, but never reduce the mix time to less than 50 seconds.
4. Ensure that transit mixed concrete meets requirements in Subsection 500.3.04.E.3, "Transit-Mixed Concrete."

B. Approval of Mix Design Proportions

The Office of Materials will review concrete mix designs and will verify that compressive strength development is according to AASHTO T 126 and T 22.

The Department will approve material combinations and mix designs using approved materials and complying with Subsection 440.2.A, "Composition of Class SP Concrete," and the following:

1. Flexural Strength

   Take at least 5 normally cured flexural specimens to ensure that the 28-day laboratory flexural design strength is according to AASHTO T 126 and T 97 and is within the following design acceptance range (DAR).

Class SP Concrete DAR =400 psi ± .67s (2.8 MPa ± .67s)
where s = The standard deviation of 28-day flexural specimens for a combination of materials and mix proportions prepared together. Do not use a value of s greater than 37 psi (255 kPa) to calculate DAR.

   A mixture may be used that exceeds the upper limit of the DAR.

2. Compressive Strength

   Prepare and test 6 cylinders according to AASHTO T 126 and T 22 to determine the 28-day laboratory compressive strength for Class SP concrete. Ensure that it exceeds the following minimum laboratory performance value (LPV).

Class SP Concrete LPV = 2,000 psi + .18R (13.8 MPa + .18R)
where R = The difference between the largest observed value and the smallest observed value for 28-day compressive strength specimens for a combination of materials and mix proportions prepared together.

C. Field Adjustments on Concrete Mixes

Determine the aggregate surface moisture and apply free moisture corrections to the approved mix design. The Engineer will verify that these corrections are made properly.

Adjustments to the approved proportions of the fine aggregate, coarse aggregate, and water may be made according to these guidelines:

- Do not decrease the cement factor.
- Do not increase the water-cement ratio.
- Ensure that adjustments produce concrete proportions according to this Specification.
- Notify the Engineer before making adjustments.

D. Concrete Mix Tolerances

Ensure that variations in consistency and concrete air content are within the following limits:

1. Consistency

   Immediately before placing, determine concrete slump using GDT 27. Concrete for Portland cement concrete shoulders will not be accepted if the slump value is greater than 3 in (75 mm).

2. Air Content

   Determine the concrete air content immediately before placement using GDT 26 or GDT 32.

   Concrete will not be accepted with an air content outside the following limits:

Lower acceptance limit	3.0 percent
Upper acceptance limit	7.5 percent

E. Acceptance of Concrete Strength

Portland cement concrete shoulder strength shall be accepted based upon its 28-day compressive strength development.

1. Subdivide the shoulder into separate lots of approximately 7,000 yd² (5850 m²) of concrete shoulder placed continuously, except for overnight or other minimal discontinuance.
2. Randomly select three production units from each lot for strength determination tests.
3. Cast one set of cylinders for each production unit being tested.
4. A set consists of two 6 by 12 in (150 by 300 mm) cylinders cured according to AASHTO T 23. The test is the average strength of the two cylinders tested according to AASHTO T 22.
5. Determine lot strength acceptance according to the limits in the Pay Factor Schedule for Strength Determinations at 28 Days table.
   a. If the average strength of the lot, based on the three acceptance tests, does not meet the lower acceptance limit shown in the 1.00 pay factor, the Contractor may leave the lot in place at a reduced Unit Price according to the Pay Factor Schedule for Strength Determinations at 28 Days.
   b. If the average strength of the lot does not attain the lower acceptance limit shown for a 0.70 pay factor, the Engineer may order the removal of any or all of the concrete in the lot.

Pay Factor Schedule for Strength Determinations at 28 Days			
Acceptance Limits for Pay Factor Levels			
	1.00 LAL*	0.95 LAL	0.70 LAL
Class SP Concrete	2000 psi (13.8 MPa)+ 0.18 R	2000 psi (13.8 MPa) - 0.07 R	2000 psi (13.8 MPa) - 0.30 R
* Lower Acceptance Limit (LAL)			

The pay factor is 0.50 for concrete that remains in place when outside the 0.70 pay factor limits for compressive strength.

F. Thickness Tolerances

Determine the thickness by measuring the fresh concrete depth at the shoulder edges at least every 500 ft (150 m) of shoulder length.

The Engineer will evaluate areas deficient by more than 1 in (25 mm) thick. If the Engineer requires removal, remove and replace the shoulder pavement in full cross sections according to Plan requirements.

If removal and replacement are not required, payment is made at 50 percent of the Contract Unit Price for areas deficient by more than 1 in (25 mm). Areas that are deficient by more than 0.5 in (13 mm) through 1 in (25 mm) will be paid for at 70 percent of the Contract Price per square yard (meter).

440.3.07 Contractor Warranty and Maintenance

General Provisions 101 through 150.

440.4 Measurement

The work to be paid for under this Item is the number of square yards (meters) of Portland cement concrete shoulders completed and accepted as measured in place. The measurement width is the shoulder width shown on the Plan typical cross-section. The measurement length is along the surface at the inside edge of the paved shoulder.

440.4.01 Limits

General Provisions 101 through 150.

440.5 Payment

The work will be paid for at the Contract Unit Price per square yard (meter). Payment is full compensation for providing materials, reinforcement, equipment, and labor, mixing, hauling, handling, placing, and providing incidentals to complete the work.

Payment will be made under:

Item No. 440	Plain Portland cement concrete shoulders, type___	Per square yard (meter)

440.5.01 Adjustments

The Contract Unit Price per square yard (meter) of concrete shoulder will be adjusted for concrete shoulder accepted with a 28-day compressive strength or thickness deficiency.

If a shoulder section is deficient in thickness and compressive strength, the Contract Unit Price will be adjusted by the total reduction of the application of the two individual percentages shown in the Pay Factor Schedule and Subsection 440.3.06.F, “Thickness Tolerances.”

For combined deficiencies of 50 percent or more, the Engineer may allow the shoulder to stay in place or require its removal. If the Engineer requires shoulder pavement removal, the original pavement nor its removal will be paid for. Pavement replaced satisfactorily will be paid for at the appropriate Unit Price.

Section 441—Miscellaneous Concrete

441.1 General Description

This work includes placing Portland cement concrete as follows:

- As slope paving on end rolls, cut slopes, paved ditches, spillways, and ditch slopes
- In median pavement
- As sidewalks
- In concrete curbs, gutters, curb and gutters, and valley gutters
- As nonreinforced headwalls
- As velocity dissipators and concrete slope drains
- As concrete spillways
- Curb cut wheel chair ramps
- At other locations designated on the Plans or as directed

This work includes subgrade preparations including:

- Fine grading and backfilling
- Forming, furnishing, placing, and finishing concrete
- Constructing weep holes and furnishing and placing the coarse aggregate
- Furnishing and placing preformed joint fillers as shown on the Plans

- Placing driveway concrete as shown on the Plans. Nominal 4 in (100 mm) or 6 in (150 mm) thick as specified or to match existing pavement.

441.1.01 Definitions

General Provisions 101 through 150.

441.1.02 Related References

A. Standard Specifications

Section 209—Subgrade Construction

Section 430—Portland Cement Concrete Pavement

Section 500—Concrete Structures

Section 832—Curing Agents

Section 833—Joint Fillers and Sealers

Section 853—Reinforcement and Tensioning Steel

B. Referenced Documents

General Provisions 101 through 150.

441.1.03 Submittals

General Provisions 101 through 150.

441.2 Materials

Use concrete that conforms to the minimum requirements for Class "B," as specified in Section 500, except that a one-bag mixer may be used. The requirements of Subsection 500.1.03.G, "Cold Weather Concrete Curing and Protection Plan" and Subsection 500.3.05.X, "Pour Concrete in Cold Weather" for cold weather concrete placement are deleted.

Place miscellaneous concrete only when the air temperature is 40 °F (4 °C) and rising. Protect concrete from freezing for the first 24 hours. Hand finishing is allowed.

Other materials and their Specifications are as follows:

Material	Section
Steel Bars for Concrete Reinforcement	853.2.01
Membrane Curing Compound, Type 2	832.2.03
Dowel and Tie Bars and Reinforcing Steel	853.2.03
Joint Fillers and Sealers	833
Welded Steel Wire for Concrete Reinforcement	853.2.07

441.2.01 Delivery, Storage, and Handling

General Provisions 101 through 150.

441.3 Construction Requirements

441.3.01 Personnel

General Provisions 101 through 150.

441.3.02 Equipment

A. Forms

Forms are subject to the Engineer's approval. Use forms that are:

- Wood or metal that is readily available
- Straight and oiled before each use

Use metal divider plates and templates.

Use the slip form placement method when applicable. If the slip form method does not produce a product with the proper quality, shape, grade, or alignment, the Engineer may require using fixed forms.

B. Weep Holes

Provide weep hole drain pockets filled with coarse aggregate to use with weep hole drain pipe or formed openings according to the Plan details.

441.3.03 Preparation

Before placing the concrete, excavate for toe walls, edge walls, and weep hole drain pockets; place coarse aggregate in weep hole drain pockets; and grade, finish, and compact the subgrade surface. Use mechanical tamps for compaction if necessary.

441.3.04 Fabrication

General Provisions 101 through 150.

441.3.05 Construction

A. Extent and Thickness of Pavement

See the Plans to determine the areas to be paved and the dimensions.

Thicknesses are subject to a minus tolerance of 0.5 in (13 mm). Do not perform overlay pours.

B. Preparation of Subgrade

Finish the subgrade for miscellaneous concrete to the line and grade on the Plans and the following:

1. Compact the subgrade to the same degree as the roadway on which it is placed. Compact the subgrade according to Section 209.
2. If a Contract involves a Roadway and a Bridge Contractor, the Roadway Contractor shall complete the grading for the slope paving.

   The Bridge Contractor shall complete final grading, compacting, dressing, placing, and maintenance to the structures until completion.
3. When placing paving on the front slopes of ditches and shoulders, place any required special materials during the roadway construction.
4. Do not excavate for velocity dissipators, spillways, and slope drains below the foundation elevation. Do not excavate wider than necessary to provide working space or to remove soft, unsuitable material. Backfill with selected material.
5. When fitting spillways to concrete pavement, set the specified dowel bars into the pavement when it is laid. Use metal parting strips to hold the ends of dowels bent into the grooves.

C. Concrete

1. Mixing

   Mix Class B concrete as specified in Section 500 with the following exceptions:

   a. Use of small capacity job-site batchers and one-bag mixers is allowed. The rate of concrete placement in Subsection 500.3.05.P, "Meet the Minimum Placement Rates" is waived for miscellaneous concrete.

b. Proportion concrete ingredients volumetrically if the Engineer has approved equipment calibration and operation and the operator is certified by the Office of Materials.

2. Placing and Finishing

Place and finish concrete as follows:

a. Deposit concrete within forms or against other pavements on a compacted and wetted subgrade to the depth to produce the specified thickness.

NOTE: Do not place concrete on a muddy or frozen surface.

b. Vibrate the headwalls.

c. Strike off the concrete to a plane surface and finish it with a Type IV or Type V finish as defined in Subsection 500.3.05.AB, "Finish Concrete" and complete the following:

1) **Concrete Slope Paving.** Give a final finish with a stiff-bristle broom. With the Engineer's approval, mechanically convey the concrete to the forms.

2) **Concrete Sidewalks.** Give a Type V finish unless otherwise noted on the Plans. Test the surface with a 10 ft (3 m) straightedge laid parallel to the center line. Eliminate irregularities greater than 0.25 in (6 mm) per 10 ft (3 m) while the concrete is still plastic.

Ensure that concrete sidewalk constructed as curb cut (wheelchair) ramps has a rough or textured finish.

3) **Concrete Paved Ditches.** Ensure that the surface of the bottom and sides of paved ditches are uniform and true to grade and cross section.

Ensure that straight-grade tangents do not deviate more than 1 in (25 mm) within 10 ft (3 m) when tested with a 10 ft (3 m) straightedge. Do not allow deviation if it reduces the ditch paving thickness, causes water to pond, or alters the direction of flow.

Finish the ditch paving by floating with wood or metal floats to bring mortar to the surface to cover the coarse aggregate.

Use reinforcing that conforms to Plan details if required.

4) **Concrete Curbs, Gutters, and Median.** Finish according to Subsection 441.3.05.C.2, "Placing and Finishing." Remove face forms as soon as possible and finish the exposed surfaces with a wood float.

Use a straightedge to test the edge of the gutter and top of the curb and median to conform to the requirements for the adjacent pavement. Irregularities shall not exceed 0.25 in (6 mm) in 10 ft (3 m).

Place the curb and gutter using a machine as long as the results are satisfactory.

5) **Curb Cut Wheel chair Ramps.** Construct a Type I, II, or III ramp according to Georgia Standard 9031W. Tie ramps into adjacent paved or unpaved sidewalk and use a rough or textured finish.

3. Joints

Follow these procedures to construct joints on slopes, ditches, sidewalks, and curbs, gutters, and medians.

a. Slope Paving

Place paving on slopes in horizontal or vertical courses, but not a mixture of both.

1) Construct horizontal courses approximately level and at least 3 ft (1m) but no more than 6 ft (1.8 m) wide measured along the slope.

When needed, construct trapezoidal courses at the top and bottom to accommodate sloping berm and ditch line conditions.

2) Edge the paving at construction joints between courses with a 0.25 in (6 mm) radius tool.

3) Provide vertical contraction or construction joints spaced along the horizontal course at right angles to the horizontal construction joints at approximately 40 ft (12 m) intervals, in line not staggered.

No other vertical lines will be required in horizontal courses.

When using vertical contraction joints, cut them with a tool one-third the depth of the paving during the finishing operation. Edge the contraction joints the same as construction joints.

Vertical courses approximately equal and at least 3 ft (1 m) but no more than 5 ft (1.5 m) wide across the plane of the slope. The desired width is 4 ft (1.2 m). Horizontal lines are not required in vertical courses.

Separate slope paving from the masonry of structures, sidewalks, curbs, and rigid-type roadway pavements of preformed joint filler that are 0.5 in (13 mm) thick.

b. Concrete Paved Ditches

Form joints in concrete paved ditches as follows:

1) Space contraction joints at 30 ft (9 m) intervals.
2) Place expansion joints only where the paved ditch joins the roadway pavement or some other structure.
3) Do not use joint sealers for expansion or contraction joints.

c. Concrete Sidewalk

Form transverse contraction joints using a tool designed to form a groove one-third the depth of the sidewalk at intervals shown on the Plans.

Where sidewalks abut the curb and gutter, ensure that alternate joints coincide. Round the edges with a 0.25 in (6 mm) edger. Make expansion joints according to the materials, dimensions, and locations specified on the Plans.

d. Concrete Curbs, Gutters, and Medians

Form contraction joints or expansion joints on curbs, gutters, and medians.

1) **Contraction Joints.** Ensure that joints in curb, gutters, and medians are spaced the same as the joints in paving. Form joints by using metal divider plates or sawing them as in Section 430.

Form joints at least one-fifth but not greater than one-fourth the depth of the concrete. Except for sawed joints, finish the joints with a 0.25 in (6 mm) edging tool.

For curbs, gutters, and medians adjacent to pavement other than concrete, contraction joints shall be as follows:

- For header curb and combination curb and gutter, install contraction joints spaced no more than 20 ft (6 m) apart.
- For gutter median, install a contraction joints spaced no more than 20 ft (6 m) apart.

2) **Expansion Joints.** Form expansion joints according to the Plan details or as directed. Ensure that they coincide with the expansion joints in the adjoining pavement or gutter.

Cut the joint fillers to the same cross section as the construction. Trim flush the material that protrudes after the concrete is finished.

When miscellaneous concrete items are not adjacent to concrete construction, provide expansion joints at an interval of at least 500 ft (150 m).

e. Curb Cut Wheelchair Ramps

Locate and form expansion joints for curb cut wheelchair ramps according to the Special Details for ramp Type A, B, C, or D.

4. Curing

Use curing methods specified in Subsection 430.3.05.L, “Cure the Concrete.” Ensure that the membrane curing compound is Type 2, if used. Pack honeycombed areas immediately after removing the forms.

D. Backfilling

Backfill the areas as soon as possible without damaging the work.

E. Clean-Up

When concrete work is complete, clean each surface. Protect the work from stains or other damage until Final Acceptance.

441.3.06 Quality Acceptance

General Provisions 101 through 150.

441.3.07 Contractor Warranty and Maintenance

General Provisions 101 through 150.

441.4 Measurement

A. Concrete Slope Paving

Concrete slope paving is measured for payment in square yards (meters) of accepted surface area of paving of the specified thickness. Concrete in toe or edge walls, excavation, backfill, weep holes, and aggregates are not measured for separate payment.

B. Concrete Sidewalks

Concrete sidewalks are measured in square yards (meters) of the specified thickness, complete in place and accepted. The length is the actual measured length along the surface. The width is the Plan width or as directed. Excavation and backfill are not measured separately for payment.

C. Concrete Paved Ditches

The area measured for payment is the square yards (meters) of exposed surface area, exclusive of top edges, of the specified thickness placed according to the Plans or as directed. Reinforcing steel, excavation, preparation of subgrade including Type I backfill, forms, and concrete in toe or edge walls are not measured separately for payment.

Type II backfill, when required, will be paid according to Section 207.

D. Concrete Curbs, Gutter, Median, Pavement, and Combination Curb and Gutter

The following are measured by the linear foot (meter) along the face of the curb:

- Concrete curb and gutter
- Concrete curb
- Concrete header curb

The following are measured by the square yard (meter) or by the linear foot (meter), whichever is specified:

- Concrete gutter
- Concrete valley gutter
- Concrete valley gutter with curb
- Concrete median pavement
- Concrete gutter with raised edge

The length used to compute the square yards (meters) or linear foot (meter) is measured along the center line of the gutter. The width is the total width of the gutter including the curb or raised edge. Concrete doweled integral curb includes dowels.

E. Concrete Headwalls

Headwalls are measured for payment according to Subsection 500.4.01.B, “Payment per Cubic Yard (Meter)” and Subsection 500.5.01.E, “Filler Concrete.” Filler concrete, where required, will be paid for at 60 percent of the Contract Unit Price for Class B concrete.

F. Concrete Spillways

Concrete spillways regardless of the type specified are measured by the actual number poured complete and accepted.

G. Concrete Slope Drains

Concrete slope drains are measured in square yards (meters) along the surface, complete and accepted.

H. Velocity Dissipators

Velocity dissipators are measured in square yards (meters), surface measure, complete and accepted.

I. Concrete Driveways

Driveway pavement is measured along the surface from the paving edge or back of the curb to where old and new concrete join. The width is the average width constructed.

J. Curb Cut Wheelchair Ramps

For new construction, curb cut wheelchair ramps will not be measured. For new construction, linear feet (meters) of curb and gutter will include the transitioned curb in front of ramps and square yards (meters) of concrete sidewalk will include ramps. No additional payment will be made for curb cut ramps.

For existing sidewalks, curb cut wheelchair ramps are measured as the actual number formed and poured, complete and accepted. No additional payment will be made for sawing existing sidewalk and removal and disposal of removed material for new ramp construction.

441.4.01 Limits

General Provisions 101 through 150.

441.5 Payment

These Items, measured as specified above, will be paid for at the Contract Unit Price per each, per square yard (meter), per linear foot (meter), or per cubic yard (meter).

Payment will be made under:

A. Slope Paving

Item No. 441	Concrete slope paving [thick] in (mm)	Per square yard (meter)

B. Sidewalks

Item No. 441	Concrete sidewalk (thick) in (mm)	Per square yard (meter)

C. Concrete Ditches

Item No. 441	Plain concrete ditch paving (thick) in (mm)	Per square yard (meter)
Item No. 441	Reinforced concrete ditch paving (thick) in (mm), including reinforcing steel	Per square yard (meter)

D. Curbs, Gutters, Combination Curb and Gutter, Headers, and Medians

Item No. 441	Concrete curb and gutter, (thick) in (mm)x (width) in (mm)type___	Per linear foot (meter)
Item No. 441	Concrete header curb, [height] in (mm), type___	Per linear foot (meter)
Item No. 441	Concrete valley gutter, [thick] in (mm)	Per square yard (meter)
Item No. 441	Concrete valley gutter with curb, [thick] in (mm)	Per square yard (meter)
Item No. 441	Concrete gutter with raised edge, [thick] in (mm)	Per square yard (meter)
Item No. 441	Concrete median [thick] in (mm)	Per square yard (meter)
Item No. 441	Concrete median, corrugated [thick] in (mm)	Per square yard (meter)

Item No. 441	Concrete doweled integral curb, type___ including dowels	Per linear foot (meter)

E. Spillways, Drains and Velocity Dissipators

Item No. 441	Concrete spillway type___	Per each
Item No. 441	Concrete slope drain	Per square yard (meter)
Item No. 441	Velocity dissipators	Per square yard (meter)

F. Headwalls

Item No. 441	Concrete headwalls	Per cubic yard (meter)

G. Driveway Concrete

Item No. 441	Driveway concrete___ in (mm)thick	Per square yard (meter)

H. Curb Cut Wheelchair Ramps

Item No. 441	Curb cut wheelchair ramps, Type__	Per each

441.5.01 Adjustments

General Provisions 101 through 150.

Section 442—Roller Compacted Concrete Pavement

442.1 General Description

Specifications for this work will be included elsewhere in the Contract.

Section 443—Elastomeric Profile Bridge Joint Seals

443.1 General Description

Specifications for this work will be included elsewhere in the Contract.

Section 444—Sawed Joints in Existing Pavements

444.1 General Description

This work includes sawing joints in existing Portland cement concrete pavements such as roadway pavements, intersections, driveways, parking areas, and sidewalks when removing existing pavements is shown on the Plans or required by the Engineer.

444.1.01 Definitions

General Provisions 101 through 150.

444.1.02 Related References

A. Standard Specifications

General Provisions 101 through 150.

B. Referenced Documents

General Provisions 101 through 150.

444.1.03 Submittals

General Provisions 101 through 150.

444.2 Materials

General Provisions 101 through 150.

444.2.01 Delivery, Storage, and Handling

General Provisions 101 through 150.

444.3 Construction Requirements

444.3.01 Personnel

General Provisions 101 through 150.

444.3.02 Equipment

A. Mechanical Saw

Use an adequately powered, water-cooled, mechanical saw with a diamond-edge blade or an abrasive wheel that will cut a straight joint to the required depth.

The Engineer may require that a guide be used with the saw to produce a satisfactory joint.

444.3.03 Preparation

General Provisions 101 through 150.

444.3.04 Fabrication

General Provisions 101 through 150.

444.3.05 Construction

A. Joints

Saw joints true to the lines designated by the Engineer.

Saw the joints at least 2 in (50 mm) deep, or deeper if the Engineer directs, to remove pavement along true lines and to prevent spalling or overbreaking of pavement that will remain in place.

Saw with diamond blades. Do not dry saw with abrasive blades.

B. Removal of Pavement

After joints have been sawed to completely isolate a pavement to be removed:

1. Begin removing the pavement.
2. Protect the edges of the pavement that will remain. Do not use removal methods that may damage these edges.

C. Traffic Control

After removing the pavement, do not allow traffic or other equipment to cross the exposed edges of the remaining pavement until new pavement is constructed in its place.

444.3.06 Quality Acceptance

General Provisions 101 through 150.

444.3.07 Contractor Warranty and Maintenance

General Provisions 101 through 150.

444.4 Measurement

The length of sawed joints measured for payment is the actual linear feet (meters) of joints acceptably sawed.

444.4.01 Limits

General Provisions 101 through 150.

444.5 Payment

Sawed joints as described above will be paid for at the Contract Unit Price per linear foot (meter).

Payment will be made under:

Item No. 444	Sawed joints in existing pavements	Per linear foot (meter)

4444.5.01 Adjustments

General Provisions 101 through 150.

Section 445—Waterproofing Pavement Joints and Cracks

445.1 General Description

This work includes waterproofing joints and cracks in the pavement by cleaning the existing surface and placing a membrane over joints and random cracks as shown on the Plans.

445.1.01 Definitions

General Provisions 101 through 150.

445.1.02 Related References

A. Standard Specifications

Section 150—Traffic Control

Section 400—Hot Mix Asphaltic Concrete Construction

Section 888—Waterproofing Membrane Material

B. Referenced Documents

General Provisions 101 through 150.

445.1.03 Submittals

General Provisions 101 through 150.

445.2 Materials

Use membranes that meet the requirements of Subsection 888.2.02. For a list of sources, see QPL 22.

445.2.01 Delivery, Storage, and Handling

General Provisions 101 through 150.

445.3 Construction Requirements

445.3.01 Personnel

General Provisions 101 through 150.

445.3.02 Equipment

General Provisions 101 through 150.

445.3.03 Preparation

A. Bituminous Tack Coat

Place bituminous tack coat on:

- Portland cement concrete
- Old asphaltic concrete surfaces

The Engineer will determine when to place bituminous tack coat on new asphaltic concrete surfaces. When self adhesive waterproofing fabric is applied on existing surfaces, a bituminous application will not be necessary.

Before placing the membrane:

1. Prime the surface according to the manufacturer's recommendations.
2. Correct spalls greater than 3 in. (75 mm) in diameter that will prevent the material from bonding to the pavement or that will leave a cavity under the material.

   Repair spalls using asphaltic concrete that meets the requirements of Section 400 or other materials such as cold mixes approved by the Engineer.
3. Place the primer on the surface at the rate specified by the primer manufacturer. Extend it 1 in (25 mm) wider than the membrane. Before applying the membrane, allow the primer to dry until it is tack-free.
4. Cover the sections that are primed with membrane within the same day or repriming will be required.

445.3.04 Fabrication

General Provisions 101 through 150.

445.3.05 Construction

A. Placing the Membrane

Place the membrane on joints and cracks over concrete pavements on interstate mainline and ramps and designated state routes that will be surfaced with asphaltic concrete, unless otherwise noted on the Plans.

1. Place the membrane only when the temperature is above 40 ºF (4 ºC) and the pavement surfaces are dry and free of dirt or debris.
2. Install the membrane in widths of at least 11-3/8 in (290 mm) and center them over the joint or crack within a 2 in (50 mm) tolerance.
3. Seal joints as follows:
   a. Seal transverse joints and cracks first, starting at the outside edge of the pavement and extending the full length of the joints.
   b. Seal the longitudinal joint(s) after the transverse joints, placing the membrane in the direction that the Project will be paved.

   If laps are needed, place them in the transverse and longitudinal membranes with an overlap of at least 2.5 in (65 mm).

4. Install the membrane straight and wrinkle-free with no curled or uplifted edges. Slit and fold down wrinkles over 3/8 in (10 mm) wide.
5. Press the membrane against the concrete or asphalt surface using a hand roller or other equipment to ensure proper bonding.
6. Bond the edges and corners of the strips securely to the surface. Before placing the overlay, rebond or replace strips that have loose edges or corners at no expense to the Department.
7. Place the asphaltic concrete overlay when the membrane surface is dry.
8. Traffic will be allowed to enter the section between the time of placing the membrane and placing the paving, for a maximum of 7 calendar days. Before paving, replace damaged or disbonded membrane at no additional cost to the Department.
9. Fill joints or cracks flush with the pavement if they are wider than 0.5 in (13 mm) or deeper than 3/8 in (10 mm) and not adequately filled to provide support for the membrane over the joint. Use PG 64-22 asphalt cement, hot pour, or other approved sealant material before placing the membrane as directed by the Engineer.
10. Clean the joint to remove dirt and debris before filling the joint. Comply with the short-term pavement marking requirements of Section 150.

445.3.06 Quality Acceptance

General Provisions 101 through 150.

445.3.07 Contractor Warranty and Maintenance

General Provisions 101 through 150.

445.4 Measurement

The membrane quantity, complete in place and accepted, is measured in linear feet (meters). The length for transverse joints waterproofed is based on the typical cross section in the Plans, except that, where widening occurs for extra lanes, field measurements are made to determine the exact length waterproofed.

The length for longitudinal joints and random cracks waterproofed are measured in place along the center line of the joint on the surface of the pavement. No allowance is made for laps.

445.4.01 Limits

General Provisions 101 through 150.

445.5 Payment

Payment will be made at the Contract Unit Price per linear foot (meter) of joint and crack waterproofed, which will include cleaning the surface and furnishing and placing the primer and membrane.

Payment will be made under:

Item No. 445	Waterproofing pavement joints and cracks (width)	Per linear foot (meter)

445.5.01 Adjustments

General Provisions 101 through 150.

Section 446—Placement of Pavement Reinforcement Fabric

446.1 General Description

This work includes installing Type II pavement reinforcement fabric and high strength pavement reinforcement fabric over cracks, joints, and patches in existing asphaltic concrete pavement. Install the fabric in strips or full width before placing an overlay where shown on the Plans or as directed by the Engineer. Install high strength pavement reinforcement fabric on asphaltic concrete interstate projects.

446.1.01 Definitions

General Provisions 101 through 150.

446.1.02 Related References

A. Standard Specifications

Section 150—Traffic Control

Section 400—Hot Mix Asphaltic Concrete Construction

Section 413—Bituminous Tack Coat

Section 881—Fabrics

B. Referenced Documents

General Provisions 101 through 150.

446.1.03 Submittals

General Provisions 101 through 150.

446.2 Materials

Use the reinforcement fabric that meets the requirements of Subsection 881.2.06.

Bituminous binder materials, when required, shall meet the requirements of Section 413, “Bituminous Tack Coat”.

446.2.01 Delivery, Storage, and Handling

General Provisions 101 through 150.

446.3 Construction Requirements

446.3.01 Personnel

General Provisions 101 through 150.

446.3.02 Equipment

A. Template

When using fabric strips, use a template or other method satisfactory to the Engineer to apply the bituminous tack coat uniformly.

B. Mechanical Device

Use a mechanical device approved by the Engineer when placing the fabric full width on the pavement to ensure the fabric is placed smooth, free of wrinkles, and with no uplifted edges.

C. Roller

Place the fabric in total contact with the underlying pavement. Roll the fabric with a static drum or pneumatic roller to ensure adequate adhesion to the pavement surface.

446.3.03 Preparation

Before an existing pavement surface is milled, mark the location of joints and cracks with an offset reference so that they can be located after milling has been completed.

A. Cleaning the Pavement

Immediately before applying the bituminous tack coat, clean the pavement surface to remove rocks, dirt, debris, and other materials that may prevent a clean bonding surface.

B. Repairing Potholes, Spalls, or Cracks

Before placing the fabric, repair potholes, spalls, or cracks greater than 3/16 in (5 mm) wide. Repair spalls and potholes using asphaltic concrete that meets the requirements of Section 400 or other materials such as cold mixes approved by the Engineer.

Fill cracks with PG 64-22 asphalt cement or other materials approved by the Engineer.

446.3.04 Fabrication

General Provisions 101 through 150.

446.3.05 Construction

Do not install reinforcement fabric when ambient temperatures are less than 45 °F (7 ºC).

Use a bituminous tack coat when temperatures are between 45°F (7 ºC) and 70°F (21ºC) for all reinforcement fabric types.

When ambient temperatures are a minimum of 70 °F (21 ºC) and rising, reinforcement fabric with a self-adhesive backing may be installed at the Contractor's option without applying a bituminous tack coat except when the fabric is placed on a milled surface.

Use a bituminous tack coat when fabric is placed on a milled surface regardless of the temperature.

A. Applying Bituminous Binder

Use a bituminous tack coat to bond self-adhesive fabric to the pavement and apply the bituminous tack coat at a rate of 0.10 gal/yd² (0.45 L/m²) over non-milled surfaces and 0.20 gal/yd² (0.90 L/m²) over milled surfaces. Heat the bituminous tack coat and apply within a temperature range of 350 °F to 375 °F (175 ºC to 190 ºC).

Use bituminous tack coat to bond non-self-adhesive fabric to the pavement and apply at a rate of 0.10 gal/yd² (0.45 L/m²) over non-milled surfaces and 0.25 gal/yd² (1.13 L/m²) over milled surfaces. Heat the bituminous tack coat and apply within a temperature range of 350 °F to 375 °F (175 ºC to 190 ºC).

Where using fabric strips, use a template or other method satisfactory to the Engineer to apply bituminous tack coat uniformly.

Do not allow the width of the bituminous tack coat applied to exceed the width of the fabric by more than 1 in (25 mm) on each side.

B. Placing the Fabric

For self-adhesive reinforcement fabric, remove the release liner of the fabric and place the adhesive side to the pavement. Place self-adhesive reinforcement fabric no more than 24 hours in advance of the paving operation to ensure proper adhesion of the fabric to the pavement.

Place non-self-adhesive reinforcement fabric at least 1 hour but no more than 24 hours in advance of the paving operation to ensure proper adhesion of the fabric to the pavement. Place fabric on the pavement immediately after the bituminous tack coat has been applied to the pavement. Place the non-woven polyester side of the fabric on the pavement.

Install the fabric so that it is smooth, free of wrinkles with no uplifted edges. Provide a minimum of 5 in (125 mm) overlap on all sides of the repair area. Center the material over the repair area within a 2 in (50 mm) tolerance. When placed full width, use a mechanical device approved by the engineer to place the fabric on the pavement.

Immediately after the fabric is placed on the pavement, ensure that the fabric is in total contact with the underlying pavement. Roll the material with a static drum or pneumatic roller to ensure adequate adhesion to the pavement surface.

Any fabric with loose edges, corners or other improperly bonded areas shall be replaced at the expense of the Contractor prior to placement of the overlay or opening the fabric section to traffic.

C. Overlapping Fabric

If more than one strip of fabric is required to cover the repair area, the seams that are created shall be butt or lapped seams. When waterproofing is required, use lap seams with a minimum 2 in (50 mm) overlap. Make all lapped seams in the direction of the paving operation to prevent pickup by the paving train. The width of the fabric strips shall be shown on the plans.

Make joint overlaps to prevent pickup by the paving train that places the asphaltic concrete.

D. Protecting Fabric

When full width fabric is used, schedule work so that the fabric will be covered with asphaltic concrete prior to reopening the section to traffic. Do not allow traffic, other than necessary construction equipment or emergency vehicles, on unprotected fabric. If approved by the Engineer, traffic will be allowed to use a section with applied fabric strips for a maximum of 7 days. Coordinate all activities to conform to this restriction. Replace any damaged fabric prior to paving at the Contractor's expense. When short-term pavement markings are required, the markings shall meet the requirements of Section 150.

When in-place fabric is exposed to moisture prior to application of the overlay, make sure the fabric is completely dry before the overlay is placed.

If the fabric sticks to tires of trucks or paving equipment during the construction overlays, hot mix asphalt may be broadcast over the fabric for protection.

E. Placing Overlay

Use an asphaltic concrete overlay that meets the requirements of Section 400.

Prior to placement of the overlay, apply a bituminous tack coat over the fabric at a rate determined by the Engineer as described in Subsection 400.3.03.A.3.

The minimum thickness of asphaltic concrete over the strip shall be 2 in (50 mm). Milling may be required to provide the minimum thickness.

When using a vibratory roller for compaction, avoid the use of excessive amplitude. The use of excessive amplitude during the compaction process may result in an undesirable riding surface.

446.3.06 Quality Acceptance

General Provisions 101 through 150.

446.3.07 Contractor Warranty and Maintenance

General Provisions 101 through 150.

446.4 Measurement

The reinforcement fabric complete, in place, and accepted is measured by the square yard (meter) for full-width fabric, or by the linear foot (meter) for fabric strips. No allowance will be made for laps.

446.4.01 Limits

General Provisions 101 through 150.

446.5 Payment

Payment will be made at the Contract Unit Price per square yard (meter) or per linear foot (meter) of reinforcement fabric as shown in Subsection 446.4, "Measurement."

Payment is full compensation for the work specified in this section, including cleaning the surface and furnishing and placing the pavement reinforcement fabric.

Payment for Pavement Reinforcing Fabric Strips also includes all milling required to place the fabric according to the plans.

Payment will be made under:

Item No. 446	Pavement Reinforcement Fabric Strips, Type II, 18 inch (450 mm) Width	Per linear foot (meter)
Item No. 446	Pavement Reinforcement Fabric Full Width, Type II	Per square yard (meter)
Item No. 446	High Strength Pavement Reinforcement Fabric, 18 inch (450 mm) Width	Per linear foot (meter)

446.5.01 Adjustments

General Provisions 101 through 150.

Section 447—Modular Expansion Joints

447.1 General Description

Specifications for this work will be included elsewhere in the Contract.

Section 448—Portland Cement Concrete End Dams and Patches

448.1 General Description

Specifications for this work will be included elsewhere in the Contract.

Section 449—Bridge Deck Joint Seals

449.1 General Description

This work consists of furnishing and installing bridge deck joint sealing systems at the locations shown on the Plans.

These bridge deck joint sealing systems consist of a joint seal and may include concrete headers. Use a joint seal material that conforms to one of the following:

- A preformed elastomeric neoprene profile seal, or
- A low-density, closed cell, cross-linked, ethylene vinyl acetate, polyethylene copolymer, nitrogen-blown seal.

Use either epoxy concrete or elastomeric concrete for header material. Mix and use elastomeric and epoxy concrete material according to the manufacturer's guidelines.

449.1.01 Definitions

General Provisions 101 through 150.

449.1.02 Related References

A. Standard Specifications

Section 106—Control of Materials

Section 501—Steel Structures

B. Referenced Documents

GDT 111

ASTM A 36

ASTM D 395

ASTM D 570

ASTM D 588

ASTM D 624

ASTM D 638

ASTM D 1299

ASTM D 2240

ASTM D 2628

ASTM D 4070

449.1.03 Submittals

A. Working Drawings

Furnish working drawings covering the proposed joint installation. Before the joint is installed, the Bridge Engineer will review these drawings and indicate this review on the drawings.

The Department is not responsible for the accuracy of the drawings.

Assume responsibility for conforming to the Specifications and Plans. Include these items in the submission:

- Manufacturer's brochure on the proposed joint, showing component physical dimensions, installation procedures, material certifications, and a table of variable temperatures and dimensions
- Drawings that detail the joint installation and indicates the length of component members, treatment of directional changes, and field splicing of steel locking rails
- Expansion joint fabricator documentation

Ensure that the expansion joint fabricator is AISC Category I, shop approved. Supply documentation with the shop drawings.

B. Submissions for Preformed Elastomeric Neoprene Profile Seals

Furnish the manufacturer of the performed elastomeric neoprene profile seal a working drawing for each installation. This drawing shall include all of the following information:

- Identification and orientation of each joint
- Length of each joint including a minimum 6 in (150 mm) turn up at both barrier faces
- Total projected movement range of the joint
- Use a full-length seal if a full bridge width installation can be made. If traffic conditions require that the joint seal installation be in stages, indicate the splice points

In addition to the above, if existing edge beams are to remain as joint headers, furnish the manufacturer of the seal the following:

- Joint width measurements taken at 2 ft (600 mm) intervals along the full length of the joint plus a measurement of the joint width of each barrier in the area of the turn ups
- Ambient temperature, taken when width measurements are made

Have the manufacturer of the preformed elastomeric neoprene profile seal use this information to determine quantities of materials needed and the profile size or sizes for each joint.

Have the manufacturer enter this data on the working drawing, and verify that the data is accurate and submit a copy to the Engineer for review. Show an indication of such verification on the drawings.

Engineer approval is required before installing the joint seal. The Department review will be considered a service to assist the Contractor. The Department will assume no responsibility for the accuracy of the drawings, and the Contractor will not be relieved of any responsibility for conforming to the Specifications and Plans.

449.2 Materials

A. Elastomeric Concrete Material

Elastomeric concrete material includes two-component elastomer and prebagged fillers. Mix the elastomeric concrete material and use it according to the manufacturer's recommendations. This may require using heat to accelerate curing and ensure a quality bond to the concrete and steel.

Use the Elastomeric Concrete Material with these features:

- Compatible with the concrete and steel to which it is bonded
- Smooth riding surface across the joint
- Can be mixed using normal equipment

Can be mixed and placed between 45 ºF to 100 ºF (7 ºC to 38 ºC)B. Joint Sealing System

Use a joint sealing system designed for HS 20 truck loading and impact according to AASHTO design parameters. Ensure that the system can accommodate the movements indicated in the Plans.

C. Preformed Elastomeric Neoprene Profile Seal

The preformed elastomeric neoprene profile seal shall as a minimum:

- Have the capability to be evacuated of air during installation
- Have the capability to be pressurized with air during the adhesive curing time
- Be compatible with the epoxy and elastomeric concrete header materials (if required)
- Be designed to withstand 50% expansion, 50% contraction (total 100%)
- Withstand the effects of vertical and lateral movements, skew movement and rotational movement without adhesive or cohesive failure.

Ensure the preformed elastomeric neoprene profile meets the requirements of ASTM D 2628.

Ensure the adhesive used with the preformed elastomeric neoprene profile seals is a two-component epoxy based thixotropic paste meeting the seal manufacturer's requirements.

D. Low-Density, Closed Cell, Cross-Linked, Ethylene Vinyl Acetate, Polyethylene Copolymer, Nitrogen-Blown Seal

The low-density, closed cell, cross-linked, ethylene vinyl acetate, polyethylene copolymer, nitrogen-blown seal shall as a minimum be:

- Held in place by a two-component, 100% solid, modified epoxy adhesive.
- Compatible with the epoxy and header materials.

- Preformed, resistant to abrasion, oxidation, oils, gasoline, salt, and other materials that may be spilled on or applied to the surface.
- Grooved, with the grooves approximately 1/8 in. (3 mm) wide by 1/8 in. (3 mm) deep and spaced between 1/4 in. to 1/2 in. (6 mm to 13 mm) apart, and run along the entire length of the bond surface side of the seal.
- Designed so that, when compressed to 50% of original width, the center portion of the top will not extend upward above the original height of the seal by more than 1/4 in. (6 mm).
- Recessed below the riding surface throughout the normal limits of joint movement.
- Resistant to ultra violet rays.
- Beige or gray color.
- Shop marked to indicate the top or bottom side of the seal in such a way as to be clearly visible during installation.

Ensure the low-density, closed cell, cross-linked, ethylene vinyl acetate, polyethylene copolymer, nitrogen-blown seal has a working range of 30% tension and 60% compression.

Ensure the seal meets the following physical properties:

Test	Requirements	Test Method
Tensile Strength	50 psi (345 kPa)	ASTM D3575 (Suffix T)
Elongation at break	255% min.	ASTM D3575 (Suffix T)
Weather/Deterioration	No deterioration for at least 8 years	AASHTO T42 (Accelerated Weathering)
Compression/Deflection	10 psi (69 kPa) min., 60 psi (414 kPa) max. @ 50% deflection of original width	ASTM D3575 (Suffix B)
Tear Strength	13 psi (90 kPa)	ASTM D624
Density	2.8 to 3.4 pcf (45 to 54 kg/m^3)	ASTM D545

The adhesive used with the low-density, closed cell, cross-linked, ethylene vinyl acetate, polyethylene copolymer, nitrogen-blown seals shall be a two-component, 100% solid, modified epoxy adhesive meeting the requirements of ASTM C881, Type I, Grade 2, Class B & C.

The adhesive shall also have the following physical properties:

Tensile Strength	3500 psi (24 MPa) min.
Compressive Strength	7000 psi (48 MPa) min.
Shore D Hardness	75 psi (0.5 MPa) min.
Water Absorption	0.25% by weight

For applications on moist or hard to dry concrete surfaces, the adhesive shall be as specified by the joint material manufacturer.

E. Epoxy Concrete Material

Ensure the epoxy concrete material is as a minimum:

- Compatible with all allowable joint seal materials, and concrete or steel to which it is bonded.
- Capable of providing a smooth riding surface across the joint.
- Capable of being mixed using normal equipment.
- Capable of being mixed and placed at temperatures of 55 ºF (13 ºC) and above.

.

Use header material that is a two-component rapid curing epoxy with aggregate that cures to a dense semi-flexible, weather, abrasion, and impact-resistant epoxy concrete.

Ensure the material has the following physical properties:

Test	Requirements	Test Method
Mixed Epoxy without Aggregate: (Before and after oven aging at 158° F (70° C) for 72 hours)		
Tensile Strength (min.)	900 psi (6.2 MPa)	ASTM D 638
Elongation at Break (min.)	40%	ASTM D 638
Shore "D" Hardness	45-75	ASTM D2240
Pot Life (max.)	45 minutes	GDT 111
Mixed Epoxy with Aggregate:		
Compressive Strength at 24 hours (min.)	2,500 psi (17.2 MPa)	ASTM C-39 (3" cylinders)
Resilience at 5% Deflection (min.)	75%	GDT 111
Bond Strength to Concrete (min.*)	375 psi (2.6 MPa)	GDT 111
Wet Bond Strength to Concrete (min.*)	250 psi (1.7 MPa)	GDT 111
Thermal Compatibility	No Delamination	ASTM C 884
*Minimum psi or concrete failure.		

Have the manufacturer furnish the aggregate used in epoxy concrete. Use well-graded, clean and dry aggregate meeting the following gradation requirement:

Size	Percent Passing by Weight
No. 4 Sieve	100
No. 80 Sieve	0-5

Note: Test according to AASHTO T 27.

F. Elastomeric Concrete Material

Ensure the elastomeric concrete material is as a minimum:

- Compatible with all allowable joint seal materials and concrete or steel to which it is bonded.
- Provides a smooth riding surface across the joint.
- Capable of being mixed using normal equipment.
- Capable of being mixed and placed between 45 ºF and 100 ºF (7 ºC and 38 ºC).

G. Elastomeric Concrete Cured Binder Material

Ensure elastomeric concrete cured binder material (without filler) has the following physical properties:

Test	Requirements	Test Method
Before oven aging:		
Tensile strength (min.)	750 psi (5.2 MPa)	ASTM D 638
Elongation at break	200 – 350%	ASTM D 638
Hardness Type D durometer	38, ± 8	ASTM D 2240
Compression set, 22 hrs at (max.) 158° F (70° C)	50%	ASTM D 395 Method B
Tear resistance (min.)	150 lbs/in (2.7 kg/mm)	ASTM D 624—2 in/min (50 mm/min)
Water absorption (max.)	1.2%	ASTM D 570
Heat shrinkage (max.)	1.6%	ASTM D 1299
Impact strength (min.)	7 ft-lbs/min (9.5 N ·m)	GDT 111
Properties after oven aging at 158° F (70° C) for 72 hrs:		
Tensile strength (min.)	750 psi (5.2 MPa)	ASTM D 638
Elongation at break	150 – 350%	ASTM D 638
Hardness Type D durometer	42, ± 5	ASTM D 2240
Impact strength (min.)	7 ft-lbs/min (9.5 N ·m)	GDT 111

H. Elastomeric Concrete Binder Material

Ensure that the elastomeric concrete binder material (with filler) has the following physical requirements:

Test	Requirements	Test Method
Resilience at 5% deflection (min.)	80%	GDT 111
Bond strength to concrete (min.*)	375 psi (2.6 MPa)	GDT 111
Wet bond strength to concrete (min.*)	250 psi (1.7 MPa)	GDT 111
Pot life (min.)	5 minutes	GDT 111
*Minimum psi (MPa) or concrete failure		

I. Temporary Joint Filler

Use temporary joint filler when epoxy concrete material is used. The temporary joint filler shall be an extruded rigid cellular polystyrene with enough compressive strength to maintain the correct joint width and to obtain relatively smooth and straight faces upon removal of the material.

449.2.01 Delivery, Storage, and Handling

General Provisions 101 through 150.

449.3 Construction Requirements

449.3.01 Personnel

General Provisions 101 through 150.

449.3.02 Equipment

General Provisions 101 through 150.

449.3.03 Preparation

A. Surface Preparation

Ensure that the compressed air used to sandblast and/or blow debris is free of moisture and oil. Use air compressors for cleaning joints that are equipped with suitable traps capable of removing surplus water and oil in the compressed air. Check the compressed air daily for contamination. Do not use contaminated air. Use a compressor that can deliver compressed air at a continuous pressure of at least 90 psi (620 kPa)..

1. **Preparation for Headers**:

   Remove loose, eroded, and unsound concrete from the surface within the joint area. Provide horizontal bonding areas by cutting all angular areas of concrete blockouts. Immediately before placing the epoxy or elastomeric concrete, sandblast the concrete surfaces or abrade free of oil, dust, dirt, traces of asphaltic concrete, or other contaminants.

2. **Preparation for Joint Seal**:

   Remove loose, eroded, and unsound concrete from the surface within the joint area. Immediately before placing the seal, sandblast the concrete surfaces or abrade free of oil, dust, dirt, traces of asphaltic concrete, or other contaminants. Saw-cutting of the concrete deck maybe necessary to provide an acceptable attachment surface for the joint seal.

449.3.04 Fabrication

A. Joint Fabrication

Have the joint fabricated full width of the bridge deck, except in stage construction (one lane at a time) or when joint length prohibits shipment.

449.3.05 Construction

Use an installer trained by the manufacturer to install the bridge deck joint sealing system. A manufacturer's representative shall be present during the installation of the epoxy or elastomeric concrete headers. Install the joint system according to the manufacturer's recommendations and the following:

A. Blockouts

Blockouts shall be according to the Plan details.

B. Weather Limitations

Do not perform any part of the installation in rainy weather or when rain is expected within one hour of installation.

Ensure the surface is completely dry before applying adhesive or primer.

The ambient temperature must not be less than 55 ºF (13 ºC) during installation of the epoxy concrete material and preformed elastomeric neoprene profile seal.

Ensure the ambient temperature is between 45 ºF (7 ºC) and 100 ºF (38 ºC) while installing the elastomeric concrete material.

Ensure the ambient and surface temperatures are between 45 ºF (7 ºC) and 75 ºF (24 ºC) while installing the low-density, closed cell, cross-linked, ethylene vinyl acetate, polyethylene copolymer, nitrogen blown seal.

C. General Safety, Handling, Mixing, Finishing, and Curing

Handle, place, finish, and cure elastomeric concrete joint systems according to the manufacturer's instructions and the following:

1. Fill the blockout, as shown in the Plans, to the correct grade.
2. After filling the blockouts on both sides cure the material according to the manufacturer's instructions.

Mix and place the epoxy mortar according to the manufacturer's recommendations and the following:

1. Before adding the aggregate, thoroughly mix the two components (resin and hardener) of the epoxy mortar.
2. Mix the epoxy mortar in a mechanical mortar mixer by combining one volume of mixed epoxy (resin plus hardener in the required proportions) with three volumes of aggregate meeting the requirements of this Specification.
3. Prime the surface of the concrete in accordance with the manufacture's recommendations before applying the epoxy concrete.
4. Place and finish the epoxy concrete within one half hour of mixing.

The cure time of epoxy mortar is directly related to temperature. Use the following table as a general guideline for cure time at various temperatures.

Air and Deck Temperature ^{o}F (^{o}C)	Approximate Cure Time (hours)
40 (4)	5
50(10)	4
60(16)	3
70(21)	2.5
80(27)	1.5
90(32)	1
100(38)	0.75

Postpone the installation process if the ambient temperature is not 55 ºF (13 ºC) and rising. If you cannot postpone the operation, use supplemental heat to complete the operation and reopen the lane in a reasonable time. If using supplemental heat, ensure that the cure has progressed throughout the mass of the header.

D. Mixing and Placing Elastomeric Concrete Material

Handle, place, finish, and cure the elastomeric concrete material according to the manufacturer's instructions. Allow the elastomeric concrete to cool and solidify for at least one hour before opening to traffic.

E. Preformed Elastomeric Neoprene Profile Joint Seal Application

1. After the epoxy or elastomeric concrete has developed enough strength to be traffic ready, remove the temporary joint filler (when called for) and thoroughly clean the joint faces of all joint filler.
2. Lightly sandblast the joint to remove all residue.
3. Apply the adhesive according to the manufacturer's recommendations.
4. Install the preformed elastomeric neoprene profile seal so that it is recessed approximately 1/4 inch (6 mm) below the riding surface.
5. After a joint has been sealed, promptly remove all surplus residue on the bridge deck.

F. Low-Density, Closed Cell, Cross-Linked, Ethylene Vinyl Acetate, Polyethylene Copolymer, Nitrogen-Blown Seal Application

1. After the epoxy or elastomeric concrete (if required) has developed enough strength to be traffic ready, remove the temporary joint filler (when called for) and thoroughly clean the joint faces of all joint filler.
2. Lightly sandblast the joint to remove all residue.
3. Apply the epoxy adhesive to both sides of the joint opening and into the grooves of the joint seal material.
4. Splice the seal using the heat welding method by placing the joint seal material ends against a Teflon heating iron of 350 °F (177 °C) for 7-10 seconds and pressing the ends together tightly.

5. Install the joint seal material in one piece.
6. Begin installation at the low end of the joint. Install the joint seal material by compressing the material and pushing it down into the joint opening until it has recessed approximately 1/4 inch (6 mm) below the deck surface. Do not push the joint seal material into the joint at an angle that will stretch the seal material.
7. Once installation of the joint seal material has begun, do not stop the process until it has been completed.
8. Immediately and thoroughly clean off excess epoxy from the surface of the joint material. Do not use solvents to clean the top surface of the joint seal material

G. Opening to Traffic

Do not permit traffic to drive over sealed joints until the epoxy or elastomeric concrete has hardened enough to resist displacement of the seal due to deck movement or other causes. Allow the elastomeric concrete to cool and solidify for at least one hour before opening to traffic. Allow the epoxy concrete to cure for at least two hours before opening to traffic.

449.3.06 Quality Acceptance

A. Acceptance

Provide evidence from the manufacture that the joint system has been used successfully in installations with similar environmental and project conditions. Failure to perform adequately in actual use shall be cause for rejection.

B. Correction of Defects

At the Contractor's expense, repair, or remove and replace, joint seals that are complete and have leaks, have adhesive or cohesive failure, or that are damaged during construction or by traffic before final acceptance.

449.3.07 Contractor Warranty and Maintenance

To comply with Subsection 106.05, "Materials Certification," provide certification from the manufacturer that shows that the bridge deck joint sealing system materials conform to the requirements stated in Subsection 449.2. Transfer to the Department the manufacturer's standard five-year performance warranty on each installation. A warranty claim may be filed for cohesive or adhesive failure of the materials supplied or material failure due to weathering.

449.4 Measurement

When listed as a pay item in the Proposal, bridge deck joint seal will be measured and paid for at the Contract price linear foot (meter) complete in-place joint at the location specified on the Plans. Payment is full compensation for the removal of any old sealant, cleaning the joint, and furnishing and installing the new seal and header if required and all incidentals.

No separate measurement and payment will be made unless a pay item for the work is included in the Proposal. If no pay item is included in the Proposal, the cost of the joint seal shall be included in the overall bid price submitted.

No separate measurement or payment will be made for any saw-cutting required to install the joint.

449.4.01 Limits

General Provisions 101 through 150.

449.5 Payment

When shown in the schedule of Items in the Proposal, the following items will be paid for separately:

Item No. 449	Performed Elastomeric Neoprene Profile Joint Seal with Epoxy Concrete Headers Bridge No._____Bent No._____	Per linear foot (meter)
Item No. 449	Performed Elastomeric Neoprene Profile Joint Seal with Elastomeric Concrete Headers Bridge No._____Bent No._____	Per linear foot (meter)
Item No. 449	Low-Density, Closed Cell, Cross-linked, Ethylene Vinyl Acetate, Polyethylene Copolymer, Nitrogen-Blown Seal with Epoxy Concrete Headers Bridge No._____Bent No._____	Per linear foot (meter)
Item No. 449	Low-Density, Closed Cell, Cross-linked, Ethylene Vinyl Acetate, Polyethylene Copolymer, Nitrogen-Blown Seal with Elastomeric Concrete Headers Bridge No._____Bent No._____	Per linear foot (meter)
Item No. 449	Low-Density, Closed Cell, Cross-linked, Ethylene Vinyl Acetate, Polyethylene Copolymer, Nitrogen-Blown Seal Bridge No._____Bent No._____	Per linear foot (meter)
Item No. 449	Elastomeric Profile Bridge Joint Seals, Bridge No._____Bent No._____	Per linear foot (meter)

449.5.01 Adjustments

General Provisions 101 through 150.

Section 450—Pressure Grouting Portland Cement Concrete Pavement

450.1 General Description

This work includes pumping a slurry type grout mixture through holes drilled in the pavement into voids underneath the slabs to stabilize and underseal Portland cement concrete pavement.

Use a grout mixture that can form a hard and durable mass to fill voids under the pavement. Regrout unstable slabs after initial undersealing and stabilizing as directed by the Engineer.

450.1.01 Definitions

Initial set: 200 psi (1380 kPa) with a 0.25 in² (161 mm²) probe according to AASHTO T 197 (Proctor Needle Test).

450.1.02 Related References

A. Standard Specifications

Section 452—Full Depth Slab Replacement

Section 609—Removal of Portland Cement Concrete Roadway Slabs

Section 801—Fine Aggregate

Section 830—Portland Cement

Section 831—Admixtures

Section 880—Water

Section 882—Lime

Section 883—Mineral Filler

Section 884—Chlorides

B. Referenced Documents

GDT 84

AASHTO T 197 (Proctor Needle Test)

450.1.03 Submittals

General Provisions 101 through 150.

450.2 Materials

A. Fine Aggregate

Ensure that fine aggregate meets the requirements of Subsection 801.2.02, except mortar-making properties are not required.

B. Grout Mixtures

The Bid Item designates the required undersealing grout mixture types. The mixture contains the proportions listed in the Table of Grout Mixtures below.

Use enough mixing water with the dry ingredients to produce a grout consistency that makes the efflux time from the flow cone at least 14 seconds and no more than 20 seconds. Use GDT 84 to determine the grout consistency.

Add cement, cement and limestone dust, cement and fly ash, or cement and fine aggregate in the proper proportions to a mixed batch to produce the required consistency.

Table of Grout Mixtures					
Mix Proportions, Percent by Weight of Dry Materials					
Grout Types Dry materials	1	2	3	4	5
Cement (min.)	25	25	25	25	25
Limestone dust	—	25	75	50	—
Fly ash	25	—	—	25	75
Fine aggregate	50	50	—	—	—

Ensure that materials meet the requirements of these Specifications:

Material	Section
Portland Cement Types I or III	Section 830
Mineral Filler (Limestone Dust)	Section 883
Calcium Chloride, Type I	Section 884**
Fly Ash, Type F	Section 831
Water	Section 880
Fine Aggregate Size No. 20	Subsection 801.2.02
Agricultural Lime	Subsection 882.2.02*
*Agricultural lime used for undersealing shall have at least 95% passing the No. 30 (600 µm) sieve and 30% passing the No. 200 (75 µm) sieve.	
**The Laboratory may approve other commercially available accelerators that may be substituted for calcium chloride.	

450.2.01 Delivery, Storage, and Handling

General Provisions 101 through 150.

450.3 Construction Requirements

450.3.01 Personnel

Provide personnel to control the lifting on every slab that is undersealed.

Furnish a truck driver and sufficient workers to assist operating static load measuring gauges on the slab stabilization testing equipment.

450.3.02 Equipment

A. Batching Equipment

The batching equipment includes weight hoppers and scales for each dry material or calibrated volumetric batch hoppers.

Calibrate volumetric batch hoppers in increments equivalent to one 94 lb (42.6 kg) bag of cement. Use aggregate scales accurate to ± 1 percent and cement scales accurate to plus or minus 0.5 percent.

Equip conveyor belts with windproof covers if the belts convey the dry materials into the mixer.

B. Mixing Equipment

For mix types one through four, use a watertight, batch-type mixer or high-speed colloidal mixer capable of blending the materials into a homogenous mixture. Use a high-speed colloidal mixer for mix type five.

C. Grout Pumping Equipment

Use grout pumping equipment with a positive displacement plunger or piston-type pump or a screw-type worm pump.

1. Ensure that the discharge line is equipped with the following:
   - Pressure gauge at the pump capable of measuring from 0 to 200 psi (0 to 1380 kPa)
   - Positive cut-off valve at the nozzle end
   - Bypass return line for recirculating the grout back into a holding tank or mixer
2. Equip the end of the discharge line with a nozzle or device that remains secure in the drilled holes and is free of leaks.
3. Furnish a blow pipe with enough air pressure to dislodge loose debris.
4. Provide an auger of the proper size and length to open clogged holes.

D. Drilling Equipment

Provide the following drilling equipment:

- Air compressors—Provide air compressors with enough capacity to operate pneumatic hammers or drills.
- Pneumatic or hydraulic drills—Provide pneumatic or hydraulic drills equipped with bits that will cut 1.5 in (38 mm) or other approved diameter holes through the concrete pavement.

Operate the equipment so as to prevent damage to the pavement being drilled. Do not create excessive down pressure to force the bit through the concrete rapidly. The Engineer must approve the drilling procedure.

E. Slab Stabilization Testing Equipment

Furnish a two axle truck with dual rear wheels. Load the rear axle to 18 kips (8000 kg) evenly distributed between the two sides.

F. Slab Lift Measuring Equipment

Ensure that equipment used to measure the slab lift can simultaneously detect movement of the two outside slab corners adjacent to a joint and the adjoining shoulder. Ensure that the equipment can make these measurements to 0.001 in (0.025 mm).

450.3.03 Preparation

General Provisions 101 through 150.

450.3.04 Fabrication

General Provisions 101 through 150.

450.3.05 Construction

A. Observing Weather Limitations

Begin pressure grouting operations when the air temperature in the shade and away from artificial heat is at least 35 ºF (2 ºC) and rising. Stop pressure grouting if the temperature is 40 ºF (4 ºC)and falling or when the subgrade contains an abnormal amount of moisture.

B. Testing

Slab testing is performed to detect all slabs having a deflection greater than 0.030 in (0.76 mm).

Perform testing between 3:00 AM and 9:00 AM, unless otherwise directed by the Engineer. In hot weather, test between 3:00 AM and 7:00 AM if directed by the Engineer. Stop testing if slabs are beginning to "lock-up."

1. Preliminary Testing by the Department

   Preliminary testing is not required on slabs that require grouting but have been previously tested and marked by the Department.

2. Preliminary Testing by the Contractor

   If the Department has not performed preliminary testing, use static methods to test each transverse joint and crack on the Project or within designated Project areas.

   Do not test, however, transverse cracks in slabs that are to be replaced entirely. Test the joints and cracks as follows:

   a. Furnish four gauges on two gauge mounts (two gauges per mount) that can detect slab movement under the load to the nearest 0.001 in (0.025 mm).
   b. Maintain the gauges and mounts in operating order. Furnish the loaded truck, truck operator, and personnel to place and assist in operating the gauges.
   c. Position one set of gauges with one gauge referenced to the corner of each slab on both sides of the joint near the pavement edge. Zero in the gauges with no load on the slab on either side of the joint.
   d. Move the test truck into position and stop it with the center of the test axle about 1 ft (300 mm) behind the joint and the outside test wheel approximately 1 ft (300 mm) from the pavement edge.
   e. Read the back gauge and move the test truck across the joint to about 1 ft (300 mm) forward of the joint. Read the forward gauge.
   f. Repeat this operation for each joint to be tested. The Inspector will read and record the gauges.
   g. When required, perform additional tests on slabs that move more than 0.030 in (0.76 mm) or as shown on the Plans. Perform additional tests as follows:
      1) Drill one hole in the corner of the slab where the movement was measured.
      2) Drill the holes the same diameter as the undersealing holes and place the holes 18 in (450 mm) from the transverse and shoulder joint.
      3) Fill the test holes with water and observe.
      4) If the Engineer believes the pavement system readily drains the water poured into the test hole, pressure grout the slab. Based on the results of testing, deflection measurements, and water drainage observations, the Engineer will determine which slabs require undersealing.
   h. After the designated slabs have been pressure grouted according to these Specifications, retest them according to Subsection 450.3.05.B.2, "Testing."
   i. Regrout and retest slabs that deflect more than 0.030 in (0.76 mm) or deflect the amount shown on the Plans, as directed.

Slabs will be accepted that continue to show movement greater than specified after two properly performed groutings.

C. Drilling Holes

The Plans show the location of holes to be drilled in each type of slab for undersealing. However, whenever possible, use the holes from previous undersealing work by redrilling.

To begin drilling:

1. Use the hole pattern and pumping sequence shown on the Plans with modifications to use as many holes from previous undersealing work as possible.

   The Engineer may alter the hole pattern. Only the actual number of holes drilled will be considered for payment for the initial undersealing.
2. Drill the holes 1.5 in (38 mm) diameter or another size if approved by the Engineer. Ensure that the holes provide positive seal for the pumping nozzle.
3. For the first undersealing, drill the holes to approximately 8 in (200 mm) deep beneath the bottom of the concrete unless the Engineer approves an alternate depth.

   The Engineer shall designate the number, depth, and location of holes for undersealing attempts after the initial attempt.
4. Be careful during operations to not break or crack the slabs.
5. Repair slabs that have cracks that extend through the drill hole at the Contractor's expense. Make repairs according to Section 609 and Section 452.

D. Cleaning Holes

After drilling the holes, and immediately before pumping the underseal grout, insert a pipe with enough air pressure in each hole to remove debris and to provide a passage for the grout, if necessary.

E. Pumping Underseal Grout

Properly position the lift measuring device before pumping grout under a slab.

Fill the voids under a slab as follows:

1. Pump grout in holes designated by the Engineer.
2. Have the Engineer determine the time of day to perform pressure grouting. The Engineer may require pressure grouting during late night and early morning hours if the slabs cannot be stabilized with daytime grouting.
3. During pumping, watch the lift measuring device to prevent excessive pumping pressures, rapid lifting of slabs, or substantial rising of the adjacent shoulders.
4. Stop pumping in the hole when the cavities or voids are filled within the range of the hole being grouted. Grout flowing out of an adjacent hole or joint or the edge of the slab is sufficient evidence that the voids and cavities are filled and pumping should cease. Additional evidence is that the slab rises rapidly or the adjacent shoulder begins to rise.
   a. Lift the slab slightly to move grout into the existing cavities and voids.
   b. Do not lift more than 0.050 in (1.3 mm) for a slab measured at the outside joint corner unless approved by the Engineer.

   NOTE: Do not crack the slabs by differential lifting.
5. Secure the discharge hose nozzle in the hole to provide a seal that will maintain the grout pressure underneath the slab.

   Ensure that the nozzle end does not extend below the bottom of the concrete.
6. Continue pumping in a hole until a clear flow of grout comes out other holes, joints, or cracks, or until the slab begins to lift excessively.

7. Repeat this procedure in other holes until the voids are filled. Do not plug the holes during grouting operations.
8. When edge drains are near the shoulder or pavement interface, take precautions to minimize the amount of grout that flows into the edge drain system.

   Use the following procedure or an alternate approved by the Engineer to monitor grout flow into the edge drain system:

   a. Drill one or more "observation holes" in the asphaltic concrete shoulder as close as possible to the shoulder or pavement interface.
   b. Time the grouting operation to prevent and stop excess grouting in a hole to ensure that grout does not flow into the edge drain system.
   c. When grouting operations are complete, fill the "observation holes" with asphaltic concrete.
9. Prevent slabs from cracking during the undersealing operation. Remove and replace slabs cracked during this operation at the Contractor's expense according to Section 609 and Section 452.

F. Cleaning Up

Before permitting traffic on the section, remove grout deposits on the pavement or shoulders and clean the surface. Remove debris, bags, spillage, etc., from the Right-of-Way each day.

G. Permanently Sealing Holes

Remove the grout from the holes and fill the holes with a stiff sand-cement mixture or an approved quick setting patching material.

Repair filled holes that ravel out or become damaged. Also, repair unsatisfactorily filled holes from previous undersealing work at the Contractor's expense, as directed by the Engineer.

H. Testing for Slab Stability

After pumping the grout under the designated slab and permitting traffic over the slabs for at least 12 hours, test the slabs for stability.

Conduct these tests by static loading as in Subsection 450.3.05.B.2.h and Subsection 450.3.05.B.2.i. Based on the test results and criteria on the Plans, the slabs will be accepted or designated for further undersealing as directed by the Engineer.

I. Opening to Traffic

Do not permit traffic on the grouted slabs until the grout has taken an initial set (normally 4 to 6 hours).

Schedule the operations so that the grout has initially set and the work area is cleared before traffic is allowed on the grouted slabs.

450.3.06 Quality Acceptance

General Provisions 101 through 150.

450.3.07 Contractor Warranty and Maintenance

General Provisions 101 through 150.

450.4 Measurement

Portland cement incorporated into the pressure grout slurry is measured by the 94 lb (42.6 kg) bag.

A. Holes

On an initial undersealing attempt, holes drilled through the existing concrete slabs at the locations and to the depths shown on the Plans or directed by the Engineer are measured per each.

If holes drilled for the first stabilizing attempt are used for the second stabilizing attempt, holes are not paid for again by the Department. If new holes are drilled they are measured per each.

B. Preliminary Testing

Preliminary testing described in Subsection 450.3.05.B.2.h and Subsection 450.3.05.B.2.i. is measured by the linear mile (linear kilometer), horizontal measure for each lane of each roadway tested, when required. Bridges are not included in the measurement.

C. Stability Testing

Stability testing in Subsection 450.3.05.H is measured by the joint.

450.4.01 Limits

General Provisions 101 through 150.

450.5 Payment

A. Holes

Holes will be paid for at the Contract Unit Price per each. Payment is full compensation for drilling and sealing the hole.

If holes drilled for the first stabilizing attempt are used for the second stabilizing attempt, the Department does not pay for the holes again.

B. Portland Cement Pressure Grout Slurry

Portland cement pressure grout slurry will be paid for at the Contract Unit Price bid per 94 lb (42.6 kg) bag of cement or fraction thereof. Payment is full compensation for furnishing materials to be incorporated into the grout slurry, hauling, mixing, pumping, and cleaning to stabilize the slabs.

C. Preliminary Testing

Preliminary testing when shown on the Plans and in the Proposal as a payment Item will be paid for at the Contract Price bid per linear mile (kilometer), horizontal measure. Bridges will be excluded from the linear mile (kilometer) measurement.

D. Stability Testing

Static testing of slabs performed according to Subsection 450.3.05.B.2.h and Subsection 450.3.05.B.2.i. will be paid for each time the joint is tested. Payment is full compensation for furnishing the load test truck, driver, and personnel necessary to assist in the testing.

E. Pumping Under Seal Grout

No separate payment will be made for this work. Include the cost in the bid submitted for Portland cement pressure grout slurry. The precautions used will require prior approval of the Engineer.

Payment will be made under:

Item No. 450	Holes	Per each
Item No. 450	Portland cement pressure grout slurry (grout type___, ___, or___)	Per bag 94 lb (42.6 kg)
Item No. 450	Preliminary testing	Per linear mile (kilometer)
Item No. 450	Stability testing	Per joint

450.5.01 Adjustments

General Provisions 101 through 150.

Section 451—Patching Portland Cement Concrete Pavement (Spall Repair)

451.1 General Description

This work includes partial depth patching of spalls and potholes in Portland cement concrete pavement by removing the broken, damaged, or disintegrated concrete pavement. This work also includes removing asphaltic concrete patches from spalled or damaged areas of the pavement surfaces and patching them with approved patching materials according to this Specification and the existing pavement cross-sections.

451.1.01 Definitions

General Provisions 101 through 150.

451.1.02 Related References

A. Standard Specifications

Section 504—Twenty-Four Hour Accelerated Strength Concrete

Section 800—Coarse Aggregate

Section 801—Fine Aggregate

Section 833—Joint Fillers and Sealers

Section 886—Epoxy Resin Adhesives

Section 934—Rapid Setting Patching Materials for Portland Cement Concrete

B. Referenced Documents

QPL 27

451.1.03 Submittals

General Provisions 101 through 150.

451.2 Materials

Ensure that the materials used to repair and patch Portland cement concrete pavement conform to the rapid setting patching material requirements.

The laboratory may waive the setting time requirements of approved materials if the minimum compressive strength development is unaffected.

451.2.01 Delivery, Storage, and Handling

General Provisions 101 through 150.

451.3 Construction Requirements

451.3.01 Personnel

General Provisions 101 through 150.

451.3.02 Equipment

To clean the repair areas, use air compressors equipped with traps that can remove surplus water and oil in the compressed air. Ensure that the compressor can deliver compressed air at a continuous pressure of at least 90 psi (620 kPa).

The Engineer will check the compressed air daily for contamination. Do not use contaminated air.

451.3.03 Preparation

A. Removing and Preparing the Repair Area

Prepare to perform partial patching of spalled joints and potholes as follows:

1. Partial Depth Patching of Spalled Joints
   a. "Sound" each transverse joint and longitudinal joint with a visual defect to determine the limits of the damaged or defective areas. Strike the pavement surface along the sides of each joint with a hammer, chain drag, or similar tool to detect unsound concrete that sounds flat or hollow.
   b. Mark the limits of the defective areas on the pavement by making a rectangle 2 in (50 mm) beyond the outer limits of the unsound concrete area as a guide for sawing.
   c. Mark spalled areas less than 2 ft (600 mm) from each other along a joint as one spall area. If separated by 2 ft (600 mm) or more, mark as separate spall areas.

      Do not repair defective (spalled) joint areas less than 6 in (150 mm) long and 1.5 in (40 mm) wide under this Specification. Thoroughly clean and seal them with silicone sealant as part of the joint sealing operation specified in Section 461.
   d. Saw the rectangular marked areas with near vertical faces at least 2 in (50 mm) but not more than 3 in (75 mm) deep.
   e. Remove unsound material within the sawed area with a maximum 30 lb (135 N) chipping hammer.
   f. Do not damage or fracture the sound concrete substrate to be left on the bottom of the spall area. Do not use sharp pointed bits.
   g. If the unsound material is more than 4 in (100 mm) deep, the Engineer may direct a 6 ft (1.8 m) slab replacement be placed, which is classified and paid for under Section 609 and Section 452.
   h. Before placing the patching material, saw the face of the existing transverse or longitudinal joints bordering the repair areas. Saw at least 5 in (125 mm) deep and 0.25 in (6 mm) wide with the full depth of the saw cut extending at least 1 in (25 mm) beyond the limits of the repair areas in each direction.
   i. Immediately before placing the patching material, thoroughly clean the surfaces within the repair areas by sandblasting and air blasting to remove oil, dust, dirt, traces of asphaltic concrete, slurry from saw operation, and other contaminants.
   j. Place a 0.25 in (6 mm) wide piece of closed cell polyethylene foam shaped to fit the saw cut in the joints bordering the repair areas.

      If "back-to-back" repairs are made at a joint, support the 0.25 in (6 mm) closed-cell polyethylene foam during the placing operation to maintain a true, straight joint line.

      Have the Engineer approve the method used. The polyethylene foam must be supported in a straight line when the patching material is placed so a straight joint line will be formed.

      Maintain a straight line or the Engineer may require the repairs be repeated at no additional cost to the Department.
2. Partial Depth Patching of Pavement Potholes

   The Engineer will determine which pavement potholes will be repaired.

   Use the procedures given for repairing spalled joints to repair potholes within the pavement surface. The requirement of using the 0.25 in (6 mm) closed-cell polyethylene foam does not apply.

451.3.04 Fabrication

General Provisions 101 through 150.

451.3.05 Construction

A. Concrete Patching

Patch concrete one lane at a time, safely and rapidly to minimize inconvenience to the traveling public.

1. Accomplish the work with other operations in progress within an area if possible.
2. Complete the work before the grinding operation begins, if grinding is specified.
3. Remove and replace completed concrete patches that contain cracks, shrinkage, compression failures, or are damaged by construction or traffic before Final Acceptance at no additional cost to the Department.

B. Placing Patching Material

Use Repair Method 1 unless the State Materials Research Engineer gives written approval to use Repair Method 2. Use Repair Method 1 when the average daily temperature is 50 ºF (10 ºC) or above. Use of Repair Method 2, if approved, is limited to the manufacturer's written recommendations.

For the following repair methods, begin the placement when the surface within the repair area is dry and thoroughly free of contaminants.

Ensure that the finished surface including joints meets a surface tolerance of 1/8 in (3 mm) per 10 ft (3 m).

Use approved measures as necessary to keep pavement surfaces adjacent to this operation free of excess grout and other materials. Unless otherwise specified, complete the patching operations and open the lanes to traffic before sunset each day.

1. Repair Method 1: Twenty-four Hour Accelerated Strength Concrete

   Use this method as follows:

   a. Completely coat the concrete surface areas within the repair area with a film of Type II epoxy approximately 10 to 20 mils (0.25 to 0.50 mm) thick.
   b. Mix the concrete on site in a portable mixer. Obtain approval for the mix design and mixing method from the laboratory. The material must meet a slump range of 1.0 in. (25mm) to 3.0 in. (75mm).
   c. Deposit the concrete in the repair area while the epoxy is still tacky. Vibrate it to form a dense, homogeneous mass of concrete that completely fills the patch area.
   d. Screed the concrete to the proper grade and do not disturb it until the water sheen disappears from the surface.
   e. Cover the concrete with wet burlap or membrane curing compound. Allow the curing to continue for at least three hours. The Engineer may require longer curing to ensure sufficient concrete strength development before opening to traffic.
2. Repair Method 2: Rapid Setting Patching Material for Portland Cement Concrete Pavement (Type I, II, IV, and V)
   a. In addition to the requirements outlined in Subsection 451.3.03.A, "Removing and Preparing the Repair Area," prepare the surfaces in the repair areas according to the manufacturer's written recommendations.
   b. Perform the patching material handling, mixing, placing, consolidating, screeding, and curing according to the manufacturer's written instructions as approved by the laboratory.
   c. Continue curing for at least one hour and until opening the section to traffic.

C. Special Requirements

The following special requirements apply to this work:

1. If repairing adjacent to an unstable shoulder, place a form the full depth of the repair area to maintain a true, straight shoulder joint and to prevent the patching material from intruding onto the shoulder area.
2. After curing the patching material, remove the form and repair the shoulder at no cost to the Department.

3. During sandblasting, protect traffic in the adjacent lanes.
4. After the sandblasting operations:
   a. Thoroughly clean the area to be repaired with compressed air.
   b. Remove sand from the sandblasting operation from the roadway and shoulders.
5. Do not "over-cut" the pavement beyond marked areas whenever possible.
6. Remove saw slurry and other contaminates from the over-cutting.
7. Repair the over-cuts by filling full-depth with an approved low-viscosity epoxy compound using a Type II epoxy adhesive specified in Section 886. Make these repairs as soon as possible, but not after the joint is resealed.
8. Re-establish original transverse and longitudinal joints by sawing and sealing the joints with silicone that meets the requirements of Subsection 833.2.06, the Plan details, and Section 461.

   Re-establish the joints within 60 days after placing the patch. Ensure that re-established joints are at least 3/8 in (10 mm) wide.

451.3.06 Quality Acceptance

General Provisions 101 through 150.

451.3.07 Contractor Warranty and Maintenance

General Provisions 101 through 150.

451.4 Measurement

The area measured for payment is the number of square yards (meters) of patching complete in place and accepted.

451.4.01 Limits

General Provisions 101 through 150.

451.5 Payment

The area measured as specified above will be paid for at the Contract Unit Price per square yard (meter). Payment is full compensation for equipment, tools, labor, incidentals to complete the work, including but not limited to:

- Removing existing asphaltic concrete patching material or the spalled, broken, or damaged Portland cement concrete
- Cleaning the open area by sandblasting
- Furnishing, placing, finishing, and curing the patching material
- Sawing and sealing new transverse and longitudinal joints

Payment will be made under:

Item No. 451	Patching Portland cement concrete pavement	Per square yard (meter)

451.5.01 Adjustments

General Provisions 101 through 150.

Section 452—Full Depth Slab Replacement

452.1 General Description

This work includes replacing Portland cement concrete pavement slabs, full or partial length. Remove the slabs according to the Plans or as directed by the Engineer. See Section 609.

452.1.01 Definitions

General Provisions 101 through 150.

452.1.02 Related References

A. Standard Specifications

Section 431—Grind Concrete Pavement

Section 461—Sealing Roadway and Bridge Joints and Cracks

Section 504—Twenty-Four Hour Accelerated Strength Concrete

Section 609—Removal of Portland Cement Concrete Roadway Slabs

Section 833—Joint Fillers and Sealers

Section 853—Reinforcement and Tensioning Steel

Section 886—Epoxy Resin Adhesives

B. Referenced Documents

GDT 72

452.1.03 Submittals

Obtain approval of the mix design from the Office of Materials before using the mix.

452.2 Materials

Ensure that materials used in full depth slab replacement conform to the following Specifications:

Material	Section
Twenty-Four Hour Accelerated Strength Concrete	Section 504
Dowel Bars and Bar Coatings	Subsection 853.2.08
Epoxy	Section 886
Silicone Sealant	Subsection 833.2.06

452.2.01 Delivery, Storage, and Handling

General Provisions 101 through 150.

452.3 Construction Requirements

452.3.01 Personnel

Furnish traffic control while the Department conducts slab movement testing described in Subsection 452.3.06.B. “Quality of Work” at no additional cost to the Department.

452.3.02 Equipment

Use sufficient equipment to perform work such as drilling dowel holes, setting dowels, spreading, striking off, consolidating, screeding concrete, and sawing and sealing joints. Obtain the Engineer’s approval of the equipment before starting the work.

Place the dowels at the locations specified on the Plans by using pneumatic or hydraulic drills and bits that will drill a 1-3/8 in (35 mm) diameter hole in the existing concrete faces.

452.3.03 Preparation

A. Clean the Exposed Faces

Before placing the concrete, thoroughly clean the vertical exposed faces of the existing slabs to remove contaminates.

1. Use wire brushing or other methods approved by the Engineer.
2. Remove existing silicone or other joint sealant from the exposed concrete faces.

B. Preparing Base

Remove debris and standing water from the base. Thoroughly compact loose base material by hand tamping before placing concrete.

452.3.04 Fabrication

General Provisions 101 through 150.

452.3.05 Construction

A. Installing the Dowels

Complete these steps to install the dowels:

1. Use a pneumatic or hydraulic drill to drill a 1-3/8 in (35 mm) diameter hole in the existing concrete faces. Place the dowels at locations specified on the Plans.
2. If the Engineer allows, drill a hole no greater than 1.5 in (38 mm) diameter to insert the dowel bars. Follow these guidelines:
   a. Operate the equipment so as to prevent damage to the pavement being drilled.
   b. Obtain the Engineer's approval for the drilling procedure.
   c. Thoroughly clean the drilled holes of contaminants.
3. Set the type and size of dowels specified in the Plans into the hardened concrete face of the existing pavement with Type VIII epoxy bonding compound that meets the requirements in Section 886.
   a. Place the dowels at locations noted on the Plans with one-half of the dowel protruding out of the pavement.
   b. Place the dowels at the correct horizontal and vertical alignment. Do not misalign them more than 3/8 in (10 mm) within the vertical or oblique plane.
   c. Place enough epoxy in the back of the hole to completely fill the entire cavity around the dowel upon insertion of the dowel bar. Remove excess epoxy.
   d. Use epoxy adhesive packaged in a cartridge with a mixing nozzle that thoroughly mixes the two components as they are dispensed. Use a mixing nozzle at least 8 in (200 mm) long.

      Or, use a machine that mixes the two components thoroughly to the proper ratio as the material is being placed.
   e. Allow the epoxy to harden before placing the concrete to prevent the dowels from moving during the concrete placement.
4. At the free joints shown on the Plans, use epoxy-coated, plain, round, steel dowel bars that meet the requirements of Subsection 853.2.08.

   Coat the protruding portion of the epoxy coated dowels with a thin film of grease or other approved material to ensure proper bond-breaking characteristics.
5. Cleanly saw the edges of the epoxy-coated smooth dowels bars. Do not shear them.

NOTE 1: Never drive dowels into a dowel hole with a sledge hammer or other device.

NOTE 2: Coated dowels will be rejected if they cannot be freely inserted into a dowel hole.

B. Setting Forms

Forms are not required for this work. The vertical faces of the existing pavement and shoulder bordering the replaced slab or joint area serve as the forms.

However, if the shoulder is irregular or unstable:

1. Place a form the full depth of the replaced slab or joint area to maintain a true, straight shoulder joint and to prevent the concrete from intruding into the shoulder area.
2. Compact the foundation under the form true to grade so that the form, when set, will firmly contact the base at the correct grade.
3. Clean and oil the forms before placing the concrete.
4. Wait four hours to remove the forms from the freshly placed concrete, unless otherwise specified. Carefully remove the forms to avoid damaging the pavement.
5. Repair the shoulder to the Engineer's satisfaction at no additional cost to the Department.

C. Placing and Finishing Concrete

The required concrete for the work will be 24-hour accelerated strength concrete that meets the requirements of Section 504. Obtain mix design approval from the Laboratory before use.

Place the concrete only when the ambient temperature is 40 °F (4 °C) and rising. Do not place concrete when the underlying base material is muddy or frozen.

1. Deposit the concrete within the slab replacement area in a way that requires as little rehandling as possible and prevents mix segregation.
2. Minimize hand spreading as much as possible. But where necessary, use shovels not rakes.

NOTE: Do not allow workmen to walk in fresh concrete with shoes coated with earth or other foreign substances.

3. Fill the replaced slab area with concrete and thoroughly consolidate by rodding, spading, and using sufficient vibration to form a dense homogeneous mass throughout the area.
4. Ensure the final surface area has a uniform appearance and is free of irregularities and porous areas.

   The finished surface, including joints, shall meet a surface tolerance of 1/8 in. in 10 ft (3 mm in 3 m) in any direction.

   For slab replacements done in preparation for resurfacing of the pavement, the finished surface, including joints, shall meet a surface tolerance of 3/16 in. in 10 ft (5 mm in 3 m) in any direction.

Perform necessary corrections by grinding according to Section 431. The Engineer may order replacement if any replaced slab is low in relation to adjacent slabs. The Engineer will require replacement if it is determined that excessive pavement grinding is necessary to match the profile of the full depth slab replacement or if grinding the adjacent pavement would create a drainage problem.

Do the following at no additional cost to the Department:

- Perform all necessary corrections
- Furnish all necessary traffic control personnel, materials, and equipment to detect deviations.
- Grind or replace slabs to correct surface tolerance deviations

If the Project involves resurfacing or grinding the pavement surface, a flat finish will be satisfactory. Otherwise, a broom or hand-tine finish will be required that will produce a surface texture depth of 0.20 in. (5mm) or greater as measured by GDT 72. The Engineer shall approve the finishing method and any deficient areas corrected to his or her satisfaction and performed at your expense.

D. Curing Concrete

Use the applicable portions of Section 504 regarding concrete mix and curing in this work.

E. Sawing and Sealing Joints

Establish transverse and longitudinal joints within the slab replacement area by doing the following:

1. Saw and seal the joints with silicone sealant that meets the requirements of Subsection 833.2.06. Seal according to Plan details and Section 461.
2. Ensure that the width of the sawed joints is 3/8 in (10 mm) , unless otherwise directed.
3. Saw and seal the joints as soon as possible, but not more than 60 days after placing the slab, unless the Plans specify otherwise.

   Sawing and sealing of the reestablished joints is included in the bid cost for slab replacement.

F. Protecting from Rain

Properly protect the concrete from rain before the concrete hardens by following these guidelines:

1. Keep the materials to protect the concrete surface available at all times.

   Protective materials include burlap or cotton mats, curing paper, or plastic sheeting material.
2. When rain is imminent, stop the paving operations and begin covering the surface of the unhardened concrete with the protective covering.

G. Working at Night

If night work is authorized on the Project, provide lighting for work performed at night for safety, traffic control, and work control and completion.

Correct unsatisfactory work to the Engineer’s satisfaction at no additional cost to the Department.

H. Opening to Traffic

Schedule slab replacements so that the concrete will have a curing time of at least four hours. Complete the work and open the lanes to traffic before sunset the day it is placed, unless authorized otherwise.

The Engineer may require a longer curing period, mix design adjustments, or other corrective action to ensure sufficient concrete strength development before opening to traffic.

452.3.06 Quality Acceptance

A. Surface Tolerance

Ensure that the finished surface tolerance, including joints, is 1/8 in per 10 ft (3 mm in 3 m) in any direction. Make corrections by grinding according to applicable items in Section 431.

B. Quality of Work

Complete work that meets the requirements in the Specifications and Plans.

Until Final Acceptance of this work, replace damaged or broken slabs due to the following:

- Improper or unsatisfactory methods, equipment, or materials
- Construction or public traffic

Replace the slabs at no additional cost to the Department. The Department may also require removal and replacement of repaired slabs with a differential movement at the transverse joints greater than 0.01 in (0.25 mm) at no cost to the Department. The Department will measure the movement using an 18,000 lb (8165 kg) , single-axle load with dual tires and with the axial load centered 1 ft (300 mm) from the edge of the shoulders as close to the transverse joints as possible.

Testing will be done between 3:00 AM and 9:00 AM when slab movement is the greatest. The movement will be measured using dial gauges that can detect movement to the nearest 0.001in (0.025 mm). .

The Engineer will determine whether the slab movement test is required.

452.3.07 Contractor Warranty and Maintenance

General Provisions 101 through 150.

452.4 Measurement

Full depth replacement slabs are measured for payment by the cubic yard (meter) using the average squared dimensions times the average depth.

Dowels and dowel placement are not measured for separate payment but are included in the Unit Price bid for full depth slab replacement.

452.4.01 Limits

General Provisions 101 through 150.

452.5 Payment

Full depth replacement slabs will be paid for at the Contract Unit Price per cubic yard (meter). Payment is full compensation for:

- Furnishing materials including dowels, epoxy, and 24-hour accelerated strength concrete
- Performing work such as repairing shoulders if required, removing unsatisfactory material, sawing and sealing new joints, and performing other work specified in this Specification

Payment will be made under:

Item No. 452	Full depth slab replacement	Per cubic yard (meter)

452.5.01 Adjustments

General Provisions 101 through 150.

Section 453—Portland Cement Concrete Whitetopping

453.1 General Description

Specifications for this work will be included elsewhere in the Contract.

Section 455—Filter Fabric for Embankment Stabilization

455.1 General Description

This work consists of placing filter fabric for embankment stabilization as shown in the Plans or as directed by the Engineer.

455.1.01 Definitions

General Provisions 101 through 150.

455.1.02 Related References

A. Standard Specifications

Section 881—Fabrics

B. Referenced Documents

General Provisions 101 through 150.

455.1.03 Submittals

General Provisions 101 through 150.

455.2 Materials

Use filter fabric that meets the requirements of Subsection 881.2.08, “Filter Fabric for Embankment Stabilization”.

455.2.01 Delivery, Storage, and Handling

General Provisions 101 through 150.

455.3 Construction Requirements

455.3.01 Personnel

General Provisions 101 through 150.

455.3.02 Equipment

General Provisions 101 through 150.

455.3.03 Preparation

Prior to placing filter fabric, remove logs, stumps, and any other objects from the ground surface that would tend to puncture the fabric. Leave grasses that have formed root mats in place to provide support for fabric placement.

455.3.04 Fabrication

General Provisions 101 through 150.

455.3.05 Construction

A. Filter Fabric Placement

Place and protect filter fabric as follows:

1. Place filter fabric according to the locations and details shown on the Plans.
2. Ensure the fabric is placed with the warp direction perpendicular to the roadway direction and sewn as shown on the Plans unless otherwise directed.
3. Spread the filter fabric as uniformly as practical over the contour of the ground to avoid looseness.
4. Ensure field sewn seams are made with a lock stitch and comply with the requirements for factory seams as given in the material specifications.
5. Protect the filter fabric from chemicals and prolonged sunlight.
6. Replace any filter fabric damaged by neglect at no additional cost to the Department.

B. Fill Placement Over Fabric

Place fill over the filter fabric according to the Plans and applicable portions of Section 208. Maintain at least 8 in (200 mm) of soil between the fabric and any construction equipment.

455.3.06 Quality Acceptance

General Provisions 101 through 150.

455.3.07 Contractor Warranty and Maintenance

General Provisions 101 through 150.

455.4 Measurement

This work is measured in square yards (meters) of accepted materials in place.

455.4.01 Limits

General Provisions 101 through 150.

455.5 Payment

Filter fabric for embankment stabilization is paid for at the Contract Price per square yard (meter), complete and in place. Payment is full compensation for furnishing materials, placing materials, sewing of fabric as required, and for all labor, equipment, tools and incidentals necessary to perform the work.

Payment will be made under:

Item No. 455	Filter fabric for embankment stabilization	Per square yard (meter)

455.5.01 Adjustments

General Provisions 101 through 150.

Section 456—Indentation Rumble Strips

456.1 General Description

This work includes constructing rumble strips on paved shoulders or centerlines by milling or grinding 1/2 in (13 mm) deep depressions into the finished surface as shown in the Plans.

456.1.01 Definitions

Skip ground in place rumble strips—Rumble strips placed with 28 ft (8.5 m) of strips and 12 ft (3.7 m) of clear space between.

Continuous ground in place rumble strips—Rumble strips placed continuously.

Edge line rumble strips – Rumble strips placed continuously on the edge line traffic stripe.

Centerline rumble stripes – Rumble strips placed continuously on the centerline traffic striping.

456.1.02 Related References

A. Standard Specifications

General Provisions 101 through 150.

B. Referenced Documents

General Provisions 101 through 150.

456.1.03 Submittals

General Provisions 101 through 150.

456.2 Materials

General Provisions 101 through 150.

456.2.01 Delivery, Storage, and Handling

General Provisions 101 through 150.

456.3 Construction Requirements

456.3.01 Personnel

General Provisions 101 through 150.

456.3.02 Equipment

A. Cutting Tool

Use a cutting tool that meets these requirements:

- Has independent suspension from the power unit to allow the tool to self-align with the slope of the shoulder
- Is equipped with guides to provide consistent alignment of each line of indentations in relation to the roadway
- Houses a single rotary-type milling/grinding head in line in the direction of travel
- The cutting tips on the milling/grinding head are arranged to provide a smooth cut with no more than 0.05 in (1 mm) between the peaks and valleys

456.3.03 Preparation

General Provisions 101 through 150.

456.3.04 Fabrication

General Provisions 101 through 150.

456.3.05 Construction

A. Indentations

Form the rumble strip indentations as follows:

1. For traveled ways opened to traffic, install the indentations within ten calendar days.
2. Ensure the finished indentations conform to the following:
   a. Indentations have a concave circular shape and are spaced 12 in (300 mm) center to center.
   b. Skip, continuous, and centerline rumble strips indentation dimensions:
      - 7 in (175 mm) wide with a 5 in (125 mm) gap in the direction of travel
      - 16 in (400 mm) long when measured perpendicular to the direction of travel.
      - Minimum 1/2 in (13 mm) maximum 5/8 in (16 mm) deep at center.
   c. Edge line rumble strip indentation dimension:
      - 7 in (175 mm) wide with a 5 in (125 mm) gap in the direction of travel
      - 6 in (150 mm) long when measured perpendicular to the direction of travel.
      - Minimum 1/2 in (13 mm) maximum 5/8 in (16 mm) deep at center.

Excess waste material resulting from the operation may be swept to the grassed shoulder and spread where applicable. If an adjacent grassed shoulder is not available, or if directed by the Engineer, remove and dispose of the waste material in a manner approved by the Engineer.

456.3.06 Quality Acceptance

General Provisions 101 through 150.

456.3.07 Contractor Warranty and Maintenance

General Provisions 101 through 150.

456.4 Measurement

Indentation rumble strips are measured by the gross linear mile (kilometer). The Plan quantity is the pay quantity unless the Engineer makes authorized changes. No deductions will be made for intersections, ramps, bridges, or skips.

456.4.01 Limits

General Provisions 101 through 150.

456.5 Payment

Payment will be made at the Contract Unit Price bid per gross linear mile (kilometer). Payment is full compensation for furnishing equipment and labor and for satisfactorily performing the work.

Payment will be made under:

Item No. 456	Indentation rumble strips—ground in place (continuous)	Per gross linear mile (kilometer)
Item No. 456	Indentation rumble strips—ground in place (skip)	Per gross linear mile (kilometer)
Item No. 456	Indentation edge linerumble strips—ground in place (continuous)	Per gross linear mile (kilometer)
Item No. 456	Indentation centerline rumble strips—ground in place (continuous)	Per gross linear mile (kilometer)

456.5.01 Adjustments

General Provisions 101 through 150

Section 457—Geogrid Reinforcement

457.1 General Description

Specifications for this work will be included elsewhere in the Contract.

Section 461—Sealing Roadway and Bridge Joints and Cracks

461.1 General Description

This work includes removing the existing sealant material (if applicable), cleaning the joint, and installing silicone sealant in the roadway and bridge joints specified on the Plans. The Plans will designate the:

- Type of joint (transverse or longitudinal)
- Location of joint (mainline, shoulder, ramps, acceleration/deceleration lanes)
- Type of joint (roadway, bridge) to be resealed
- Which type silicone to use (Type A, B, C, or D)

The Engineer will determine the roadway and bridge cracks to be resealed. Unless otherwise specified on the Plans, use Type A silicone for roadway joints and use Type D silicone for bridge joints.

461.1.01 Definitions

General Provisions 101 through 150.

461.1.02 Related References

A. Standard Specifications

Section 430—Portland Cement Concrete

Section 500—Concrete Structures

Section 833—Joint Fillers and Sealers

Section 886—Epoxy Resin Adhesives

B. Referenced Documents

QPL 66

461.1.03 Submittals

General Provisions 101 through 150.

461.2 Materials

Ensure that materials meet the requirements of the following Specifications:

Material	Section
Silicone Sealant and Bond Breakers	833.2.06
Epoxy Resin Adhesives	886

For a list of silicone joint sealant sources, please see QPL 66.

Select and use bond breakers [backer rod (if required) or tape] according to Subsection 833.2.06.A.2, “Bond Breakers”

461.2.01 Delivery, Storage, and Handling

General Provisions 101 through 150.

461.3 Construction Requirements

461.3.01 Personnel

General Provisions 101 through 150.

461.3.02 Equipment

A. Air Compressors

Use air compressors equipped with traps to remove surplus water and oil in the compressed air. Do not use contaminated air. Ensure that the compressor can deliver compressed air at a continuous pressure of at least 90 psi (600 kPa).

The Engineer may check the compressed air for contamination.

B. Silicone Sealant Pump

Apply silicone sealant by pumping only. Use a caulking gun with a cartridge for touch-up work or small applications only.

Use a pump with sufficient capacity to deliver the necessary volume of silicone to completely fill the joint in a single pass.

Ensure that the nozzle’s size and shape closely fits into the joint to fill the joint with sealant with enough force to prevent voids in the sealant and to force the sealant to contact the joint faces.

C. Caulking Gun

Use a caulking gun with cartridge for the following situations:

- Touch up work.
- Placing vertical runs of Type A silicone in a bridge deck joint when Type B, C, or D silicone is used in the horizontal runs.
- Sealing voids and cracks with Type A silicone where Type B, C, or D silicone (which will be applied on top of the Type A silicone) might leak through.
- Sealing small cracks in the concrete.

461.3.03 Preparation

Before installing a bond breaker or sealant, ensure that the joint is clean and dry. Complete all cleaning, air blasting, or air drying.

461.3.04 Fabrication

General Provisions 101 through 150.

461.3.05 Construction

A. Resealing Existing Joints

1. Remove Existing Sealant

   Completely remove the existing sealant in the joints. Take care during removal and cleaning to prevent damaging or enlarging the existing width of the joint. Repair any damaged areas at no cost to the Department.

2. Depth of Existing Joint

   Determine if the joint depth will accommodate the required sealant thickness and bond breaker and provide the required recess below the riding surface.

   Consider that the backer rod is thicker after it is squeezed into the joint.

   If necessary, saw the existing joint deeper and wider to provide the joint depth and width specified on the Plans.

3. Clean the Joint

   Thoroughly clean the joint of all foreign material including oil, asphalt, curing compound, sealant adhesive, paint, rust, and existing sealant, if still present. Demonstrate to the Engineer that the proposed method of cleaning old sealant or foreign material from joints will not widen the joints by more than 0.040 in (1 mm). The method shall not alter the joint profile (including rounding of the top corner) or alter the texture of the concrete riding surface. Do not use chemical agents to clean the joint. Ensure that the cleaning process produces a new, clean concrete face on the vertical faces of the joint.

B. Sealing New Joints

1. Sawing

   Saw the transverse and longitudinal joints according to the Specifications and Plan details.

   a. Make the initial cut and wait for the concrete to harden enough to prevent spalling or raveling:
   b. Make the second cut to the width and depth shown on the Plans.

NOTE: Do not use a gang saw to make a completed cut in a single operation.

   c. If spalling of the sawed edge harms the joint seal, patch the spall with an approved epoxy patching compound and allow it to fully cure before installing the joint sealant.
   d. Make each patch to the intended neat lines of the finished cut joint.

2. Cleaning Freshly Cut Sawed Joints

   Immediately after sawing the joint do the following:

   a. Completely remove the resulting slurry from the joint and clean the immediate area by flushing it with a jet of water under pressure. Use other tools as necessary.
   b. When the surfaces are thoroughly clean and dry and immediately before placing the joint sealer, use compressed air with a pressure of at least 90 psi (620 kPa) to blow out the joint and remove dust traces.
   c. If freshly cut sawed joints are contaminated before they are sealed, clean them according to Section 461.
   d. Ensure that cleaning methods do not alter the joint profile, the rounding of the top corners, or the concrete riding surface texture. Do not clean the joint with chemical agents.

C. Sealing Joints

1. Install Bond Breakers

   Select and use bond breakers [backer rod (if required) or tape] according to Section 833.2.06.A.2.

   a. Before installing a bond breaker, clean and dry the joint or crack. Before placing the bond breaker and sealant, complete the cleaning, air blasting, or air drying.
   b. Ensure that the backer rod diameter is at least 25 percent larger than the joint width.
   c. Install the backer rod in the joint at the depth specified on the joint detail in the Plans, as directed by the Engineer, and according to Subsection 461.3.05.B.

NOTE: The width of some bridge joints may require back-up material other than the typically shaped round backer rod.

   d. Use material available in square or rectangular shapes, or cut the strips from sheet stock to fit properly into the joint. Use approved bond breaking tapes in place of backer rod in some applications. See Plan details for various joint types.

2. Install Silicone Sealant

   Install the silicone sealant immediately after cleaning the joint or crack and installing the bond breaker. Keep the joint or crack clean and dry.

   If the joint or crack becomes contaminated, damp, or wet, remove the bond breaker if it has been installed. Clean and dry the joint or crack and install a new bond breaker before placing the sealant.

   Follow these guidelines when placing the sealant:

   a. Ensure that the air temperature during placement is at least 40 ºF (4 ºC).
   b. Use a pump to apply the silicone sealant. The pump must be able to completely fill the joint to the specified width and height of sealant in one pass.

      Use a nozzle with the proper size and shape to closely fit inside the joint. The sealant must be introduced inside the joint with enough pressure to prevent voids in the sealant and to force the sealant into contact with the joint faces.
   c. Use a caulking gun with cartridge for touch-up work, small applications (such as vertical runs with Type A silicone in a bridge deck joint when Type B, C, or D silicone is used), and to seal voids and cracks with Type A silicone where Type B, C, or D silicone might leak through. You may also use a caulking gun to seal small cracks in the concrete.
   d. After placing Type A silicone sealant, tool it to provide the specified recess, thickness, and shape as shown on the Plans. Apply sufficient force to the sealant in this tooling operation to force the sealant against the joint faces and to ensure proper wetting and bonding of the sealant to the joint faces.

      Type B, C, and D silicones are self-leveling and do not normally require tooling.
   e. Because of the consistency of Type B, C, and D silicones, ensure that the bond breaker completely closes off gaps and voids where the silicone might leak through.

To ensure that the gaps are closed use any of the following methods:

- Stuff small pieces of backer-rod into the gaps and voids
- Place a piece of bond breaking tape over the void
- Use Type A silicone to seal the void.

If using Type B, C, or D silicone and a backer-rod, ensure the backer rod is Type M. Do not use Type L backer-rod with Type B, C, and D silicone.

f. Place the sealant to conform to the specified recess and thickness shown in the Plans.

3. Clean Pavement

After sealing a joint or crack, immediately remove the surplus sealant or other residue on the pavement or structure surfaces.

4. Open to Traffic

Do not permit traffic on the sealed joints or cracks until:

- The sealant is tack free.
- The sealant has cured enough to resist displacement from slab movement or other causes.
- Debris from traffic does not imbed into the sealant.

5. Special Requirements

The following requirements apply to this work:

a. Seal the joints and cracks for any one day's work on resealing projects within 30 calendar days after surface grinding for that day is completed, unless otherwise specified on the Plans. Seal joints on new pavement after the curing period.

When the Plans call for resealing before specified grinding, increase the recess depth and joint depth by 1/4 to 3/8 in (6 to 10 mm) to compensate for the depth of the pavement removed during the grinding operation.

b. The Engineer will determine all cracks to be resealed.

c. Route cracks to the depth specified on the Plans by wet or dry sawing with diamond or abrasive blades. Remove sawing residue or other contaminants.

d. If the manufacturer recommends a primer, use it according to the recommendations. When required, install primer before the backup material.

e. Seal the bridge joints, including the approach slab, specified on the Plans.

Only reseal non-armored joints (one-sealant receptacle and concrete surfaces on joint faces), unless otherwise indicated on the Plans.

461.3.06 Quality Acceptance

If a sealed joint fails due to any of the following reasons, it will be rejected.

- Adhesion or cohesion failure of joint material
- Unsatisfactory or improper quality of work
- Damage by operations or public traffic
- Damage to the sealant from displacing because of slab movements or insufficient curing before opening to traffic

Repair the joint to the Engineer's satisfaction at no additional cost to the Department.

461.3.07 Contractor Warranty and Maintenance

General Provisions 101 through 150.

461.4 Measurement

When listed as a pay item in the Proposal, joints and cracks sealed and resealed will be measured in linear feet (meters).

No separate measurement and payment will be made unless a pay item for the work is included in the Proposal. If no pay item is included in the Proposal, include the cost of the joint sealing and resealing in the overall bid price submitted.

No separate measurement or payment will be made for any sawcutting required to seal or reseal the joint.

461.4.01 Limits

General Provisions 101 through 150.

461.5 Payment

When listed as a pay item in the Proposal, joints and cracks sealed or resealed will be paid for at the Contract Unit Price bid per linear foot (meter). Payment is full compensation for furnishing materials, equipment, tools, labor, and incidentals to complete the work.

Payment will be made under:

Item No. 461	Resealing roadway joints and cracks, type___	Per linear foot (meter)
Item No. 461	Resealing bridge joints, type___	Per linear foot (meter)
Item No. 461	Sealing roadway joints and cracks, type___	Per linear foot (meter)
Item No. 461	Sealing bridge joints, type___	Per linear foot (meter)

461.5.01 Adjustments

General Provisions 101 through 150.

Section 500—Concrete Structures

500.1 General Description

This work consists of manufacturing and using Portland cement concrete to construct structures. See the Contract Plans for the specified color and locations for placing integrally colored concrete.

500.1.01 Definitions

General Provisions 101 through 150.

500.1.02 Related References

A. Standard Specifications

Section 104—Scope of Work

Section 211—Bridge Excavation and Backfill

Section 431—Grind Concrete Pavement

Section 507—Prestressed Concrete Bridge Members

Section 511—Reinforcement Steel

Section 530—Waterproofing Fabrics

Section 531—Dampproofing

Section 621—Concrete Barrier

Section 800—Coarse Aggregate

Section 801—Fine Aggregate

Section 830—Portland Cement

Section 836—Special Surface Coating for Concrete

Section 838—Graffiti-Proof Coating for Concrete

Section 853—Reinforcement and Tensioning Steel

Section 865—Manufacture of Prestressed Concrete Bridge Members

B. Referenced Documents

ASTM A 653/653M

ASTM A 924/924/M

ASTM A 681

ASTM C 685

ASTM C 979

ASTM D 260, Type I or Type II

AASHTO Specifications

AASHTO M 148 or C 309

AASHTO M 171

AASHTO M 194

AASHTO T 22

AASHTO T 126

AWS D 2.0

Laboratory Standard Operating Procedure, Quality Assurance for Ready Mix Concrete Plants in Georgia

Standard Operating Procedure for Ready Mix Concrete

American Iron and Steel Institute Specification for the Design of Cold Formed Steel Structural Members

Federal Specification TT-P-641d, Type II

Georgia Standards 4948 and 9031-L

QPL 10

QPL 17

QPL 23

GDT 134

DOT 525

500.1.03 Submittals

A. Concrete Mix Designs

The Contractor is responsible for all concrete mix designs. Ensure that concrete mixes contain enough cement to produce workability within the water-ratio specified in Table 1—Concrete Mix Table , below.

Design concrete mixes that meet the requirements of the Table 1—Concrete Mix Table , below. The Office of Materials will determine the concrete properties using the applicable method in Section 500 of the Sampling, Testing, and Inspection Manual.

Table 1—Concrete Mix Table

English								
Class of Concrete	**(2) Coarse Aggregate Size No.**	**(1 & 6) Minimum Cement Factor lbs/yd^3**	**Max Water/ Cement ratio lbs/lb**	**(5) Slump acceptance Limits (in) Lower-Upper**		**(3 & 7) Entrained Air Acceptance Limits (%) Lower-Upper**		**Minimum Compressive Strength at 28 days (psi)**
"AAA"	67,68	675	.440	2	4	2.5	6.0	5000
"AA1"	67,68	675	.440	2	4	2.5	6.0	4500
"AA"	56,57,67	635	.445	2	4	3.5	7.0	3500
"A"	56,57,67	611	.490	2	4	2.5 (3)	6.0	3000
"B"	56,57,67	470	.660	2	4	0.0	6.0	2200
"CS"	56,57,67 Graded Agg.*	280	1.400	-	3½	3.0	7.0	1000 (4)
metric								
Class of Concrete	**(2) Coarse Aggregate Size No.**	**(1 & 6) Mini mum Cement Factor kg/m^3**	**Max Water/ Cement ratio kg/kg**	**(5) Slump acceptance Limits (mm) Lower - Upper**		**(3 & 7) Entrained Air Acceptance Limits (%) Lower-Upper**		**Minimum Compressive Strength at 28 days (MPa)**
"AAA"	67,68	400	.440	50	100	2.5	6.0	35
"AA1"	67,68	400	.440	50	100	2.5	6.0	30
"AA"	56,57,67	375	.445	50	100	3.5	7.0	25
"A"	56,57,67	360	.490	50	100	2.5 (3)	6.0	20
"B"	56,57,67	280	.660	50	100	0.0	6.0	15
"CS"	56,57,67 Graded Agg.	165	1.400		90	3.0	7.0	7 (4)

NOTES:

1. **Portland cement may be partially replaced with fly ash as provided in Subsection 500.3.04.D.4 or with granulated iron blast furnace slag as provide for in Subsection 500.3.04.D.5.**
2. **Specific size of coarse aggregate may be specified.**
3. **Lower limit is waived when air entrained concrete is not required.**
4. **The mixture will be capable of demonstrating a laboratory compressive strength at 28 days of 1000 psi (7 MPa) + 0.18 R*. Compressive strength will be determined based upon result of six cylinders prepared and tested in accordance with AASHTO T 22 and T 126.**

   *** Where R = Difference between the largest observed value and the smallest observed value for all compressive strength specimens at 28 days for a given combination of materials and mix proportions prepared together.**

5. **Designed slump may be altered by the Office of Materials when Type "F" water reducers are used.**
6. **Minimum cement factor shall be increased by 50 lbs/yd^3 (30 kg/m^3) when size No. 7 coarse aggregate is used.**
7. **When Class A is specified for bridge deck concrete, the entrained air acceptance limits shall be 3.5% to 7.0%.**

Submit all concrete mix designs to the Office of Materials (OM) for review. The Department will approve mixes that contain materials from approved sources and produce concrete that meets these Specifications.

Submit concrete mix design proportions for approval by one of the following methods:

1. Request Approval of Specific Proportions

   When requesting approval of specific concrete mix design proportions for classes of concrete, include the following information:

   - Source of each material
   - Apparent specific gravity of the cement and the fly ash, if used
   - Bulk specific gravity (saturated surface dry) of each aggregate
   - Percent absorption of each aggregate
   - Amount of each material required to produce a cubic yard (meter) of concrete
   - Proportions of admixtures per cubic yard (meter) of concrete and any use limitations
   - Proposed slump and air content of the design
   - Evidence that the proposed mixture complies with Subsection 500.1.03

   Concrete mix designs that do not have a proven performance record and have not been used by the Department must meet minimum laboratory strength requirements.

2. Obtain Ready-Mix Design Proportions for commonly used materials

   Get approved concrete mix designs from authorized ready-mix concrete plants.

   Ready-mix concrete plants approved according to Laboratory Standard Operating Procedure "Quality Assurance for Ready Mix Concrete Plants in Georgia" are authorized to submit concrete mix designs for approval. See QPL 10 for a list of approved plants.

3. Use Laboratory-Designed Proportions for commonly used materials

   Use laboratory-designed concrete mix proportions from either of the following sources:

   a. Laboratory-designed proportions are available for commonly used combinations of materials. Request these mixes in writing from the State Materials Engineer. Request specific classes of concrete and specify the source of ingredients.

   b. Select a combination of materials from approved sources and request that the laboratory determine a mix that meets requirements in the Table 1—Concrete Mix Table above. The laboratory will establish proportions for strength and workability under laboratory conditions.

B. Delivery Tickets

Have the concrete plant transmit delivery tickets (DOT Form 525) with each load of concrete delivered to the work site. Give the Engineer one of these delivery tickets.

Ensure that the following information is on the delivery ticket:

- Project designation
- Date
- Time
- Class and quantity of concrete

- Actual batch proportions
- Free moisture content of aggregates
- Quantity of water withheld
- Concrete mixing revolutions

If available forms do not provide the required information, ask the Engineer to provide one.

C. Formwork Plans

The Engineer may require detailed formwork plans for review. If so prepare the formwork plans and submit them to the Engineer. In no case will the Contractor be relieved of responsibility for the formwork plans.

When constructing permanent steel bridge deck forms, submit bar support details and types to the Department for approval before placing the deck form reinforcement.

D. Falsework Plans

Submit, for review by the Engineer, detailed falsework plans for spans under which traffic flows.

The Engineer may require plans for spans that do not accommodate traffic.

E. Shop and Erection Drawings

Submit fabricators' shop and erection drawings to the Engineer for review and approval. Indicate the following in the drawings:

- Grade of steel
- Physical and section properties for permanent steel bridge deck form sheets
- Locations where the forms are supported by steel beam flanges subject to tensile stresses

F. Hauling Vehicle Information

Before hauling starts on new bridges, submit the following information for each vehicle:

- Weight on each axle, empty
- Weight on each axle, fully loaded
- Center-to-center distances of axles
- Center-to-center distances of wheels measured parallel to each axle

G. Cold Weather Concrete Curing and Protection Plan

Secure the Engineer's approval of a "Cold Weather Concrete Curing and Protection Plan" for bridges and structures. Emphasize protection for the underside of bridge decks when using metal forms and include the protection procedures to be used.

Protection procedures shall keep the concrete above 50 °F (10 °C) for 72 hours after placement and above freezing for 6 days after placement. Choose the protection method from Table 2 based on the expected temperature within 48 hours after concrete placement.

Table 2—Cold Weather Protection

Protection Procedure	Expected Temperatures Within 48 Hours
Heated enclosures	Below 25 °F (-4 °C)
Commercial blankets	Below 25 °F (-4 °C)
Batt insulation	Below 25 °F (-4 °C)
Heavy-duty polyethylene	25 °F (-4°C) or above

H. Color Additives

Submit to the Engineer the following:

1. Product Data: Manufacturer's specifications and instructions for color additives.
2. Samples for Concrete Color Selection: Submit sample chip of specified color indicating color additive number and required dosage rate. Submittals are for general verification of color.

500.2 Materials

Ensure that materials meet the Specification requirements of Table 3:

Table 3—Materials Specifications

Material	Section
Coarse Aggregate (1)	800.2.01
Fine Aggregate Size No. 10	801.2.02
Dampproofing or Waterproofing Material (Bituminous)	826.2.01
Portland Cement (2)	830.2.01
Portland-Pozzolan Cement (2)	830.2.03
Admixtures:	
Air-Entraining Admixtures	831.2.01
Retarding Admixtures	831.2.02
Water Reducing Admixtures	831.2.02
Granulated Iron Blast-Furnace Slag	831.2.03.A.3
Fly Ash	831.2.03.A
Curing Agents	832
Joint Fillers and Sealers	833
Special Surface Coating	836
Linseed Oil	870.2.06.A.
Mineral Spirits	870.2.06.A.4
Water	880.2.01
Graded Aggregate (3)	815.2.01
Graffiti Proof Coating	838.2.01

Material	Section
Concrete used in Bridge Construction	500.3.04.F
1. Use either Class A or Class B coarse aggregate of the designated size, except when using limestone or dolomite in bridge structures. When using limestone or dolomite, use Class A coarse aggregate.	
2. Use Type I or Type II Portland cement or Type IP Portland-Pozzolan cement unless otherwise specified. Do not use air-entraining cement.	
3. The gradation requirements of graded aggregate are modified to require 30% to 45% by weight passing the No. 10 (2.00 mm) sieve.	

Construct bridge sections containing duct enclosures for stressing tendons using concrete with a maximum stone size of No. 7.

Use concrete manufactured at plants that qualify as approved sources according to the Standard Operating Procedure for Ready Mix Concrete. See QPL 10 for a list of approved plants.

For a list of approved deck oil protective surface treatment sources, see QPL 23.

Use colored concrete additive made with pure, concentrated mineral pigments especially processed for mixing into concrete and complying with ASTM C 979.

If adding color additives to the mix at the jobsite, furnish color additives in pre-measured Mix-Ready disintegrating bags to minimize jobsite waste.

Do not use accelerator admixtures containing calcium chloride in colored concrete mix.

500.2.01 Delivery, Storage, and Handling

A. Aggregate Stockpile

Stockpile aggregate as follows:

1. Keep stockpile areas firm, reasonably level, well-drained, clean, and free of sod or foreign matter.
2. Stockpile aggregate separately by type and source.
3. Form stockpiles using methods and equipment that do not cause the aggregate to segregate, become contaminated, or degrade. The Engineer may reject improperly formed stockpiles.
4. Stockpile aggregate long enough for the moisture content to stabilize.
5. Do not use aggregates stored in pits or silos that contain water.

B. Aggregate Handling

Operate aggregate handling equipment carefully to minimize segregation, breaks, spills, contamination, and mixing of the sizes and types of aggregates.

C. Cement Storage

Store cement as specified below. Reject all caked, lumpy, or contaminated cement.

1. Bulk Cement

   Use bulk cement unless the Engineer allows bag cement to be used.

   Store bulk cement in bins or silos designed for this purpose. Provide moisture-proof storage containers with a mechanism that allows cement to flow freely from the discharge opening.
2. Different Brands

   Store and use cement of different brands and types, or from different mills separately.

D. Admixture Storage and Handling

Carefully store and dispense admixtures as recommended by the manufacturer to prevent contamination.

E. Concrete Handling and Placing

Handle and place concrete according to the following:

1. Haul Time Limitations

   Ensure that concrete reaches its final position in the forms within one hour after adding the cement to the aggregates.

   If retarders or water reducers are used, the allowable time limit increases to 1-1/2 hours. Test concrete immediately for acceptance tolerances before placing in forms using limits established in Table 1—Concrete Mix Table.

2. Placement Limitations

   After delivering the concrete to the job site or the staging area at the site or after mixing the concrete at the site, transport it carefully to the placement point to prevent excessive slump loss or segregation. Use any of the following equipment:

   - Buckets
   - Buggies
   - Pumps
   - Other approved means

F. Form Storage

Store forms off the ground.

G. Precast Unit Handling

Except as noted below, the applicable portions of Subsections 507.2.01, "Delivery, Storage, and Handling," 507.3.05.A, "Prepare Bearing Areas," 507.3.05.B, "Erecting PSC Bridge Members," and 507.3.05.D, "Concrete Finish," shall govern.

Handle precast, nonprestressed units as follows:

1. Do not lift the units from the casting bed until the concrete reaches a strength of at least 1,500 psi (10 MPa).
2. Do not transport or erect the units until they reach a strength of at least 3,000 psi (20 MPa).
3. Restrict live loads (including erection equipment) on the units until they reach a minimum strength of 4,500 psi (30 MPa).

H. Color Additives

Comply with manufacturer's instructions. Deliver to site or batch plant in original, unopened packaging. Store color additives in dry conditions.

500.3 Construction Requirements

500.3.01 Personnel

A. Supervision, Personnel, and Skilled Workers

Provide enough supervision, personnel, and skilled workers to do the following:

1. Properly produce, place, and finish concrete in each pour unit according to Subsection 500.3.05.P, Table 5—Minimum Placement Rates or as required by the Plans.
2. Check screed clearances and tolerances before beginning deck pours.
3. Place concrete without delays.

B. Plant Operator Certification

Volumetric proportioning requires that the operator be certified by the Office of Materials.

500.3.02 Equipment

A. Equipment Restrictions

Do not use delivery, conveyance, or vibratory units that leak grout, water, oil, or gas.

Provide enough equipment, tools, and materials to properly produce, place, and finish concrete in each pour unit according to the Subsection 500.3.05.P, Table 5—Minimum Placement Rates or as required by the Plans.

The Engineer may prohibit equipment that delays concrete placement.

B. Volumetric Proportioning Equipment

When concrete ingredients are proportioned volumetrically, obtain the Engineer's approval for the equipment and its calibration and operation.

Ensure the following:

- The equipment meets the specifications in ASTM C 685.
- The concrete producer conducts calibration tests at least every 6 months.
- The equipment is calibrated for each new concrete mix before production.

C. Batching Plant Equipment

Ensure that batching plants have the following equipment and that the equipment meets the standards listed.

1. Bins

   Ensure that bins and bin compartments meet the following standards:

   - Adequate capacity for the required concrete production
   - Supported on a rigid framework on a stable foundation capable of holding the bins securely
   - Designed to discharge efficiently and freely into the weigh hopper
   - Positive means of control that slows down and shuts off the material flow when the weigh hopper has the correct quantity.
   - Discharging mechanisms that prevent material leaks when closed
   - Leak-free aggregate storage bins
   - Divided aggregate storage bins for fine aggregate and each size of coarse aggregate
   - Partitioned aggregate storage bin compartment that prevents the materials from mixing
   - Leak-proof, moisture-proof cement bins with a vibrator or other mechanism to discharge cement

2. Weigh Hoppers

   Ensure that weigh hoppers meet the following standards:

   - Have suitable containers freely suspended from scales
   - Have adequate capacity to maintain the Subsection 500.3.05.P, Table 5—Minimum Placement Rates
   - Have a discharge mechanism that prevents material leaks when closed
   - Have vents to permit air to escape
   - Have vibrators or other equipment that ensures complete and efficient discharge of materials
   - Have a dust seal and a port or valve for sampling cement

3. Scales

   Scales used for weighing concrete materials shall have accuracy within plus or minus one percent under operating conditions.

   Ensure the following:

   - When directed by the Engineer, the owner demonstrates the accuracy of the scales.

- Scales are kept clean and in good operating condition.
- The scale operator can clearly see indicating devices.
- The scale operator can easily access controls.

D. Mixers and Agitators

Ensure that mixers and agitators meet the following requirements:

1. General Requirements for Mixers and Agitators

   Provide mixers and agitators that meet these requirements:

   a. Capacity Plates

      Ensure that the mixer or agitator has a legible metal plate or plates attached in an easily visible location. The plates shall indicate the rated capacity in cubic yards (meters) for mixing and agitating.

   c. Concrete Production

      The mixer shall produce concrete that meets the requirements in the Table 1—Concrete Mix Table .

   d. Mixer Performance Test

      The mixer or agitator may be required to pass a mixer performance test. Mixer performance will be evaluated at the discretion of the Engineer.

      Mixer performance tests will include the following by the OMR:

      1) Taking samples of concrete at the one-quarter and three-quarter points of the batch discharge
      2) Measuring the slumps of each concrete sample

         If the two slump values differ by more than 2 in (50 mm), do not use the mixer or agitator until it meets the requirements of the test.

         The Engineer may permit the equipment to be used if the 2 in (50 mm) tolerance can be met by using a longer mixing time or a smaller batch.

2. Mixing Speed

   Follow these guidelines for mixing speed:

   - Do not exceed 150 revolutions at mixing speed.
   - Discharge all concrete from truck mixers before drum or blades reach 300 revolutions, including revolutions at agitating speed.
   - Use the mixing speed defined by the manufacturer for the mixing equipment.
   - If the manufacturer’s definition of mixing speed is not available, use a mixing speed of 6 to 18 revolutions per minute.

3. Mixer and Agitator Maintenance

   Maintain mixers and agitators as follows:

   a. When mixers and agitators are discharged, remove the entire contents before adding materials for the next batch.
   b. Clean mixers and agitators often to prevent concrete and grout accumulation.
   c. Do not discharge cleaning water into any pipe, catch basin, or structure.
   d. If cement or aggregates accumulate in mixers and agitators when cleaning water is discharged, remove them immediately at no expense to the Department.

4. Mixer Types

   Use stationary mixers or truck mixers.

   a. Stationary Mixers

      Ensure that stationary mixers meet the following standards:

      1) Combine the concrete ingredients into a homogeneous, uniform mass within the specified time and when loaded to capacity.

2) Efficiently and uniformly discharge the concrete within the tolerances allowed in Subsection 500.3.02.D.1.c, “Mixer Performance Test.”
3) Permit discharge only after the specified mixing time has elapsed using a locking device.

b. Truck Mixers

Ensure that truck mixers meet the following standards:

- Meets the requirements listed in Subsection 500.3.02.D.4.a, “Stationary Mixers”
- Has an approved revolution counting device in good operating condition
- Does not haul more than the rated capacity in cubic yards (meters) as shown on the attached capacity plates

5. Agitator Types

Use truck agitators or truck mixers operating at agitating speed.

Ensure that agitators meet the following requirements:

a. Keeps the mixed concrete in a homogeneous, uniform mass
b. Efficiently and uniformly discharges the concrete within the tolerances allowed in Subsection 500.3.02.D.1.c, “Mixer Performance Test”

E. Concrete Buckets

Keep concrete buckets clean and in good working condition.

F. Concrete Buggies

Keep concrete buggies clean and in good working condition.

G. Concrete Pumps

Concrete pumping equipment is subject to the Engineer’s approval. Use pumping equipment that has adequate capacity and is suitable for the proposed work.

H. Chutes and Troughs

Do not use chutes longer than 50 ft (15 m) without the Engineer’s permission.

Flush chutes and troughs with water after each run. Do not discharge this water into freshly placed concrete or into conveyance unit.

Promptly remove hardened concrete from chutes and troughs.

Ensure that chutes and troughs meet the following requirements:

1. Metal or metal lined
2. Slope not exceeding one vertical to three horizontal
3. Baffles or a series of short lengths placed to reverse the direction of the concrete flow, when used on steep slopes

I. Pipes or Tubes

Use pipes or tubes to place concrete when the operation requires dropping the concrete more than 5 ft (1.5 m). Thoroughly clean the pipes or tubes after each pour.

Use pipes made of metal or other approved material and long enough to deposit the concrete as close to its final position as possible.

J. Vibrators

Provide enough vibratory units, including at least one additional stand-by unit in good working condition, to compact concrete immediately after it is placed. Have a stand-by unit at the site before each pour is started.

On Projects consisting entirely of small pours (10 yd^3 [8 m^3] or less), the Engineer may waive the stand-by requirement.

Ensure that vibrators meet the following conditions:

- Approved internal rotation-type design
- A power supply that constantly vibrates the concrete at frequencies of not less than 4500 impulses per minute
- A vibration intensity that visibly affects a mass of concrete with a 1 in (25 mm) slump through at least a 18 in (450 mm) radius

K. Screeds

Do not use vibratory screeds (screeds that use a transverse strike-off motion) without the Engineer's approval. Use screeds that are:

- Mechanically operated
- Designed and constructed to screed with the strike-off parallel to the center line
- Readily adjustable
- Capable of maintaining proper adjustment throughout the screeding operation

The two screed types are:

1. Longitudinal Screeds

   Unless otherwise noted on the Plans, use longitudinal screeds only on pour lengths of 70 ft (20 m) or less.

2. Transverse Screeds

   Use transverse screeds on any pour, unless otherwise noted on the Plans. However, transverse screeds are required on pour lengths above 70 ft (20 m).

Support screeds outside the pour area that will receive a surface finish. Do not use intermediate supports or guides.

Adjust screeds to the camber specified on the Plans. Check the camber as often as necessary.

Have the Engineer approve the following for screeds and their supports:

- Weight
- Durability
- Adjustability
- Accuracy
- Mechanical condition
- Operational results

Furnish the equipment necessary to check screed clearances and tolerances before pouring decks.

L. Underwater Placement Equipment

Place concrete under water using the following underwater placement equipment:

1. Tremie

   Use a tremie when depositing concrete in water above 10 ft (3 m) deep. Ensure that tremie is:

   - At least 8 inches in (200 mm) diameter
   - Constructed in sections with watertight couplings

2. Bottom Dump Bucket

   Where the Engineer permits, use a bottom dump bucket in water up to 10 ft (3 m) deep.

   Ensure that the bottom of the bucket opens only when it touches the surface that receives the charge and that the top of the bucket has a lid or cover.

M. Fogging Equipment

To supply additional moisture to the concrete, use fogging equipment with the following characteristics:

- A heavy-duty pump capable of delivering 2 gal (7.6 L) of water per minute to a 0.062 in (1.6 mm) diameter tip at an air pressure of 100 psi (700 kPa).

  An example of a suitable pump is the Alemite Pump 7878-A.
- The ability to consume approximately 22 ft^3/min (0.6 m^3/min) of compressed air
- A 3/8 in (10 mm) inside diameter hose long enough to reach all areas of the deck
- An adjustable spray gun and tip to provide various patterns of atomized spray or fog for changing finishing conditions

  An example of a suitable spray gun is the Gun Jet No. 43 with a 120-2 Multee Jet Nozzle.

If necessary, substitute other equipment that is capable of equal performance.

500.3.03 Preparation

A. Pre-Pour Conference

Before beginning deck placement operations on each Project, and for individual deck pours of an unusual nature, the Engineer will schedule a pre-pour conference with Project supervisory personnel and a representative of the concrete supplier, if applicable.

Conference topics of discussion include the following:

- Reinforcing steel support method
- Final screed setting check
- Anticipated placement rate
- Personnel number
- Equipment type
- Curing methods
- Adverse weather placement procedures
- Emergency procedures
- Other Work-related details

500.3.04 Fabrication

A. Measure Materials

Measure materials as follows:

1. **Cement.** Weigh bulk cement on scales to plus or minus one percent of the designated weight. If the Engineer allows bag cement, proportion the batch to use only whole bags.
2. **Aggregates.** Weigh all aggregates on scales to plus or minus two percent of the designated weight. Apply the proper corrections for aggregate surface moisture.
3. **Water.** Measure water by volume or weight to within plus or minus one percent.
   a. Construct the measuring system to be independent of water pressure fluctuation.
   b. Ensure that measuring systems have outside taps and valves to facilitate plant calibrations.
   c. You may use recycled wash water provided that it meets the requirements of Subsection 880.2.02.
4. **Admixtures.** Measure admixtures by weight or volume within plus or minus three percent of the required amount.

B. Control Concrete Batching

Control batching as follows:

1. Mix batches of concrete according to the proportions of an approved mix design.
2. Ensure that concrete materials are from the designated sources.
3. Correct the batch weights to account for surface moisture in aggregates.
4. Conduct batching control tests according to the procedures in the Sampling, Testing, and Inspection Manual.

C. Prestressed Concrete Deck Panel Requirements

Do not use prestressed concrete deck panels unless approved by the Engineer.

D. Add Admixtures to Concrete

Additives are required when specified herein or as directed by the Engineer.

1. Air-Entraining Admixtures
   a. All bridge structure concrete uses air-entraining additives, except for seal concrete and non-exposed footings.
   b. The Contractor may use air-entraining additives in other concrete to improve workability when job or material conditions dictate.

      When using air-entraining additives as an option to improve workability or when required, do not exceed the upper limit of the entrained air content requirement in the Table 1—Concrete Mix Table .
2. Retarding Admixtures

   Use concrete-retarding additives in bridge concrete when the average temperature is above 65 °F (18 °C) (the average of the expected high and the predicted low).
   a. Normally, concrete-retarding additives are not required for bridge curbs, handrails, crosswalks, or other appurtenances constructed separately from the decks.
   b. The Engineer may waive the use of retarders in substructure concrete when concrete can be placed within one hour after batching.
3. Water-Reducing Admixtures

   The Contractor may use water-reducing admixtures in Class AA concrete for bridge decks when conditions do not require a retarder. The Contractor may use water-reducing admixtures in other concrete when job or material conditions dictate a reduction in water requirements or when minimal set retardation is desired.

   The laboratory may allow Type F water-reducing admixtures when the Contractor requests it. The Contractor may construct bridge sections containing duct enclosures for stressing tendons with concrete using Type F (AASHTO M 194) water reducer as approved by the laboratory.
4. Fly Ash

   The Contractor may use fly ash as an additive in concrete to promote workability and plasticity. The Contractor may use fly ash as a partial replacement for Portland cement in concrete if the following limits are met:
   a. Replace no more than 15 percent of the cement by weight.
   b. Replace cement with fly ash at the rate of 1.0 to 1.5 lbs (1.0 to 1.5 kg) of fly ash to 1.0 lb (1.0 kg) of cement.
   c. Ensure that the fly ash mix meets the requirements of Subsection 500.1.03.A, Subsection 830.2.03, "Portland Pozzolan Cement" and Subsection 831.2.03.A, "Fly Ash".
   d. Calculate water-cement ratio based on the total cementious material in the mix including fly ash.
   e. Do not use Type IP cement in mixes containing fly ash.
5. Granulated Iron Blast-Furnace Slag

   If high-early strengths are unnecessary, the Contractor may use granulated iron blast-furnace slag as a partial replacement for Portland cement in concrete if the following limits are met:
   a. Replace no more than 50 percent of the cement by weight.
   b. Replace the cement with slag at the rate of 1.0 lb (1.0 kg) of slag to 1.0 lb (1.0 kg) of cement.
   c. Ensure that the slag mix meets the requirements of Subsection 500.1.03.A.3, Subsection 830.2.02, "Portland Blast-Furnace Cement" and Subsection 831.2.03.A.3, "Granulated Iron Blast-Furnace Slag"

d. Calculate the water-cement ratio based on the total cementitious material in the mix including granulated iron-blast furnace slag.

e. Do not use Type IP cement or fly ash in slag mixes.

E. Mix Concrete

1. Central-Mixed Concrete

   Mix central-mixed concrete as follows:

   a. Establish the mixing time.

      The Engineer will determine the mixing time for central mixed concrete, but the minimum mixing time will be one minute for stationary mixers of up to 1 yd^3 (1 m^3) capacity. Mixing time may be adjusted in the following situations:

      - The Engineer will increase the minimum time by 15 seconds for each additional cubic yard (meter) or fraction thereof.
      - For mixers with a capacity above 3 yd^3 (2 m^3), the minimum mixing time may be 90 seconds if the resulting mixture is homogeneous and meets the requirements of Subsection 500.3.02.D.1.c, "Mixer Performance Test."
      - The Engineer may waive mixing time requirements for stationary mixers of improved types or new designs that produce homogeneous concrete in less time than that established for a particular capacity by the foregoing. For these types of mixers, the Engineer may establish a minimum mixing time of one minute.

   b. Start the mixing time when all cement and aggregates have been placed in the mixer.

   c. Add some water to the mixer before adding the cement and aggregates, but ensure all water is in the mixer by the end of the first 1/4 of the specified mixing time.

2. Shrink-Mixed Concrete

   Mix shrink-mixed concrete as follows:

   a. Mix the batches as specified in Subsection 500.3.02.D.2."Mixers and Agitators."

   b. Do the initial mixing in a stationary mixer for at least 30 seconds to thoroughly mix the ingredients. Do the final mixing in truck mixers.

   c. Discharge all concrete before the drum or blades exceed 300 revolutions.

   d. Do not allow truck mixing at mixing speed to exceed 100 drum or blade revolutions except as allowed when adding water according to Subsection 500.3.05.M, "Add Water to Concrete."

3. Transit-Mixed Concrete

   Mix transit-mixed concrete as follows:

   a. For concrete mixed completely in a truck mixer, place all concrete ingredients into the mixer at the concrete plant except the quantity of water that may be withheld according to Subsection 500.3.05.M, "Add Water to Concrete."

   b. After loading the truck, begin operating at either agitating or mixing speed; however, start the mixing speed within 30 minutes after loading the truck mixer.

   c. Mix the concrete for 70 to 150 revolutions at mixing speed.

      For revolutions above those specified for mixing speed, use agitating speed.

   d. Discharge all concrete before exceeding 300 drum or blade revolutions.

4. Colored-Mixed Concrete

   a. Proportion, batch and mix color additives in accordance with manufacturer's instructions. Mix until color additives are uniformly dispersed throughout mixture and disintegrating bags, if used, have disintegrated.

   b. If mixed at batch plant, schedule delivery of concrete to provide consistent mix times from batching until discharge.

F. Concrete Used in Construction

1. Requirements

   Use Type I or Type II Portland cement or Type IP Portland-Pozzolan cement for bridge construction, unless otherwise specified.

NOTES:

1. Do not use air-entraining cement.

2. Do not use accelerators (24-hour accelerated strength concrete) that contain chlorides in any bridges where the concrete containing the additive will contact the reinforcing steel.

a. Concrete Types: Use the tabulated results from the Table 1—Concrete Mix Table for the classes and specific requirements for each class of concrete. Use the appropriate class of concrete shown in the Plans or Specifications for each component of a structure, of the type as follows:

- Class AAA–Prestressed concrete
- Class AA1–Precast concrete as called for on the Plans

  If approved by the Engineer, you may use this class as high early-strength concrete and may use Type III cement in concrete used for this purpose.

  The Engineer may also specify the rate of compressive strength development when this concrete is used

NOTE: The Department will not add compensation to the Contractor for Class AA1 concrete when it is used at the request of the Contractor.

b. Class AA–Bridge superstructure concrete or precast concrete as called for on the Plans

c. Class A–General purposes

NOTE: Do not air-entrain Class A concrete deposited in water (seal concrete). Ensure that the concrete has 10 percent additional cement and sufficient water to provide a 6- to 8-in (150- to 200-mm) slump.

d. Class B–Massive sections or lightly reinforced sections or miscellaneous non-structural concrete

e. Class CS–(Portland cement concrete subbase). Use this class as a subbase where required by the Plans. Concrete subbase may be composed of a mixture of Portland cement and graded aggregate or Portland cement, aggregate, and sand.

2. Acceptance of Design

   Determine laboratory acceptance strength by at least 8 compressive test specimens prepared and cured according to AASHTO T 126.

   a. Make the specimens from two or more separate trial batches.

   b. Make an equal number of specimens from each batch.

   c. Calculate the minimum average strength or acceptance strength (X) as follows:

      $X = f'c + 2.0s$

      Where:

      f'c = required minimum compressive strength for each class of concrete from the Table 1—Concrete Mix Table

      s = average standard deviation of all 28-day specimens made in the field representing concrete of a given class from all ready-mix plants

      Use the standard deviations shown in Table 4:

Table 4—Standard Deviations for Calculating Acceptance Strength

Class of Concrete	Standard Deviation (s)	
	Psi	(MPa)
B	370	(2.5)
A	650	(4.5)
AA	620	(4.3)
AA1	540	(3.7)
AAA	500	(3.4)

500.3.05 Construction

A. Meet General Responsibilities

General construction responsibilities include:

1. Batch, mix, deliver, and place concrete according to the Specifications.
2. Have enough production and placement capacity to continuously mix, place, and finish the concrete in each pour unit during daylight hours.

   If necessary, place concrete at night when adequate lighting facilities exist and the Engineer approves of the operations and facilities.
3. If a pour cannot be completed, do the following:
   a. Form an approved construction joint.
   b. Remove the partial pour.
   c. Take other remedial measures directed by the Engineer at no additional expensed to the Department.
4. Schedule placement to minimize exposure of freshly poured concrete to potentially harmful drying elements such as wind and sun before curing materials are applied and protect freshly poured concrete from exposure to excess moisture and freezing for a minimum of 24 hours when such weather conditions exist.

B. Construct Falsework

Accept responsibility for the design, construction, protection, and performance of falsework. Repair or remove and replace (as the Engineer directs) concrete, other material, or portions of the structure that are damaged or destroyed due to falsework failure.

Construct falsework for prestressed post-tensioned concrete structures according to the Contract Special Provisions.

Construct falsework for structures other than post-tensioned box girders as follows:

1. Meet Design Criteria

   Ensure that falsework structural components that have similar functions in an individual permanent span have the same geometric properties and are made of the same materials.

   When designing and centering formwork, treat concrete as a liquid, and use the following weights:

   - 150 lbs/ft³ (23.6 kN/m³) for vertical loading
   - 85 lbs/ft³ (13.4 kN/m³) for horizontal loading
   - 75 lbs/ft² (3.6 kN/m²) live load for deck placement operations

   Use the following falsework design criteria:

   - Design and construct falsework logically so the Bridge Design Office can analyze it using a commonly accepted structural design theory.
   - Avoid exceeding safe working values for material stresses.

- Provide support for the imposed loads, without settling or deforming and a way to compensate for settlement, if it occurs.

2. Support Falsework

   Support falsework using one of these methods:

   - Support on piling driven and removed as directed
   - Found on a footing approved by the Engineer

3. Construct Falsework

   Construct and set falsework to provide the finished structure the specified camber and finished grade.

   Place "telltales" at locations directed by the Engineer to observe how much the falsework settles.

C. Meet Form Design Criteria

Ensure that forms meet the following design criteria:

- Provide wet concrete and other loads and forces of construction support without bulging between the supports or bracing and without deviating from the lines and contours shown on the Plans.
- Meet the design criteria for falsework in Subsection 500.3.05.B.1, "Meet Design Criteria."
- Account for the use of retarded concrete.

Ensure that bracing, ties, and supports are placed accurately.

If the formwork appears to be inadequately supported, tied, or braced (before or during concrete placement), the Engineer may require that the Work stop until the defects are corrected.

D. Use Acceptable Form Materials

Except as noted, fabricate forms from the following materials:

- Lumber
- Plywood
- Metal
- Plastic
- Combinations of these

Use material free of defects that materially affect form strength or materially impair the accuracy or appearance of the concrete surface.

Use the form materials as follows:

1. Lumber Forms

   Construct wood forms as follows:

   a. Size and dress the lumber.
   b. Use lumber at least 1 in (25 mm) thick.
   c. Use lumber for header forms used as screed supports and for curb face forms at least 2 in (50 mm) thick.
   d. Avoid using scrap material or doing patchwork.
   e. Stagger all joints but those between abutting panels.
   f. Line the lumber used to form outside vertical surfaces of exterior beams or girders with an approved form liner.
   g. Use chamfer strips mill-produced from high-quality lumber, free of defects.
   h. Dress and finish chamfer strips on all three sides.
   i. Size chamfer strips to the proper dimensions.

2. Plywood Forms

   Construct plywood forms as follows:

a. If plywood is the type made for general concrete forms and is at least 5/8 in (16 mm) thick, use it in place of 1 in (25 mm) thick lumber to construct forms, if necessary.

b. Ensure that plywood used to form open joints and to line forms is at least 1/4 in (6 mm) thick.

c. When nailing plywood directly to form studs, do not space the studs more than 16 in (400 mm) apart.

d. Use plywood in full sheets wherever practical. Do not do patchwork with small, irregular pieces.

e. Have the Engineer inspect and approve plywood sheet layout.

3. Metal or Plastic Forms

Construct metal or plastic forms as follows:

a. Use metal or plastic to form concrete only if the Engineer approves the forms and if the forms produce satisfactory results.

b. Use metal forms that produce finished concrete equal to or superior to concrete made from comparable wooden forms.

c. Countersink bolts and rivets in the surfaces of metal forms that touch concrete.

d. Grind welds smooth in the surfaces of metal forms to provide a smooth plane surface.

4. Other Material Uses

Use tempered fiberboard for form liners when necessary if it is at least 1/4 in (6 mm) thick. Use tempered fiberboard 1/8 in (3 mm) thick only to form open joints. Support the fiberboard with suitable spacers arranged properly.

Use approved synthetic materials for forming open joints and for other special uses, if necessary.

E. Construct Form Supports

Construct form supports using metal ties, anchors, and hangers as follows:

1. Construct supports that will remain in the finished concrete so they can be removed from the concrete face to a depth of at least 1 in (25 mm) without damaging the concrete.
2. Weld form supports to girder or beam flanges in continuous or cantilever spans only in the flange areas which are in compression.
3. When ordinary wire ties or snap ties are permitted, cut them back at least 3/8 in (10 mm) from the face of the concrete.
4. Design metal tie fittings that minimize the cavities made when they are removed. Fill all cavities after removing metal tie fittings.

F. Construct Temporary Forms

Construct temporary forms as follows:

1. Construct and maintain forms in a mortar-tight condition.
2. Construct forms so that they can be removed easily without damaging the concrete, unless using forms that will remain in place.
3. Build, line, and brace forms so that the formed concrete surface conforms with the dimensions, lines, and grades shown on the Plans.
4. Build headwall forms for skewed pipe parallel to the roadway centerline or at right angles to the radius on curves. Construct headwall forms as follows:

   a. Lay enough pipe to extend through the headwall form.

   b. After the concrete is poured and hardened, carefully cut and dress the protruding pipe ends so no ragged edges remain.

   The Contractor may choose, as an alternate to the above method, to build a circular form that exactly fits the pipe circumference and face of the headwall form.
5. Construct form liner using plywood or other approved form liner as follows:

   a. Use form liner in large sheets. Do not do patchwork.

b. Avoid irregular joint location in form liners.

c. Have the Engineer inspect and approve the proposed liner layout.

6. Bevel forms at beam copings, girders, and other projections to ease removal.
7. Place chamfer strips to chamfer exposed edges of the concrete by the required amount. Use ¾ in (19 mm) chamfers unless otherwise shown on the Plans.
8. Patch with tin or other metal only in those areas of the superstructure lying between and including the inside faces of the exterior beams.
9. When shown on the Plans, splice water stops to form continuous water-tight joints. Hold stops in position while placing concrete.
10. Immediately before erecting forms or just before placing bar reinforcement steel, coat forms with a clear oil or other bond breaker to keep concrete from sticking to the forms.

    a. Do not allow the substance to stain or soften the concrete surface.

    b. Do not apply by reaching or pouring through previously placed reinforcement steel.

11. Wait to place concrete in any form until the Department inspects and approves the form.

    Inspection and approval does not diminish the responsibility to produce concrete surfaces free of warping, bulging, or other defects.

12. When removing forms, remove chamfer strips, blocks, and bracing.
13. Do not leave any part of a wooden form in the concrete.
14. If concrete surfaces do not meet finish specifications, correct the problems with the following steps, as directed by the Engineer:

    - Repair the defects using approved methods.
    - Remove and replace the affected portion of the Work.

G. Reuse Forms

Reuse forms and form material in good condition and satisfactory as determined by the Engineer. Do not use forms or form materials that are warped, cracked, split, bulging, have separated plies, or have unsatisfactory form liner.

Ensure that used forms are mortar tight and produce a finished concrete equivalent to that produced by new forms.

H. Construct Permanent Steel Bridge Deck Forms for Concrete Deck Slabs

Unless otherwise designated on the Plans, construct and use permanent steel bridge deck forms for concrete bridge deck slabs according to these Specifications. Do not use permanent steel bridge deck forms in panels where longitudinal deck construction joints are located between stringers.

Provide a structurally satisfactory slab when using permanent steel bridge deck forms.

1. Fabricate permanent steel bridge deck forms and supports from steel that conforms to ASTM A 653/653M Designation SS, Grade 80/550, Coating Designation G-165/Z-500 and ASTM A 924/924M.
2. Design permanent steel bridge deck forms as follows:

    a. Account for the dead load of the following:

        - Form
        - Reinforcement steel
        - Plastic concrete

    b. Add 50 lbs/ft² (2.4 kN/m²) for construction loads.

    c. Ensure that the unit working stress in the steel sheet does not exceed 0.725 of the specified minimum yield strength for the material furnished. However, do not allow the unit working stress to exceed 36,000 psi (250 MPa).

    d. Account for deflection under the weight of the forms, the plastic concrete, and the reinforcement as follows:

1) If deflection exceeds 1/180 of the design span or 1/2 in (13 mm), whichever is less, use intermediate supports.
2) Do not base deflection on a total load of less than 120 lbs/ft² (5.7 kN/m²).

e. Base the permissible form camber on the actual dead load condition.

f. Do not use camber to compensate for deflection that exceeds the above limits.

g. Compute the form sheets design span using the clear span of the form, plus 2 in (50 mm), measured parallel to the form flutes.

h. Compute physical design properties according to the requirements of the latest published edition of the American Iron and Steel Institute Specification for the Design of Cold Formed Steel Structural Members.

i. Ensure that all bottom reinforcement has a minimum concrete cover of 1 in (25 mm) as shown in Figure 1 (Figure 1 metric).

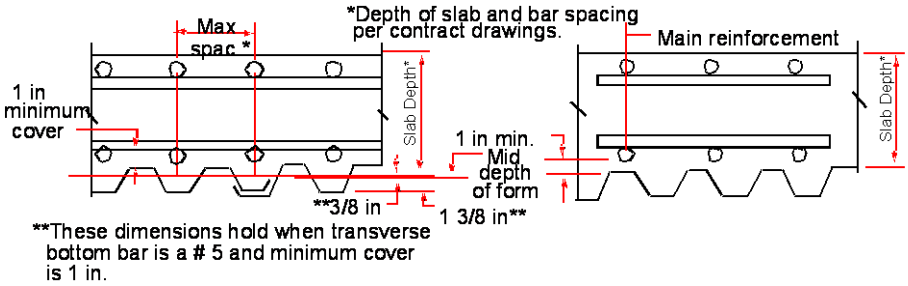

Figure 1

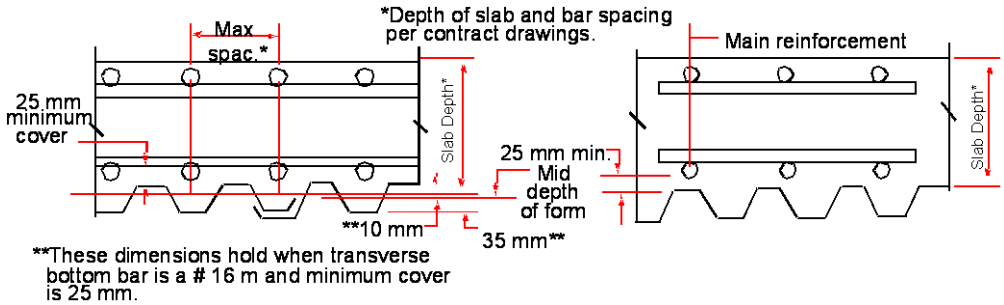

Figure 1 (metric)

j. Maintain the Plan dimensions of both layers of primary deck reinforcement from the top surface of the concrete deck.

k. Do not use precast mortar blocks to support the deck reinforcement.

l. Do not treat permanent steel bridge deck forms as lateral bracing for the compression flanges of supporting structural members.

3. Do not weld to flanges in tension or to structural steel bridge elements fabricated from non-weldable steel grades. Have welders certified by the Department weld metal deck forms or supports for metal deck forms.

I. Install Forms

Install and maintain forms in a mortar-tight condition and according to approved fabrication and erection Plans.

Place transverse construction joints at the bottom of a flute. Field drill 1/4 in (6mm) weep holes no less than 12 in (300 mm) on center along the line of the joint.

1. Highway Bridge Forms

   Install highway bridge forms using either Method 1 or Method 2:

   - **Method 1.** Place forms so the ribs of the forms align with how the bottom transverse reinforcing in the slab is spaced.
   - **Method 2.** Place forms with a 1 in (25 mm) minimum clearance between the top of the form and the bottom of the main deck reinforcement. See Figure 1 (Figure 1 metric).

2. Railroad Bridge Forms

   Install railroad bridge forms as follows:

   a. Place the forms so the tops of the form ribs adjacent to the beam flange are at the bottom of the deck slab specified by the Plans.
   b. Maintain the full slab depth detailed on the Plans.
   c. Do not allow form ribs to project above the Plan bottom of the deck slab.
   d. Do not place form sheets directly on top of the stringer or floor beam flanges.
   e. Securely fasten form sheets to form supports using self-drilling screw fasteners, not by welding. If the Engineer approves, use fastener pins driven into place by a power tool.
   f. Ensure that form sheets have a minimum bearing length of 1 in (25 mm) at each end.
   g. Do not leave loose sheets or accessories on the deck at the end of a day's work.
   h. Place form supports so that they contact the flange of the stringer or floor beam.
   i. Attach form supports using welds, bolts, clips, or other approved means.
   j. Do not weld form supports to the flanges of non-weldable steel or to portions of the flange subject to tensile stresses.
   k. Ensure that welding and welds comply with AWS D 2.0 for fillet welds. However, 1/8 in (3 mm) fillet welds are permitted.

J. Repair Damaged Forms

Repair permanently exposed form metal to the Engineer's satisfaction if the galvanized coating is damaged.

1. Clean the damaged area.
2. Go over the damaged area with a wire brush.
3. Paint the area with two coats of zinc oxide-zinc dust primer that meet Federal Specification TT-P-641d, Type II and has no color added.
4. Do not touch up minor heat discoloration in weld areas.

K. Construct Runways

Provide runways into a deck pour area for moving buggies. If the Engineer approves, use runways to bridge a previous pour that has not reached the minimum strength or age requirements in Subsection 500.3.05.AF.4, "Live Loads—Pouring Equipment."

Construct and support runways to protect the forms and the reinforcement steel position.

L. Construct Work Bridges

Provide a work bridge on deck pours. Support the bridge outside the area of the pour receiving a surface finish. If two or more spans will be poured on the same day, the Engineer may require two work bridges.

Design and construct work bridges to meet the following:

- Do not allow the bridge to sag into the fresh concrete.
- Construct the bridge so that transverse finish and curing material can be applied easily regardless of the screed type.

M. Add Water to Concrete

Add water to the concrete at the concrete plant. Do not add indiscriminate amounts of water at the job site.

If placement conditions require concrete of a more workable consistency, add small amounts of water at the job site if approved by the Engineer.

Add water at the job site as follows:

1. Determine the quantity of water required to provide the necessary consistency.

   The Engineer will not approve additions of water that cause the total amount of water to exceed the maximum water/cement ratio established in the Table 1—Concrete Mix Table .

   The Engineer will reject concrete with water added to it that produces a higher slump than specified in the Table 1—Concrete Mix Table .
2. Do not add water to concrete that has begun to set because of excessive mixing or to concrete that has exceeded mixing or haul time limitations.
3. When adding the water, carefully control the conditions.
4. Position the delivery so the measuring operation is not affected.
5. Measure the water carefully.
6. Inject the water into the mixer forcefully to facilitate uniform mixing.
7. Add water before discharging an appreciable amount of concrete.
8. Do not add more water after concrete discharge begins.
9. After adding the water, mix the concrete an additional 30 revolutions.
10. Finish mixing the concrete before the total revolutions at mixing speed exceed 150.

N. Volumetrically Proportion Concrete

Concrete ingredients may be proportioned volumetrically when non-air entrained concrete is used in miscellaneous concrete, non-exposed footings, or culverts smaller than bridge culvert size.

O. Prepare for Concrete Placement

Prepare for concrete placement as follows:

1. Ensure that an adequate supply of concrete will be furnished and placed to meet the requirements specified in Subsection 500.3.05.P, Table 5—Minimum Placement Rates.
2. To ensure a full bond between prestressed concrete deck panels and the cast-in-place concrete, clean the panel before placing the slab concrete.
3. Immediately before placing cast-in-place slab concrete, saturate the prestressed concrete deck panels with water.
4. Immediately before placing concrete in the forms, the concrete will be measured for acceptance tolerances. Acceptance tolerances for each class of concrete are listed in the Table 1—Concrete Mix Table .

   Conduct the applicable tests according to the procedures in the Sampling, Testing, and Inspection information.

P. Meet the Minimum Placement Rates

If concrete is not produced, placed, and finished according to the minimum placement rates, the Engineer may reject the pour. Concrete pours of a similar nature and size will not be allowed until the problem is corrected and the placement rate met.

The minimum placement rates are listed in Table 5:

Table 5—Minimum Placement Rates for Bridges, Culverts and Retaining Walls

1. Bridge Substructure

Pour Size in Cubic Yards (Meters)	Minimum Placement Rate in Cubic Yards (Meters) per Hour
0-25 (0-19)	10 (8)
26-50 (20-39)	15 (12)
51-75 (40-59)	20 (15)
76-100 (60-75)	25 (20)
101 and over (76 and over)	30 (25)or as designated on the Plans or in the Special Provisions

The minimum placement rate for columns shall be the same as for culvert sidewalls and wingwalls.

2. Bridge Superstructure

Pour Size in Cubic Yards (Meters)	Minimum Placement Rate in Cubic Yards (Meters)per Hour
0–25 (0-19)	15 (12)
26–50 (20–39)	20 (15)
51–75 (40–59)	25 (20)
76 and over (60 and over)	30 (25) or as designated on the Plans or in the Special Provisions

Pour handrail, parapet, curb, and barriers at a rate satisfactory to the Engineer.

3. Culverts

Structure	Minimum Placement Rate in Cubic Yards (Meters)per Hour
Footings and slabs	Same as for bridge substructures
Sidewalls and wingwalls	Use placement rates so that fresh concrete is not placed on concrete that has attained its initial set. Cover all concrete with fresh concrete within 45 minutes.

4. Retaining Walls

Structure	Minimum Placement Rate in Cubic Yards (Meters)per Hour
Footings	Same as for bridge substructures
Walls	Same as for culvert sidewalls and wingwalls

Q. Place Concrete

Place concrete as follows:

1. Do not allow aluminum to touch the concrete while mixing, transporting, handling, or placing it.
2. Transport, handle, and place concrete quickly so that it reaches its final position in the forms within the haul time limitations in Subsection 500.2.01.E.1, “Haul Time Limitations.”
3. Manipulate the delivery or conveyance unit to avoid vibration damaging to partially set concrete.
4. Immediately before placing the concrete, thoroughly clean and wet the forms.
5. Place concrete as close as possible to its final position in the forms.
6. Use chutes, troughs, or tubes to pour the concrete in the forms, without displacing reinforcement steel.
7. Modify or stop using the equipment if chutes, troughs, or tubes cause honeycombed or otherwise inferior concrete.
8. When placing concrete by pumping, operate the pumping equipment so that the concrete is produced in a continuous stream without air pockets.

NOTE: Convey and place concrete by pumping only when specified in the Contract or when authorized by the Engineer.

9. When concrete placement requires dropping the concrete more than 5 ft (1.5 m), use pipes or tubes to place the concrete.

   Do not allow concrete to free-fall more than 5 ft (1.5 m) from the pipe or tube.
10. Place concrete in horizontal layers no more than 18 in (0.5 m) thick.
11. Place and compact succeeding batches in each layer before the preceding batch takes its initial set.
12. Place each succeeding layer before the underlying layer sets.
13. Consolidate the concrete to avoid cold joints between layers.
14. If the forms sag or bulge while concrete is being placed, remove the concrete causing the distortion and the concrete in adjoining areas if the Engineer requires. Removal prevents cold joints and displaced or damaged reinforcement.
15. Work the concrete around reinforcement bars without displacing them.
16. Compact concrete using suitable tools and vibration.
17. Vibrate concrete where it is deposited and vibrate other concrete while it is fresh. Vibrate as follows:
    a. Insert and withdraw vibrators slowly.
    b. Manipulate vibrators to work the concrete around reinforcement and embedded fixtures and into corners of forms.
    c. Vibrate sufficiently to compact the concrete but avoid causing the concrete to segregate.
    d. Stop vibrating before local areas of grout are formed.
    e. Apply vibrators no farther apart than twice the radius through which the vibration is visibly effective.
    f. Do not use vibrators or any other means that could cause segregation to move masses of concrete in the forms.
    g. Do not apply vibrators to sections of concrete that are no longer plastic.
    h. Vibrate concrete-filled steel grid floors by applying the vibrators to the steel.
    i. Vibrate concrete for precast or prestressed units as specified above in steps a through g, unless the Engineer approves alternate methods.
    j. Stop vibration when a mortar line appears on the face of the form and when the coarse aggregate particles are submerged in the concrete mortar.
18. Supplement vibration with spading to ensure smooth surfaces and dense concrete along form faces and in locations difficult to reach with vibrators.
19. After concrete sets initially, do not disturb the forms or the projecting reinforcing bars.

R. Create Construction Joints

Place construction joints according to the Plans or as directed by the Engineer.

If an emergency affects continuous placement, the Engineer will decide if a construction joint is allowed. If allowed, the Engineer will provide instructions about where and how to make the joint.

The Engineer may eliminate certain construction joints if placement, finishing and forming methods can produce satisfactory results.

Create construction joints as follows:

1. Remove mortar splashed on form surfaces and projecting reinforcement steel before concrete reaches its initial set.
   a. Do not puddle dried mortar chips and dust into the plastic concrete.
   b. If excess mortar is not removed from reinforcement steel before the concrete reaches its initial set, delay cleaning until the concrete is thoroughly hardened.
2. If joining fresh concrete and hardened concrete, clean the hardened surface of laitance and incompletely bonded, loose, or foreign material.

Ensure that laitance is completely removed from the following:

- Joints between decks and curbs
- Tops of seal courses
- Construction joints in concrete exposed to sea water

3. Ensure that the surface of the concrete is dry before pouring the concrete against it.
4. Immediately before placing fresh concrete, tighten the forms against the existing concrete.
5. Use tremies or pumps to coat areas where fresh concrete will be poured with mortar or cement grout.
6. Begin placing concrete immediately after placing the mortar or grout.
7. Apply enough vibration to blend the material with the concrete at the construction joint.

S. Protect Fresh Concrete

Do not drive pile, blast, or perform other operations that vibrate the formwork or the concrete noticeably before the concrete reaches a strength of 2,000 psi (15 MPa) and is 3 days old.

Protect fresh concrete from rainfall with waterproof material such as tarpaulins or plastic film. Ensure that the waterproof material is ready before pouring and is sufficient to cover the area of the pour.

T. Place Bridge Deck Concrete

Do not use calcium chloride or any other admixture containing chloride salts in concrete placed on permanent steel bridge deck forms.

Ensure that the tolerances are accurate for bar reinforcement placement in cast-in-place concrete so the top clearance to the bar reinforcement complies with Subsection 511.3.05.G.6, “Bridge Deck Slab Tolerances.”

Place bridge deck concrete according to the Contract Specifications and as follows:

1. Before pouring decks, set substantial bulkheads or headers and shape them to the required deck surface cross section.
2. Ensure that pouring sequences, procedures, and mixes comply with the Plans and Specifications.
3. Pour the deck according to the numbered sequence as follows:
   a. Unless otherwise shown on the Plans, pour each deck in one continuous operation.
   b. When dividing deck pours within any one complete unit (a simple span or a continuous or cantilever unit), pour and finish the concrete in the numbered sequence shown on the Plans, beginning with the lowest number.
   c. Make pours with the same number before pours with higher numbers. Make pours with the same number in any sequence.

      The numbered sequence shown on the Plans also applies to sidewalk pours, but it need not apply to curb, parapet, and handrail pours.
   d. Pour diaphragms between steel or prestressed concrete roadway beams at least 24 hours before pouring the deck slab.
   e. Unless otherwise authorized by the Engineer, pour all diaphragms within a complete unit before pouring decks.
   f. When constructing concrete T-Beams, place girder stems in uniform layers before placing slabs.
   g. If T-Beam spans are supported without intermediate false bents, begin deck placement as soon as the first four stems are placed. After the first four stems, avoid getting more than three stems ahead of the advancing line of the deck pour and lagging by more than the space between stems.
   h. If T-Beam spans are supported by intermediate false bents, place decks and stems the same as for T-Beam spans supported without intermediate false bents. However, ensure that the slab is placed before a cold joint develops between the stem and slab.
4. Do not make the deck pour until any previously poured concrete in the complete unit has set for 24 hours.

   This requirement may be waived under certain conditions if the succeeding pour can be completed (except for final finishing) within four hours of the initial placement of the day. The Engineer must give written approval for this requirement to be waived.

Unless otherwise shown on the Plans, do not place handrail, sidewalks, parapets, and curbs in a complete unit until all the deck slabs in the unit have been poured.

5. Ensure that the pour is the same as the overlap direction (as shown in the shop drawings).
6. Use the following deck pour method:
   a. If there is super-elevation, begin deck pours on either the high or the low side.
   b. Dump each batch against previously placed concrete.
   c. Pour at a rate that ensures fresh concrete along the advancing line of the pour.
   d. Vibrate or tamp concrete dumped on fresh concrete to make the grout flow as follows:
      - Forward with or slightly ahead of the concrete
      - Along the bottoms and sides of the forms
      - Around the reinforcement steel
7. Once the concrete is poured, vibrate it enough to avoid honeycomb and voids, especially at the following locations:
   - Construction joints
   - Expansion joints
   - Valleys and ends of form sheets Screed the concrete as follows:
     a. Use finishing devices operating parallel to the center line. As pouring proceeds, keep the concrete surface screeded to the required grade.
     b. Fill depressions ahead of the screed, and keep a small roll of grout on the leading edge of the screed. Perform further screeding with minimum disturbance to the surface already brought to the grade.
     c. Take care during the placement and screeding to obtain sound concrete at the construction joint located where the slab joins the curb, parapet, or sidewalk.
     d. Do not place excess grout on the leading edge of the screed and do not allow it to remain in this area.
     e. Use either a longitudinal screed or a transverse screed.
   - Longitudinal Screed

     Before doing the final screeding, place enough concrete in front of the screeding position to deflect the dead load.
   - Transverse Screed

     On beam or girder-supported spans with skew angles of 65° or less, place and operate the truss or beam supporting the strike-off parallel to the skew and make the advancing pour line parallel to the skew.

     On beam or girder-supported spans with skew angles between 65° and 90°, position the screed either on the skew or at right angles to the bridge center line.

     On superstructures supported by non-deflecting falsework and on beam- or girder-supported spans with a total dead load deflection no more than 1/2 in (13 mm), position the screed at right angles to the bridge center line and make the advancing line of pour at right angles to the bridge center line.

   f. As the pouring proceeds, keep the concrete surface screeded to the required grade.
   g. Fill depressions ahead of the screed. Keep a small roll of grout on the leading edge of the screed.
   h. Continue to screed without disturbing the surface already brought to the required grade.
   i. Avoid producing unsound concrete where the slab joins the curb, parapet, or sidewalk. Remove excess grout from the leading edge of the screed at these construction joints.
8. Edge joints to be sealed, including dummy joints, as follows:
   a. Edge before the initial set or after the final set.
   b. If edging before the initial set, use edging tools of the proper radius as shown on the Plans.
   c. Carefully remove concrete from pouring operations on adjacent pours to achieve the required rounded edge.
   d. If edging after the final set, allow the joints to harden. After at least 12 hours, grind joints to approximate the plan radius either by hand or by mechanically operated grinding stones.
   e. To achieve full and uniform bearing, finish areas that are recessed for receiving joint members.

9. Finish bridge decks as follows:
   a. As soon as the concrete is hard enough and standing water and moisture sheen disappear, give the concrete a final finish by belting, brooming, or dragging.
      - Belt longitudinally using a wet canvas belt. Limit belting to spans no longer than 40 ft (12 m).
      - Drag transversely or longitudinally with a wet burlap drag.
      - Broom transversely using a stiff-bristled broom.
   b. Finish the following areas carefully:
      - Gutter lines
      - Joints
      - Drains
   c. After belting, dragging, or brooming and when shown on the Plans, groove the bridge deck and approach slabs perpendicular to the center line as follows:
      1) Do not begin grooving until the bridge deck is cured according to Subsection 500.3.05.Z, "Cure Concrete."
      2) If necessary, groove in conjunction with planing required to make the surface corrections specified in Subsection 500.3.06.D, "Bridge Deck Surface Check." Wait until the concrete is hard enough to support the equipment without distorting.
      3) Cut grooves into the hardened concrete using a mechanical saw device capable of producing grooves 0.125 in (3 mm) wide, 0.125 in (3 mm) deep, and 0.50 in (13 mm) apart, center-to-center.
      4) Extend the grooves across the slab to within 1ft (300 mm) of the gutter lines.

U. Place Concrete Parapet on Bridge Decks

Place concrete barrier or parapet~~s~~ on bridge decks. The slip form method with an approved self-propelled extrusion machine as specified in Section 621 is optional.

V. Place Seal Concrete

Deposit concrete in water only when required by the Plans or when considered necessary by the Engineer.

When depositing the seal concrete, follow these guidelines:

- Keep the water as motionless as possible.
- Place the concrete continuously from beginning to end.
- Ensure that the concrete surface remains as horizontal as possible.

Place seal concrete as follows:

1. Place seal concrete carefully in a compacted mass as near to its final position as possible using a tremie, a bottom dump bucket, or other approved means.
   a. Use tremies to place seal concrete as follows:
      1) Support tremies so that the discharge end can move freely over the entire top surface of the work.
      2) Support tremies so that they can lower rapidly to stop or retard the flow of concrete.
      3) At the beginning of the work, close the discharge end to keep water out of the tube.
      4) Keep the tube sealed.
      5) Keep the tremie tube full to the bottom of the hopper.
      6) When dumping a batch into the hopper, induce concrete flow by slightly raising the discharge end and keeping it within the previously deposited concrete. This maintains a seal and forces the concrete to flow into position by hydraulic head.
   b. Use bottom-dump buckets to place seal concrete as follows:
      1) Ensure that the bottom-dump bucket is level full.
      2) Open the bucket only when it rests on the surface that will receive the charge.

3) In lowering and raising the bucket, do not move the water unnecessarily.

c. When approved by the Engineer, place seal concrete by pumping.

2. Wait at least 24 hours after placement to begin dewatering seal concrete, unless the Engineer determines a longer waiting period is necessary.
3. Remove laitance from the seal concrete before placing the footing.
4. Bore seals under spread footings the entire depth of the seal as specified for foundations in Subsection 211.3.05.C, "Boring of Foundations and Seals."
5. If laitance buildup on seals under spread footings exceeds 1/4 in/ft (20 mm/m) of seal depth, the Engineer may decide to core the seal to determine acceptability.
6. When placing concrete exposed to sea water, control the water content to produce concrete of maximum density and create construction joints and prepare their surfaces according to the requirements of Subsection 500.3.05.R, "Create Construction Joints."

W. Pour CS Concrete

Pour CS concrete as follows:

1. Meet CS concrete depth and surface finish requirements.
   - Ensure that the minimum depth is the same as shown on the Plans.
   - Do not vary the depth variation more than 1 in (25 mm).
   - Ensure that the surface finish is generally smooth and uniform.
   - Smooth or fill float marks, voids, and other deformities exceeding 1/2 in (13 mm) before placing approach slabs.
2. To prevent bonding:
   a. Lay clean polyethylene sheeting uniformly over the CS concrete in the approach slab area before placing the slabs.
   b. Use new, unused polyethylene sheeting free of holes, rips, and tears.
   c. Use polyethylene bond-breaking material at least 8 mils (0.2 mm) thick with an overlap of at least 6 in (150 mm).
3. Maintain polyethylene sheeting in good condition throughout the construction process.

   Repair or replace sheeting deemed unsatisfactory as directed by the Engineer.
4. Cure CS concrete with the polyethylene sheeting used for bond breaking.

X. Pour Concrete in Cold Weather

When pouring concrete in cold weather, keep the concrete temperature at the point of delivery at least 50 °F (10 °C). Do not use accelerator-containing chlorides.

Mix and pour concrete in cold weather as follows:

1. Keep concrete materials at the right temperatures.
   - Do not use materials in concrete mix that contain frozen lumps.
   - Do not incorporate water and aggregates into the mix with temperatures more than 150 °F (65 °C).
   - If aggregates or water temperatures are above 100 °F (40 °C), discharge the aggregates and water into the mixer and allow the temperatures to equalize before adding the cement.
   - Heat aggregate with steam, hot water coils, or other methods that do not damage the aggregates. Do not heat aggregates with direct flame.
2. Protect the poured-concrete.
   - Keep concrete above 50 °F (10 °C) for at least 72 hours after placement.
   - Protect concrete from freezing for 6 days after placement.

Y. Pour Concrete in Hot Weather

Reduce hazards and difficulties related to placing and finishing concrete in hot weather before pouring The Engineer may require measures to prevent concrete workability reduction, losses from cement hydration, evaporation, drying, or elevated concrete temperatures.

1. Place Concrete

   Cool forms and reinforcement with water immediately before placing concrete. Meet the minimum placement rates specified in Subsection 500.3.05.P, Table 5—Minimum Placement Rates.

2. Keep Concrete Cool

   Keep concrete cool as follows:

   a. Keep the concrete used for construction at no more than 90 °F (32.2 °C) when measured at the point of discharge from the delivery unit.
   b. If the concrete temperature might exceed 90 °F (32.2 °C) during concrete placement, begin placement when the air temperature cools if the Engineer requires.
   c. Cool the aggregates by fogging or other means that do not affect moisture content.
   d. Use chipped or crushed ice in the mix as a portion of the mixing water on a pound (kilogram) basis. If using ice, ensure that the ice melts before the batch is discharged from the mixing unit.
   e. If necessary, cool water by refrigeration to provide a lower concrete temperature.

3. Finish Concrete

   Do not "splash on" water to aid screeding or finishing operations.

   For bridge decks, fog the surface when required, according to Subsection 500.3.05.Z.3, "Bridge Deck Curing."

   If needed, use wind screens to prevent thermal or shrinkage cracks caused by rapid concrete surface drying.

Z. Cure Concrete

Concrete curing is an integral part of the concrete placement operation. Improperly cured concrete will be considered defective.

If the Engineer determines that curing procedures do not comply with these Specifications, stop placing concrete. Resume concrete placement after taking remedial measures to ensure proper curing.

Begin curing unformed surfaces when the water sheen disappears from the surface or immediately after applying the surface finish. Continue curing for 5 days.

Cure the formed surfaces after removing the forms. Remove them within 5 days after placing concrete. Continue curing until the concrete is 5 days old (from the time it is poured).

Cure concrete surfaces exposed to air using methods that prevent premature drying or moisture loss. Ensure that curing conditions are the same throughout separate curing areas.

Use either or a combination of the two methods specified for curing concrete except bridge decks. Cure bridge decks as described in Subsection 500.3.05.Z.3, "Bridge Deck Curing."

Cure colored concrete in accordance with manufacturer's instructions.

1. General Curing—Supplying Additional Moisture

   Do not use a method that causes the concrete to be alternately wet and dry.

   Cure concrete properly by supplying additional moisture through ponding, sprinkling, or fogging and then retaining the moisture as follows:

   a. Use cotton mats, burlap, sand, hay, or straw coverings.

      Cover with at least 2 in (50 mm) of sand. Cover with at least 3 in (75 mm) of hay or straw.
   b. Do not use sawdust or coverings that cause unsightly discoloration of concrete.
   c. Place coverings after completing the finishing operations when there is no danger of surface damage.

d. Keep coverings moist continuously.

2. General Curing—Preventing Moisture Loss

Keep concrete moist before and during the rubbing from the Type III—Rubbed Finish.

Start curing immediately after the rub using approved waterproof paper, plastic sheets, or membrane-forming curing compounds, except when curing compounds are prohibited.

a. Waterproof Paper or Plastic Sheets

Ensure that the sheets and paper meet the requirements of AASHTO M 171 and use them as follows:

- Use the widest possible widths.
- Lap adjacent sheets at least 6 in (150 mm).
- Seal the laps with tape, mastic, glue, or other approved methods to form a waterproof cover of the entire area.
- Keep the curing material from being displaced by wind.
- Immediately replace or repair sheets or paper that tear, break, or become damaged during the curing period.

b. Membrane-Forming Curing Compounds

Use as the curing agent AASHTO M 148, membrane-forming curing compounds, Type 1-D, Class A or B, or Type 2, Class A or B, white pigmented. Use the curing agent as follows:

- Do not use membrane-forming curing compounds on bridge decks or prestressed concrete bridge members, or in construction joint areas.
- When the water sheen disappears from the concrete surface, apply the curing compound uniformly to unformed areas.
- Apply the compound to formed surfaces if the forms are removed during the 5-day curing period.
- Cure the areas to be rubbed with liquid membrane-forming compounds for curing concrete, Type1-D, Class A or B (non-acrylic).
- Apply curing compound with fine-spraying equipment.
- Thoroughly agitate the compounds just before using them.
- Spray the surface again immediately after the first application at right angles to the first application.

Apply at least 1 gal (1 L) for each 150 ft^2 (3.7 m^2) of surface.

- Do not apply curing compound to the following:
  - Joints where a concrete bond is required
  - Reinforcement steel
  - Joints where joint sealer will be placed
- Close the surface to pedestrian or vehicular traffic for 7 days unless the surface is protected by planks, plywood, or a layer of sand at least 1 in (25 mm) thick.

  Do not place this protection until at least 12 hours after applying the curing compound.

3. Bridge Deck Curing

Cure bridge deck concrete as follows:

a. Immediately after the water sheen disappears and the surface finish is applied, fog the surface to keep a film of water on the surface.

b. If surface damage occurs, delay fogging.

c. Keep the surface wet until after applying the sheet curing covers.

d. Thoroughly soak curing covers on the fabric side.

e. As soon as the concrete sets enough to prevent damage, apply the covers with the white-poly side up.

f. Use two-layer sheet curing material for bridge concrete according to AASHTO M 171.

For the bottom layer, use a polyethylene film. For the top layer, use a white, burlap polyethylene sheet or a white, co-polymer-coated, absorbent, non-woven synthetic fabric.

g. Ensure that sheet curing material for bridge concrete meets Specification requirements for reflection and moisture retention and has no holes or tears.

h. Use enough sheet curing material to cover the deck surface.

i. Place the curing covers so that adjoining sheets overlap at least 18 in (450 mm).

j. Weight all laps and side edges to prevent cover displacement before curing is completed.

k. Weight and overlap covers so the curing sheets maintain intimate contact with the concrete surface.

l. If there is no moisture under the curing covers during the 5-day curing period, apply additional moisture.

4. Parapet, Sidewalk, End Post, and Curb Face Curing

The surface of parapets, sidewalk, end post, and horizontal and vertical faces of curbs are not considered part of the bridge deck. Cure these structures using the general curing methods in Subsections 500.3.05.Z.1, "General Curing—Supplying Additional Moisture," and 500.3.05.Z.2, "General Curing—Preventing Moisture Loss," unless the surfaces will receive a special surface coating (Subsection 500.3.05.AB.4, "Type III—Special Surface Coating Finish").

Do not cure surfaces receiving a special surface coating with membrane-forming curing compounds.

Do not cure surfaces receiving protection surface treatment (75 percent boiled linseed oil and 25 percent mineral spirits solution) with membrane-forming curing compounds that contain acrylics.

AA. Prevent Plastic Shrinkage Cracking

Take precautions to prevent plastic shrinkage cracking of concrete by doing the following:

- Provide wind screens
- Provide fogging equipment
- Apply temporary wet coverings before moisture loss begins

The Engineer will evaluate the effects of plastic shrinkage cracks and will require repair of cracks that create structural defects and corrode reinforcement steel.

AB. Finish Concrete

Concrete surface finishes are classified according to whether the surfaces are formed or unformed. Refer to Table 6.

When other Sections of the Specifications for concrete work state that the requirements of Section 500 apply, finish the concrete according to the other sections.

Table 6—Concrete Finish Types

Surface	Finish Type
Formed	Type I—Ordinary Formed Surface Finish
	Type II—Special Formed Surface Finish
	Type III—Rubbed Finish
	Type III—Special Surface Coating Finish
Unformed	Type IV–Floated Surface Finish
	Type V–Sidewalk Finish
	Type VI–Stair Tread Finish

Except for bridge deck finishes, which are covered in Subsection 500.3.05.T, "Place Bridge Deck Concrete," step 9, finish all structural concrete surfaces with one or more of the finishes described here, unless otherwise shown on the Plans.

1. Type I—Ordinary Formed Surface Finish

   Complete formed concrete surfaces with this finish. However, leave concrete exposed directly to sea water undisturbed unless the Engineer requires additional work. See Subsection 500.3.05.V, "Place Seal Concrete," step 6.

   Achieve a Type I finish as follows:

   a. Immediately after removing the forms, remove fins and surface irregularities.
   b. Fill or point up the following:
      - Cavities produced by forms or ties
      - Holes
      - Broken corners or edges
      - Defects
      - Honeycombed edges
   c. Remove and patch honeycombed areas to sound concrete.
   d. Use patch mortar that consists of the same sand and cement as the concrete. Use the sand and cement in the same ratio as in the concrete.

      Use epoxy mortars in areas where heat generation and moisture will not decrease patch performance.
   e. Cure the patches using one of the general curing methods specified in Subsection 500.3.05.Z.1, "General Curing—Supplying Additional Moisture" and 500.3.05.Z.2, "General Curing—Preventing Moisture Loss."
   f. Produce a sound and uniform finish.
   g. If the Type I finish is not satisfactory, give the surfaces a Type III—Rubbed Finish where the Engineer considers it necessary to achieve a uniform and pleasing appearance.

2. Type II—Special Formed Surface Finish

   Give a Type II finish to the following:

   - Exposed portions of pipe headwalls and culverts
   - Parapets and wingwalls
   - Ends of culvert slabs and walls

   Achieve a Type II finish as follows:

   a. Use a form liner unless the forms are made of plywood or steel.
   b. Rub only when necessary if the surface has a pleasing, uniform appearance after completing the Type I finish and blending all pointed and patched areas.
   c. If the surface finish is not satisfactory, give surfaces the Type III—Rubbed Finish where the Engineer considers it necessary to achieve a uniform and pleasing appearance.

3. Type III—Rubbed Finish

   Apply a Type III finish to bridge areas checked in the table of Bridge areas Requiring a Type III Finish, below and to exposed areas of retaining walls, unless the Plans specify otherwise.

   Achieve a rubbed finish as follows:

   a. Begin the first rub immediately after removing forms, completing the Type I finish, and ensuring that all patches are thoroughly set, but before applying the required curing compound.

      If finishing is postponed or there is not enough labor to keep it up-to-date, the Engineer will order a stop to any other work until the finishing is satisfactory.
   b. Rub chamfered surfaces only once, but not during the first rubbing. Rub chamfered surfaces during either the second or the final rubbing.
   c. To rub, wet the moist concrete on the curing surface with a brush and rub with a medium-coarse carborundum stone or equal abrasive until a paste comes to the surface.

      Keep the entire concrete surface moist during rubbing to assure adequate curing.

d. Continue rubbing until all form marks and projections disappear, leaving a smooth, dense surface with no pits or irregularities.

e. Spread the paste material carefully and uniformly over the entire surface and leave it.

f. No earlier than 24 hours after the first rub, do the final rub with a fine carborundum stone or equal abrasive, leaving a smoothly textured surface that is uniform in color.

g. Finish the final rub before applying protective surface treatment required by the Plans.

h. Do not "whitewash" finished areas by using separately mixed grout or paste on the rubbing stone or by spreading it on the surface to be rubbed.

i. Thoroughly clean and blend into the surrounding surfaces any areas that are disfigured by drips from concrete placement or rubbing.

Bridge Areas Requiring a Type III Finish (X)								
	Single Bridge Over Stream	Multiple Bridges Over Stream	Single Bridge Over Railroad	Multiple Bridges Over Railroad	Single Bridge Over Traffic Artery	Multiple Bridges Over Traffic Artery	Railroad Bridge Over Traffic Artery	Pedestrial Bridge Over Traffic Artery
All exposed substructure areas, except tops and bottoms of caps. **(5)**					X	X	X	X
Outside surface of any exterior concrete beam, Lt. or Rt. **(1), (2)**		X		X				
Outside surface of any exterior concrete beam, Lt. and Rt. **(1), (3)**					X	X	X	X
Vertical surfaces of overhangs, curb, or sidewalk.	X	X	X	X	X	X	X	X
All vertical surfaces outside of exterior beam, Lt. or Rt. **(2)**		X		X				
All vertical surfaces outside of exterior beam, Lt. or Rt. **(3)**					X	X	X	X
End bent cap beyond outside beam or girder.	X	X	X	X				
End bent end walls beyond outside beam or girder.	X	X	X	X	X	X	X	X
End posts and end bent wingwalls all exposed surfaces.	X	X	X	X	X	X	X	X
Traffic face of curbs.	X	X	X	X	X	X		X
Entire handrails and posts, hand rail parapet, and barriers. (4), (5)	X	X	X	X	X	X	X	X
All other locations specified on Special Provisions.	X	X	X	X	X	X	X	X

Notes:

(1) —Including Prestressed Concrete Bridge Members.

(2) —"Lt. or Rt."–Rub the applicable surface when it can be seen from any adjoining bridge.

(3) —"Lt. and Rt."—Rub the applicable surfaces on both sides of centerline of each bridge.

(4) —rubbing of bottom surface of rail not required.

(5) —Bottoms of caps and handrails shall be given a Type II finish.

For bridges using PSC Beams or PSC Deck Units, a Type III Special Surface Coating Finish shall be used where a Type III finish is required for exterior beams. The Type III Special Surface Coating Finish shall also be used on the exterior vertical faces of the parapet, barrier, and overhangs where PSC Beams or PSC Deck Units are used.

4. Type III—Special Surface Coating Finish

A Type III—Special Surface Coating Finish may be substituted for a Type III—Rubbed Finish.

The special surface coating finish consists of either a Class A or a Class B coating system, applied to produce a masonry-like textured finish on concrete surfaces.

For contiguous structures, whether in the same Contract or in separate Contracts, use the same brand of special surface coating.

If contiguous structures are in separate contracts, coordinate the Work with the other Contractor so that coating is applied as near as possible to the same time.

If contractors cannot coordinate Work, the one who finishes the work last shall use the same brand or shall recoat all contiguous areas to provide a uniform appearance.

Achieve a special surface coating finish as follows:

a. Ensure that surface coating material meets the requirements of Section 836.

   Select coating material from the QPL 17.

b. Do not use form oils that affect the bonding of surface coatings.

c. Do not use wax-based or other curing compounds incompatible with surface coatings.

   Have the coating manufacturer or the laboratory determine compatibility.

d. Use the coating color required in Section 836.

e. On surfaces that will receive a coating finish, do not cure with membrane-curing compound or remove forms with bond-breaking agents or excessive oil.

f. Apply coatings as follows:

   - Class A coatings at a rate that develops a 1/16 in (1.5 mm) thick coating.
   - Apply Class B coatings at a maximum rate of 60 ft² per gallon (1.5 m² per liter).
   - Ensure that the temperatures of the air, concrete, and compound are above 50 °F (10 °C).
   - Apply a test section as directed by the Engineer to determine the acceptance of a coating under field conditions.
   - Apply the coatings using a method that produces an acceptable finish, such as spraying, rolling, or a combination of these.

g. Protect coated surfaces from rain or freezing temperatures for 24 hours after application.

h. Ensure that the final coating produces a smoothly textured surface that is uniform in color, thickness, and appearance.

i. Remove and reapply coatings that chip, crack, blister, peel, or present an unsatisfactory appearance.

j. If the final appearance is unsatisfactory, apply a rubbed finish to slip-formed and formed walls and barriers.

5. Type IV—Floated Surface Finish

   Use a Type IV finish only on the horizontal surfaces of the following:

   - Curbs and sidewalks
   - Tops of caps and footings
   - Surface of slope paving
   - Other similar structures

   Apply the Type IV finish as follows:

   a. After compacting the surface and screeding to the correct cross sections, float the surface with a wood float.

   b. While floating the surface, bring enough mortar to the surface to achieve the desired finish, but do not reduce the wearing quality of the surface.

   c. Make the final finish with a wood float or stiff-bristle broom.

   d. If brooming, make the marks transverse to the traffic.

6. Type V—Sidewalk Finish

   Apply a Type V finish as follows:

   a. After placing and compacting the concrete, strike it off and give it a Type IV finish.

b. Use an edging tool on all edges and along expansion joints unless the Plans require chamfers.

c. Mark off sidewalk surfaces in blocks with suitable grooving tools when required by the Plans or the Engineer.

d. Extend the rubbed finish on the traffic face of the curb to include the horizontal area of sidewalk between the curb corner and the longitudinal sidewalk groove.

7. Type VI—Stair Tread Finish

Achieve a Type IV finish using a stiff-bristled broom.

AC. Remove Forms

Do not remove forms and their supports, including falsework, until the Engineer approves. Use a removal method approved by the Engineer. Approval does not relieve responsibility for the safety of the Work.

1. Form Removal Time

Use a removal time shown on the Plans or specified by the Engineer.

Use Table 7 to help establish when forms can be removed safely. However, do not count days where the temperature at any time during the day is at or below 40 °F (4 °C), unless the cold weather concrete protective measures described in Subsection 500.1.03.G, "Cold Weather Concrete Curing and Protection Plan" were used.

Table 7—Estimate of Form Removal Time

Form	Time Required
Bottom of beams	10 days
Bottom of caps, trestle pile bents	4 days
Bottom of all other caps	7 days
Overhangs and slabs, including culverts	7 days
Columns and retaining walls	18 to 48 hours
Sides of beams, posts, rails, caps, footings, wingwalls, and parapets	12 to 24 hours
Bottoms of cast-in-place rails and diaphragms	48 hours
Front face of curbs	3 hours

If using high-early strength concrete, the Engineer may reduce the time limitations if the concrete develops satisfactory strengths.

2. Form Removal Method

Remove forms and falsework without injuring the concrete surface or overstressing the concrete members.

Ensure that the stress from the weight of the removal process is transferred gradually and uniformly to the concrete.

At the Contractor's request, time of removal may be controlled by field tests on cylinders, subject to the following conditions:

a. No tests will be performed until concrete is a least 3 day s old.

b. Required strengths will be shown on the Plans, as noted elsewhere in these Specifications, or as determined by the Engineer.

c. The Engineer may specify a minimum time in conjunction with minimum strength requirements.

d. Falsework and forms for culverts may be removed at such time as 75% of the concrete design strength is achieved.

AD. Apply Protective Surface Treatment

When the Plans specify a protective surface treatment, apply a boiled linseed oil mixture of 75 percent boiled linseed oil and 25 percent mineral spirits by volume to the concrete surfaces.

Use linseed oil that meets the requirements of ASTM D 260, Type I or Type II. Use a quality commercial mineral spirit that passes infrared spectroscopic analysis to the satisfaction of the laboratory.

Unless otherwise noted on the Plans or the manufacturer's recommendations, apply the mixture as a preservative seal coat to the top surfaces of bridge decks, curbs, and sidewalks and to the inside vertical faces of curbs, parapets, and end posts. Protect metal handrailing and metal handrail posts from treatment.

Apply the protective surface treatment as follows:

CAUTION: Because the linseed oil-petroleum spirits mixture has a low flash point and is readily flammable, protect the mixture from fire, especially cigarettes and sparks. Prohibit traffic from the treated area until the Engineer determines the concrete has regained its dry appearance.

1. Do not place the protective surface treatment until concrete work, including final rubbing, is completed and expansion joint sealing compound is placed.
2. Do not apply the treatment until the concrete is at least 14 days old.
3. Unless otherwise permitted by the Engineer, apply the treatment when the temperature of the concrete and air is at least 50 °F (10 °C).
4. Apply in time to allow the treatment to dry thoroughly before allowing traffic, including haul traffic, on the structure.

   If the structure meets the following exceptions, apply the treatment after using the structure for hauling.

   - Temperature limitations prohibit application.

     The Engineer will send a written notification to the Contractor (or Bridge Contractor) if temperature requirements prohibit application.
   - The structure is absolutely required for hauling to complete a Contract.

     Request a written approval from the Engineer if hauling across a structure before the treatment is placed.
5. If applying the treatment after using the structure for hauling, thoroughly clean the surfaces to be treated to allow the treatment to penetrate completely.
6. If there are separate bridge and roadway Contracts, have the roadway Contractor clean the surfaces immediately upon request by the Engineer.
7. Prepare the surface for the treatment as follows:
   a. Clean off oil, grime, and loose particles that prevent the mixture from penetrating.
   b. Ensure that the concrete surfaces have at least 48 hours to dry after rainfall or wet cleaning operations.
   c. Immediately before applying the treatment, direct an air blast over the surfaces to remove dust.
   d. Mask the exposed plates of joints.
8. Apply the mixture by hand or by spraying in one application at the rate of 1 gal (1 L) of mixture per 37.5 yd^2 (8.5 m^2).
   a. Thoroughly clean the inside of spraying equipment before putting the surface treatment in.
   b. Keep spray nozzles within 18 in (600 mm) of the concrete unless otherwise directed by the Engineer, Plans, or manufacturer.

AE. Apply Graffiti-Proof Coating

When the Plans specify a graffiti-proof coating, apply the coating system to concrete surfaces or over special surface coatings. Use material that complies with Section 838.

Apply the coating as follows:

1. Clean loose particles, dirt, grease, oil, and other foreign particles off the surface.
2. Apply the coating according to the manufacturer's recommendations for:
   - Weather conditions
   - Material preparation

- Coating application
- Number of coats

AF. Expose New Concrete to Loads

Prohibit dead or live loads during or after construction except as described in this section. If using high early strength concrete, the Engineer may reduce time limitations if the concrete develops adequate strength.

1. Dead Loads on the Substructure

   After pouring footings, do not begin work on columns or piers for at least 12 hours.

   After pouring columns, do not begin cap construction for at least 24 hours.

   Do not place beams on caps or place falsework and forming for concrete T-Beam construction before the cap concrete reaches a minimum strength of 2,500 psi (17 MPa).

2. Dead Loads on the Superstructure

   If necessary, stockpile construction materials on decks within a complete unit (a simple span or continuous or cantilever unit) if the following conditions exist:

   - The deck concrete of the complete unit reaches its 28-day cylinder strength.
   - The deck concrete is at least 10 days old.
   - The curbs are at least 5 days old.

   The Engineer must approve the location, height, and spread of the loads.

   On composite-design bridges (those that have prestressed concrete beams or steel beams with shear connectors), do not pour curbs, parapets, or sidewalks until the deck concrete reaches a minimum strength of 1,500 psi (10 MPa) or is at least 3 days old.

3. Dead Loads on Concrete Box Culverts

   Do not backfill any section of a concrete box culvert until the last concrete placed in that section is at least 14 days old, unless early cylinder breaks indicate otherwise.

   If early cylinder breaks indicate that design strength has been achieved, backfill sections of culverts when the concrete placed last is at least 7 days old.

4. Live Loads—Pouring Equipment

   Do not allow power-operated concrete buggies to cross a deck until the concrete reaches a minimum strength of 1,500 psi (10 MPa) or is at least 3 days old.

   Allow hand-operated buggies to cross after the concrete is 24 hours old.

5. Live Loads—Mixing and Lifting Equipment

   Do not place mixers on a deck in a complete unit (a simple span or continuous or cantilever unit) until the deck concrete of the complete unit reaches its 28-day cylinder strength and is at least 10 days old.

   When deck concrete reaches its 28-day cylinder strength and is at least 10 days old, allow mixer trucks on the unit during the curb concrete pour only if the pour is completed within 45 minutes of being started.

   Do not allow any equipment on the unit for 5 days after curb pours.

   The Engineer may allow concrete placement procedures that use heavy lifting equipment on the decks if the following conditions exist:

   - The deck concrete reaches its 28-day cylinder strength.
   - The deck concrete is at least 14 days old.
   - The curbs on the deck are at least 10 days old.

6. Live Loads—Hauling over Bridges

   Use a new bridge for hauling only if no other practical haul routes are available and only if the Engineer permits it.

   a. Govern hauling by the restrictions and requirements listed in Table 8. If any of the restrictions and requirements are violated, the Engineer will limit loads to the following:

- Single 32,000 lb (14 515 kg) axle when the bridge design loading is HS 20-44 and/or Military Loading
- Single 24,000 lb (10 886 kg) axle when the bridge design loading is HS 15-44 or H 15-44

Table 8—Weight Limits for Hauling on New Bridges

Axle Criteria	Bridge Design Loading	
	HS 20-44 and/or Military Loading	HS 15-44 or H 15-44
Maximum Axle Load Per Axle	60,000 lbs (27 216 kg)	44,000 lbs (19 958 kg)
Maximum Axle Load on Dual Axles Per Axle	45,000 lbs (20 412 kg)	33,000 lbs (14 969 kg)
Maximum Total Load	100,000 lbs (45 360 kg)	73,000 lbs (33 113 kg)

b. Ensure that bridge concrete, including curbs, parapets, barriers and sidewalks, is at least 14 days old and has a minimum compressive strength of 3,000 psi (20 MPa).

c. Apply the linseed oil special protective treatment, if required see (Subsection 500.3.05.AD, "Apply Protective Surface Treatment").

d. . After applying the protective treatment (if required), apply water-repellent silicone materials to the handrail, handrail posts, end posts, and curb faces before hauling begins.

e. Do not allow more than one vehicle at a time on a simple or multiple-span unit.

f. Ensure that vehicle speeds, loaded or unloaded, do not exceed 5 miles/hr (8 km/hr) when the following loads occur:

- Bridges designed for HS 20-44 and/or Military Loading:
  - Loads on single axles exceed 32,000 lbs (14 515 kg)
  - Loads on each dual axle exceed 24,000 lbs (10 886 kg)
- Bridges designed for HS 15-44 or H 15-44 loading:
  - Loads on single axles exceed 24,000 lbs (10 886 kg)
  - Loads on each dual axle exceed 16,000 lbs (7257 kg)

When axle loads do not exceed these loads, ensure that vehicle speeds are 15 mph (24 kph) or less.

g. Place temporary guides on beams so wheels will track directly.

h. Keep earth approaches smooth and level with the bridge floor or approach slab to minimize impact.

Stabilize sandy and other unstable soils (at no expense to the Department) with crushed stone or other suitable material for at least 10 ft (3 m) from the end of the bridge or approach slab.

i. Protect the ends of bridges or approach slabs with a timber strip at least 4 in (100 mm) wide, cut to rest on either the paving rest of the bridge end or the pavement subgrade at the end of the approach slab. Keep the strip in place for protection during incidental hauling. Remove it before constructing the adjacent pavement.

Keep the top of each timber strip flush with the top of the concrete surface. Fit the strip tightly against the end of the bridge or approach slab. If the timber strip is displaced, stop hauling until the strip is reset or replaced.

j. Clean spills off the bridge floor.

AG. Complete Corrective Work

After the Department gives the deck surface a Ride Quality Test described in Subsection 500.3.06.E, "Ride Quality Test," complete corrective work at no cost to the Department and before doing the final surface texturing.

Complete corrective work as follows:

1. Plane the deck according to Section 431.
2. Limit concrete removal by planing so that the final bar cover is not less than the Plan cover minus 1/2 in (13 mm).
3. If the final bar cover limits cannot be met, perform the corrective work as directed by the Engineer.

4. Ensure that the final riding surface complies with this Specification and the requirements for a grooved finish.
5. If necessary, use a bump grinder to correct bumps with a profile base line of 5 ft (1.5 m) or less.
6. Have planed decks retested as described in Subsection 500.3.06.E, "Ride Quality Test," to ensure that the ride quality meets the requirements of this Specification.

AH. Plane the Deck

Schedule the ride quality test at least 5 days before needed by contacting the Office of Materials. Ensure that the area to be tested is clean and clear of obstructions.

When possible, delay expansion joint installation and temporarily bridge the joint to operate Lightweight Profiler and planning equipment across the joint.

Planning responsibilities are shown in Table 9:

Table 9—Planning Responsibilities

Area Planed	Person Responsible
Bridge decks	Bridge Contractor
Approach slabs constructed under the bridge Contract	Bridge Contractor
Approach slabs constructed under the roadway Contract	Roadway Contractor

AI. Perform Retaining Wall Incidentals

Retaining wall incidentals are as follows:

1. Drainage

   Unless otherwise shown on the Plans or in the Special Provisions, ensure that drainage for retaining walls is either Alternate A or Alternate B on Georgia Standards 4948 and 9031-L.

   Ensure that the Number 10 concrete sand complies with Subsection 801.2.02, "Fine Aggregate for Portland cement Concrete of All Types and for Mortar" and has a permeability coefficient of at least 100 ft (30 m) per day.

   The Engineer may waive the grading requirement for Number 10 concrete sand if the permeability coefficient of the material does not exceed 500 ft (150 m) per day.

   Omit the drainage blanket and stone for retaining walls only when the height does not exceed 6 ft (1.8 m).

   When the Plans specify different drainage details, furnish, place, or build the various items according to the Plan requirements.
2. Waterproofing and Dampproofing

   When waterproofing and dampproofing are specified in the Plans, comply with the requirements of Sections 530 and 531.

AJ. Place Utility Installation Hardware

When the Plans require placing utility installation hardware, the utility company involved will furnish the items.

Place the items as directed on the Plans or Shop Drawings. All other work, including painting as required, is the utility company's responsibility.

AK. Widen Bases and Pavement

When using narrow sections of Portland cement concrete to widen existing bases or bases and pavements, use Class B concrete as shown on the Plans or as directed by the Engineer.

AL. Open the Structure to Traffic

Open a structure to traffic other than haul traffic after all concrete in the decks, parapets, or curbs (sidewalks) reaches its 28-day cylinder strength and is at least 14 days old.

500.3.06 Quality Acceptance

A. Strength Requirement Tests

When job site test specimens fail to meet the strength requirements in the Table 1—Concrete Mix Table , determine the Final Acceptance or rejection of concrete in place by coring or non-destructive testing.

At the Contractor's request, the Department will determine the removal time for forms by conducting field tests on cylinders.

Tests are subject to the following:

1. Tests will be performed when the concrete is at least three days old.
2. The Plans will show the required strengths.
3. At the Contractor's request, the Engineer may specify a minimum time with minimum strength requirements.

B. Honeycombed Area Check

If there are honeycombed areas that extend beyond the reinforcement steel, the Engineer may reject the entire pour with the honeycombed area.

C. Bridge Deck Slab Concrete Inspection

The Engineer will carefully observe the construction methods used during all phases of the bridge deck slab construction. These phases include the following:

- Metal form installation
- Reinforcement location and fastening
- Concrete item composition
- Mixing procedures
- Concrete placement and vibration
- Bridge deck finishing

Provide the needed facilities for the Engineer to safely and conveniently inspect the concrete.

The concrete inspection procedure is as follows:

1. After the deck concrete has been in place for at least two days, the Engineer will sound a hammer on at least two areas of the deck for each slab pour. This test checks for concrete soundness and form bonding.

   The two areas will encompass at least 10 percent of the total area of the deck pour.
2. The Engineer will sound other areas of the deck randomly.
3. If the Engineer doubts the soundness of an area, or if the Engineer decides that the concrete placement procedures used call for an inspection of the underside of the deck, remove at least one section of the forms for each span in the Contract.
4. Remove the form section after the pour is strong enough and when the Engineer desires to provide visual evidence that the concrete mix and the placement procedures are acceptable.
5. Remove another form section if the Engineer decides changes in the concrete mix or in the placement procedures warrant additional inspection.
6. Where form sections are removed, do not necessarily replace the forms, but repair the adjacent metal forms and supports neatly and securely.
7. When the form is removed, the Engineer will examine the concrete surfaces for cavities, honeycombing, and other defects.
8. If the Engineer finds irregularities but determines that the irregularities do not justify rejection of the Work, repair the concrete as the Engineer directs and give it an ordinary surface finish according to the Contract Specifications.

9. If the concrete where the form is removed is not acceptable, remove additional forms as necessary to inspect and repair the slab.
10. Modify the construction methods as required by the Engineer to create satisfactory slab concrete.
11. Remove or repair all unsatisfactory concrete as the Engineer directs.

    If the construction methods used and the inspection results indicate that the slabs have sound concrete, the Engineer may moderate the amount of random sounding and form removal after a substantial amount of slab has been constructed and inspected.

D. Bridge Deck Surface Check

After the final strike-off of the concrete and as close behind the final strike-off as possible, the Engineer will check the surface with a 10 ft (3 m) straightedge.

Attach the straightedge to a broom-type handle for easy control and use.

Bridges and approach slabs must meet a 1/8 inch in 10 ft (3 mm in 3 m) straightedge check made longitudinally and transversely.

E. Ride Quality Test

After the bridge decks and approach slabs are completed, the Department will perform a Ride Quality Test using the Lightweight Profiler and a profile index value determined according to GDT 134.

The Department will conduct the test as follows:

1. Obtain Profile Index Values for bridge decks and approach slabs for:

   State roads with four lanes or more

   - State roads with 2 lanes where the current traffic count is 2,000 vehicles per day or higher
   - Other roads designated on the Plans
   - Bridges and approach slabs must meet the straightedge check limits described in Subsection 500.3.06.D, “Bridge Deck Surface Check.”
2. Obtain profiles in the wheel paths and in safety areas to within 6 ft (1.8 m) of barrier or curb lines.
3. Average the profile index values for bridge decks including the approach slabs for the left and right wheel path for each lane.

   The average value must not exceed 15 in/mile (235 mm/km) for each lane.

After the test is complete, correct individual bumps or depressions that exceed 2/10 in (5 mm) from the blanking band on the profiler trace.

The deck surface must then meet a 1/8 inch in 10 ft (3 mm in 3 m) straightedge check made transversely.

Correct bridge decks and approach slabs that do not pass the Ride Quality Test as described in Subsection 500.3.05.AG, “Complete Corrective Work.”

500.3.07 Contractor Warranty and Maintenance

General Provisions 101 through 150.

500.4 Measurement

This work is measured for payment either per cubic yard (meter), per Lump Sum, or per linear foot (meter), whichever is shown on the Plans.

- **Seal Concrete.** The quantity of seal concrete to be measured for payment is calculated using the horizontal seal dimensions specified on the Plans.
- **Grooving.** Grooving on bridge decks and approach slabs, completed acceptably according to Subsection 500.3.05.T, “Place Bridge Deck Concrete,” step 9.c, will be measured and paid for by the square yard (meter). Payment is full compensation for furnishing the necessary equipment and performing the Work.

- **Class B Concrete.** Class B concrete used for base and pavement widening will be measured and paid for by the cubic yard (meter) complete in place and accepted.

500.4.01 Limits

A. Measurement for Separate Payment

There will be no separate measurement and payment for the following:

1. On permanent steel bridge deck forms for concrete deck slabs:
   - Extra reinforcing
   - Extra concrete
   - Other costs incurred because of the requirements of this Specification

   All costs are included in the Lump Sum prices bid for superstructure concrete and superstructure reinforcement.

B. Payment per Cubic Yard (Meter)

Measurement limits on payment per cubic yard (meter) are:

1. Bridges, Concrete Culverts, Headwalls, and Retaining Walls

   The quantity of concrete measured for payment is the algebraic summation of the Base Pay Quantity and authorized quantity changes.

   If additional quantities are necessary because of any of the following, these quantities are measured separately for payment:
   - Rocks were removed carefully but additional quantities are needed because footing depth and keyway dimension are irregular from unanticipated rock removal.
   - Voids or crevices exist within the spread footing area.
   - The Engineer authorized filling trenches cut in rock outside footing areas to ease dewatering.

   These additional quantities will be paid as filler concrete per cubic yard (meter).
2. Seals

   When the Plans do not require a seal but a seal becomes necessary, or when the Plans do not show seal dimensions, the maximum pay dimensions in each direction will be the Plan dimension of the structural footing plus 3 ft (1 m), with 18 in (600 mm) on each side.

   If the Contractor uses lesser dimensions, measurement is based on the lesser dimensions. Concrete placed beyond the maximum pay limits are not measured.

C. Payment per Lump Sum

For Lump Sum payment, determine the quantities required before submitting the bid.

The concrete quantity must conform to the Plan dimensions. Measurement is made as a unit, complete in place, and includes the following:

- Diaphragms
- Sidewalks
- Concrete parapets

Measurement does not include concrete in the following items that will be paid for separately:

- Concrete handrailing
- Barriers
- Prestressed bridge members.

Payments for parapets placed by slip-form method is included in the Lump Sum price bid for superstructure concrete.

Unless otherwise shown on the Plans, the cost of steel joints and metal bearing assemblies used in structures where there is no structural steel Pay Item are included in the Contract Price for superstructure concrete.

D. Retaining Wall Incidentals

Retaining wall incidentals will be measured for payment as follows:

1. Drainage Systems

   Drainage items required by Special Plans are measured for payment by the unit specified on the Plans only when they are set up as specific Pay Items and are paid for separately. Otherwise, their costs are included in the Contract Price for concrete.

   Payment is full compensation for the costs of excavation and backfill necessary to place the drainage items required by Special Plans.

   The following are not measured for separate payment. Costs are included in the Contract Price for concrete.

   - Sand blankets
   - Crushed or broken stone
   - Weep holes

2. Miscellaneous

   The following are not measured for separate payment. Costs are included in the Contract Price for concrete.

   - Expansion material
   - Rubber or polyvinyl plastic water stops

E. Utility Installation Hardware

The cost of placing utility hardware items is included in the Contract Price for the class of concrete the items are placed in.

500.5 Payment

This Work will be paid for at the Contract Price per cubic yard (meter), per Lump Sum, or per linear foot (meter), each complete in place and accepted.

Payment is full compensation for all things, including incidentals, and direct and indirect costs, to complete the Work.

Payment will be made under:

Item No.	Item	Payment
500	Superstructure concrete class_____, Bridge no._____	Per lump sum
500	Concrete handrailing (designation)	Per linear foot (meter)
500	Class_____concrete	Per cubic yard (meter)
500	Class_____concrete, high-early strength	Per cubic yard (meter)
500	Seal concrete	Per cubic yard (meter)
500	Class B concrete base or pavement widening	Per cubic yard (meter)
500	Class_____concrete including reinforcement steel	Per cubic yard (meter)
500	Class A concrete—filler	Per cubic yard (meter)
500	Class_____concrete—retaining wall	Per cubic yard (meter)
500	Grooved concrete	Per square yard (meter)
500	Concrete barrier	Per linear foot (meter)

500.5.01 Adjustments

A. Contractor Costs

Assume the following costs:

1. Costs related to rejected concrete and removing rejected concrete
2. Costs of forming an approved construction joint, removing a partial pour, or completing other remedial measures requested by the Engineer unless the fault lies solely with the Department
3. Costs of repairing, removing, and replacing falsework as directed by the Engineer
4. Costs of repairing, removing, or replacing forms
5. Costs of air-blown mortar to repair honeycombed areas, if required by the Engineer
6. Costs of using a higher class of concrete to widen existing bases or bases and pavements

B. Ride Quality Testing

The Department will conduct ride quality testing of bridge decks and approach slabs only twice per bridge at no cost to the Contractor.

The Department will conduct additional ride quality testing at the cost of $500 per test.

C. Plastic Shrinkage Crack Repair

The Engineer will determine how to repair cracks caused by plastic shrinking. Repair cracks at no cost to the Department.

D. Plan Quantities

For all bridges (except seal concrete), concrete culverts, headwalls, and retaining walls, the quantities shown on the Contract Plans, including Standard Plans, will be considered the Base Pay Quantity.

For seal concrete, the Plan quantities are approximate and are for estimating purposes only. The quantities will not be considered as Base Pay Quantities.

Calculated additions or deductions will be applied to the Base Pay Quantity when the Engineer makes authorized changes. Changes include, but are not limited to, authorized changes in the following:

- Footing dimensions
- Lengthening or shortening of concrete culverts
- Correcting Plan Quantities
- Dimension errors
- Multi-barrel culvert wall thicknesses
- Lengthening or shortening bridge columns
- Raising or lowering foundations

Calculations of the Base Pay Quantity and any changes will be made as follows:

1. No deductions will be made for the volume of concrete used by scorings, panels, and chamfers if the individual areas are less than 1 in^2 (625 mm^2).

   The volume of concrete in fillets of the same area will be neglected.
2. The volume of structural steel and of steel and concrete piling encased in concrete will be deducted.
3. The volume of timber piling encased in concrete will be deducted on the basis of 0.8 ft^3/linear foot (0.07 m^3/linear meter) of pile.
4. No deduction will be made for the volume of concrete displaced by the following:
   - Steel reinforcement
   - Shear connectors

- Floor drains (unless they are paid for as separate Pay Items)
- Incidentals such as expansion material
- Joint sealing compound
- Utility thimbles and hangers

E. Filler Concrete

Filler concrete, measured as described in Subsection 500.4.01.B.1, "Bridges, Concrete Culverts, Headwalls, and Retaining Walls," will be paid at 40 percent of the Contract Price per cubic meter for Class A Concrete or Class AA Concrete.

F. Seal Concrete

If there is no Contract Price for seal concrete, payment will be per cubic yard (meter), measured as described in Subsection 500.4.01.B.2, "Seals," and will be paid at 60 percent of the Contract Price per cubic yard (meter) for Class A concrete.

G. Lump Sum Payment Adjustments

Adjust the payment as follows:

1. Authorized Change Adjustments

   When authorized changes are made as described in Subsection 500.5.01.D, "Plan Quantities," the lump sum payment may be adjusted on a pro rata basis or according to Section 104 and as determined by the Engineer.

   The Plans show tabulated quantities as a service. This does not relieve any responsibility to conform to Plan details.
2. Optional Plan Feature Adjustments

   If exercising an optional Plan feature, the Base Pay Quantity will not be changed if it is the only quantity change involved.

   However, if other changes are necessary, the quantity change resulting from the optional feature will be considered in the necessary quantity adjustments.
3. Falsework for Post-Tensioned Box Girder Bridge Adjustments

   When the falsework is completed for post-tensioned box girder bridges, 20 percent of the Lump Sum superstructure concrete price will be paid.

   Additional payments made as the concrete is placed must be adjusted for the payment for falsework. In other words, payment for concrete placed will be based on 80 percent of the superstructure bid price.
4. When Metal Deck Forms are used and have been placed, payment in the amount of 5% of the Lump Sum Superstructure Concrete price will be made. For Post-Tensioned Box Girder Bridges, this percentage (5%) will apply to that part of the superstructure concrete in the top slab of the box only.

Section 501—Steel Structures

501.1 General Description

This work includes furnishing and building with structural steel and miscellaneous metals to the lines, grades, and dimensions shown on the Plans or established by the Engineer.

The work does not include bearing devices for prestressed concrete bridge members, utility installation hardware, or any metal covered under another Pay Item.

501.1.01 Definitions

HTS Bolts: High Tensile-Strength bolts.

501.1.02 Related References

A. Standard Specifications

Section 109—Measurement and Payment

Section 500—Concrete Structures

Section 512—Shear Connectors

Section 535—Painting Structures

Section 851—Structural Steel

Section 852—Miscellaneous Steel Materials

Section 854—Castings and Forgings

Section 857—Bronze Bushings, Bearings, and Expansion Plates

Section 870—Paint

Section 881—Fabrics

Section 885—Elastomeric Bearing Pads

B. Referenced Documents

ANSI/AASHTO/AWS D 1.5

AISC Manual of Steel Construction

ANSI B1.13 Class 2A

ANSI 2.5, 3.2, 6.3, 12.5, 25, 46, 46.1 Part 1, 50

ASTM A 6/A 6M

ASTM A153/A 153M

ASTM A 325 (A 325M)

ASTM A 490 (A490M)

ASTM A 919

ASTM F 568M Class 4.6

501.1.03 Submittals

A. Pre-Inspection Documentation

Furnish documentation required by the latest ANSI/AASHTO/AWS D 1.5 under radiographic, ultrasonic, and magnetic particle testing and reporting to the State's inspector before the quality assurance inspection.

B. Shop Drawings

Prepare Shop Drawings for structural steel and other metal materials to be fabricated. Show the details necessary for shop fabrication and field erection.

1. **Description.** Use the standard sheet size of the Department's Bridge Office. Submit at least two complete sets of preliminary prints marked "NOT FOR FIELD USE" to the Department's Bridge and Structural Design Engineer (the Bridge Engineer) for review before fabricating materials.

   As an option, shop drawings may be submitted on plan sheet sizes of 12" x 18" (305 mm x 457 mm) or 11" x 17" (279 mm x 432 mm) for review and approval. Information contained on these sheets must be legible.

After shop drawings have been approved, submit an electronic file that is compatible with Bentley Microstation J (Version 7) Cadd operating system, or an electronic file in Adobe Acrobat Portable Document Format (.pdf) to the Engineer. For bridges carrying railroads only, after shop drawings have been approved, submit one full size set of reproducible drawings to the Department.

2. **Review Process.** After the preliminary prints have been reviewed and revisions have been made, submit 5 or more complete sets of the final drawings to the Bridge Engineer. The Bridge Engineer will mark each drawing with a conditional approval stamp and return one stamped set to the fabricator. Furnish the Bridge Engineer with as many additional sets of final prints as required.

   The Bridge Engineer's review and conditional approval of Shop Drawings is a service for the Contractor. The Department assumes no responsibility for the accuracy of the drawings, and the Contractor will not be relieved of any responsibility for conforming to the Specifications and Plans.

3. **Railway Structures.** For structures carrying railway traffic and for other structures when specifically designated, furnish the Bridge Engineer a full set of permanent reproducibles of the final Shop Drawings.

4. **Welded Construction.** On Shop Drawings for welded construction, use the standard welding symbols of the American Welding Society. Explain special conditions in notes or details. Show the sequence and techniques for areas where shrinkage stress and distortion control is necessary.

5. **Changes and Substitutions.** Do not change a Shop Drawing after it has been conditionally approved unless the Bridge Engineer gives written consent. List and symbolize revisions on each drawing.

   Obtain written consent from the Bridge Engineer before substituting materials with dimensions and weights other than those shown on the Plans. Make changes associated with an approved substitution at no expense to the Department.

6. **Alternate Locations of Splices and Connections.** If splices or connections are desired at locations other than those shown on the Plans, submit a proposal and Shop Drawings to the Bridge Engineer to get written approval before proceeding.

7. **Steel Identification.** Upon request, furnish an affidavit certifying the identification of steel is maintained throughout fabrication.

   On the Shop Drawings, show the grade of steel to be used and identify each piece. Give pieces made of different types or grades of steel different assembly or erection marks.

   Maintain the identity of the mill test report number when assembly-marking individual pieces and when giving cutting instructions to the shop.

C. Fabrication Schedule

Ensure that the fabricator submits a proposed fabrication schedule to the State Materials Engineer that includes the following:

- Correct project number, including county
- Bridge number
- Starting date
- Estimated completion date

D. Quality Control Program

Before fabrication begins, submit the fabricator's written Quality Control program to the Office of Materials for approval. This program and its personnel will be subject to verification when the Department's Materials Engineer deems necessary.

Even with a State inspection, continue to perform Quality Control (QC) on all nonfracture-critical and fracture-critical members and components.

E. Mill Orders and Shipping Statements

Furnish the number of copies of mill orders and shipping statements covering fabricated materials and related miscellaneous materials the Engineer directs. Show the weights of individual members on the statements.

F. Mill Test Reports

Furnish the Engineer two certified, legible copies of mill test reports that show the results of physical tests and complete ladle analyses for each heat and grade of steel ordered. Refer to the ASTM designation of tests used. Furnish mill test reports at no expense to the Department.

G. Welding Procedures

Before structural steel fabrication begins, submit welding procedures to the Engineer for review and approval.

H. Electrode Testing

Furnish a manufacturer's certification showing that the material requirements used for manufacturing the tested electrodes and furnished electrodes were the same for each lot of electrodes on the Project.

I. Falsework

If required, prepare and submit falsework plans for the Engineer's review. Continue to assume the responsibility to produce safe falsework. When erection is completed, remove falsework to the Engineer's satisfaction.

J. Camber Diagram

Furnish the Engineer a diagram showing the camber at each splice point for each girder. Base the diagram on measurements taken during shop assembly. In the case of partial shop assembly, base the camber diagram on theoretical calculated values.

501.2 Materials

Ensure that materials meet the requirements of the following Specifications:

Material	Section
Structural Steel	851.2.01
Cold-Finish Carbon Shafting	854.2.06
Steel Castings	854.2.07
Paints	870
Steel Bolts, Nuts, and Washers	852.2.01
Anchor Bolts	852.2.02
High Tensile-Strength Bolts, Nuts, and Washers	852.2.03
Shear Connectors	512
Elastomeric Pads	885.2.01
Plain Cotton Duck	881.2.01
Rubber-Impregnated Cotton Duck	881.2.02
Self-Lubricating Bronze Bearing and Expansion Plates Galvanizing and Bushings	857.2.03 ASTM A 153/A 153M

1. **Fasteners.** Use fasteners in their lubricated, as-delivered condition. Use black bolts oily to the touch. With galvanized assemblies, use nuts with a clean, dry lubricant that contrasts with the color of the zinc coating.

2. **Self-Lubricating Bronze Plates.** Use cast-bronze plates of the type shown on the Shop Drawings, unless otherwise shown on the Plans.

501.2.01 Delivery, Storage, and Handling

A. Fasteners

Store fasteners to protect them from dirt and moisture. Take from storage only enough fasteners to install and tighten during a work shift. Return unused fasteners to protective storage at the end of the shift.

B. Structural Steel Members

1. Delivery

   Load, transport, and unload girders without excessive stress or damage.

   The Engineer will observe the delivery of beams or girders and will immediately notify the Contractor of damaged or unsatisfactory material before the material is unloaded or as soon as the damage is discovered.

   If members are improperly handled, the Inspector may withhold or remove the final stamp of approval.

   Use Figure 1, Figure 2, and the following loading specifications and shipping details for truck, rail, or barge transportation.

   a. Use chains and chain binders to secure beams and girders during shipping only if using a protective shield to prevent gouging flanges and if providing adequate bracing to prevent bending the top flanges.

   b. Keep the center of gravity of beams, girders, and heavy haunch sections as low as possible.

   c. Use access roads to safely deliver beams and girders to the site.

C = 0.2L min.
C = 0.3L max.

For short beams or girders supported on a flat bed the min. C may be disregarded.

* If C = over 15 ft use additional restraint here.

** If C = over 40 ft use another restraint here.

0.4C may be increased to 15 ft to cut down or restraint length, or where angle is too flat.

Beam of overhang ends shall be restrained against flapping horizontally and vertically.

Figure 1

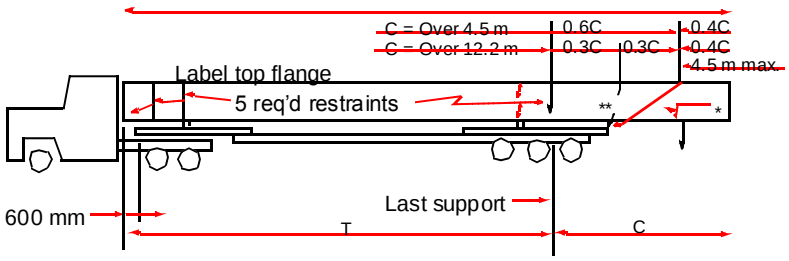

C = 0.2L min.
C = 0.3L max.

For short beams or girders supported on a flat bed the min. C may be disregarded.

* If C = over 4.5 m use additional restraint here.

** If C = over 12.2 m use another restraint here.

0.4C may be increased to 4.5 m to cut-down or restraint length, or where angle is too flat.

Beam of overhang ends shall be restrained against flapping horizontally and vertically.

Figure 1 (metric)

Table of Dimensions—Feet					
1	Min. C & T		Remarks	Max. C & T	
75	15	60		22.5	16.0
80	16	64		24	17.0
85	17	68		25.5	18.1
90	18	72	Max C for 30 in WF →	27	19.2
95	19	76	Max C for 33 in WF →	28.5	20.3
100	20	80	Max C for 36 in WF →	30	21.3
105	21	84		31.5	22.4
110	22	88		33	23.5
115	23	92		34.5	24.5
120	24	96	Preferred Max C for PLG →	36	25.6
125	25	100		37.5	26.7
126	26	100		37.8	88.2
127	27	100		38.1	88.9
128	28	100		38.4	89.6
129	29	100		38.7	90.3
130	30	100		39.0	91.0
131	31	100		39.3	91.7
132	32	100		39.6	92.4
133	33	100		39.9	93.1
134	34	100	Max C for PLG →	40.2	93.8

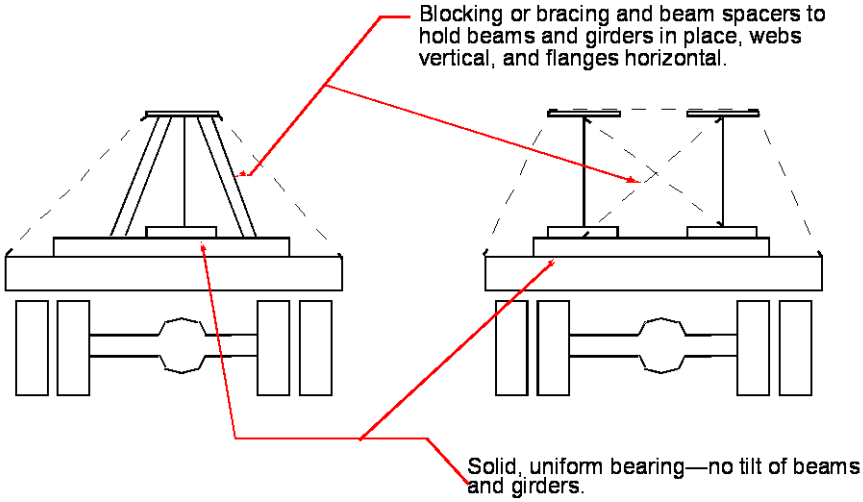

Figure 2

Table of Dimensions—Meters					
1	Min. C & T		Remarks	Max. C & T	
23.0	4.5	18.2		6.9	16.0
24.0	4.9	19.5		7.3	17.0
26.0	5.2	20.7		7.8	18.1
27.0	5.5	21.9	Max C for 760 mm WF →	8.2	19.2
29.0	5.8	23.2	Max C for 838 mm WF →	8.7	20.3
30.0	6.1	24.3	Max C for 914 mm WF →	9.1	21.3
32.0	6.4	25.6		9.6	22.4
34.0	6.7	26.8		10.0	23.5
35.0	7.0	28.0		10.5	24.5
37.0	7.3	29.3	Preferred Max C for PLG →	11.0	25.6
38.0	7.6	30.0		11.4	26.7
38.4	7.9	30.0		11.5	26.9
38.7	8.2	30.0		11.6	27.1
39.0	8.5	30.0		11.7	27.3
39.3	8.8	30.0		11.8	27.5
39.6	9.1	30.0		11.9	27.7
39.9	9.4	30.0		12.0	28.0
40.2	9.7	30.0		12.1	28.2
40.5	10.0	30.0		12.2	28.4
40.8	10.4	30.0	Max C for PLG →	12.3	28.6

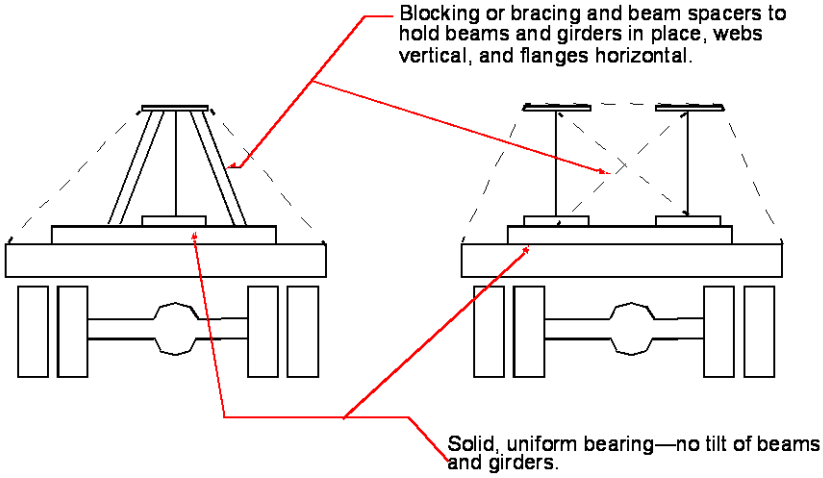

Figure 2 (metric)

2. Storage

Handle structural steel during storage in the same manner as during fabrication. See Subsection 501.2.01.B.2.a, “General” and Subsection 501.2.01.B.3, “Handling.”

a. General

Place beams and girders with their webs vertical. Shore, brace, or clamp beams and girders to resist lateral forces during storage. Keep steel free from dirt, oil, grease, or other contaminants and protect it from corrosion. Pitch trough sections to provide water drainage.

Do not stack beams and girders on each other.

Place long members on supports close together to prevent damage from deflection.

The Engineer will observe the storage and handling of beams or girders and ensure that they are satisfactory before erection.

b. Supports

The material on which the beams and girder supports are placed shall be firm, well-drained, unyielding, and not allow excessive or uneven settlement when the supports are loaded.

Store beams and girders on platforms, skids, or other supports on the ground above high-water elevation.

Shore supports with firm, well-drained unyielding material. Use material that settles evenly when the supports are loaded.

Support beams and girders adjacent to the bearings and at intervals of no more than 25 ft (7.5 m). Use enough intermediate supports to prevent damage from deflection.

3. Handling

Handle steel members with clamps, plate hooks, or devices to avoid nicks, gouges, or depressions. Do not use chains and chokers to handle steel members unless using a protective shield between the chain or choker and the member.

a. Beam and Girder Pick Up

Use spreader bars to lift beams and girders over 50 ft (15 m) in length.

- One-point pick ups are allowed for beams and girders less than 50 ft (15 m) long.
- Use two-point pick ups so the amount of overhang and distance between hooks does not exceed the distances in the following table:

Beam Size	30 in (760 mm) WF	33 in (840 mm) WF	36 in (920 mm) WF	Plate Girders
2-point pick-up distance between hooks linear feet (meters) maximum	74 (22)	80 (24)	85 (26)	100(30)
2-point pick-up overhang linear feet (meters) maximum	25 (7)	28 (8)	30 (9)	35 (10)
WF = Wide Flange				

If using pick-ups that cause long overhangs, attach lines at beam ends to control movement.

b. Beam and Girder Protection

Keep webs of beams and girders vertical while handling. Never drop, throw, or drag beams and girders.

Do not allow beams or girders to bend about the weak axis, even under their own weight. When shipping beams or girders upside-down, use caution when turning them over for shipment and turning them right-side up at their destination. Use enough blocking and pick-up points to prevent excess stress on the girder.

501.3 Construction Requirements

501.3.01 Personnel

A. Fabricators

Employ structural steel fabricators certified under the AISC Certification Program, Category III—Major Steel Bridges.

B. Welders

Qualify field welders according to ANSI/AASHTO/AWS D 1.5. Employ certified welders who possess a current welding certification card issued by the Department's Office of Materials.

501.3.02 Equipment

A. Tension Measuring Device

Have a tension measuring device at all job sites where High Tensile-Strength bolts are installed and tightened. Use the tension-measuring device to:

- Confirm the proper snug tight and final installation bolt tension
- Calibrate wrenches properly
- Ensure the bolting crew understands the importance of proper bolt tensioning

At least once a year, have an approved testing agency calibrate the tension-measuring device to confirm its accuracy.

B. Wrenches

If using the calibrated wrench method to tighten HTS bolts, calibrate the wrench at least once each working day for each diameter, length, and grade of bolt to be installed. Recalibrate the wrench when adding or deleting the air hose, changing compressors, or performing similar tasks.

Use the wrench in job-site tightening under the exact conditions that it was calibrated. Recalibrate wrenches if a significant difference is noted in the surface condition or level of lubrication of the bolt threads, nuts, or washers.

C. Ovens

Use electric drying ovens approved by the Engineer to dry electrodes according to ANSI/AASHTO/ AWS D 1.5.

D. Lifting Equipment

Use proper lifting equipment that can carefully handle steel members without bending, twisting, damaging, or excessively stressing parts. Use cranes that have at least a two-part line for lifting.

The Department will terminate shop inspection if lifting equipment is operated or maintained in a hazardous manner.

E. Erection Equipment

Proposed erection equipment is subject to the Engineer's review. Even with this review, assume responsibility for providing adequate and safe equipment and for carrying out the work according to the Plans and Specifications. Begin erection only after the Engineer's review.

501.3.03 Preparation

A. Installation Method Testing for Bolted Construction

Before beginning the bolting operation, the Engineer will verify the Contractor's installation method. Verification will determine if the method used (calibrated wrench or turn-of-nut) will produce the correct bolt tension in the HTS structural bolts of the completed connection.

If the method is successful, the total clamping force of bolts will be transferred to the connected members and will resist slipping through friction.

Do not use bolts tightened during installation method tests or use other previously used HTS structural bolts in the work.

1. Verification Procedures for Both Methods

   Test both methods of tightening (calibrated wrench or turn-of-nut) with the following procedures:

   a. Select three assemblies (bolt, nut, and washer) from each diameter, length, and grade to be installed.
   b. Install each bolt, nut, and washer into the tension-measuring device.
   c. Install enough spacers or washers so that at least 3 but not more than 5 full threads are between the nut face and the underside of the bolt head.
   d. Use the same type of element (nut or bolt head) as will be used in the work. Place a hardened washer under the turned element.
   e. Snug tighten each assembly using the procedure that will be used in the work.
   f. After snug tightening, place appropriate marks on the end of the bolt stick out and nut, bolt head and tension calibrator, or drive socket and tension calibrator.

2. Calibrated Wrench Method Verification

   a. Impact Wrench

      When using an impact wrench:

      1) Tighten each of the three assemblies beyond snug tight.
      2) Adjust the wrench to cut out at a tension no less than 5 to 10 percent higher than the appropriate tension shown in Table A: Required Fastener Tension.

         Bolts tightened to this cut-out point should consistently develop the required minimum tension. This cut-out point shall be the actual job-site setting.

   b. Manual Torque Wrench

      When using a manual torque wrench:

      1) Tighten each of the three assemblies beyond snug tight.
      2) Note the torque required to induce a bolt tension 5 to 10 percent higher than the appropriate tension shown in Table A: Required Fastener Tension.
      3) Measure torque with the nut in rotation.
      4) Average the three tests to find the minimum torque to use for job-site installation tightening.
      5) If the torque wrench produces erratic results, do not use that wrench.

3. Turn-of-Nut Method Verification

   When using the turn-of-nut method, tighten the three assemblies beyond snug tight to the appropriate rotation shown in Table B: Nut Rotation from Snug Tight. Ensure that at this rotation, the minimum bolt tension is 5 to 10 percent higher than the appropriate tension shown in Table A: Required Fastener Tension.

Table A: Required Fastener Tension

Nominal Bolt Diameter and Thread Pitch	Minimum Tension (1) in kips (kN)	
	ASTM A325 (A 325M)Bolts	ASTM A490 (A 490M) Bolts
1/2	12	15
5/8 (M 16 x 2)	19 (91)	24 (114)

Table A: Required Fastener Tension		
Nominal Bolt Diameter and Thread Pitch	**Minimum Tension (1) in kips (kN)**	
	ASTM A325 (A 325M)Bolts	**ASTM A490 (A 490M) Bolts**
3/4 (M20 x 2.5)	28 (142)	35 (179)
7/8 (M22 x 2.5)	39 (176)	49 (221)
1 (M24 x 3)	51(205)	64 (257)
1-1/8 (M27 x 3)	56 (267)	80 (334)
1-1/4 (M30 x 3.5)	71(326)	102(408)
1-3/8	85	121
1-1/2 (M36 x 4)	103 (475)	148 (495)

(1) Equal to 70 percent of specified minimum tensile strengths of bolts (as specified in ASTM Specifications for tests of full-size A 325 (A 325M) and A 490 (A 490M) bolts with UNC (metric) threads loaded in axial tension) rounded to the nearest kip (kN).

Table B: Nut Rotation(1) from Snug Tight			
Bolt Length (measured from underside of head to end of bolt)	**Both faces normal to bolt axis**	**One face normal, one faced sloped not more than 1:20**	**Both faces sloped not more than 1:20**
4 x bolt diameter or less	1/3 turn	1/2 turn	2/3 turn
Greater than 4 but no more than 8 x bolt diameter	1/2 turn	2/3 turn	5/6 turn
Greater than 8 but no more than 12 x bolt diameter	2/3 turn	5/6 turn	1 turn

(1) Nut rotation is relative to bolt, regardless of the element (nut or bolt) being turned. For bolts installed by 1/2 turn or less, the tolerance of plus 30 degrees, minus 0 degrees applies. For bolts installed by 2/3 turn and more, a tolerance of plus 45 degrees, minus 30 degrees applies.

501.3.04 Fabrication

A. Straightening Material

Ensure that rolled material is straight to the mill tolerances provided in ASTM A 6/A 6M before it is laid off or worked. Use straightening methods that do not injure the metal. Sharp kinks and bends will be cause for rejection the material.

B. Using Stock Material

The fabricator may use stock materials for minor Items whose quantity for the Project is less than the minimum required for mill rolling if the following requirements are met:

1. Mill test reports show that the stock material meets the requirements of the Specifications.
2. The stock material is identifiable by heat number and mill test report so the Inspector can determine if the material meets the required Specification.

Instead of these requirements, the Engineer may take representative stock samples and test them at the Contractor's expense.

C. Identifying Steel

Provide a system of assembly-marking individual pieces and the issuance of cutting instructions to the shop that will maintain identity of the mill test report number.

Before cutting or placing individual pieces of steel in stock for later use, mark the pieces with the following:

- Mill test report number
- Heat number
- Color code, if any

Transfer heat numbers and color codes only in the presence of the Inspector.

Color code steel pieces according to ASTM A 6/A 6M Specification identification. Establish and record an individual color code for steels not included in the A 6/A 6M Specification.

If steel is subject to fabrication that might erase a painted color code mark before assembly, stamp it with a steel die or attach a tag.

D. General Procedures

1. **Marking Steel.** Mark finished beams or girders with the following:
   - Erection mark or match mark according to the erection diagram on the shop drawings.
   - Weight, if a member weighs more than 3 tons (3 Mg).
2. **Edge Planing.** Plane sheared edges of plates more than 5/8 in (16 mm) thick to a depth of 1/4 in (6 mm).
3. **Re-Entrant Cuts.** Fillet re-entrant cuts, notch free, to a radius of at least 3/4 in (19 mm).
4. **Oxygen Cutting.** Steel may be oxygen-cut if the following is obtained:
   - Smooth surface free of notches and cracks
   - Accurate profile using a mechanical guide

   Ensure that oxygen cutting conforms with AWS D 1.5. Oxygen-cut by hand only where approved.

   After cutting, round the corners of oxygen-cut surfaces to a 1/16 in (2 mm) radius by grinding.
5. **Cambering.** The camber shown on the Plans is that required after completely fabricating the member, including attaching cover plates and shear connectors. Do not use cambering methods that will induce stresses that may impair the service life of the member.
   a. Obtain camber for plate girders by cutting both edges of the web after the shop web splices are complete and have been inspected.
   b. Apply heat no hotter than 1,150 °F (620 °C) to adjust deviations from the camber ordinates (shown on the Shop Drawings) caused by web distortion from either of the following:
      - Oxygen cutting
      - Weld metal shrinkage
   c. Obtain camber for rolled beams with approved heat-cambering methods.
6. **Finishing Bearing Surfaces**

   Ensure that the surface finish of bearings, base plates, and other bearing surfaces in contact with each other or with concrete meets the ANSI surface roughness requirements, defined in ANSI B 46.1 Part 1, as follows:

Surface	Finish Requirement
Steel slabs	ANSI 2,000 (50 µm)
Heavy plates in contact in shoes to be welded	ANSI 1,000 (25 µm)
Milled ends of compression members and milled or ground ends of stiffeners and fillers	ANSI 500 (12.5 µm)
Bridge rollers and rockers	ANSI 250 (6.3 µm)
Pins and pin holes	ANSI 125 (3.2 µm)
Sliding bearings	ANSI 125 (125 µm)

Finish surfaces that contact metal or masonry as specified below.

a. **Sole and Bearing Plates.** Ensure that sole and bearing plates have full contact when assembled. Straighten warped or deformed plates before machining; then do one of the following to the surfaces of plates contacting masonry:

   1) Machine the surfaces to an ANSI 2,000 (50 µm) surface roughness rating value.

   2) Straighten the surfaces so that the maximum clearance under a straightedge placed across the bearing surface in any direction is 1/16 in. (2 mm)

b. **Cast Pedestals and Shoes.** Machine the surfaces of cast pedestals and shoes that contact metal surfaces.

c. **Bearing Assemblies.** Finish fabricated bearing assemblies according to Subsection 501.3.04.D.6, "Finish Bearing Surfaces."

   Perform final machining after the assembly is completely fabricated. If the completed assembly must be heat-treated, perform final machining after the heat treatment.

d. **Plates in Contact with Elastomeric Pads.** Ensure that the plates are straight and free of loose mill scale. Do not machine-finish the surface in contact with the elastomeric pad.

e. **Direction of Cut.** Machine the faces of movable surfaces and their opposing contact surfaces so that the finish cut is in the direction of the expected movement, unless using non directional finishing equipment.

f. **Abutting Joints**. In compression members (and tension members when specified on the Plans), face the abutting joints and bring them to even bearings. When facing joints is not required, ensure an opening of 1/4 in (6 mm) or less.

7. **Annealing and Stress Relieving**

After heat treatment, machine-finish, bore, and straighten the structural members required by the Plans to be annealed or normalized. Perform full annealing and normalizing according to ASTM A 919 and the following:

a. During heating and cooling, keep the furnace temperature uniform so the temperature difference between any two points on a member does not exceed 100 °F (40 °C).

b. Record each furnace charge to identify the pieces in the charge and show the temperatures and schedule used.

   The method of recording the treatment operation procedures is subject to the Inspector's approval.

c. Provide proper instruments, including recording pyrometers, to determine member temperatures in the furnace.

d. When the Contract requires, stress-relieve welded bridge shoes, pedestals, and other similar weldments according to AWS Specifications.

8. **Component Fabrication**

a. Beam and Girder Ends

   Fabricate the ends of beams and girders to be vertical in the final erected position, unless otherwise shown on the Plans.

b. End Connection Angles

Build end connection angles to the exact length shown on the Plans, measured between the heels of the connection angles. The allowed tolerance is plus 0 to minus 1/16 in (plus 0 to minus 2 mm).

Where continuity is required, face end connections. Ensure that the connection angle thickness after facing is no less than 3/8 in (10 mm) or the amount shown on the Plans.

c. Steel Joints

At the shop, shape the plates, angles, or other structural shapes to conform to the section of the concrete deck. Ensure that painting and other fabrication requirements conform to the Specifications for these Items.

d. Bent Plates

Ensure that unwelded, cold-bent, load-carrying, rolled steel plates meet the following requirements:

1) The bend lines are at right angles to the rolling direction.

2) The plate will not crack during bending.

Minimum bend radii, measured to the concave face of the metal, for all grades of steel used in this specification, are shown in the following table:

Thickness "T" in Inches (Millimeters)	Minimum Bend Radii
Up to ½ (12)	2 T
Over 1/2 to 1 (12 to 25)	2-1/2 T
Over 1 to 1-1/2 (25 to 38)	3 T
Over 1-1/2 to 2-1/2 (38 to 60)	3-1/2 T
Over 2-1/2 to 4 (60 to 100)	4 T

- Low-alloy steel in thicknesses over 1/2 in (12 mm) may require hot bending for small radii. If a shorter radius is essential, bend plates hot at 1,200 °F (650 °C) or less. Ensure that hot-bent plates have bend lines at right angles to the rolling direction.

3) Round the corners of plates to a radius of 1/16 in (2 mm) before bending.

e. Stiffeners

Ensure that bearing stiffeners and stiffeners used as supports for concentrated loads have full bearing on the flanges they transmit load to or the flanges they receive load from. Mill or grind the bearing surfaces of stiffeners.

On weldable steel in flange compression areas, the Contractor may weld stiffeners as shown on the Plans.

Ensure that stiffeners not located at points of concentrated loads fit tightly enough to keep water out after painting, unless otherwise shown.

f. Pins

Turn pins accurately to the dimensions shown on the Shop Drawings. Ensure that pins are straight, smooth, and flawless. The pins may be forged and annealed or of cold-finished, carbon steel shafting.

Furnish two pilot nuts and two driving nuts for each size of pin, unless otherwise specified.

g. Pin Holes

Bore pin holes in members so they are:

- True to the specified diameter
- Smooth
- Straight
- At right angles to the axis of the members
- Parallel with each other, unless otherwise required

Produce the final surface with a finishing cut. Bore holes in built-up members after completing bolting or welding.

Ensure that pin hole diameters meet the following requirements:

Pin Diameter	Pin Hole Diameter
5 in (125 mm) or less	Must not exceed pin diameter by more than 1/50 in (0.50 mm)
Larger than 5 in (125 mm)	Must not exceed pin diameter by more than 1/32 in (0.75 mm)

h. Threads

For structural steel construction, use threads for bolts and pins that conform to the Unified Screw Threads ANSI B1.13 (Metric Screw Threads, ANSI B 1.13M), Class 2A for external threads, and Class 2B for internal threads except pin ends with a diameter of 1 3/8 in (35 mm).

i. Unfinished and Turned Bolts

1) Bolts

Do not use ribbed bolts. Use unfinished bolts or turned bolts that conform to ASTM F 568M Class 4.6. Use bolts with single self-locking nuts or double nuts unless otherwise shown.

Use turned bolts with an ANSI surface roughness rating of 125 (3.2 µm).

2) Washers

Use beveled washers when bearing faces have a slope of more than 1 to 20 with respect to a plane normal to the bolt axis.

3) Heads and Nuts

Use hexagonal heads and nuts with standard dimensions for bolts of nominal size specified or of the next larger size. Provide a washer under the nut.

Use threads with a diameter equal to the body or nominal diameter of the bolt specified. For turned bolts, threads shall be entirely outside of the holes.

j. Anchor Bolts

Use anchor bolts of the size and shape specified on the Plans.

9. **Coating Machine-Finished Steel Surfaces**

Coat the following with rust-inhibiting grease or with other approved corrosion-preventive compounds:

- Opposing surfaces of sliding bearings
- Mating convex and concave surfaces of curved plates and rocker bearing assemblies
- Sliding surfaces opposite self-lubricating bronze surfaces
- Pins and pinholes

Coat other machined surfaces with one coat of the shop primer specified on the Plans. Include convex faces of rockers and sole plates at fixed bearings of spans that have line bearings on steel plates.

10. **Shop Painting**

Perform shop painting according to Section 535, especially Subsection 535.3.05.C, “Paint New Steel Structures,” step 5.

E. Bolt Holes

Produce bolt holes as follows:

1. Full-Size Punched Holes

The Contractor may use full-size punched holes if these conditions exist:

- A member is composed of 5 or less separate thicknesses of metal, and

- The metal thickness of any one part is 3/4 in (19 mm) or less for structural steel, or 5/ 8 in (16 mm) or less for high-strength steel.

Poor hole matching will be cause for rejection. Punch holes as follows:

a. Punch holes 1/16 in (2 mm) larger than the nominal diameter of the bolts.

b. Do not punch full-sized holes on field connections of main members.

c. Ensure that the die diameter for punched or subpunched holes does not exceed the punch diameter by more than 1/16 in (2 mm).

d. Cut holes clean to avoid torn, ragged edges.

e. Enlarge holes by reaming.

2. Subpunched and Subdrilled Holes

Subdrill holes 3/16 in (5 mm) smaller than the nominal diameter of the bolts.

After assembly, ream the holes if any one of the conditions exists:

- A member is composed of more than 5 separate thicknesses of metal.
- The metal thickness of any one main part is greater than 3/4 in (20 mm) for structural steel or 5/8 in (16 mm) for high-strength steel.
- When required according to Subsection 501.3.05.E.1, “Normal Assembly,” step b.

Instead of subpunching and subdrilling, the Contractor may drill holes from the solid after assembly. However, whether drilling from the solid or subdrilling and subpunching, ensure the following:

a. Holes are no more than 1/16 in (2 mm) larger than the nominal diameter of the bolts.

b. Holes for turned bolts are subpunched or subdrilled.

c. Holes are carefully reamed after assembly to provide a light-driving fit with the bolt.

3. Accuracy of Punched, Subpunched, and Subdrilled Holes

Accurately full-size punch, subpunch, or subdrill holes so that after assembly but before reaming, holes meet the following requirements:

- A cylindrical pin 1/8 in (3 mm) smaller than the nominal diameter of the punched hole can enter perpendicular to the face of the member in at least 75 percent of the adjacent holes in the same plane without drifting.
- A pin 3/16 in (5 mm) smaller than the nominal diameter of the hole can pass through the hole.

If either of these requirements is not met, the faulty pieces will be rejected.

4. Reamed and Drilled Holes

Ensure that reamed and full-sized drilled holes are cylindrical, perpendicular to the member, and 1/16 in (2 mm) larger than the nominal diameter of the bolts. Ream and drill holes as follows:

a. Direct reamers using mechanical means when practical.

b. Ream and drill with twist drills.

c. Remove burrs on outside surfaces. Disassemble parts, if required, to remove burrs caused by drilling or reaming.

d. For connecting parts that require reamed or drilled holes, do the following:

1) Assemble the connecting parts.

2) Hold them securely while reaming or drilling.

3) Match-mark them before disassembling.

5. Accuracy of Reamed and Drilled Holes

After drilling and reaming holes, ensure that at least 85 percent of the holes in any group have no offset greater than 1/32 in (0.75 mm) between adjacent thicknesses of metal. Make sure the remaining holes are not elongated or show an offset greater than 1/16 in (2 mm) between the adjacent thicknesses of metal.

6. Fitting Up

   Before reaming, drilling, or bolting, ensure that the pieces forming built-up members are:

   - Straight
   - Close-fitting
   - Clean
   - True to the required dimensions
   - Free from twists, bends, open joints, burrs, and other defects resulting from faulty fabrication or workmanship
   - Well-pinned
   - Firmly drawn together

   Before shop bolting material with full-size punched holes:

   a. Ensure that holes are no more than 1/16 in (2 mm) larger than the nominal diameter of the bolt.

      Holes may be spear-reamed if necessary to clear and clean them for entering bolts.

   b. Carefully adjust end connection angles and similar parts to the correct position and firmly hold them in place until bolted.

   c. Fit up connections securely before placing bolts.

   d. Ream or drill unfair holes (holes that prevent the bolt from entering).

F. High Tensile-Strength Bolt Connections

This section covers the shop and field connections of structural joints using High Tensile-Strength bolts tightened to a specified tension. Use HTS structural bolts that meet the requirements of Subsection 852.2.03, "High Tensile-Strength Bolts." Furnish the bolts, nuts, and washers according to Subsection 852.2.03.

To seat parts solidly, keep joint surfaces (including those adjacent to the bolt heads, nut, or washers) free of scale (except tight mill scale), dirt, burrs, metal spatters, and other defects. Ensure that joint contact surfaces are free of oil, grease, paint, lacquer, galvanizing, rust, and other matter. Refer to the requirements of Subsection 535.3.05.C, "Paint New Steel Structures" step 5.

Install fasteners with a hardened washer under the nut or bolt head, whichever is the element turned in tightening.

- When the slope of the bolted-part surfaces contacting the bolt head and nut do not exceed 1:20 (with respect to a plane normal to the bolt axis), use a flat washer.
- When the slope of an outer face of the bolted parts exceeds 1:20, use a smooth, beveled washer.
- If necessary, clip washers on one side to a point no closer than 85 percent of the bolt diameter from the center of the washer.

When a joint assembly is complete, ensure that each bolt has a tension 5 to 10 percent above the required minimum value shown in Table A: Required Fastener Tension.

G. High Tensile-Strength Bolt Tightening Methods

Tighten HTS bolts with either the Calibrated Wrench Method or the Turn-of-Nut Method. For both methods, conduct the final rotation of the nut or bolt (whichever is the turned element) from a snug-tight condition according to Table B: Nut Rotation from Snug Tight.

Snug tight is the tightness achieved when the plies of the joint are in firm contact. Obtain this with a few impacts of an impact wrench or with full effort using an ordinary spud wrench. Ensure that the snug tightening procedure produces 10 to 30 percent of the required fastener tension shown in Table A: Required Fastener Tension.

1. Calibrated Wrench Method

   Install bolts in the connection holes with a hardened washer under the turned element and bring the bolts up to snug tight (described above) as follows:

a. Snug tighten systematically from the most rigid part of the connection to the free edges as follows:
   1) Start the tightening pattern at the center of the pattern near the end of each member being spliced.
   2) Work toward the edges of the splice plate.
b. After the initial snug tightening, systematically tighten the bolts again as necessary using a similar tightening pattern until all bolts are simultaneously snug tight and the connection is fully compacted.
c. Following snug tightening, tighten the bolts in the connection using a calibrated wrench (either air impact or manual torque). Systematically tighten from the most rigid part of the joint to its free edges.
d. After the first pass, systematically tighten the bolts again to ensure that bolts that may have relaxed from tightening adjacent bolts are tightened to the prescribed amount.
e. Operate impact wrenches until the wrench cuts out at the setting established by calibration.

   If using a manual torque wrench, measure the target torque with the turned element in motion.
f. During installation in the assembled steel work, verify that the wrench adjustment selected by the calibration does not rotate the nut or bolt head from snug tight more or less than that permitted in Table B: Nut Rotation from Snug Tight.

2. Turn-of-Nut Method

   When bolts are too short to fit in the tension calibrating device, use the Turn-of-Nut Method in the actual work.

   Install bolt connection holes with a hardened washer under the turned element and bring the bolts up to snug tight (described above) as follows:
   a. Snug tighten the bolts using steps a and b of the Calibrated Wrench Method.
   b. Following snug tightening, tighten the bolts in the connection by the applicable amount of rotation specified in Table B: Nut Rotation from Snug Tight.
   c. During the tightening operation, do not rotate the part not turned by the wrench.
   d. Tighten systematically from the most rigid part of the joint to its free edges as follows
      1) Start the tightening pattern at the center of the pattern near the end of each member being spliced.
      2) Work toward the edges of the splice plate.

H. Welded Construction

Ensure that welded construction conforms to the requirements below. Electroslag or electragas welding is prohibited.

1. **Insufficient Welds.** Repair, remove, or replace welds that do not meet the requirements of the Specifications using methods permitted by 3.7 of ANSI/AASHTO/AWS D 1.5 Specifications. If the weld is unacceptable, the Engineer will reject the entire piece.

   After welding repairs are made, the Engineer will have the repaired areas retested to determine if the repairs meet Specification requirements.
2. **Unauthorized Welds.** Obtain the Engineer's approval before making temporary or permanent welds not shown on the Plans or permitted by the Specifications.

I. Alterations to AASHTO Paragraphs

Ensure that welded construction conforms to the American Welding Society (AWS) "Bridge Welding Code" ANSI/AASHTO/AWS D 1.5 (including revisions) except as modified by these Specifications and AASHTO. Exceptions to the ANSI/AASHTO/AWS specifications are noted below.

1. **Paragraph 3.5.2.** Instead of Paragraph 3.5.2, apply the following requirements:
   a. Before cutting ends to length, shop assemble ends of members to be field connected by welding in the laydown position (placed to grade from bearing to bearing).

b. To align field splices vertically, match-cut adjoining ends while in the laydown position and matchmark the ends at the center point of the web section.

c. Check rolled shapes with ends to be field welded before beginning fabrication in order to take into consideration allowed mill tolerances on web-center-line-to-flange measurements. Pair shapes to provide the best possible alignment.

2. **Paragraph 3.10.1.** Instead of Paragraph 3.10.1, apply the following requirements:

a. Remove slag from welds immediately after completing each weld. Do not further clean or paint welds to be encased in concrete.

b. For welds connecting swaybracing members to steel piling that are to be painted according to Subsection 535.3.05.E, "Paint Steel H-Piling, Metal Shell Piling, and Steel Swaybracing" and Subsection 535.3.05.F, "Apply Special Protective Coatings to Steel Piling, Steel Swaybracing, and Concrete Piling," remove the slag and do not clean any further.

c. Clean and paint other welds as specified below.

d. After removing slag and after completing visual, ultrasonic, or magnetic particle inspection, either blast-clean or scrub welds with water and a stiff brush. Ensure that weld areas are clean and free of spatter, rust, loose scale, oil, and dirt.

e. Prime welds on the same day they are cleaned, using the prime coat specified on the Plans or in the Special Provisions. When using water to clean, ensure that the surface is dry before painting. Clean and prime welds as soon as practical after the weld is accepted and before the weld area rusts.

3. **Paragraph 4.30.1.** Instead of Paragraph 4.30.1, apply the following requirements:

After welding studs to beams, visually inspect the studs and give a random number of them a light blow with a hammer. Strike the following with a hammer and bend them 15 degrees from the correct installation axis:

- Studs that do not show a full 360-degree weld fillet.
- Studs that do not ring when given a light blow with a hammer.
- Studs that have been repaired by welding.

In case of a defective or repaired weld, bend the stud 15 degrees in the direction that places the defective portion of the weld in the greatest tension.

Replace studs that crack (either in the weld, base metal, or the shank) during inspection or subsequent straightening. See paragraph 4.30.4.

On studs that must be replaced, the Contractor may manually weld the stud with the following fillet welds:

Stud Size	Fillet Weld
3/4 in (19 mm)	Full 360 degrees–1/4 in (6 mm)
7/8 in (22 mm)	Full 360 degrees–5/16 in (8 mm)
1 in (25 mm)	Full 360 degrees–5/16 in (8 mm)

501.3.05 Construction

A. Straightening Material

The Engineer may permit straightening of plates, angles, other shapes, and built-up members if the straightening is minor and can be accomplished in the field. Use only methods that do not injure the metal.

1. **Heat Straightening.** When the Engineer allows it, heat-straighten metal as follows:

a. Ensure that parts to be heat-straightened are free of stress and external forces. The exception is stresses from the mechanical means used to apply the heat.

b. Carefully apply a limited amount of localized heat under supervision:

1) Heat the area to no more than 1150 °F (620 °C) as measured by temperature-indicating crayons, liquids, or bimetal thermometers.
2) Cool the metal slowly after heating.

   After the metal cools naturally to 600 °F (315 °C), the Contractor may use air-mist spray cooling.

c. After straightening a bend or knuckle, have the Engineer carefully inspect the metal surface for evidence of fracture and for general acceptability.

B. Erection

Proposed erection methods are subject to the Engineer's review. Even with this review, assume responsibility for providing adequate and safe methods and for carrying out the work according to the Plans and Specifications. Begin erection only after the Engineer's review.

1. Assemble Parts in the Field

   Before assembly, clean surfaces that will permanently contact each other.

   Assemble parts accurately, following the match marks, according to the Plans and the erection diagram shown in the Shop Drawings.

   Do not hammer if it will injure or distort the members.

   Ensure that fitting-up and drifting done during field assembly and connection meet the requirements of Subsection 501.3.04.E.6, "Fitting Up."

2. Erect Beam and Girder

   Before making field connections (bolting or welding) on continuous beams or girders, adjust splice joints to the correct elevations and slopes and properly align the beams.

   The Contractor may make beam and girder splices on the ground if using the proper blocking to give adjoining sections the correct relative slopes.

3. Place Anchor Bolts and Adjust Nuts

   Unless otherwise shown on the Plans, provide formed holes for anchor bolts. Set the bolts using an approved nonshrinking mortar. Place anchor bolts as follows:

   a. After erecting structural steel, drop the bolt into the dry hole to ensure that it fits properly.
   b. Remove the bolt and fill the hole approximately two-thirds full with an approved nonshrinking mortar the consistency of thick paint.
   c. With even pressure or light hammer blows, force the bolt down until:
      1) Mortar rises to the top of the hole.
      2) The anchor bolt nut and washer rest firmly against the metal flange, plate, shoe, or pedestal.
      3) The bolt has the correct projection above the top of the concrete bearing area.
   d. Remove excess mortar flushed from the hole down to the concrete bearing area.
   e. Clean holes or slots and metal surfaces in order to field paint surfaces properly and to allow moving parts to expand and contract without restraint.
   f. Tighten nuts on anchor bolts that pass through beam and girder flanges or through sole plates attached to flanges as follows:
      1) At both fixed and expansion ends, tighten nuts and bolts to bear on the washer and then back off one full turn.
      2) Draw nuts on other anchor bolts down to a tight fit.
      3) Do not burr anchor bolt threads.

g. Adjust the horizontal locations of the anchor bolts relative to the midpoint of slotted holes in bottom beam flanges according to the ambient temperature at bolt placement. This allows the beam and its attached bearing components to expand or contract in the future.

h. Do not grout anchor bolts within a complete unit until beam splicing within the unit is complete.

4. Erect Steel Joints

Erect steel joints so that the surface in the finish grade plane (laterally and longitudinally) is true and free of warping.

Keep joints from moving out of their correct position during concrete placement.

Cut loose temporary connections as soon as possible to avoid restraining expansion and contraction.

Note that openings shown on the Plans are based on an erection temperature of 60 °F (15 °C). Make corrections in the opening size for the actual erection temperature, and maintain the required opening.

5. Connect Pins

Furnish pilot and driving nuts at no additional cost to the Department. Drive pins so that members take full bearing. Provide pin nuts and run them up tight. Burr the threads at the face of the nut.

6. Misfits

Correct misfits by reaming, cutting, and chipping during erection.

Immediately report to the Engineer errors that occur in shop fabrication or deformations from handling and transportation that prevent assembling and fitting up parts properly. The Engineer must approve the correction method.

Assume responsibility for misfits, errors in fabrication, and damage. Make corrections or replace parts at no additional cost to the Department.

C. Finishing Bearing Areas

1. Steel on Concrete

Unless otherwise required, level and finish bearing areas with a Type IV—Floated Surface Finish according to Subsection 500.3.05.AB.5, “Type IV—Floated Surface Finish.”

a. Finish so that steel joint members, shoes, and bearing plates have full and uniform bearing.

b. Correct improperly finished areas by approved means.

c. Ensure that shoes and plates are on the correct alignment and elevation.

d. Unless otherwise provided, place shoes and plates on layers of canvas (cotton duck) and red primer that conforms with Subsection 870.2.01.A.1, “No. 1A, Red Primer” as follows:

1) Coat the bearing area surface with red primer.

2) Place three layers of at least 8 oz (227 g) duck and coat each layer’s top surface with red primer.

3) Position shoes or plates on the top layer of duck while red primer is still plastic.

4) Instead of red primer—saturated duck, the Contractor may substitute thin pads of an approved type and thickness.

2. Steel on Steel

Prepare bearing areas as follows:

a. Ensure that sole and bearing plates, rockers, and shoes that are designed to bear on one another fit with full bearing.

b. Keep contact areas free of dirt, grit, and other foreign matter.

c. Prepare machined surfaces that have been shop-coated according to Subsection 501.3.04.D.9, “Coating Machine-Finished Steel Surfaces” and that will be exposed after erection as follows:

1) Remove the shop coating.

2) Replace the coating with the same paint system used on structural steel components.

3. Steel on Self-Lubricating Bronze Plates

   Prepare machined surfaces that have been shop-coated according to Subsection 501.3.04.D.9, "Coating Machine-Finished Steel Surfaces" and that will be in contact with self-lubricating bronze plates or bushings as follows:

   a. Remove the shop coating.

   b. Coat the surface with stick lubricant or liquid furnished by the manufacturer of the self-lubricating bronze material.

4. Steel on Elastomeric Pads

   Place elastomeric pads on concrete bearing areas that have the Type IV—Floated Surface Finish specified in Subsection 500.3.05.AB.5, "Type IV—Floated Surface Finish," unless otherwise required.

   Ensure that plates that will contact elastomeric pads meet the "no paint" requirements of Subsection 535.3.05.C.5.e, "Plates That Touch Elastomeric Pads."

D. Field Painting

Field paint according to Section 535 using the paint system required by the Plans or Special Provisions. See also Subsections 501.3.05.C.2, "Steel on Steel," and 501.3.05.C.4, "Steel on Elastomeric Pads."

E. Assembly

Allow only enough drifting during assembly or field connections to bring the parts into position. Ensure that drifting does not enlarge or distort holes.

Follow these requirements when shop assembling components.

1. Normal Assembly

   Do normal shop assembly as follows:

   a. Unless otherwise specified, and before reaming, assemble each individual, full-length continuous beam, tower face, bent, rigid frame, or plate girder in the shop.

   b. Subpunch or subdrill and ream bolt holes in field connections and splices according to Subsection 501.3.04.E.1, "Full-Size Punched Holes," and Subsection 501.3.04.E.2, "Subpunched and Subdrilled Holes," while assembled in the shop.

   c. Obtain approval of the assembly, including the camber, alignment, accuracy of holes, and faced joints.

   d. On holes for the field connections of the ends of floor beams and stringers, do one of the following while members are assembled:

      - Subpunch and ream the holes
      - Ream to a steel template

2. Complete Assembly

   When the Contract requires, make the complete shop assembly of an entire structure or a portion of it, including the floor system.

3. Partial Assembly

   When authorized by the Engineer or Inspector, modify the shop assembly requirements above to permit partial shop assembly as follows:

   a. For plate girders, continuous beams, rigid frames, and columns of bents and towers, assemble at least three abutting sections.

   b. When the Plans require that the ends of compression members be faced, assemble these members with faced ends in full bearing.

4. Reaming and Drilling Through Templates

   Ream and drill through templates as follows:

   a. Use steel templates with hardened steel bushings in holes accurately dimensioned from the center lines of the connection (inscribed on the template) and from the finished end of the template.

   b. Use center lines to accurately locate the template from the milled or scribed ends of members.

   c. Use exact duplicate templates to ream matching members or the opposite faces of any one member.

   d. Accurately locate templates for connections on like members so that like members are duplicates and require no match-marking.

   e. Full-size ream or drill field connections through templates after locating the templates by position and angle and bolting the templates firmly in place.

   f. When using templates to ream field connections of web members of a bent, tower, or girder, do the following:

      1) Face or scribe at least one end of each web member normal to the long axis of the member.

      2) Accurately set the templates at both ends from the faced or scribed end.

5. Match-Marking

   According to the erection diagram, match-mark connecting parts assembled in the shop to ream holes in field connections.

501.3.06 Quality Acceptance

A. Testing and Inspection

1. Heat Number Testing

   The Department will sample and test each heat number that structural steel is furnished from to fabricate main members.

   To facilitate this testing, ship one piece from each heat of main member structural steel to the fabrication site. Provide pieces long enough to take a properly oriented, representative, 4 x 12 in (100 x 300 mm) sample. This may require that the extra length pieces be 4 or 12 in (100 or 300 mm) longer, depending on testing orientation requirements.

2. Fastener Assembly Testing

   Upon receiving HTS fastener assemblies (bolts, nuts, and washers), notify the Inspection Services Branch of the Office of Materials. The branch will verify that the Contractor has the documentation required by Subsection 852.2.03, “High Tensile-Strength Bolts” and sample the assemblies as necessary.

3. Bolted Construction Inspection

   The Inspector will check the following before or during the bolting operation. Provide the Inspector easy access to the areas of the member to be inspected.

   The Inspector will:

   a. Verify that bolt tension calibrators have been calibrated within the last year. Ensure that the manual torque wrenches have been calibrated at least daily for each diameter, length, and grade as shown in this Specification.

   b. Ensure that bolts are routinely installed to the proper tensions. After inspection, no further evidence of proper bolt tension is necessary.

      If installation tension verification is necessary subsequent to installation and tightening of bolts, notify the Inspection Services of the Office of Materials.

   c. Monitor the surface condition and storage of bolts, nuts, and washers. See Subsection 501.2.01.A, “Fasteners,” for storage requirements.

   d. Ensure that each bolting crew member understands the procedure for snug-tightening the joint and can demonstrate this knowledge by tightening a fastener in a bolt-tension calibrator.

e. Witness the installation method verification procedure and ensure that the same conditions exist during the job-site tightening.

f. Witness fastener installation to ensure proper tightening. This monitoring will verify that plies of connected material are drawn together and that the procedure for snug tightening is followed.

g. Witness the final tightening procedure and mark at least two bolts in each connection to verify that further tightening (from the snug tight position) produces the rotation specified in Table B: Nut Rotation from Snug Tight.

4. Material Application and Traceability Verification

In addition to the requirements specified in Subsection 501.3.04.C, "Identifying Steel," the fabricator shall demonstrate by written procedures and by actual practice a material application and traceability method for the main stress-carrying elements of a shipping piece. The method must be visible at least through the fit-up operation.

The traceability method shall verify proper material application as it relates to the following:

- Material specification designation
- Heat number
- Material test reports for special requirements

5. Mill and Shop Inspection

Give two weeks' notice to the Department's State Materials Engineer (the Materials Engineer) before beginning mill or shop work so that inspection arrangements can be made. Inspection at the mill or shop is intended to facilitate work and avoid errors and does not relieve the Contractor of the responsibility for imperfect material or work quality.

Do not roll or fabricate material until:

- You inform the Materials Engineer where the orders have been placed.
- The inspection is arranged or waived.

Furnish the facilities necessary for the inspection of materials and work quality in the mill and shop. Allow Inspectors free access to the necessary mill and shop locations, and cooperate with the Inspector during inspection.

Shop inspection is required for steel and other metal materials being fabricated.

Inspectors will do the following:

a. Determine if steel members, member components, or other fabricated steel components meet the Plans and Specifications.

b. Identify the steel by color code and correlate its heat numbers obtained from certified mill test reports

NOTE: Do not cut steel or apply prime paint until the Inspector completes this step.

c. Check fabrication, especially the grade of steel, dimensions, welding, and bolting

d. Perform necessary non-destructive testing to determine conformance with the Specifications and Plans.

e. Reject materials or work that does not meet the Specifications.

NOTE: Even if the Inspector accepts materials or members, they can be rejected later if found defective. Promptly replace or repair rejected material or members at no additional cost to the Department.

B. Quality of Work and Finish

Provide quality work and finish on shop work. Ensure that shearing, flame cutting, and chipping are neat and accurate. Neatly finish all parts of the work.

C. Welded Construction

1. Inspection

   An Inspector will be assigned to the fabrication shop for as much time as the State Materials Engineer deems necessary. The State's Inspector or authorized representative will inspect fabrication phases that include, but are not limited to, the following:

   - Certification and transfer of heat numbers and grade steel
   - Dimensions and assembly
   - Inspection and testing of shop welds
   - Non-destructive testing
   - Painting
   - Random sampling
   - Stamp of shop inspection

2. Quality Control

   Assume the following quality control responsibilities for non-fracture critical and fracture critical members and their components:

   a. Perform 100-percent nondestructive radiographic or ultrasonic testing of full penetration welds before offering the welds to the State for quality assurance inspection.

   b. Perform magnetic particle testing of fillet welds according to ANSI/AASHTO/AWS D 1.5.

3. Qualification

   Qualify shop weld procedures and welders according to ANSI/AASHTO/AWS D 1.5. The Engineer may accept tests conducted by other states as evidence of qualification. In the absence of approved shop weld procedures, welding operator and welder qualifications, qualify with the State Materials Engineer as follows:

   a. In the presence of the Engineer's representative, prepare test plates according to ANSI/AASHTO/AWS D 1.5.

   b. Requalify according to ANSI/AASHTO/AWS D 1.5 or whenever the Engineer requires. A new welding procedure qualification is not needed at the start of each new Project.

4. Testing

   Furnish labor and equipment to do the following:

   - Position welds for magnetic particle testing
   - Help transport ultrasonic equipment
   - Provide the Inspector easy access to testing areas

   The Inspector's access to work in the shop and field is top priority.

   The Department of Transportation, in its routine quality assurance inspection, will ultrasonic or magnetic-particle test approximately 25 percent of the welds.

   If testing indicates faulty work, the Inspector will immediately notify the Contractor of the necessary corrective work. Ensure that welders are available to repair faulty work as soon as practical.

   a. **Non-destructive Testing.** If weld cracking occurs, non-destructive testing for Final Acceptance of fillet and groove welds may be delayed to:

      - Within 24 hours after welding has been completed for material 2 in (50 mm) or less
      - Within 48 hours after welding has been completed for material over 2 in (50 mm).

      The fabricator may use, at its expense, nondestructive testing methods other than those specified to examine weld passes or completed welds. Refer to ANSI/AASHTO/AWS D 1.5.

   b. **Ultrasonic Testing.** Unless otherwise specified on the Plans or in Special Provisions, test butt welds in main members by the ultrasonic method.

In addition to the testing requirements of the Plans, Specification, and Special Provisions, the Engineer may require ultrasonic testing if the quality of the work warrants it.

5. Walkways for Field Testing

   When field testing, provide a continuous walkway between the center-most line of stringers from one of the approach fills to the farthest row of splices as follows:

   a. Provide crosswalks connecting with the center line walkway at each butt-welded splice or bolted connection on each row of stringers.
   b. Rest working platforms on the top side of the bottom flange with supporting braces fitting flush against the web.
   c. Provide at least 18 in (450 mm) of clearance on each side of the welded splice or bolted connection. Ensure that the top of the working platform is no more than 3 in (75 mm) above the top side of the bottom flange.
   d. Construct walkways and working platforms of sound materials. If constructing with wood, use wood free of excessive knots or knots that could cause an unsafe condition.
   e. Construct walkways at least 20 in (500 mm) wide and long enough to permit each end to rest on a fixed part or member of the bridge.
   f. Ensure that walkways have a vertical support at least every 10 ft (3 m).
   g. Construct working platforms at least 36 in (900 mm) wide and long enough to permit each end to rest on a fixed part or member of the bridge.
   h. When a deck already exists from the end bent out to the splices, do not construct a separate walkway unless the deck reinforcement steel has been put in place.
   i. Do not allow deck forms to be placed within 18 in (450 mm) of splices until the welds or bolted connections have been inspected and accepted.

6. Tolerances

   For built-up members, the requirements of paragraph 3.5.1.7 of ANSI/AASHTO/AWS D 1.5, as modified, apply except at ends to be field connected by welding. The combined warpage and tilt tolerances shall be one-half that specified.

   For rolled shapes, apply mill practice tolerances (ASTM A 6/A 6M) except at ends to be field connected by welding. The combined warpage and tilt tolerances shall be one-half that specified.

   Use the above tolerances unless there are deviations that are additive when measured at the toe. In this case, ensure that the maximum offset between adjoining flanges does not exceed 1/4 in (6 mm).

501.3.07 Contractor Warranty and Maintenance

General Provisions 101 through 150.

501.4 Measurement

Structural steel will be measured either per pound (kilogram) or per Lump Sum.

- **Per pound (kilogram) basis.** The quantity of structural steel to be measured for payment will be the net weight of metal in the completed and accepted structure.

  A unit weight of 490 lbs/ft³ (7850 kg/m3) will be used to calculate the net weight of steel. The weights of rolled shapes or plates will be computed based on their nominal weight per foot (meter) as listed in standard handbooks such as the AISC Manual of Steel Construction.

- **Lump sum basis.** When the Plans specify a Lump Sum basis, this work will be measured as an accepted Lump Sum quantity, complete in place. Tabulated quantities are shown on the Plans as a service, but they do not relieve the Contractor of conforming to Plan details. If the Plan details and tabulated quantities differ, the Plan details will govern. The Contractor shall determine the actual quantities required before submitting a bid.

501.4.01 Limits

A. Qualification

Assume the cost of qualification tests and test sample preparation required under these Specifications. This cost is considered incidental to The Work.

B. Testing

Ultrasonic or magnetic-particle testing by the Department of Transportation under its quality assurance inspection rate of approximately 25 percent of welds will be performed at no cost to the Contractor.

The Contractor shall assume the cost of additional ultrasonic or magnetic-particle testing above the 25 percent rate to determine the extent of weld defects and to check corrected work. The rate for this extra testing will be $75 per hour for the Inspector, equipment, travel, and subsistence.

If the Contractor is equipped with satisfactory ultrasonic or magnetic-particle inspection equipment, the Contractor may test the Work corrected in the shop at no additional expense to the Department, but the Engineer will interpret the ultrasonic and magnetic-particle inspection.

501.5 Payment

This work will be paid for at the Contract Price per pound (kilogram) of structural steel or per Lump Sum, each complete in place. The Contract Price for structural steel includes the costs of labor and equipment and the direct or incidental costs of furnishing easy access for inspection and testing.

Payment will be made under:

Item No. 501	Structural steel, Bridge No._____	Per lump sum
Item No. 501	Structural steel	Per lb (kg)
Item No. 501	Structural steel-swaybracing	Per lb (kg

501.5.01 Adjustments

A. Payment Conditions

The cost of steel joints and metal bearing assemblies used in structures with no structural steel Pay Item shall be included in the Contract Price for superstructure concrete, unless otherwise shown on the Plans.

When authorized changes are made, the Lump Sum payment will be adjusted on a negotiated basis.

On projects with multiple bridges, payments will be applied on an individual bridge **basis**.

Upon satisfactory completion of the erecting, bolting, and welding of structural steel for the bridge, 95 percent of the Contract Price, either per Lump Sum Basis or per pound (kilogram) basis, will be included for payment on the next statement.

Steel spans are considered satisfactorily erected when they are placed in their final positions on the substructure, properly spaced, and anchored down. Bolting is considered satisfactorily complete when defective welds are repaired and found satisfactory by additional inspection.

Upon satisfactory completion of field painting, the remaining 5 percent of the Contract Price will be included for payment on the next statement.

Material allowance payments of structural steel will be determined and paid for in accordance with the requirements of Section 109.

Section 502—Timber Structures

502.1 General Description

This work consists of constructing timber bridges and other timber structures complete in place.

502.1.01 Definitions

General Provisions 101 through 150.

502.1.02 Related References

A. Standard Specifications

Section 501—Steel Structures

Section 520—Piling

Section 645—Repair of Galvanized Coatings

Section 852—Miscellaneous Steel Materials

B. Referenced Documents

AWPA Standard M4, "Standard for the Care of Preservative Treated Wood Products"

502.1.03 Submittals

General Provisions 101 through 150.

502.2 Materials

All materials shall meet the requirements of the following Specifications:

Material*	Section
Lumber and Timber	860
Piling and Round Timber	861
Preservative Treatment of Timber Products	863
Miscellaneous Metals	858
Structural Steel	851
Plain Cotton Duck	881
Miscellaneous Steel Materials	852
Paint	870
*Insofar as practicable, all cutting, framing, and boring of treated timber shall be done before treatment.	

A. Miscellaneous Hardware

Galvanize the following items according to Subsection 852.2.04.B.3, "Galvanizing":

- Bolts
- Nuts
- Washers
- All hardware including (but not limited to) special couplings, dowels, and spikes

Repair damaged galvanized coatings according to Section 645.

Nails may be black or galvanized.

B. Structural Purposes and Grades

Lumber and timber meeting the requirements given in Table 1 of Section 860, “Lumber and Timber”, shall be used for the structural purposes shown therein.

502.2.01 Delivery, Storage, and Handling

A. Handling Timber

Handle timber carefully without dropping it, breaking the outer fibers, bruising it, or piercing it with tools.

Handle timber with non-metallic slings.

B. Storing Materials

Place all stored material in well-drained locations and keep these locations free from weeds and rubbish.

Comply with the following material-specific storage guidelines:

1. Untreated Timber and Piling
   Store untreated materials as follows:
   a. Open stack the materials at least 12 in (300 mm) above the ground.
   b. Pile the materials so water can run off them to prevent warping.
   c. Protect the materials with durable waterproof covering approved by the Engineer.
2. Treated Timber and Piling
   Close stack treated materials at least 12 in (300 mm) above the ground and pile them to prevent warping.
3. Timber After Fabrication
   Store this timber so the members do not change dimensions before they are assembled.
4. Hardware and Miscellaneous Metal
   Place metal material in covered storage and protect it from rust and other damage.

502.3 Construction Requirements

General Provisions 101 through 150.

502.3.01 Personnel

General Provisions 101 through 150.

502.3.02 Equipment

General Provisions 101 through 150.

502.3.03 Preparation

General Provisions 101 through 150.

502.3.04 Fabrication

General Provisions 101 through 150.

502.3.05 Construction

A. Making Field Repairs and Applying Treatments and Coatings

Make field repairs and apply treatments and coatings as follows:

1. Repair and Apply Treatments to Treated Timber
   Carefully trim cuts and abrasions in creosoted timber or piles and treat them with either of the following:

- Two hot applications of 60 percent creosote oil mixed with 40 percent roofing pitch
- Two thorough brush coats of hot creosote oil followed by a covering of hot roofing pitch

For field treatment of other preservatives, see AWPA Standard M4 entitled, "Standard for the Care of Preservative Treated Wood Products."

a. Bolt Holes

Treat bolt holes with creosote oil using an approved, manufacturer-recommended, pressure bolt hole treater.

After the treatment, plug unfilled holes with creosoted plugs.

b. Temporary Holes

When the approved use of temporary forms or braces results in nail or spike holes in treated timbers or piles, fill these holes by driving galvanized nails or spikes flush with the surface or by plugging as specified in Subsection 502.3.05.A.1.a, "Bolt Holes."

c. Countersunk Holes

Treat these holes with hot creosote oil before placing the bolts. After placing the bolts, fill the holes with hot roofing pitch.

2. Apply Treatment to Pile Heads

See Subsection 520.3.05.J, "Repair and Treat Timber Piling," step 5.

B. Framing

Cut and frame lumber and timber to a close fit so the joints will have an even bearing over the entire contact surface. The Department does not permit shimming or open joints.

Match-mark timbers requiring an exact fit.

1. Meet Workmanship Requirements

Ensure that workmanship meets the following standards:

a. Nails and Spikes

Drive nails and spikes hard enough to set their heads flush with wooden surfaces. Replace bent nails or spikes.

The Department considers deep hammer marks on wooden surfaces poor workmanship. The Department may reject the work with these characteristics.

b. Steel Plates and Structural Shapes

Workmanship on steel plates and structural shapes shall meet the requirements of Section 501.

2. Drill Holes for Bolts, Dowels, Rods, and Lag Screws

Drill holes with the following diameters to receive these hardware items

Hardware	Hole Diameter
Round drift bolts and dowels	1/16 in (2 mm) smaller than the diameter of the hardware
Square drift bolts and dowels	Same as the smallest dimension of the hardware
Machine bolts	Same as the diameter of the hardware
Rods	1/16 in (2 mm) larger than the diameter of the hardware
Lag Screws	No larger than the body of the screw at the base of the thread

Countersink holes wherever smooth faces are required.

3. Use Bolts and Washers

Use washers of the size and type specified on the Plans under bolt heads and nuts to prevent them from contacting the wood.

After completely adjusting the nuts, do the following:

a. Cut the excess length off of bolts projecting more than 1 in (25 mm) beyond the nuts.

b. Burr the bolt threads.

c. Coat the bolt ends with galvanizing repair compound according to Section 645.

C. Constructing Timber Substructures

Construct the timber substructure as follows:

1. **Drive the Pile Bents.** See Section 520.3.05.E, "Drive Piling."
2. **Place the Caps.** Place timber caps so the bearing on their supports is evenly secured and their ends are evenly aligned. Drift bolt the caps to piles and posts.
3. **Bolt the Bracing.** Bolt timber braces where they intersect with piles and posts.

D. Constructing Timber Superstructures

Construct the timber superstructure as follows:

1. **Install Stringers.** Install stringers using these guidelines:
   - Where stringers bear over the width of floor beams and caps, size the stringers to a uniform grade.
   - Ensure that lapped ends of treated stringers contact each other.
   - Neatly and accurately frame cross-bridging between stringers.
   - Securely toenail the cross bridging by driving at least two nails in each end.
2. **Lay Single Plank Floors.** Lay these floors using these guidelines:
   - Lay planks with the adjacent planks drawn together tightly.

     Lay the plank so the thickness of adjacent planks varies by no more than 1/16 in (2 mm).
   - Spike each plank to each joist or nailing strip using at least two spikes.

     The spike length shall be at least 3 in (75 mm) greater than the thickness of the planks.
   - Carefully grade the plank thickness.
3. **Lay Laminated or Strip Floors.** Lay these floors using these guidelines:
   - Dress strips to a uniform thickness of no more than 3 in (75 mm) and to a uniform width when specified on the Plans.
   - Place strips on the edge and at right angles to the roadway center line.
   - Spike each strip to the adjacent strip at 2 ft (600 mm) intervals by staggering succeeding spike locations 8 in (200 mm) from preceding locations.

     Ensure that the spike length is sufficient to pass through two strips and at least halfway into the third.
   - Toenail strips to the stringers with 20 d (4 mm) nails.

     Instead of toenailing, the Contractor may drive spikes vertically through the strip if they penetrate the stringer at least 3 in (75 mm).
4. **Frame and Erect Hub Guards and Railings.** Accurately frame and erect hub guards, scupper blocks, joist blocks, and railings to true line and grade. Use these guidelines when erecting hub guards and railings:
   - Dress hub guards, scupper blocks, railings, and rail posts on all four sides.
   - Securely spike the scupper blocks in place.
   - Bolt the hub guards through the scupper blocks, floor planks, and, if required, through the outside joists or nailing pieces.
   - Lay hub guards in sections at least 12 ft (3.7 m) long.

502.3.06 Quality Acceptance

General Provisions 101 through 150.

502.3.07 Contractor Warranty and Maintenance

General Provisions 101 through 150.

502.4 Measurement

A. Structural Metal

Plates and structural shapes required on the Plans will be measured for payment as specified on the Plans only when set up as a Specified Pay Item. Measurement will then be made as provided in Subsection 501.4, “Measurement,” and the cost shall not be included in the Contract prices for lumber and timber.

Otherwise, no separate measurement for payment will be made, and the cost shall be included in the Contract prices for lumber and timber.

B. Lumber and Timber

Lumber and timber will be measured per thousand feet(cubic meter) board measure (MBM). Quantities in the structure will be computed based upon nominal sizes and the actual length in place.

502.4.01 Limits

A. Timber Piling

Timber piling shall be furnished, driven, and measured as a Pay Item under Section 520 unless otherwise specified.

B. Splices

No additional measurement will be made for splices except for overlaps shown on the Plans.

C. Hardware

No separate measurement for payment will be made for items such as the following:

- U-bolts
- V-bolts
- Oval head bolts
- Special couplings
- Bolts
- Nuts
- Washers
- Dowels
- Nails
- Spikes
- Other hardware.

The cost of these items shall be included in the Contract Unit Price bid for timber.

502.5 Payment

A. Structural Metal

The quantity of structural metal (determined as described below in Subsection 502.4.A “Structural Metal”, will be paid at the Contract Price according to Subsection 501.5, “Payment” for Steel Structures.

B. Lumber and Timber

Lumber and timber will be paid for at the Contract Unit Price bid per thousand feet board measure (MBM) (cubic meter), complete in place and accepted. The payment will be full compensation for material, labor, and equipment necessary to complete the Work as shown on the Plans and as described in this Specification. Payment includes incidentals and all costs, both direct and indirect.

Payment will be made under:

Item No. 502	Bridge timber (untreated)	Per MBM (cubic meter)
Item No. 502	Bridge timber (treated)	Per MBM (cubic meter)

502.5.01 Adjustments

General Provisions 101 through 150.

Section 503—Four Hour Accelerated Strength Concrete

503.1 General Description

Specifications for this work will be included elsewhere in the Contract.

Section 504—Twenty-Four Hour Accelerated Strength Concrete

504.1 General Description

This work consists of manufacturing and placing accelerated strength concrete designed to produce a compressive strength of 2,500 psi (17 MPa) within 24 hours.

Except as modified in this Specification, the provisions of Section 500 shall apply to concrete produced and placed under this Specification.

504.1.01 Definitions

General Provisions 101 through 150.

504.1.02 Related References

A. Standard Specifications

Section 109—Measurement and Payment

Section 500—Concrete Structures

B. Referenced Documents

AASHTO M 194, Type E, Table I

504.1.03 Submittals

A. Approve Chemical Admixture for Concrete

Ensure that the manufacturer submits an affidavit that the chemical admixture for concrete meets the requirements of AASHTO M 194, Type E, Table I.

B. Establish Concrete Mix Proportions

Choose one of the following two procedures for establishing concrete mix proportions for concrete placed under this Specification.

Notify the Engineer of the chosen procedure at least 45 days before placing the concrete.

1. Concrete Mix Proportions Established by the Contractor

   The Contractor may propose specific concrete mix design proportions for concrete placed under this Specification. In this case, the Contractor shall meet these requirements:

   a. Ensure that all materials are from approved sources or from materials stored or stockpiled at the site.

   b. Have all materials tested before they are used.

   c. Have the laboratory verify that the proposed proportions will produce concrete that develops 2,500 psi (17 MPa) within 24 hours.

      Proposed mixes may be approved without laboratory design study when they include commonly used material combinations.

2. Concrete Mix Proportions Established by the Department

   The Contractor may choose to have the Department establish the concrete mix proportions. However, the Department's approval of the design mix does not relieve the Contractor of the responsibility to produce concrete with the specified compressive strength of 2,500 psi (17 MPa).

   The Department will establish the proportions as follows:

   a. The Contractor shall notify the Office of Materials of the proposed sources of all materials.

   b. The Department will establish the job mix proportions from materials representative of the materials proposed for use, provided all materials conform to their respective Specifications.

   c. The Office of Materials will determine the following based upon materials intended for use:

      - Minimum cement content
      - Required water content
      - Quantities of aggregate
      - Addition rates of admixtures

   d. The Department will make the proportions available as public information within one month after the Contractor proposes the material sources.

   e. The Department will not allow materials to be substituted after releasing an approved design unless the Office of Materials approves of the substitution.

      The Department will base job mix design proportions upon the following table:

Minimum Cement cwt/cu yd (kg/ m^3)	Maximum Water Cement Ratio lbs/ lbs (kg/kg)	Minimum Compressive Strength at 24 Hours psi (MPa)	Air Content (%)	Slump Range inch (mm)
7.52 (446)	0.45	2500 (17)	3 to 6	2 to 5(50 to 125)

      The Department will accept initial design admixture meeting the requirements of materials established in this Specification. However, the Department will not approve any combination of admixture and cement that produces undesirable characteristics of set time or strength development.

504.2 Materials

All materials shall meet the requirements of the following Specifications:

Material	Section
Portland Cement (Type I or Type III)	830.2.01
Air-Entraining Admixtures	831.2.01
Coarse Aggregate, Class A or B, Gravel or Stone	800.2.01
Fine Aggregate, Size No. 10	801.2.02
Chemical Admixtures	831.2.02
Calcium Chloride	884.2.01
Water	880.2.01

The concrete acceleration admixtures may be either of the following:

- Calcium chloride
- A chemical admixture

  The Engineer must authorize chemical admixtures before they are used for concrete. Admixtures will be approved only if an acceptable concrete design is established in the laboratory with materials representative of those proposed for use.

Do not use accelerators containing chlorides in prestressed concrete; or, in bridges or box culverts when the concrete containing the additive will contact the reinforcement steel

504.2.01 Delivery, Storage, and Handling

General Provisions 101 through 150.

504.3 Construction Requirements

General Provisions 101 through 150.

504.3.01 Personnel

A. Quantity of Personnel

Provide enough labor to place, consolidate, and screed each batch of concrete within one hour after introducing the cement and first mixing water into the mix.

Do not place concrete when there are not enough personnel to meet this requirement.

504.3.02 Equipment

A. Quantity of Equipment

Provide enough equipment to place, consolidate, and screed each batch of concrete within one hour after introducing the cement and first mixing water into the mix.

Do not place concrete when there is not enough equipment to meet this requirement.

B. Portable Mixers

The Engineer may approve portable mixers when placement quantities at a given location are less than one cubic yard (meter).

504.3.03 Preparation

General Provisions 101 through 150.

504.3.04 Fabrication

General Provisions 101 through 150.

504.3.05 Construction

A. Batch and Mix Materials

1. Transit-Mixed Concrete

   When transit-mixed concrete is used for concrete containing an acceleration admixture, do the following:

   a. At the plant, mix the concrete ingredients, excluding the acceleration admixtures and 3 gal (15 L) of withheld water per cubic yard (meter) of concrete, at mixing speed for 35 revolutions of the drum.

   b. Mix the concrete enroute to the job site at an agitating speed of no more than three revolutions per minute.

   c. At the job site, add the acceleration admixture and withheld mixing water to the concrete according to these requirements:

      1) The Engineer will approve the method of adding the acceleration admixture and withheld mixing water.

      2) The Contractor shall measure the admixture into the concrete with an accuracy of plus or minus three percent.

      3) The Contractor shall not add accelerating admixture to concrete that has attained the age of 45 minutes as measured from the beginning of the initial mixing at the plant.

   d. Mix the concrete for 40 additional revolutions at mixing speed.

2. Central-Mixed Concrete

   When central-mixed concrete is used for concrete containing an acceleration admixture, do the following:

   a. Shrink-mix all concrete ingredients, excluding acceleration admixture and 2 gal (10 L) of withheld water per cubic yard (cubic meter), in the central mixer.

   b. Mix the above ingredients enroute to the job site at agitating speed.

      All other provisions of Subsection 504.3.05.A.1, “Transit-Mixed Concrete,” shall apply for adding the acceleration admixture and mixing the concrete at the job site.

B. Cure Concrete

Cure the concrete according to Subsection 500.3.05.Z, “Cure Concrete,” except that the Engineer may waive the concrete curing period when test results indicate the compressive strength exceeds 2500 psi (17 MPa).

All provisions of Subsection 500.3.05.X, “Pour Concrete in Cold Weather,” shall apply except that the protection requirements in step 2 of Subsection 500.3.05.X may be suspended when test results indicate the compressive strength exceeds 2500 psi (17 MPa).

504.3.06 Quality Acceptance

A. Compressive Strength Testing

Compressive strength testing are conducted as follows:

1. Georgia DOT personnel will cast four test cylinders for each day of concrete placement.
2. Georgia DOT personnel will store the cylinders on or adjacent to the pour in a moist condition.
3. Minimum compressive strength shall be according to either of the following for an average of two specimens

Strength development at 24 hours	2,500 psi (17 MPa)
Strength development at 3 days	3,500 psi (24 MPa)

504.3.07 Contractor Warranty and Maintenance

General Provisions 101 through 150.

504.4 Measurement

Twenty-four-hour accelerated strength concrete will be measured for payment by the square yard (meter) or cubic yard (meter) as indicated on the Plans and in the Proposal.

- Square yard (meter) measurements shall be as defined in Section 109.
- For structure concrete, cubic yard (meter) measurements will be the algebraic summation of the Plan quantity and any authorized quantity changes.

504.4.01 Limits

General Provisions 101 through 150.

504.5 Payment

Twenty-four-hour accelerated strength concrete will be paid for at the Contract Unit Price bid either by the cubic yard (meter) or square yard (meter) as shown on the Plans or in the Proposal.

Payment will be made under:

Item No. 504	Twenty-Four-Hour Accelerated Strength Concrete	Per cubic yard (meter)
Item No. 504	Twenty-Four-Hour Accelerated Strength Concrete	Per square yard (meter)

504.5.01 Adjustments

General Provisions 101 through 150.

Section 505—Corrugated Steel Bridge Plank

505.1 General Description

This work consists of installing bridge flooring of corrugated steel complete in place and according to the Plans and Specifications.

505.1.01 Definitions

General Provisions 101 through 150.

505.1.02 Related References

A. Standard Specifications

Section 501—Steel Structures

Section 535—Painting Structures

Section 852—Miscellaneous Steel Materials

Section 870—Paint

B. Referenced Documents

General Provisions 101 through 150.

505.1.03 Submittals

General Provisions 101 through 150.

505.2 Materials

All materials shall meet the requirements of the following Specifications:

Material	Section
Corrugated Steel Plank for Bridges	852.2.04
Paint	870

505.2.01 Delivery, Storage, and Handling

General Provisions 101 through 150.

505.3 Construction Requirements

505.3.01 Personnel

General Provisions 101 through 150.

505.3.02 Equipment

General Provisions 101 through 150.

505.3.03 Preparation

General Provisions 101 through 150.

505.3.04 Fabrication

A. In-Shop Fabrication Requirements

Fabricate plank from steel plate of the thickness shown on the plans. Form the plank to a minimum size of at least 13 in (330 mm) wide by 2 in (50 mm) deep with at least two complete corrugations. The section modulus per inch (millimeter) shall be equal to or greater than that shown on the Plans.

1. Holes for Welded Attachment to Beams

   Shop-punch holes for welded attachment to beams and space the holes as shown on the Plans.
2. Painting

   Shop painting shall be of the paint type and the number of coats shown on the Plans.

505.3.05 Construction

A. Installing Plank

Install the corrugated steel bridge plank as follows:

1. Place the plank as shown on the Plans.
2. Ensure that the bottom corrugations have full bearing on supporting members.
3. Hold the bottom corrugations in full contact with the supporting members until they are securely connected according to the details shown on the Plans.

B. Welding

All welds shall be of the type and size, and be placed at the location shown on the Plans. All welding shall meet the requirements of Subsection 501.3.06.C, “Welded Construction.”

C. Field Painting

Apply the type of paint and the number of coats shown on the Plans according to Section 535.

505.3.06 Quality Acceptance

General Provisions 101 through 150.

505.3.07 Contractor Warranty and Maintenance

General Provisions 101 through 150.

505.4 Measurement

This work will be measured for payment in square feet (meters), including laps of accepted planks.

505.4.01 Limits

General Provisions 101 through 150.

505.5 Payment

This work will be paid for at the Contract Price per square foot (meter) for corrugated steel bridge plank complete in place.

Payment will be made under

Item No. 505	Corrugated Steel Bridge Plank	Per square foot (meter)

505.5.01 Adjustments

General Provisions 101 through 150.

Section 506—Expanded Mortar

506.1 General Description

This work consists of making and placing expanded mortar composed of a special Portland cement concrete and an aluminum powder additive.

506.1.01 Definitions

General Provisions 101 through 150.

506.1.02 Related References

A. Standard Specifications

Section 800—Coarse Aggregate

Section 801—Fine Aggregate

Section 830—Portland Cement

Section 835—Aluminum Powder

Section 880—Water

B. Referenced Documents

General Provisions 101 through 150.

506.1.03 Submittals

General Provisions 101 through 150.

506.2 Materials

All materials shall meet the requirements of the following Specifications:

Material	Section
Portland Cement, Type I	830.2.01
Coarse Aggregate, Class A or B Stone, Size No. 89	800.2.01
Fine Aggregate, Size No. 10	801.2.02
Water	880.2.01
Aluminum Powder	835.2.01

506.2.01 Delivery, Storage, and Handling

General Provisions 101 through 150.

506.3 Construction Requirements

506.3.01 Personnel

General Provisions 101 through 150.

506.3.02 Equipment

General Provisions 101 through 150.

506.3.03 Preparation

A. Using Expanded Mortar for Shear Keys

When using expanded mortar for shear keys on precast bridge decks, thoroughly clean and saturate the recesses in the precast decks with clean water before placing the mortar.

506.3.04 Fabrication

General Provisions 101 through 150.

506.3.05 Construction

Mix and use expanded mortar according to the following:

A. Proportion Expanded Mortar

Ensure that the expanded mortar consists of a fresh mixture of the composition given in the following table:

Proportions for Expanded Mortar				
Pounds (kilograms) of Portland Cement	Lbs(kgs) of Saturated Surface Dry Aggregate per Bag of Cement		Maximum Water per Bag of Cement	Quantity of Aluminum Powder
	Fine	Coarse		
94 (42.6)	140 (63.5)	140 (63.5)	6 gal (22.7 L)	1 level tsp. (5 mL)

B. Mix Expanded Mortar

Mix the materials as follows:

1. Mix the materials dry, either in a clean mixer or in a clean, tight box until a uniform mixture is produced.
2. Add enough water to produce the desired consistency, but do not add more water than specified in the “Proportions for Expanded Mortar” table in Subsection 506.3.05.A.

C. Use Expanded Mortar

Begin using the expanded mortar according to the temperature requirements in the following table:

Temperature	Required Action
> 90 °F (> 32 °C)	Use mortar within 15 minutes after mixing.
70 °F to 90 °F (21 °C to 32 °C)	Use mortar within 30 minutes after mixing.
40 °F to 70 °F (4 °C to 21 °C)	Use mortar within 30 minutes after mixing.*
*Mortar may require additional aluminum powder to secure the required expansion. Additional amounts shall range from 0% at 70 °F (21 °C) to 100% at 40 °F (4 °C) in a straight-line proportion.	

D. Place Expanded Mortar

Place the expanded mortar as follows:

1. Expanded Mortar for Shear Keys
   a. Completely fill the shear key with mortar.
   b. Rod the mortar into a dense, homogenous mass.
   c. Float the mortar off flush with the surface of the precast decks.
   d. Moist cure the mortar continuously for a minimum of three days.
2. Placement Restrictions

   Do not place the mortar until after the entire bridge has been erected and all units are in final alignment.

   Do not allow traffic on the bridge decks until 5 days after the expanded mortar is placed.

506.3.06 Quality Acceptance

General Provisions 101 through 150.

506.3.07 Contractor Warranty and Maintenance

General Provisions 101 through 150.

506.4 Measurement

Expanded mortar is not measured for separate payment.

506.4.01 Limits

General Provisions 101 through 150.

506.5 Payment

Expanded mortar will be paid for at the Contract Price for concrete of the same Class as the concrete the mortar comes in contact with, and the Contractor shall include the cost of expanded mortar in the Contract Price for such concrete.

506.5.01 Adjustments

General Provisions 101 through 150.

Section 507—Prestressed Concrete Bridge Members

507.1 General Description

This work consists of furnishing prestressed concrete bridge members, complete in place, except as noted for piling in this Specification. The work includes all items and work necessary to complete the erection according to the Plans and Specifications. All prestressed concrete bridge member nominal lengths shown on the plans are horizontal dimensions. The contractor will be responsible for adjusting the lengths, as necessary, to account for the final erected position of the member. Fabricate the ends of all members to be vertical in the final erected position. Slope bearing assemblies to accommodate the erected position of the member.

507.1.01 Definitions

PSC: Prestressed concrete. Prestressed concrete may be designated "PSC" in Specifications and on Plans and other documents.

507.1.02 Related References

A. Standard Specifications

Section 109—Measurement and Payment

Section 500—Concrete Structures

Section 501—Steel Structures

Section 506—Expanded Mortar

Section 520—Piling

Section 865—Manufacture of Prestressed Concrete Bridge Members

B. Referenced Documents

General Provisions 101 through 150.

507.1.03 Submittals

A. Erection Drawings

Furnish erection drawings to the Department only when the units are not interchangeable with respect to the following:

- Transverse placement within a span
- Longitudinal reversal within a span

The drawings shall cover superstructure unit placement, including bearing components.

B. Shop Drawings

Submit shop drawings to the Department on standard Plan size 22 in x 36 in (550 mm x 900 mm) sheets showing complete beam details of the following:

- Nonprestressed reinforcement
- The method of retaining depressed strands in place
- Calculations for determining the strand elongation required to produce the specified pretensioning force
- Detensioning schedule
- Increased length of beam due to vertical alignment

As an option, shop drawings may be submitted on plan sheet sizes of 12” x 18” (305 mm x 457 mm) or 11” x 17” (279 mm x 432 mm) for review and approval. Information contained on these sheets must be legible.

After shop drawings have been approved, submit an electronic file that is compatible with Bentley Microstation J (Version 7) Cadd operating system, or an electronic file in Adobe Acrobat Portable Document Format (.pdf) to the Engineer. For bridges carrying railroads only, after shop drawings have been approved, submit one full size set of reproducible drawings to the Department.

507.2 Materials

All materials and manufacturing methods shall meet the requirements of Section 865. Reference is also made to the following:

Material	Section
Plain Steel Bars—Threaded Ends	853.2.05
Anchor Bolts	852.2.02
Bronze Bushings, Bearings, and Expansion Plates	857
Structural Steel	851.2.01
Elastomeric Pads	885.2.01
Plain Cotton Duck	881.2.01
Rubber Impregnated Cotton Duck	881.2.02
Paint	870

Substitute materials according to Subsection 865.2.01.B.3, “Substitution of Reinforcement” and Subsection 865.2.01.B.4, “Substitution of Strands.”

507.2.01 Delivery, Storage, and Handling

A. General Delivery, Storage, and Handling

See Subsection 865.2.01, “Prestressed Concrete Bridge Members.” Replace members damaged in handling or storage (at no additional expense to the Department) unless the Engineer determines that the member is usable.

B. Handling PSC Beams

In handling PSC beams, the Contractor shall ensure that beams maintain an upright position at all times and shall pick up beams at their pickup and support points (see Subsection 865.2.01.B.14.e, “Beams”).

Disregarding this requirement could cause a bridge member to collapse.

507.3 Construction Requirements

507.3.01 Personnel

General Provisions 101 through 150.

507.3.02 Equipment

General Provisions 101 through 150.

507.3.03 Preparation

General Provisions 101 through 150.

507.3.04 Fabrication

See Subsection 865.2.01.B, “Fabrication.”

507.3.05 Construction

A. Prepare Bearing Areas

Requirements for preparing steel bearing areas for PSC bridge members will be the same as those specified in Section 501 for Steel Structures, listed below. Other requirements are also noted below:

1. Steel on Concrete

   See Subsection 501.3.05.C.1, "Steel on Concrete."
2. Steel on Steel

   See Subsection 501.3.05.C.2, "Steel on Steel."
3. Steel on Self-Lubricating Bronze Plates

   See Subsection 501.3.05.C.3, Steel on Self-lubricating Bronze Plates."
4. Steel on Elastomeric Pads

   See Subsection 501.3.05.C.4, Steel on Elastomeric Pads."
5. Concrete on Concrete

   For concrete caps that PSC deck units will bear directly on, prepare bearing areas as follows:

   a. Finish the concrete caps with the Type IV—Floated Surface Finish specified in Subsection 500.3.05.AB.5, "Type IV—Floated Surface Finish."

   b. Cover the caps with asphalt-saturated felt as noted on the Plans.

      The Contractor may use felt of a lighter weight than that required on the Plans by increasing the number of layers proportionally.
6. Concrete on Timber Piling

   For treated timber piles that will support PSC caps, prepare bearing areas as follows:

   a. Cut off the pile heads.

   b. Have the piles field treated as specified in Subsection 520.3.05.J, "Repair and Treat Timber Piling."

   c. Protect the piles according to the applicable Specifications.

B. Erecting PSC Bridge Members

Erect bridge members according to the handling requirements in Subsection 507.2.01, "Delivery, Storage, and Handling," and as follows. Refer questions concerning structural requirements to the Engineer.

1. Beams

   Erect beams as follows:

   a. Erect beams in conformity with true longitudinal alignment and transverse placement as shown on the Plans or as directed by the Engineer.

   b. Ensure that the locations of fixed and expansion ends are as shown on the Plans or as directed by the Engineer.

   c. Do not weld in place structural steel bearing devices that will rest directly upon elastomeric pads while the devices are bearing against the pads.
2. Caps

   Erect PSC caps as follows:

   a. Align and grade the caps according to the Plans.

   b. Drift the caps to the timber pile heads according to the Plans.

   c. Proportion and mix expanding mortar according to Section 506.

An approved mortar may be substituted for the expanded mortar as long as it is nonshrinking and commercially produced.

d. Fill the drift pin holes with the expanding mortar according to Section 506.

3. Deck Units

Erect PSC deck units (such as flat slabs and double tees) that will bear directly on caps so that all sections have a smooth, uniform bearing on the caps.

a. **Aligning Deck Units.** Base the final deck unit alignments on the alignment of the traffic faces of the exterior section curbs.

b. **Shimming.** If shimming is necessary to achieve proper riding surface, grade, or proper bearing uniformity, use steel shims and cut them to the following dimensions:

- The same shape as the area to be shimmed
- The thickness required to produce the required elevation and load distribution

c. **Restrictions.** If the Engineer approves deck erection procedures that involve placing heavy lifting equipment on the decks, do not place the equipment until the cap drift pin mortar reaches 3000 psi (20 MPa).

4. Shear Keys

Pour expanding mortar into shear keys between deck units as follows. The mortar shall meet the requirements of Section 506.

a. Erect the entire bridge.

b. Ensure that all units are in final alignment.

c. Pour the mortar in the shear keys.

d. Continuously moist cure the keys for at least three days.

e. Keep traffic off the structure for at least 5 days.

5. Anchor Bolts and Nut Adjustment

Place anchor bolts and adjust nuts according to Subsection 501.3.05.B.3, “Place Anchor Bolts and Adjust Nuts.”

6. Deck Grading

Make sure PSC bridge members are 45 days old before grading the bridge deck for screeding.

C. Tighten Diaphragm Bars

Tighten diaphragm bars as follows:

1. Bring the diaphragm bar nuts to a snug fit against the beams.
2. Pour the diaphragm.
3. Allow the diaphragm concrete to age at least 5 days and reach at least 1,500 psi (10 MPa).
4. Tighten the nuts fully.
5. Cut off the excess bar length.
6. Place an approved grout in the recessed area provided for the bar’s nut and washer.

D. Concrete Finish

Use the Type III—Special Surface Coating Finish on PSC bridge members according to Subsection 500.3.05.AB and as follows:

- Beams -- Outside faces of certain exterior beams as indicated on the table of “Bridge Areas Bridge Areas Requiring a Type III Finish”, in Subsection 500.3.05.AB.

- Deck Units -- Traffic and top faces of curbs on exterior units and the outside faces of certain exterior beams as specified in the table of “Bridge Areas Requiring a Type III Finish”, in Subsection 500.3.05.AB..

507.3.06 Quality Acceptance

General Provisions 101 through 150.

507.3.07 Contractor Warranty and Maintenance

General Provisions 101 through 150.

507.4 Measurement

A. Prestressed Concrete Piling

Prestressed concrete piling shall be furnished, driven, and measured as a Pay Item under Section 520.

B. Beams

Accepted PSC beams will be measured in linear feet (meters) of each different type designation of beam.

Linear measurements will be the nominal lengths shown on the Plans.

Beam type designations will be shown on the Plans and will be related to any of the following:

- Cross sectional area and prestress tendons
- AASHTO type
- Special design

C. Deck Units

Accepted PSC deck units (such as flat slabs and double tees) will be measured for payment per span of each different nominal span length.

D. Caps

Accepted PSC caps will be measured for payment per each cap.

E. Prestressed Concrete Box Beams

PSC box beams will be measured for payment by the linear foot (meter) of beam of each vertical depth and by the number of strands in the beam.

507.4.01 Limits

No separate measurement will be made for any of the following:

- Painting, rubbing, anchor, and bearing components, as well as diaphragm bar assemblies on accepted PSC beams
- Individual deck units on which curb sections are located
- Material used in anchor components, shear key pours, and construction expansion joints
- Drifting components, anchor components, and asphalt-saturated felt for PSC caps
- Grouting between PSC box beams
- Furnishing and installation of diaphragm bar assemblies and anchor and bearing components

507.5 Payment

Payment will be made under:

Item No. 507	PSC Beam (Type)	Per linear foot (meter)
Item No. 507	Box Beam (Depth/Strands)	Per linear foot (meter)
Item No. 507	PSC Deck Units_____ foot (meter) span	Per span
Item No. 507	PSC Caps	Per each

A. Beams

The quantity of beams, determined as provided in Subsection 507.4, "Measurement", will be paid for at the Contract Price per linear foot (meter) of each different type designation, complete in place.

B. PSC Box Beams

The quantity of PSC box beams will be paid for at the Contract Unit Price bid per linear foot (meter). Payment shall be full compensation for furnishing and erecting the beam.

C. Deck Units

The quantity of deck units will be paid for at the Contract Price per span of each different nominal span length, complete in place.

D. Caps

The quantity of caps will be paid for at the Contract Price per each, complete in place.

E. Partial Payments

Material allowance payments for bridge beams will be determined and paid for according to the requirements of Subsection 109.07, "Partial Payments."

507.5.01 Adjustments

Upon completion of the erection in its final manner and position, 95 percent of the Contract Price will be paid on the next statement.

If there is no field rubbing or painting required, the 95 percent may be increased to 100 percent of the Contract Price. If this work is required, the remaining 5 percent will be included on the next statement after the Contractor satisfactorily completes the work.

Section 508—Asphalt Plank Bridge Floor

508.1 General Description

This work consists of laying asphalt plank slabs as a wearing surface on a prepared bridge deck.

508.1.01 Definitions

General Provisions 101 through 150.

508.1.02 Related References

A. Standard Specifications

Section 530—Waterproofing Fabrics

B. Referenced Documents

General Provisions 101 through 150.

508.1.03 Submittals

General Provisions 101 through 150.

508.2 Materials

Ensure that materials meet the requirements of the following Specifications:

Material	Section
Premolded Asphalt Plank	825.2.01
Cutback Asphalt	821.2.01
Asphalt Cement	820.2.01

508.2.01 Delivery, Storage, and Handling

General Provisions 101 through 150.

508.3 Construction Requirements

508.3.01 Personnel

General Provisions 101 through 150.

508.3.02 Equipment

General Provisions 101 through 150.

508.3.03 Preparation

General Provisions 101 through 150.

508.3.04 Fabrication

General Provisions 101 through 150.

508.3.05 Construction

Construct the wearing surface of asphalt plank on a concrete base, timber base, or waterproofed base as follows:

A. Concrete Base

When laying the plank on a concrete base, construct the plank floor as follows:

1. Ensure that the concrete is dry and free from dust and rubbish.
2. Remove surplus talc and other powder from the base.
3. Apply approximately 1 gal (1 L) of cold cutback asphalt to each 100 ft² (9 m²) of surface.
4. Brush the cutback asphalt coat out well and allow it to dry.
5. Mop the surface with approximately 50 lbs (22 kg) of hot-applied asphalt cement for each 100 ft² (9 m²) of surface. Imbed the plank in the cement as follows:
   a. Mop and lay the plank simultaneously before the cement cools.
   b. Lay the plank straight and smooth with staggered joints. Ensure that the plank is free of irregularities.
   c. Crowd each plank snugly against adjacent planks so that seams and spaces between planks are completely filled with asphalt cement.

B. Timber Base

When laying the plank on a timber base, construct the plank floor as follows:

1. Securely spike the wooden floor upon which plank will be laid.
2. Ensure that the surfaces of adjacent planks do not vary by more than 1/8 in (3 mm).
3. Remove nails, dirt, rubbish, etc. before laying the asphalt plank.
4. Lay the plank the same as for a concrete base (see Subsection 508.3.05.A, “Concrete Base”).

C. Waterproofed Base

When laying the plank on a waterproofed base (see Section 530), lay the plank with the final mop of hot asphalt or tar described in Subsection 508.3.05.A.5.

1. Mop the surface and lay the plank simultaneously before the asphalt or tar cools.
2. Lay the plank as specified in Subsection 508.3.05.A.5 steps b and c.

508.3.06 Quality Acceptance

General Provisions 101 through 150.

508.3.07 Contractor Warranty and Maintenance

General Provisions 101 through 150.

508.4 Measurement

The Work is measured for payment in square yards (meters) of accepted plank:

- The length calculated is measured along the surface.
- The width calculated is the width of surface laid.

508.4.01 Limits

General Provisions 101 through 150.

508.5 Payment

This work will be paid for at the Contract Price per square yard (meter) for asphalt plank bridge floor complete in place.

Payment will be made under:

Item No. 508	Asphalt plank bridge floor _____ in (mm) thickness	Per square yard (meter)

508.5.01 Adjustments

General Provisions 101 through 150.

Section 509—Prestressing Concrete by Post Tensioning

509.1 General Description

This work consists of prestressing concrete by post-tensioning cast-in-place concrete. The work includes furnishing, placing, and tensioning prestressing steel according to the Plan details and these Specifications.

509.1.01 Definitions

Working Force and Working Stress: The force and stress remaining in the prestressing steel after the following losses:

- Creep and shrinkage of concrete
- Elastic compression of concrete
- Creep of steel
- Loss in post-tensioned prestressing steel from the sequence of stressing

- Friction and anchor set (see Subsection 509.3.05.J, "Post-Tension the Tendons," steps 18 to 19)
- Other losses peculiar to the method, technique, or system of prestressing (see Subsection 509.3.05.J, "Post-Tension the Tendons," step 21)

509.1.02 Related References

A. Standard Specifications

Section 501—Steel Structures

Section 535—Painting Structures

B. Referenced Documents

AASHTO Specifications for Highway Bridge, Article 9.16.1

AASHTO Specifications for Highway Bridge, Article 9.16.2

ASTM C 109

ASTM A 416

ASTM A 722

ASTM C 939

509.1.03 Submittals

A. Coupler Use and Location

The use and location of couplers in bars entering into the prestressing work is subject to the Engineer's approval.

B. Alternate Stressing or Anchorage Block Drawings and Calculations

When using stressing or anchorage blocks not shown on the Plans, submit shop drawings and calculations for the blocks to Bridge and Structural Design when submitting the prestressing system calculations and shop drawings.

C. Design Calculations

Submit design calculations for the proposed post-tensioning system to Bridge and Structural Design for Department review and approval. Design calculations may be on letter size sheets.

Submit calculations for the size and spacing of the reinforcing around the ducts, as shown in Figure 1, to Bridge and Structural Design. Include the following in the calculations:

- Required jacking force and elongation of tendons during tensioning

  Using the initial jacking force, design the reinforcing to prevent ducts from pulling out because of the effects of web curvature and slope.
- Stresses in anchorages and distribution plates

  Ensure that the calculations account for reinforcing to prevent the peeling of anchorages from the top and bottom slab. See Figure 2 for minimum reinforcing requirements for tying ducts to the deck reinforcing.
- Stress-strain curves typical of the prestressing steel to be furnished
- Seating losses
- Temporary overstresses
- Reinforcing in the concrete to resist tensioning loads

Determine bearing offsets and expansion joint gaps and adjust for construction sequence, prestress shortening, and temperature.

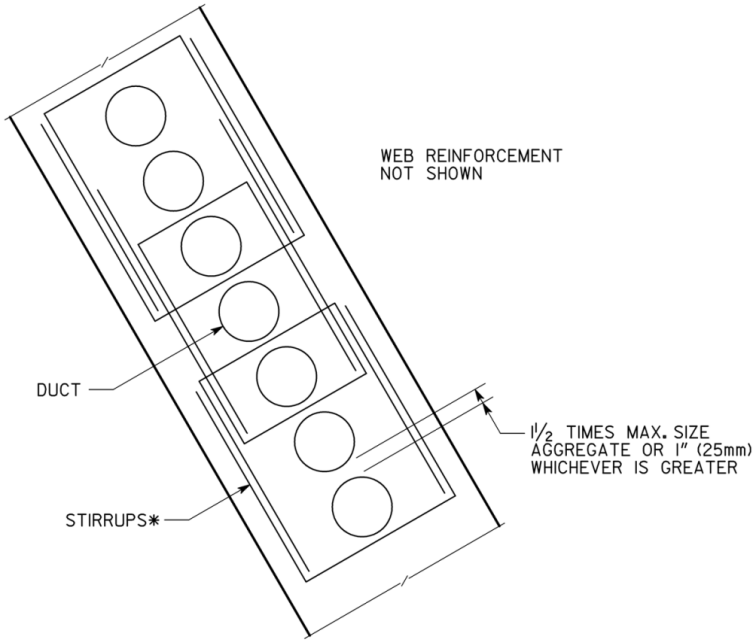

* A STIRRUP GROUP IS ONE PAIR OF OVERLAPPING "U" SHAPED BARS.
- STIRRUPS SHALL ENCLOSE VERTICAL WEB REINFORCEMENT.
- NO MORE THAN 3 DUCTS SHALL BE ENCLOSED BY A STIRRUP GROUP.
- MINIMUM BAR SIZE: NO. 4 (NO. 13M) BAR.
- MAXIMUM LONGITUDINAL BAR SPACING: 24 IN. (600mm).

Figure 1

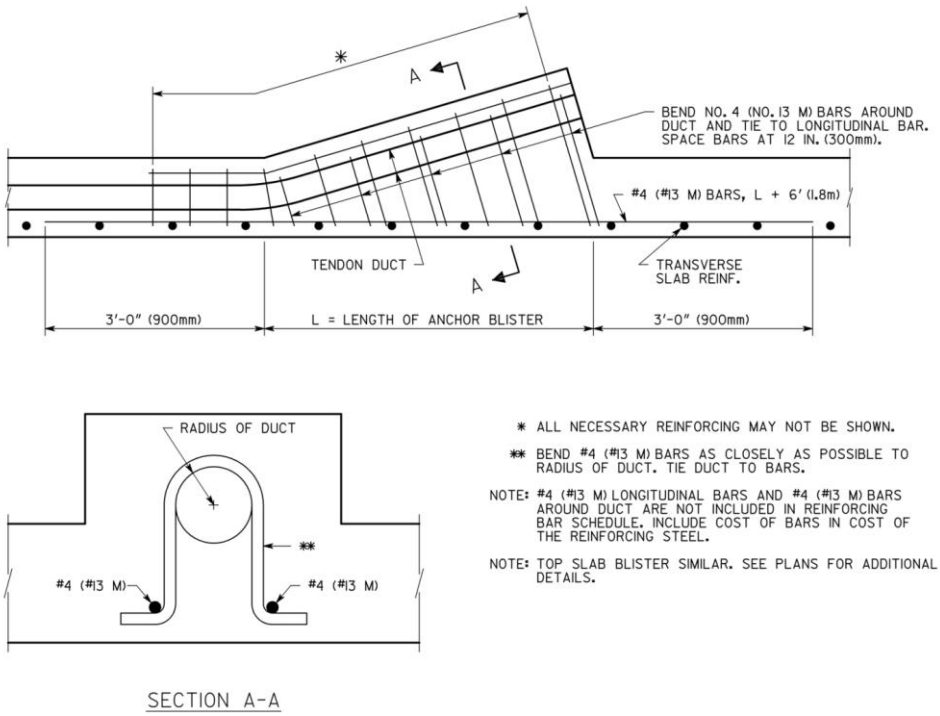

* ALL NECESSARY REINFORCING MAY NOT BE SHOWN.

** BEND #4 (#13 M) BARS AS CLOSELY AS POSSIBLE TO RADIUS OF DUCT. TIE DUCT TO BARS.

NOTE: #4 (#13 M) LONGITUDINAL BARS AND #4 (#13 M) BARS AROUND DUCT ARE NOT INCLUDED IN REINFORCING BAR SCHEDULE. INCLUDE COST OF BARS IN COST OF THE REINFORCING STEEL.

NOTE: TOP SLAB BLISTER SIMILAR. SEE PLANS FOR ADDITIONAL DETAILS.

Figure 2

D. Certificates of Compliance

The Department will accept certificates of compliance for cements to be used. The Department reserves the right, however, to sample and test the cement before its use and at any time during the progress of the work.

E. Certified Mill Test Reports

Submit certified mill test reports for high tensile prestressing steel to the Project Engineer.

F. Shop Drawings

Submit Shop Drawings for review and approval according to Subsection 501.1.03.B, "Shop Drawings." Place a title block in the lower right-hand corner of the drawings that includes the following:

- Project number
- Sheet numbering for the Shop Drawings
- Structure name
- Contractor and fabricator names

Submit Shop Drawings on 23 in by 36 in (575 mm by 900 mm) sheets with a 1-1/2 in (38 mm) left margin and a ½ in (13 mm) top, bottom, and right margins.

The Shop Drawings shall include the following:

1. Fully dimensional views showing all projections, recesses, notches, openings, blockouts, and pertinent design details
2. Details of mild steel reinforcing showing size, spacing, and location, including special reinforcing required as determined by the design calculations but not shown on the Plans
3. Details of ducts for post-tensioning tendons showing size, type, and horizontal and vertical profiles
4. Details of duct supports, grout tubes, and vents showing size, type, and location
5. Details of the relative positions of reinforcing steel, ducts, and anchorages
6. Details of the anchorage systems for the proposed post-tensioning system
7. A table giving jacking sequence, jacking forces, and initial elongation of the tendons at each erection stage for post-tensioning
8. Details and a complete description of the post-tensioning system to be used for permanent tendons
9. Details of the prestressing, including:
   - Method, sequence, and procedure for prestressing and securing tendons
   - Procedure for releasing tendons
   - Equipment supplier and type
   - Tendon size and properties
   - Anchorage plates and assemblies
10. Information on grouting, including:
    - Grout mix design
    - Method of mixing and placing the grout
    - Type and capacity of grouting equipment
11. Working drawings and bar schedules for each prestressing system
12. Details of reinforcing or coil ties under anchorage plates
13. Details for usage of high-strength steel bar (furnished by the bar manufacturer)
14. Friction factors used in the prestressing system of deformed bars

As an option, shop drawings may be submitted on plan sheet sizes of 12” x 18” (305 mm x 457 mm) or 11” x 17” (279 mm x 432 mm) for review and approval. Information contained on these sheets must be legible.

After shop drawings have been approved, submit an electronic file that is compatible with Bentley Microstation J (Version 7) Cadd operating system, or an electronic file in Adobe Acrobat Portable Document Format (.pdf) to the Engineer. For bridges carrying railroads only, after shop drawings have been approved, submit one full size set of reproducible drawings to the Department.

G. Ram Calibration Charts

Before using rams in the work, furnish the Engineer with a certified chart from the calibration for each ram.

H. Designs and Details of Distribution Reinforcing Steel

The Department plans for anchorages show only a minimum amount of distribution reinforcing steel.

Design and detail the reinforcement needed to prevent bursting, peeling, and splitting. Submit the designs and details to the Engineer for review and approval.

I. Gauge Readings and Elongations

Keep a record of gauge pressures or readings and elongations at the end of each jacking operation and submit it to the Engineer for review and approval.

509.2 Materials

Ensure that materials meet the requirements of the following Specifications:

Material	Section
Steel Wire Strand	853
Structural Steel for Anchorage Devices, Distribution Plates, and Incidental Parts Required to Be of Steel	501
Grout	509.3.02.C
Cement	830
Admixtures	831
Water	880

Do not use strands from more than one source within the same tensioning operation.

Strands that differ in size from ASTM A 416 are to be submitted for prior approval.

High strength steel bars shall meet ASTM A 722 Type II, and S1 through S3 supplemental requirements and have manufacturers details for their use.

Ensure all bars within any member are of same grade.

Bar couplers and locations are to be approved prior to use and shall have tensile strength not less than manufacturers minimum for strength of bar.

Allow the Department 60 calendar days before installing prestressing steel to test the steel and approve the materials furnished.

Use the anchor devices and distribution plates recommended by the manufacturer of the prestressing system.

Have the Engineer approve grout for filling recesses or encasing anchoring devices. Use a type recommended by the manufacturer for highly stressed steel.

509.2.01 Delivery, Storage, and Handling

A. Protect Prestressing Steel

Protect prestressing steel against physical damage, rust, and corrosion..

Reject all damaged, rusted, or corroded prestressing steel. See Subsection 509.3.06, "Quality Acceptance."

B. Package Prestressing Steel

Package prestressing wire or strand in containers or shipping forms to protect steel from physical damage and corrosion during shipping and storage. Comply with these packaging requirements:

1. Place a corrosion inhibitor to protect against rust and corrosion as follows:
   a. Place the inhibitor in the package or form.
   b. Incorporate the inhibitor in a carrier-type packaging material.
   c. Apply the inhibitor directly to the steel.

   Ensure that the corrosion inhibitor does not damage the steel, grout, or bond strength of the steel to the grout.
2. Immediately replace or restore to original condition damaged packaging or forms.
3. Clearly mark the shipping package or form with the following:
   - A statement that the package contains high-strength prestressing steel
   - Handling instructions
   - The type, kind, and amount, of corrosion inhibitor used, including the date placed, safety orders, and instructions for use

C. Ducts

1. Place all prestressing steel tendons in openings or ducts.
2. Unless otherwise approved by the Engineer, use only rigid, galvanized, ferrous metal that is mortar tight for all longitudinal prestressing steel ducts.
3. Fabricate the ducts with an inside area that is at least double the effective area of the prestressing steel in the duct.
   a. Fabricate ducts that encase single high-strength prestressing steel bars with an inside diameter at least 3/8 in. (10 mm) larger than the diameter of the bar to be used.
   b. Use a minimum wall thickness of 0.030 in (0.75 mm).
4. Rigid ducts may be fabricated with either welded or interlocked seams. There is no need to galvanize the welded seam or the transition couplings that connect the ducts to anchoring devices.
5. Weld transition couplings to the anchor plate.
6. Pre-bend all ducts that must be curved to match the roadway alignment and/or tendon profile. Shape the ducts without crimping or flattening them.

509.3 Construction Requirements

509.3.01 Personnel

A. Representative of the Post-Tensioning System Supplier

If the Engineer requires, provide a representative of the post-tensioning system supplier at no additional cost to the Department.

Provide a representative who:

- Is skilled in using post-tensioning systems
- Supervises or provides surveillance of the work
- Provides information about the post-tensioning system to the Engineer as needed

509.3.02 Equipment

A. Prestressing Equipment

Provide the following equipment for construction and prestressing:

1. Tensioning Jacks

   Use tensioning jacks equipped with the following:

   - Long enough stroke to perform stressing in a minimum number of strokes
   - Provide a positive means of marking each elongation increment where two or more strokes are required
   - Ports or windows to exam and measure tendon movement
   - Slow stress release capability to allow the jack to relax from overstress to the proper seating force

2. Tensioning Equipment

   Use tension prestressing tendons equipped with the following:

   - Equipment that allows direct elongation measurement
   - Hydraulic ram that determines the tensioning force applied

     Measure the tensioning force applied by the ram using either of the following gauges:

   a. Gauge that measures either the internal hydraulic pressure in the ram or the force exerted by the ram

   b. Spring-type dynamometer used with the tensioning force applied directly

      Convert the readings from either of these gauges to actual tensioning forces using calibrated values from a calibration chart.

      Use gauges with a diameter of at least 6 in (150 mm) that allow accurate readings of load increments of one percent of the total capacity of the ram used, not to exceed two percent of the tensioning force used.

3. Load Cell

   Ensure that the range of the load cell does not use the lower 10 percent of the manufacturer's rated capacity to determine the jacking stress.

B. Sampling and Inspecting Prestressing Steel

The Department will identify, sample, test, and approve all prestressing steel as follows:

1. Identification

   a. Assign a lot number to all strand and all bars of each size from each mill heat shipped to the jobsite.

   b. Tag the lots so that each such lot can be positively identified at the job site.

   c. Assign and tag each lot of anchorage assemblies and bar couplers.

   d. The Engineer or Department inspector will reject all unidentified prestressing steel, couplers, or anchorage assemblies received at the site, and any items without positive identification.

2. Sampling

   a. Give to the Engineer samples from each size and each heat of prestressing bars and prestressing steel strand, and from each lot of anchorage assemblies and bar couplers.

   b. Submit with each sample of prestressing strand or bar the manufacturer's certification stating the minimum guaranteed ultimate tensile strength of the sample furnished.

c. Submit enough samples to make up two assembled test units from each heat, complete with end fittings and anchoring devices. Test units shall be at least 8 ft. (2.4 m) long.

d. If the Engineer's tests indicate the necessity of retests, submit twice the number of previous specimens without cost to the Department. Identify the samples by heat number.

e. Submit samples to the Engineer in ample time to allow for testing, tabulating results, and, in case of unsatisfactory findings, to call for and test substitute samples.

f. The Department will not pay the Contractor additional compensation because of the delay while waiting for approval of the material furnished for testing.

3. Tendon Modulus of Elasticity

a. Submit to the Engineer for approval the apparatus and test methods you propose to use to determine the modulus of elasticity.

b. Run bench tests on two samples of each size and type of longitudinal strand and/or wire tendon prior to stressing the initial tendon.

c. Stress the tendon at an anchor assembly with the dead end consisting of a load cell.

d. Apply 80 percent of the ultimate tension to the test specimen in 10 increments and record the gage pressure, elongation and load cell force for each increment..

e. Detension the test specimens back to 0 in 10 increments, and record the gage pressure, elongation, and load cell force for each increment.

f. Submit the test data to the Engineer.

g. Re-evaluate and correct, as necessary, the theoretical elongations shown on the post-tensioning working drawings based on the results of the tests.

h. Submit any revisions to the theoretical elongations to the Engineer.

i. After the initial testing, the Engineer may require five more tests. Space these tests evenly throughout the duration of the contract.

4. In-Place Friction Test

a. Submit to the Engineer for approval the apparatus and test methods you propose to use to measure the in-place friction.

b. After receiving approval for the apparatus and method, test the first draped continuity strand and/or wire tendon in place of each size and type.

c. Apply 80 percent of the ultimate tension to the test specimen in 10 increments and record gage pressure elongation and load cell force for each increment.

d. Detension the tendon back to 0 in 10 increments, and record the gage pressure, elongation, and load cell force for each increment.

NOTE: You only need to run one friction test for each type and size of a tendon for the Project.

e. Submit the results of the tests (loss due to friction and modulus of elasticity) to the Engineer.

C. Grouting Equipment

Use grouting equipment capable of the following:

- Continuously grouting the largest tendon on the Project in 20 minutes or less
- Pumping the mixed grout according to the requirements of this Specification

Provide the following grouting equipment:

- Mixer capable of continuous mechanical mixing and of producing a grout that is free of lumps and undispersed cement
- Accessory equipment that provides accurate solid and liquid measures to batch materials
- Positive displacement pump able to produce an outlet pressure of at least 150 psi (1 MPa) gauge
- Pump seals that do the following:
  - Keep oil, air, or other foreign substance out of the grout
  - Prevent loss of grout or water
- Pressure gauge with a maximum full scale reading of 300 psi (2 MPa) installed at some point in the grout line between the pump outlet and the duct inlet to establish grout pressure at the pump
- Standby flushing equipment capable of pumping at 300 psi (2 MPa) gauge and flushing out partially-grouted ducts
- A different power source for the flushing equipment than the grouting equipment
- Screen with 0.125 in (3 mm) maximum clear openings to screen the grout before it is introduced into the grout pump
- Hopper placed directly over the pump inlet

  Attach the hopper to the pump inlet using a gravity feed.

  Keep the hopper at least partially full of grout during the pumping operation to prevent air from being drawn into the post-tensioning duct.

D. Rams

Twenty days before using rams and their gauges or reading devices in the work, have them calibrated by an approved laboratory.

Recalibrate the equipment every three months during the work or when the Engineer observes erratic results. For each calibration, furnish a calibration chart, certified by the laboratory, to the Engineer.

The Engineer may extend the 3-month interval if there are no performance changes. However, recalibrate at least every 6 months.

509.3.03 Preparation

A. Test Tendon Modulus of Elasticity

To determine the tendon elongations while stressing, bench test two samples of each size and type of longitudinal strand and/or wire tendon using the following procedure:

1. Propose apparatus and methods used to perform these tests for approval by the Engineer.
2. Stress the tendon at an anchor assembly with the dead end consisting of a load cell.
3. Tension the specimen to 80% of ultimate in 10 increments.
4. Detension the specimen from 80% of ultimate to 0% in 10 increments.
5. Record the gage pressure, elongation, and load cell force for each increment. Provide this data for the Engineer.
6. Reevaluate the theoretical elongations shown on the post-tensioning working drawings using the results of the tests. Correct the results as necessary.
7. Submit revisions to the Engineer for approval.
8. Perform five more tests after the initial testing (if required by the Engineer). Space these tests evenly throughout the duration of the contract.

B. Test Friction

To accurately determine the friction loss in a strand and/or wire tendon, test, in place, the first draped continuity tendon of each size and type using the same procedure described for the modulus of elasticity test. Only one friction test for each type and size of a tendon is required for the project. Submit the results of the tests to the Engineer.

C. Test Anchorages

Before construction, test prestressing anchorage blocks of the type indicated in Figure 2 using the proposed jacking system as follows:

1. Construct and test anchorage test blocks for the following:
   - Each different radius of bend of the duct into the anchorage
   - Each different number of strands per duct arrangement
2. If anchorages (reinforcing, anchorage geometry, anchor plate, and duct bend radius) are the same within a Project or bridge, test only the anchorage with the largest jacking force.
3. Assemble a test block with these features:
   - Same concrete dimensions of the structure cross section at the points of anchorage in the proposed system
   - Tendon geometries, anchor plates, and anchorage reinforcing steel proposed for use in the structure
4. Place the tendons.
5. Stress the tendons to the full force required by the design using the proposed jacking system and stressing procedures.

Anchorages are acceptable to the Department if no concrete cracks wider than 1/100 in (0.25 mm) develop within 3 days under full force.

509.3.04 Fabrication

General Provisions 101 through 150.

509.3.05 Construction

A. Contractor Options

The Contractor may choose from these options when constructing the structure according to the Department plans:

1. Alternative Prestressing Systems

   The Contractor may use post-tensioning systems other than those shown on the Plans. The alternative system may use wires, bars, or strands anchored with friction grips or bearings.

   Unless the Plans allow, do not use prestressing systems that incorporate dead-end anchorages.

   Choose alternative systems that can be stressed from either end unless the construction staging does not allow room to stress tendons from both ends. In this case, use anchorage systems with compression plates or fittings to seat anchor wedges.
2. Alternative Stressing or Anchorage Blocks

   Stressing or anchorage blocks for the structure may deviate from those shown on the Plans.

   Alternate stressing or anchorage blocks must be located inside the box. Place the blocks in any of the following locations:
   - At the juncture of the bottom of the top slab
   - At the juncture of the top of the bottom slab and the web walls
   - Within fillet areas in reinforced stressing blocks
   - In partial depth diaphragms

Permanent or temporary stressing blockouts are allowed in the top of the top slab when post-tensioning ducts do not have a moisture-retaining low point.

B. Install the Ducts

Install ducts for prestressing steel as follows:

1. Support ducts at intervals of no more than 2 ft (600 mm).

   The horizontal tolerance for longitudinal ducts in the top or bottom slab is plus or minus 1 in (25 mm). The vertical tolerance for longitudinal ducts is plus or minus 1/4 in (6 mm).
2. Join rigid duct sections using positive metallic connections. Connect the sections carefully to prevent misaligning the ducts at the joints.
3. Use waterproof tape at the connections.
4. Make duct splices so that the nose of the tendon being pushed into the duct goes from a male end into a female end. This prevents tendons from catching on a duct end.
5. Stagger splices in ducts to prevent splices in the same location in a row of ducts. Stagger the splices to give a 3 ft (900 mm) longitudinal spacing from row to row.
6. Carefully cut and deburr the ends of ducts.
7. Use ducts or anchorage assemblies with pipes or other connections as grout ports for injecting grout after the prestressing. Ports are required at each tendon anchorage.
8. Place continuous-draped longitudinal ducts in the web in one vertical row at the center of the web.
9. Tie the ducts securely to the saddles, which shall hold the duct in position during concrete placement and hardening.
10. Ensure that the clear distance between the ducts is 1-1/2 times the maximum size aggregate in the concrete mix or 1 in (25 mm) whichever is greater.
11. Do not bundle ducts.
12. See Figure 3 below for an illustration of how to tie duct support saddles.
13. If needed, place ducts in the top or bottom slab in one of these ways:
    - Horizontally at the variable spacings
    - In closely and uniformly spaced groups

    The minimum horizontal clear spacing between ducts must be 3 in (75 mm).
14. Install at least one more continuity duct than needed in each web throughout the length of the structure. This duct will be used during blockage and excessive prestress losses during construction.
15. Position the ends of the additional ducts to use anchorage blocks if necessary.
16. Vent continuity ducts over each intermediate support.

    Provide vents with a diameter of at least 1/2 in (13 mm) and made of either steel or polyethylene.
17. Provide vents at the low point of every duct to drain off water in the duct.
18. Connect vents to ducts using approved metallic structural fasteners.
19. Ensure that the vents are:
    - Mortar tight
    - Taped as necessary
    - Sealable
    - Capable of allowing grout to be injected through them
20. Immediately before installing the prestressing steel, demonstrate to the Engineer that ducts are unobstructed and free of water and debris.

21. After installing ducts in the forms, keep the duct ends sealed to keep out water and debris.
22. After post-tensioning the steel, fill ducts with or without strands full of grout.
23. After the grout has set, remove the ends of the vents flush with the concrete surface.

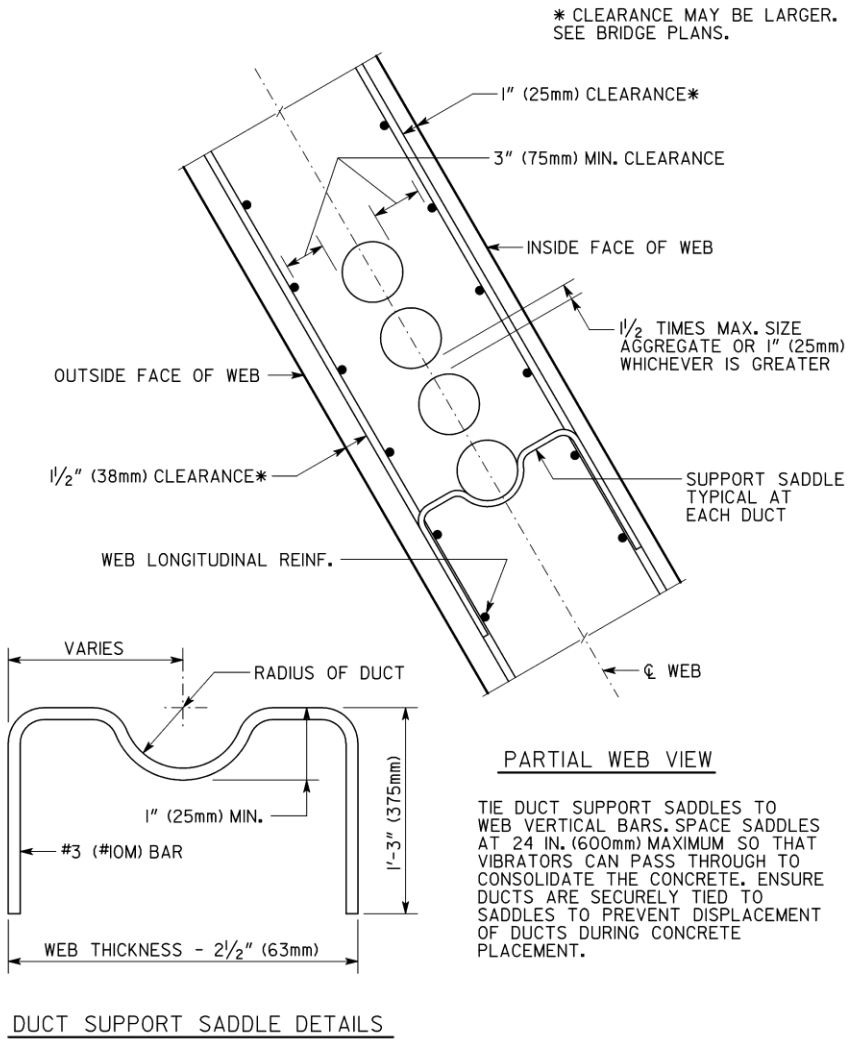

Figure 3: Partial Web View

C. Install Reinforcing Steel

Fabricate reinforcing steel and place it according to the Plans and Shop Drawings.

Do not cut and remove reinforcing steel to align stressing ducts properly. Replace bars that cannot be fabricated to clear the ducts with bars with an adequate lap length.

Where bars are extended by the use of couplers, the assembled units shall have a tensile strength of not less than the manufacturer's minimum guaranteed ultimate tensile strength of the bar.

Submit revised drawings indicating the proposed bar to the Engineer for review and approval.

D. Install Anchorages

Secure post-tensioned prestressing steel at the ends using permanent anchoring devices recommended by the prestressing steel manufacturer and meeting the requirements herein..

Use anchoring devices that hold the prestressing steel at a load producing a stress of at least 95 percent of the guaranteed minimum tensile strength of the prestressing steel.

E. Install Distribution Devices

Distribute the load from the anchoring device to the concrete using devices that conform to the following:

- The final unit compressive stress on the concrete directly underneath the plate or assembly does not exceed 3,000 psi (20 MPa) or 0.9 (f'ci), whichever is less.
- Bending stresses in the plates or assemblies induced by the pull of the prestressing steel do not exceed the yield point of the material or distort the anchorage plate as determined by the Engineer when 100 percent of the load is applied.

The Contractor may omit steel distribution plates or assemblies when furnishing large anchoring devices used with a steel grill embedded in concrete to distribute the compressive stresses to the concrete.

Install distribution devices as follows:

1. Place steel distribution plates, if used, inside the end surface of the member.
2. Recess anchoring devices so that the ends of the prestressing steel and all of the anchoring devices are embedded in concrete.
3. After post-tensioning and grouting the duct, clean foreign and loose material off the surfaces of the concrete.

   Do not clean the concrete until the duct grouting operations are complete.
4. Fill anchoring device recesses with an approved, non-shrink grout.
5. Cover the anchoring devices and ends of the prestressing steel with at least 2 in (50 mm) of grout, unless the Plans specify more.

F. Have the Engineer Inspect

Have the Engineer inspect and approve the placement of reinforcement, ducts, and anchorages before pouring concrete into the forms.

G. Pour the Concrete

Pour concrete according to Section 500.

H. Install the Tendons

Install tendons in the ducts after pouring the top deck or when the Engineer approves.

Before installing the tendons, demonstrate to the Engineer that the ducts are unobstructed and free of water.

Install the tendon in the duct as approved by the Engineer.

I. Follow Weld Restrictions

The Engineer will not allow welds or welding equipment grounds on the forms or near the prestressing steel after the steel has been installed.

J. Post-Tension the Tendons

Post-tension the tendons as follows:

1. Before post-tensioning tendons, ensure that the deck slab thickness and deck reinforcement cover comply with the Plan requirements.
2. Unless otherwise noted on the Plans or approved by the Engineer, wait to prestress cast-in-place concrete until the compressive strength of all the concrete placed reaches the required 28-day strength and the concrete is at least 14 days old.

   If the Engineer approves, the Contractor may apply a portion of the prestressing force to a member with a concrete strength less than the value shown on the Plans.

   Even with this partial prestressing, the Contractor must successfully construct the members.
3. Conduct the tensioning process so that the applied tension and the elongation can be measured.
4. Tension the prestressing steel using hydraulic jacks.
5. Tension the prestressing tendons in continuous post-tensioned members by jacking at each end of the tendon. Jacking of both ends does not need to be done simultaneously.
6. When approved by the Engineer and if shown on the Plans, tension bent cap tendons by jacking from one end only.
7. Tension the prestressing tendons in simple span post-tensioned members by jacking from one end only.
8. When tensioning from one end of the tendon only, tension half of the prestressing steel in each member from one end and the other half from the opposite end of the span unless otherwise shown on the Plans.
9. Unless allowed on the Plans, do not use prestressing systems that incorporate dead-end anchorages.
10. Where construction staging does not allow room to stress tendons from both sides, use anchorage systems with compression plates or fittings to seat anchor wedges.
11. Ensure that the prestressing steel force does not drop below the value shown on the Plans.
12. Ensure that the tendon force measured by gauge pressure is within 5 percent of the force calculated by elongation movement.
13. If the measured elongation at the jacking stress varies more than 5 percent from the theoretical elongation, or if the unbalanced force about the section center line exceeds 3 percent:
    a. Check the entire operation and determine the error.
    b. Correct the error to the Engineer’s satisfaction before proceeding with the work.
14. Do not allow the total force at each section to drop below the total prestressing force specified. However, the prestressing force may vary plus or minus 5 percent per tendon.
15. Unless otherwise specified on the Plans, ensure that the average working stress in the prestressing steel does not exceed 80 percent of the yield point stress of the prestressing steel.
16. To determine the amount of steel required, ensure that the maximum temporary tensile (jacking) stress in prestressing steel does not exceed 80 percent of its specified minimum ultimate tensile strength unless the Plans indicate a lower jacking stress.
17. Anchor the prestressing steel at stresses (initial stress) that will retain working forces at or higher than the minimum values shown on the Plans or approved by the Engineer.

    Do not allow the initial stress to exceed 70 percent of the specified minimum ultimate tensile strength of the prestressing steel.
18. Check that the loss of elongation from anchor set agrees with the anticipated value used in the stress calculations.
    a. Adjust measured Elongation to account for the actual measured anchor set.
    b. Maintain 5 percent agreement between the elongation and the stressing force.

19. To compute the prestress losses from friction, use the formula in the AASHTO Specifications for Highway Bridge, Article 9.16.1. The total friction losses at any section will be the sum of the effects for each tendon, depending on its anchorage location for each tendon.
20. To compute other prestress losses, use the AASHTO Specifications for Highway Bridge, Article 9.16.2.
21. After stressing and anchoring tendons and after the Engineer approves, trim projecting tendons by sawing as shown in the approved working drawings.

K. Mix the Grout

Grout for Prestressing Concrete Bridge Members: Grout for use with prestressing concrete bridge members includes a mixture of Portland cement, water, and an approved expansive admixture, as follows:

- Water—Use potable water or other water that meets the requirements of Subsection 880.2.01.
- Portland cement—Use Portland cement that meets the requirements of Subsection 830.2.01. Standard usage is Type II Portland cement, but the Engineer may allow Type I or III. The Engineer may require Type III for cold weather grouting.

  Submit to the Department certificates of compliance for the cements used. However, the Department reserves the right to sample and test the cement before its use and at any time during the work.
- Admixture—Use admixtures that meets the requirements of Subsection 831.2.02.A.

NOTE: Do not use sand in grout used for prestressing concrete bridge members.

1. Before grouting, select the material proportions based on the following:
   - Tests made on the grout
   - Documented experience with similar materials, equipment, and field conditions (weather, temperature, etc.).
2. Select admixtures used in Grout for Prestressing Concrete Members. If used and approved by the Engineer, use admixtures that demonstrates low water content, good flowability, and minimum bleed.

   You may use the following:
   - Either liquid or solid admixtures
   - Enough fine, aluminum powder to obtain 5 to 10 percent unrestrained expansion of the grout

   Do not use the following:
   - Thixotropic additives without prior approval from the Engineer
   - Admixtures that have ingredients corrosive to steel or chemicals in quantities that may have a harmful effect on cement
   - Admixtures with chloride ions in excess of 0.50 percent by weight of the admixture (assuming 1 lb (0.45 kg) of admixture per 94 lbs (42.6 kg) each of cement), florides, sulphites, and nitrates

   a. At least 30 days before using the admixture, submit to the Engineer at least 2 1/2 lbs (1 kg) of a proposed dry-type admixture, or 1 quart (1 L) of a proposed liquid-type admixture.

   b. Send with the sample a description of the content, recommended proportions to be used, and the manner and sequence of adding to the mix.
3. Ensure that the water content is the minimum necessary for proper placement and does not exceed a water-cement ratio of 0.45 (approximately 5 gal (19 L) of water per bag of cement).
4. Add the grout components to the mixer in the order listed or as required by the admixture manufacturer and mix the dry materials in a mixer or clean, tight box until the mixture is a uniform consistency:
   - Water
   - Portland cement

- Admixture

5. Mix the grout long enough to thoroughly blend it without excessively increasing the temperature or losing admixture expansion properties.
6. Agitate the grout continuously until it is pumped.
7. Do not add water to increase grout flowability that has decreased because grout use is delayed.

The Engineer may determine grout pumpability according to the ASTM C 939. When using this method, efflux time for the grout sample immediately after mixing must be at least 11 seconds.

L. Prepare Ducts for Grouting

Prepare the ducts for grouting by flushing the metal ducts as determined by the Engineer.

1. Use water to flush ducts that contains at least 0.1 lb/gal (10 g/L) of slaked lime (calcium hydroxide) or quicklime (calcium oxide).
2. Use oil-free compressed air to blow out ducts.

M. Grout the Duct

Bond prestressing steel to the concrete by filling the space between the duct and the tendon with grout.

Grout the duct as follows:

1. Open the grout and vent openings.
2. Ensure that the pumping pressure at the tendon inlet does not exceed 250 psi (2 MPa) gauge.
3. Allow grout to flow from the first vent after the inlet pipe to remove residual flushing water or entrapped air.
4. Once water or air is removed, cap or otherwise close the vent. Close the remaining vents in sequence in the same manner.
5. If the grouting pressure exceeds 250 psi (2 MPa) gauge, inject grout at a vent that has been or is ready to be capped.
   a. Maintain a one-way grout flow while injecting.
   b. Fit the vent used for injection with a positive shutoff.
   c. If a one-way flow of grout cannot be maintained, immediately flush the grout out of the duct with water.
6. Pump grout through the duct and waste it continuously at the outlet pipe until the following happens:
   - No visible slugs of water or air are ejected.
   - The efflux time of the ejected grout is at least 11 seconds.
7. To ensure that the duct remains filled with grout:
   a. Close the outlet.
   b. Hold pumping pressure for an additional 15 seconds and then close the inlet.
   c. Do not remove or open plugs, caps, or valves used to close off the outlet or inlet until the grout has set.

N. Place Rust Inhibitor

If prestressing and grouting are not completed within 10 consecutive days after installing steel strands in the ducts (or within 30 days in the case of bars), use rust inhibitor in the ducts.

Prestressing steel installed but not grouted within the specified number of consecutive days is subject to the limits in Subsection 509.3.06.C, “Rust Limits.” If the Engineer directs, remove rejected tendons at no cost to the Department.

Do not reuse prestressing steel that has been detensioned. Replace detensioned prestressing steel.

O. Paint Steel Parts

Paint steel parts exposed in the completed structure as follows:

1. Field clean the parts according to Subsection 535.3.03.A, "Clean New Steel Structures."
2. Field paint the parts according to System IV of Section 535.
3. Paint the ends of strands according to System IV of Section 535.

509.3.06 Quality Acceptance

A. For Prestressing Concrete Bridge Members

Use grout that has a minimum compressive strength of 3,000 psi (20 MPa) at 28 days, as determined by ASTM C 109.

B. Tendon Standards

Individual wires in a 7-wire strand or wires in a parallel wire tendon may fail if the total area of wire failure is not more than 2 percent of the total cross-sectional area of tendons in any member.

Failure of an entire strand will be subject to structural review.

C. Rust Limits

Prestressing steel will be rejected when:

- The opened package (pak) of prestressing steel has an even coating of rust or rust film over the entire pak.
- One or more wires in a strand are rusted throughout their length.
- A length of strand or bar contains clinging rust, pits, or other faults.

Prestressing steel will be accepted when:

- Rust film can be removed by light rubbing, leaving light streaks or spots but no pitting.
- Rust forms during the 10 consecutive days (or 30 consecutive days for bars) between the installation of steel in the ducts and the prestressing and grouting.

509.3.07 Contractor Warranty and Maintenance

General Provisions 101 through 150.

509.4 Measurement

Prestressing cast-in-place concrete is measured as an accepted lump quantity, complete in place.

The Contract Lump Sum price paid for prestressing cast-in-place concrete will be full compensation for the following:

- Furnishing labor, materials, tools, equipment, and incidentals
- Doing Work to furnish, place, and tension the prestressing steel in cast-in-place concrete structures complete in place and as specified on the Plans and in these Specifications

509.4.01 Limits

A. Tests

Tests performed by the Contractor will not be paid for separately but will be considered incidental to the project.

No additional payment will be made for testing prestressing anchorage blocks. Costs associated with performing the test, including materials, equipment, and labor, will be included in the bid price for prestressing.

B. Additional Compensation

No additional compensation will be made for the following:

- Furnishing and placing additional deformed bar reinforcing steel, ducts, anchoring devices, saddles, distribution plates or assemblies, and incidental parts
- Furnishing samples for testing
- Performing testing
- Grouting recesses
- Pressure grouting ducts

Full compensation will be included in the Contract Lump Sum price paid for prestressing cast-in-place concrete.

509.5 Payment

Payment will be made under:

Item No. 509	Prestressing cast-in-place concrete, Bridge No._____	Per lump sum

509.5.01 Adjustments

General Provisions 101 through 150.

Section 510—Protective Platforms

510.1 General Description

This work consists of furnishing materials, erecting, maintaining, removing, and disposing of protective platforms that provide additional safety for underpassing traffic during construction of grade separation structures.

510.1.01 Definitions

General Provisions 101 through 150.

510.1.02 Related References

General Provisions 101 through 150.

510.1.03 Submittals

A. Location of Vertical Clearance Signs

The Engineer will approve the exact location of vertical clearance signs.

510.2 Materials

General Provisions 101 through 150.

510.2.01 Delivery, Storage, and Handling

General Provisions 101 through 150.

510.3 Construction Requirements

510.3.01 Personnel

General Provisions 101 through 150.

510.3.02 Equipment

General Provisions 101 through 150.

510.3.03 Preparation

General Provisions 101 through 150.

510.3.04 Fabrication

General Provisions 101 through 150.

510.3.05 Construction

Construct and maintain the protective platform so that no object or liquid will fall from the bridge superstructure or the platform to the roadway below. This protection is the Contractor's liability and responsibility.

Place protective platforms under spans that pass over pedestrian or vehicular traffic lanes. Place the platforms immediately after setting the beams and before working on the span.

Place the platforms immediately after the beams are set and before performing other work on the span.

A. Meet Platform Specifications

Construct protective platforms to meet the following specifications:

1. Platforms shall extend at least 3 ft (1 m) beyond each side of the outside limits of the structure.
2. Platforms shall completely cover the length of the spans over the traveled ways.
3. Platforms shall maintain the minimum vertical clearance shown on the Plans over the traffic lanes.

B. Construct and Remove Protective Platforms

Construct and remove the platforms as follows:

1. Post W 12-2 signs stating "Low Clearance, (the dimension shown on the Plans)" in the following locations so traffic approaching the bridge site from both directions can see them.
   - Approximately 500 and 1,000 ft (150 and 300 m) from each side of the bridge
   - On the exterior sides of the bridge superstructure
2. Construct the protective platforms to meet the specifications listed in Subsection 510.3.05.A, "Meet Platform Specifications" and follow these requirements:
   a. Keep protective platforms in place until all superstructure work, including painting, final rubbing, and clean-up, is complete.
   b. If the platforms fail to provide the required protection, stop operations on the spans affected and take remedial action. Do not begin operations again until the platforms are repaired.
3. Remove the protective platforms and the W 12-2 signs.

   The platforms remain the Contractor's property.

C. Consider Other Protective Platforms

The following may be considered satisfactory protective platforms under the following conditions:

1. **Stay-in-Place Metal Deck Forms.** Stay-in-place metal deck forms are satisfactory protective platforms between girders.

   Below the deck-form elevation, however, protective platforms are required for edge beam, diaphragm, or other construction.
2. **Precast, Prestressed Concrete Deck Panels.** Precast, prestressed concrete deck panels are satisfactory protective platforms under the same conditions as stay-in-place metal deck forms.
3. **Overhang Brackets.** Overhang brackets are satisfactory protective platforms under the following conditions:

a. The brackets are floored at least 12 in (300 mm) beyond the outside edge of a slab with a handrail.
b. The brackets have a 8 in (200 mm) curb board.
c. The Contractor uses temporary mobile or hanging protective platforms when erecting and removing the overhang from the work.

510.3.06 Quality Acceptance

A. Enforcing Compliance

If the Contractor fails to comply with the requirements in this Specification, the Engineer will shut down the Contractor's operations. The Engineer may also withhold any monies until these requirements are met.

510.3.07 Contractor Warranty and Maintenance

General Provisions 101 through 150.

510.4 Measurement

This work is not measured separately for payment.

510.4.01 Limits

General Provisions 101 through 150.

510.5 Payment

The cost of protective platforms will be included in the overall bid submitted. This price includes furnishing materials and erecting, maintaining, removing, and disposing of the platforms.

510.5.01 Adjustments

General Provisions 101 through 150.

Section 511—Reinforcement Steel

511.1 General Description

This work consists of furnishing and placing bar reinforcement steel and superstructure reinforcement steel.

511.1.01 Definitions

General Provisions 101 through 150.

511.1.02 Related References

A. Standard Specifications

Section 853—Reinforcement and Tensioning Steel

B. Referenced Documents

QPL 12

QPL 19

ASTM A 615/A 615M

ASTM A 153/A 153 M

ASTM D 570

ASTM D 1248

Manual of Standard Practice prepared by the Concrete Reinforcing Steel Institute and the Western Concrete Reinforcing Steel Institute

511.1.03 Submittals

A. Mill Orders and Shipping Statements

Furnish three copies of mill orders and shipping statements for fabricated reinforcement steel bars, both black and epoxy, to the Office of Materials. The purchase orders shall include the following:

- Complete State Project number, including the name(s) of the county(ies)
- Company name and order number of the Contractor
- Name and address of the fabricator
- Bar sizes and total weight

B. Bar Lists and Calculated Weights

Furnish the Engineer with copies of the fabricator's bar lists and calculated weights. The Engineer will compare these copies to the Plan quantity.

511.2 Materials

A. Bar Supports Requirements

Bar reinforcement shall meet the requirements of the following Specification, unless specified otherwise on the Plans or in the Special Provisions. For a list of bar support sources, see QPL 19.

Material	Section
Steel Bars for Concrete Reinforcement	853.2.01

1. Wire Supports

   Make wire bar supports from one of the following materials:

   a. Galvanized Wire: Use cold-drawn wire that is hot-dipped and zinc-coated to meet the requirements of ASTM A 153/A 153 M, Table 1, Class D, Weights of Zinc Coatings.

   b. Stainless Wire

      1) For nominal heights of 3-1/2 in (90 mm) and under, the legs may be fabricated from cold-drawn, weldable, stainless steel wire containing at least 16 percent chromium.

         - Ensure that the wire provides a minimum tensile strength of 85,000 psi (585 MPa) for bolsters and of 100,000 psi (690 MPa) for high chairs.

      2) For nominal heights exceeding 3-1/2 in (90 mm), the legs may be fabricated from cold-drawn, carbon steel wire (non-stainless steel) with stainless steel extensions attached to the bottom of each leg.

   c. Bright Basic Wire: You may use bright basic wire (no corrosion protection) for any support placed at least 3/4 in (20 mm) clear from a formed surface. Use the same wire sizes as that specified for galvanized wire in Subsection 511.2.A.1.a, "Galvanized Wire" above.

   d. Plastic Protected: For bar supports that come in contact with a removable form, use cold-drawn, carbon steel wire. Protect the wire with plastic and use only in these types of bar support configurations: SB, BB, JC, HC, BC, and CHC (see)

      1) If using Plastisol for dipping, ensure that it meets the following criteria:

         - Tensile strength: 1,500 to 2,000 psi (10 to 13.5 MPa)
         - Shore A hardness: 80 to 100 durometers

      2) If molding plastic legs of polyethylene to the top wire, use polyethylene that meets ASTM D 1248.

e. Epoxy Powder Coated Wire: Use epoxy powder that has satisfactory flexibility, adhesion, and does not conduct electrical current.

f. Plastic Supports: Plastic bar supports may be fabricated from virgin or recycled plastic. Supports shall be molded into a configuration that does not restrict concrete flow and consolidation around and under the supports. The supports shall be able to withstand a load of 300 lbs. (660 kg) without exhibiting any breakage or visible deformation. When tested according to ASTM D 570, the water absorption shall not exceed 0.1%.

g. Mortar Blocks: Precast mortar blocks used as spacers and supports shall be made of cement and concrete sand with a 1:2 cement-sand ration and shall have wires cast into them for fastening to the steel. Support faces shall be approximately parallel and smooth. The blocks shall be moist cured for a minimum of three (3) days.

2. Tie Wire

Use at least No. 16 gauge, black, soft iron wire to tie bar reinforcement steel.

B. Fabrication

Comply with the following requirements:

1. **Bar Supports**. Fabricate all wire bar supports as per the illustrations given in Table 1.

a. Stainless Wire

For nominal heights exceeding 3.5 in (90 mm), attach stainless steel extensions to the bottom of each leg. Design the leg extensions so that no portion of the carbon steel wire will be unprotected closer than 3/4 in (20 mm) from the form surface.

b. Plastic Protected

Apply plastic protection by dipping the bar support in plastic or by molding legs to the top wire.

1) Apply a plastic coat at least 3/32 in (2.4 mm) thick at points of contact with the form.

2) Extend the plastic upward on the wire to a point at least 1/2 in (13 mm) above the form.

3) Turn up all legs on wire bar supports at least 1/8 in (3 mm).

c. Epoxy Powder Coated Wire

Apply an epoxy powder coat at least 0.006 in (0.15 mm) thick.

Table 1—Bar Support Designation Requirements

Symbol	Bar Support Illustration	Type of Support	Nominal Height	Minimum Wire Sizes (Type of Steel)				Remarks
				Carbon			Stainless	
				Top	Legs	Runner	Legs	
SB	*	Slab Bolster	All	No. 4 Corrugated	No. 6	Ñ	No. 8	Legs spaced 5 in (125 mm) on center. Vertical corrugations spaced 1 in (25 mm) on center.**
SBU	*	Slab Bolster Upper	All	No. 4 Corrugated	No. 6	No. 7		Same as SB
BB	*	Beam Bolster	Up to 1 ½ (40 mm) incl.	No. 7	No. 7		No. 9	Legs spaced 2 ½ in (63 mm) on center.**
			Over 1 ½ – 2 in (40 - 50 mm) incl.	No. 7	No. 7		No. 8	
			Over 2 – 3 ½ in (50 - 90 mm) incl.	No. 4	No. 4		No. 7	
			Over 3 ½ in (90 mm)	No. 4	No. 4		-	
BBU	*	Beam Bolster Upper	Up to 2 in (50 mm) incl.	No. 7	No. 7	No. 7	-	Same as BB.
			Over 2 in 50 mm	No. 4	No. 4	No. 4	No. 4	
BC	*	Individual Bar Chair	All		No. 7		No. 9	--**.
JC	*	Joist Chair	All	Ñ	No. 6	Ñ	No. 9	--**.
HC	*	Individual High Chair	Up to 3 ½ in (90 mm) incl.	Ñ	No. 4	Ñ	No. 7	Legs at 20 degrees or less with vert. When height exceeds 12 in (300 mm) legs are reinf. with welded crosswires or encircling wires.***
			Over 3 ½ - 5 in (90 - 125 mm) incl.	Ñ	No. 4	Ñ	-	
			Over 5 – 9 in (125 - 225 mm) incl.	Ñ	No. 2	Ñ	-	
			Over 9 in (225 mm)	Ñ	No. 0	Ñ	-	
HCM	*	High Chair for Metal Deck	2 – 5 in (50 - 125 mm) incl.	Ñ	No. 4	Ñ	-	Sane as HC. The longest leg will govern the size of wire to be used.***
			Over 5 – 9 in (125 - 225 mm) incl.	Ñ		Ñ	-	
			Over 9 in (225 mm)	Ñ		Ñ	-	
CHC	*	Continuous High Chair	2 – 3 ½ (50 - 90 mm) incl.	No. 2	No. 4	Ñ	No. 7	Legs at 20 deg. or less with vert. All legs 8 ¼ in (206 mm) on center max., with leg within 4 in (100 mm) of end of chair, and spread between legs not less than 50% nominal height.
			Over 3 ½ - 5 in (90 - 125 mm) incl.	No. 2	No. 4	Ñ-	-	
			Over 5 – 9 in (125 - 225 mm) incl.	No. 2	No. 2	Ñ	-	
			Over 9 in (225 mm)	No. 2	No. 0	Ñ	-	

CHCU	*	Continuous High Chair Upper	2 – 5 in (50 - 125 mm) incl. Over 5 – 9 in (125 - 225 mm) incl. Over 9 in (225 mm)	No. 2 No. 2 No. 2	No. 4 No. 2 No. 0	No. 4 No. 4 No. 4	- - -	
CHCM	*	Continuous High Chair for Metal Deck	Up to 2 in (50 mm) incl. Up to 2 in (50 mm) incl. Over 2 – 5 in (50 - 125 mm) incl.	No. 4 No. 2 No. 2	No. 6 No. 4 No. 4	No. 4 No. 4 No. 4		No. 4 top wire: maximum leg spacing 5 in (125 mm) on center. No. 2 top wire: maximum is 10 in (250 mm) on center.****
UJC	*	Upper Joist Chair	-1 to + 3 ½ in (-25 to +90 mm) incl. (measured from form to top of middle portion of saddle bar) in ¼ in (6 mm) increments	No. 13 Bar or 1/2 in (13 mm)	No. 2	Ñ	-	Legs spaced 14 in (350 mm) on center.
CS	*	Continuous Support	1 ½ - 5 in (40 - 125 mm) incl. Over 5 – 7 ½ in (125 - 190 mm) incl. Over 7 ½ - 12 in (190 - 300 mm) incl.	No. 8 No. 6 No. 4	No. 8 No. 6 No. 4	No. 8 No. 6 No. 4	-	Legs spaced 6 in (150 mm) on center, 4 in (100 mm) on center at bend point. Middle runner used with heights over 7 in (175 mm). "Zig Zag" width: 8 in (200 mm) min.

If the top wire on continuous supports are not designated as corrugated, the Manufacturer may use either straight or corrugated wire.

* Refer to the Manual of Standard Practice prepared by the Concrete Reinforcing Steel Institute and the Western Concrete Reinforcing Steel Institute for bar support illustrations.

** To provide adequate stability against overturning, make the leg spread measured between points of support on the minor axis of the support at least 70 percent of the nominal height.

*** To provide adequate stability against overturning, make the leg spread measured between points of support on the minor axis of the support at least 55 percent of the nominal height.

**** To provide adequate stability against overturning and to provide adequate load capacity, make the leg spread measured between points of support on the minor axis of the support be between the minimum and maximum percentages of the nominal height, as shown:

Nominal Height, in. (mm)	Distance Between Supports, % of Nominal Height	
	Minimum	**Maximum**
Under 4 in (100)	70	No limit
4 in (100)	70	95
6 in (150)	65	90
8 in (200)	**60**	85
10 in (250)	**55**	80
12 in (300)	**50**	75
Over 12 in (300)	**50**	**75**

2. **Reinforcement Steel.** Fabricate reinforcement steel bars in the planes they were designed for and to the tolerances specified in the Fabrication Tolerances illustration (Figure 1).

   Bar dimensions shown on the Plans are out-to-out unless otherwise noted on the Plans.

   The maximum allowable deviations out of the design plane are as follows:

Bar Size	Allowable Deviation
No. 7 (22 m) bars and under	1/2 in (13 mm)
No. 8 (25 m) bars and over	1 in (25 mm)

   Bend the reinforcement steel to the shapes and dimensions specified on the Plans. Do not rebend and use bars that have been rejected.

   Hooks and bends shall comply with the Manual of Standard Practice, prepared by the Concrete Reinforcing Steel Institute and the Western Concrete Reinforcing Steel Institute, unless otherwise shown on the Plans.

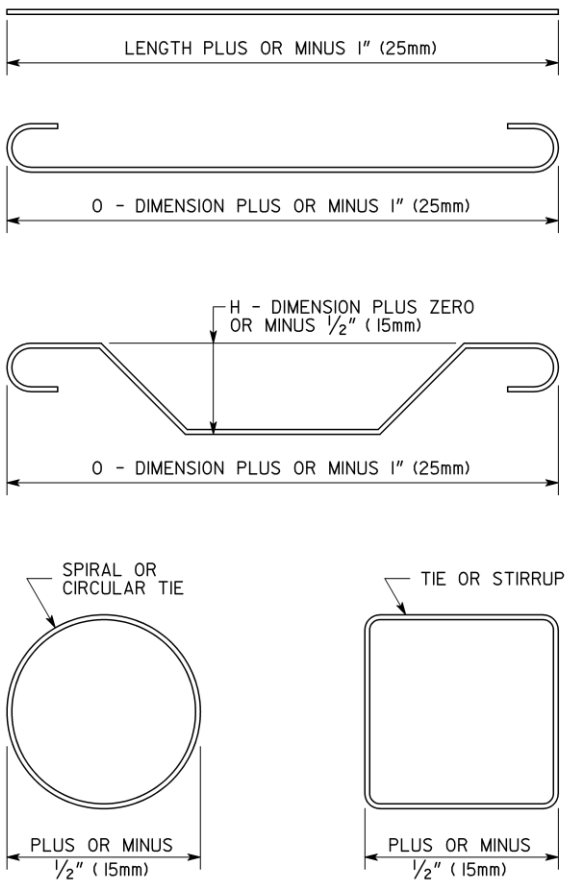

Figure 1 – Fabrication Tolerances

C. Acceptance

1. Plastic Protected Bar Supports

   If using Plastisol, test the tensile strength of 1,500 to 2,000 psi (10 to 13.5 MPa) and the Shore A hardness of 80 to 100 durometers.

   a. Test the insolubility of the Plastisol by immersing it in methyl-ethyl-ketone (MEK commercial grade 100 percent solution) for one hour.

b. Use the "Performance Test Procedure for Plastic Protected Bar Supports" in the CRSI Manual of Standard Practices. Ensure that the plastic does not deform permanently when heated to 170 °F (77 °C).

c. Reject any material that shows metal exposed at points of contact after being heated.

d. Reject any material that shatters or severely cracks under an impact loading subjected at 5 °F (–15 °C). Reject any plastic on the fabricated unit that chips, cracks, or peels under ordinary job conditions.

D. Materials Warranty

General Provisions 101 through 150.

511.2.01 Delivery, Storage, and Handling

After reinforcement steel is fabricated by one of the steel fabricators listed on QPL 12, handle and store it as follows:

- Load, transport, unload, and handle reinforcement steel in a way that prevents damage.
- Block unloaded reinforcement steel off the ground and store it in piles separated by size and type.
- Protect reinforcement steel from the weather if prolonged exposure is expected and the Engineer requires the protection.

511.3 Construction Requirements

511.3.01 Personnel

General Provisions 101 through 150.

511.3.02 Equipment

General Provisions 101 through 150.

511.3.03 Preparation

Before placing reinforcement, clean off loose mill scale, rust scale, and coatings that will destroy or materially reduce the bond.

511.3.04 Fabrication

See Subsection 511.2.B, "Fabrication" and Subsection 853.2.01.B, "Fabrication."

511.3.05 Construction

Bar schedules are shown on the Plans as a service. The Contractor is responsible for conforming to the Plan details. If there is a discrepancy between Plan details and bar schedules, the Plan details take precedence.

Space reinforcement steel within permissible tolerances. Tie and support the reinforcement steel so it cannot move during concrete placement.

Twist bar ties at least two full turns. The Engineer may require double bar ties if single bar ties do not keep the bar reinforcing steel secure under construction traffic.

Tie epoxy-coated reinforcement steel with the epoxy-coated or plastic-coated tie wire specified in Section 853.

Use the following placing requirements:

A. Footing Reinforcement Steel

1. **Footing Ties.** Tie mat steel at each intersection on the outer edges and at alternate intersections within the mat.
2. **Footing Steel Support.** Support mat steel using precast blocks with the maximum dimensions of 4 in x 4 in (100 mm x 100 mm) Plan clearance. Fasten the precast blocks with cast-in wires.

   Steel may be supported by other satisfactory means approved by the Engineer. Do not use rocks or random pieces of broken concrete to support steel.

3. **Footing Steel Tolerances.** Place mat steel within 1/2 in (15 mm) vertically from the bottom clearance and 1 in (25 mm) from the side clearance. Do not deviate more than 1 in (25 mm) from the location indicated on the Plans as seen in the Plan view.

B. Column and Wall Dowel Bars

1. **Dowel Bar Position.** Position dowel bars so the column bars or vertical wall bars can be spliced and tied in the location the Plan specifies.
2. **Dowel Bar Support.** Before pouring concrete in any footing, do the following:
   a. Place dowel bars.
   b. Construct a rigid template across the top of the footing to support the dowel bars.
   c. Attach dowel bars to the template so they cannot move during concrete placement.
   d. Do not push dowel bars into wet concrete after placing the concrete.
3. **Dowel Bar Tolerances.** Place dowel bars within 1/2 in (15 mm) of Plan location. Do not deviate more than 1/4 in (6 mm) on the side clearance.

C. Column Reinforcement Steel

1. **Column Steel Support.** Space steel off side forms using precast blocks with maximum dimensions of 2 in x 2 in x Plan clearance (50 mm x 50 mm). Fasten the blocks with cast-in wires.
2. **Vertical Bar Tolerances.** Place vertical bars within 1/2 in (15 mm) of the location indicated on the Plan. Do not deviate more than 1/4 in (5 mm) on the side form clearance.
3. **Hoop Tolerances.** Place hoops within 1 in (25 mm) of specified locations. Do not deviate more than 1/4 in (6 mm) on the side form clearance.
4. **Hoop Ties.** Tie hoops as follows:
   a. Tie hoops at intersections with dowel bars and corner vertical bars.
   b. Tie other vertical bars to at least every third hoop on a staggered basis, both vertically and horizontally.

D. Wall Reinforcement Steel

1. **Wall Steel Support.** Space steel and mat supports as follows:
   a. Space steel off side forms using precast blocks with maximum dimensions of 2 in x 2 in x Plan clearance (50 mm x 50 mm). Fasten the blocks with cast-in wires.
   b. Space mat steel using satisfactory spacing devices approved by the Engineer between wall mats. Ensure that the spacing devices provide enough space between steel mats according to the Plans.
2. **Wall Bar Tolerances.** Space wall bars within 1 in (25 mm) for any bar. Do not allow the tolerance to accumulate causing an omission of bars. Do not deviate more than 1/4 in (6 mm) on the side form clearance.

   Shift bars more than the tolerance only when necessary to clear a fixture. Do not reduce the number of bars specified for the pour. Place any remaining bars on either side of the fixture to the spacing specified on the Plans and to the tolerance specified in the previous paragraph.
3. **Wall Ties.** Tie wall steel as follows:
   a. Tie steel at each intersection on the outer edges and at every third intersection within the mat.
   b. For large walls, tie steel at alternate intersections or at each intersection, if necessary.
   c. Check for bar displacement after the initial tying and correct it before pouring concrete.

E. Beam and Cap Reinforcement Steel

1. **Beam and Cap Steel Support.** Support beam and cap steel as follows:
   a. Space upper main longitudinal steel (located below the top bars) vertically using precast blocks with maximum dimensions of 2 in x 2 in x Plan clearance (50 mm x 50 mm). Fasten the blocks with cast-in wires.

b. Maintain side form clearance using precast blocks with maximum dimensions of 2 in x 2 in x Plan clearance (50 mm x 50 mm). Fasten the blocks with cast-in wires.

c. Maintain bottom clearances using approved beam bolsters (see symbol "BB" on the Table of Bar Support Designation Requirements (Table 1).

d. Support additional layers of main longitudinal bottom steel in beams and caps that are not bundled from the lower layers with upper beam bolsters placed directly over lower supports. Refer to symbol "SBU" on the Table of Bar Support Designation Requirements (Table 1).

e. Space beam bolsters no more than 2 ft (600 mm) from the end of a beam or cap. Additional bolsters will be required at a maximum spacing of 4 ft (1.2 m).

2. **Beam and Cap Steel Tolerances.** Place the bottom and top clearance of a layer of main longitudinal steel within 1/4 in (6 mm) of the Plan vertical dimension for that layer. Do not deviate more than 1/2 in (15 mm) on side form clearance.

   Place each stirrup within 1 in (25 mm) of its specified location.

   If transverse spacing is not specified on the Plans, ensure that the main steel in beams and in tops and bottom of caps has at least 2 in (50 mm) horizontal clearance between bars.

3. **Beam and Cap Steel Ties.** Tie beam and cap steel as follows:

   a. Tie intersecting bars.

   b. Ensure that ties on bundled bars are spaced no more than 6ft (1.8 m) apart.

   c. Ensure that bundled bars have at least three ties per bundle.

F. Box Culvert Slabs

1. **Box Culvert Slab Support.** Support box culvert slabs as follows:

   a. **Support walls.** Place steel supports according to the requirements for walls in Subsection 511.3.05.D, "Wall Reinforcement Steel."

   b. **Support bottom slabs.** Place supports for single mat steel or for bottom mat steel according to the requirements for footings in Subsection 511.3.05.A, "Footing Reinforcement Steel."

      If more than one mat of steel is required by the Plans, support the top mat from the bottom mat using upper beam bolsters (SBU) or other satisfactory means approved by the Engineer.

   c. **Support top slabs.** Support the top mat steel of top slabs using either of the following:

      - Continuous high chairs placed near each end of the top bends of truss bars. Refer to symbol "CHC" on the Table of Bar Support Designation Requirements (Table 1).
      - Individual high chairs at a maximum longitudinal spacing of 4 ft (1.2 m). Refer to symbol "HC" on the Table of Bar Support Designation Requirements (Table 1).

      Support the bottom mat steel of top slabs as follows:

      1) Use slab bolsters spaced approximately 12 in (300 mm) from the inside faces of walls. Refer to symbol "SB" on the Table of Bar Support Designation Requirements (Table 1)

      2) Additional bolsters will be required along the length of the slab at a maximum spacing of approximately 4 ft (1.2 m) to maintain the bottom clearance.

      3) The Contractor may support bottom mats using precast blocks spaced approximately 4 ft (1.2 m) (maximum) in any direction.

         Blocks shall have maximum dimensions of 2 in x 2 in x Plan clearance (50 mm x 50 mm). Fasten the blocks with cast-in wires.

         If the Engineer determines that precast blocks do not provide proper support and maintain bottom clearances, use slab bolsters. Refer to symbol "SB" on the Table of Bar Support Designation Requirements (Table 1).

2. **Box Culvert Slab Tolerances.** Place bar reinforcing steel in the walls according to the tolerance requirements in Subsection 511.3.05.D.2, "Wall Bar Tolerances."

Place top and bottom slab reinforcing bar mats according to the tolerances specified in Subsection 511.3.05.G.6, "Bridge Deck Slab Tolerances."

3. **Box Culvert Slab Ties.** For top and bottom slabs, tie the reinforcing steel in each layer at the following locations:
   - Each intersection on the outer edges
   - Every third intersection within the mat

G. Bridge Deck Slabs

1. **Bridge Deck Slab Bottom Mat Support—Slab Bolsters.** Support bridge deck slab bottom mat reinforcing with slab bolsters as follows:
   a. Use lines of longitudinal slab bolsters. Refer to symbol "SB" on the Table of Bar Support Designation Requirements (Table 1).
   b. Ensure that slab bolsters that contact the forms are corrosion resistant.
   c. Place slab bolsters along both sides of each beam approximately 6 in (150 mm) to 12 in (300 mm) from the beam edges.
   d. If the spacing between the lines of bolsters exceeds 4 ft (1.2 m), place an additional row or rows of bolsters parallel to and in between the lines of bolsters so the maximum spacing between the lines of bolsters does not exceed 4 ft (1.2 m).
   e. If the reinforcement extends 12 in (300 mm) or more past bolsters on curb or median overhangs, place an additional row of bolsters approximately 4 in (100 mm) from the end of the reinforcement.
   f. On skewed bridges where main (transverse) deck steel is not placed parallel to skew, support discontinuous ends of cutoff transverse bars using slab bolsters. Refer to symbol "SB" on the Table of Bar Support Designation Requirements (Table 1). Place bolsters parallel to skew and as close to the cut ends of bars as possible.
2. **Bridge Deck Slab Bottom Mat Support—Precast Blocks.** The Contractor may support bottom mat reinforcing in the panels between beams using precast blocks instead of slab bolsters as follows:
   a. Use precast blocks with maximum dimensions of 2 in x 2 in x Plan clearance (50 mm x 50 mm).
   b. Fasten the blocks with cast-in wires.
   c. Space the blocks a maximum of 3 ft (1 m) longitudinally.
   d. Space the blocks transversely according to the requirements for slab bolsters described in Subsection 511.3.05.G.1, "Bridge Deck Slab Bottom Mat Support—Slab Bolsters," steps c, d, and e.
   e. If precast blocks do not adequately support the reinforcing steel, use slab bolsters. Refer to symbol "SB" on the Table of Bar Support Designation Requirements (Table 1).
3. **Bridge Deck Slab Top Mat Support Using Continuous High Chairs**

   Support top mat reinforcing steel with continuous high chairs as follows, except as noted in Alternate 1 and Alternate 2. Refer to symbol "CHC" on the Table of Bar Support Designation Requirements (Table 1).
   a. Use a line of longitudinal continuous high chairs. Refer to symbol "CHC" on the Table of Bar Support Designation Requirements (Table 1).
   b. Place the continuous high chairs 6 in (150 mm) from the edge along both sides of each beam.
   c. Place another line of continuous high chairs 6 in (150 mm) from each outside edge of the slab.
   d. If the spacing between the lines of continuous high chairs exceeds 4 ft (1.2 m), place an additional row or rows of continuous high chairs so the maximum spacing between the lines of continuous high chairs does not exceed 4 ft (1.2 m). Refer to symbol "CHC" on the Table of Bar Support Designation Requirements (Table 1).
4. **Bridge Deck Slab Top Mat Support Using Alternate 1.** When truss bars are used for main slab transverse reinforcing, support top mat steel using individual high chairs as follows:
   a. Place individual high chairs in a line 6 in (150 mm) from the edges along both sides of each beam. Refer to symbol "HC" on the Table of Bar Support Designation Requirements (Table 1).
   b. Place another line 6 in (150 mm) from each outside edge of the slab.

   Maximum spacing for individual high chairs is 3 ft (1 m) longitudinally and 4 ft (1.2 m) transversely.

5. **Bridge Deck Slab Top Mat Support Using Alternate 2.** When truss bars are not used for main slab transverse einforcing, support top mat steel using continuous high chairs upper as follows:
   a. Place lines of longitudinal continuous high chairs upper, directly over the lines of longitudinal slab bolsters that support the bottom mat steel. Refer to symbols “CHCU” and “SB” on the Table of Bar Support Designation Requirements (Table 1).
   b. On skewed bridges where main (transverse) deck steel is not placed parallel to skew, support discontinuous ends of cutoff transverse bars using continuous high chairs (CHC) placed parallel to skew as close to the cut ends of bars as possible.
   c. On bridges skewed less than 75 degrees, place an additional No. 5 (16M) bar parallel to the skew for the full deck width and as close as possible to the deck joint. Securely tie this bar to the following to maintain correct bar mat location:
      - The underside of the top mat of reinforcing steel
      - The forms
      - The supports (beams)
      - Both forms and supports (beams)
   d. When using prestressed concrete deck panels, securely tie the top mat of bar reinforcing steel to each shear bar and pick-up loop in the panels. This keeps the top bar reinforcing mat in the correct vertical position.
6. **Bridge Deck Slab Tolerances.** Bridge deck slab tolerances are as follows:
   a. **Top and Bottom Mat.** Top and bottom clearances for reinforcement steel mats shall be within 1/4 in (6 mm) of the dimension shown on the Plans.

      Do not deviate horizontal spacing or end and edge clearances of the mats more than 1/ 2 in (15 mm) from the spacing shown on the Plans.
   b. **Curb and Sidewalk Bar.** Place curb and sidewalk bars within 1/2 in (15 mm) in all directions of the Plan dimension.
   c. **Truss Bar.** If using truss bars in the bridge deck, raise the bar to meet the top clearance specified on the Plans. Do not deviate from the bottom clearance specified on the Plans.
7. **Bridge Deck Slab Bottom Mat Ties.** Tie reinforcing steel as follows:
   a. Tie the steel at each intersection of the outer edges and every third intersection within the mat unless the steel is coated with epoxy.
   b. Tie epoxy-coated reinforcing steel at every other intersection within the mat.
8. **Bridge Deck Slab Top Mat Ties.** Tie reinforcing steel as follows:
   a. Tie the steel at each intersection on the outer edges and every other intersection within the mat unless the steel is coated with epoxy.
   b. Tie epoxy-coated reinforcing steel at every intersection.

H. Reinforcement Steel Splices

Furnish reinforcement steel in the full lengths shown on Plans. Splice as shown on the Plans. Do not make other splices unless approved by the Engineer.

Place bars in continuous contact on lapped splices. Wire the bars together to maintain a clearance not less than the minimum clear distance to other bars and to the surface of the concrete.

Splice length shall be at least 12 in (300 mm) on No. 4 (13M) longitudinal bars for cast-in-place box culverts, unless indicated otherwise on the Plans.

I. Reinforcement Steel Welds

Weld reinforcement steel only where shown on Plans.

J. Minimum Steel Spacing Requirements

The minimum spacing limitations are as follows unless shown otherwise on the Plans

Clear Distance Between Parallel Bars (Shall be at least the largest measurement listed)	
Cast-in-Place Concrete	**Precast Concrete Manufactured Under Plant Control Conditions**
1.5 bar diameters	1 bar diameter
1.5 times the maximum size of the coarse aggregate	1-1/3 times the maximum size of the coarse aggregate
1-1/2 in (40 mm)	1 in (25 mm)

511.3.06 Quality Acceptance

Place reinforcement steel and have it inspected and approved by the Engineer before placing concrete.

If this requirement is violated, the Engineer may reject the concrete and require the Contractor to remove it.

511.3.07 Contractor Warranty and Maintenance

General Provisions 101 through 150.

511.4 Measurement

This work is measured for payment as an accepted lump quantity or in pounds (kilograms) of accepted bar reinforcement steel, whichever is shown on the Plans. The Department reserves the right to revise bar reinforcement steel quantities to correct errors and reflect changes on the Plans.

- Payment Per Lump Sum

  The quantity of bar reinforcing steel measured for payment per Lump Sum basis shall conform to the Plan details and will include reinforcement in concrete handrailings, concrete parapets, and barriers.

- Payment Per Pound (Kilogram)

  The quantity of bar reinforcement steel measured for payment per pound (kilogram) in bridges and concrete box culverts will be the algebraic sum of the base pay quantity and authorized quantity changes.

  Reinforcement bar weight calculations will be made using the theoretical unit weight in pounds (kilograms) per foot (meter) for deformed bars as shown in the table of Deformed Bar Designation Numbers, Units Weights, and Nominal Dimensions (Table 2). This table is taken from ASTM A 615.

  Lengths of bent bars will be the sum of the component sections of the bars as shown on the Plans.

Table 2—Deformed Bar Designation Numbers, Unit Weights, and Nominal Dimensions

	Nominal Dimensions			
Bar Designation No.*	**Unit Weight lb/ ft (kg/m)**	**Diameter in (mm)**	**Cross-sectional Area, in² (mm²)**	**Perimeter in (mm)**
3 (10M)	0.376 (0.560)	0.375 (9.5)	0.11 (71)	1.178 (29.9)
4 (13M)	0.668 (0.994)	0.500 (12.7)	0.20 (129)	1.571 (39.9)
5 (16M)	1.043 (1.552)	0.625 (15.9)	0.31 (199)	1.963 (49.9)
6 (19M)	1.502 (2.235)	0.750 (19.1)	0.44 (284)	2.356 (59.8)
7 (22M)	2.044 (3.042)	0.875 (22.2)	0.60 (387)	2.749 (69.8)
8 (25M)	2.670 (3.973)	1.000 (25.4)	0.79 (510)	3.142 (79.8)

	Nominal Dimensions			
Bar Designation No.*	**Unit Weight lb/ ft (kg/m)**	**Diameter in (mm)**	**Cross-sectional Area, in² (mm²)**	**Perimeter in (mm)**
9 (29M)	3.400 (5.060)	1.128 (28.7)	1.00 (645)	3.544 (90.0)
10 (32M)	4.303 (6.404)	1.270 (32.3)	1.27 (819)	3.990 (101.4)
11 (36M)	5.313 (7.907)	1.410 (35.8)	1.56 (1006)	4.43 (112.5)
14 (43M)	7.650 (11.38)	1.693 (43.0)	2.25 (1452)	5.32 (135.1)
18 (57M)	13.600 (20.24)	2.257 (57.3)	4.00 (2581)	7.09 (180.1)
*Bar numbers are based on the number of eighths-of-an-inch included in the nominal diameter of the bars. Metric equivalents are rounded to the nearest whole millimeter.				

511.4.01 Limits

A. Construction of Minor Items

No separate measurement or payment will be made for the cost of bar reinforcement steel used in constructing minor items.

B. Prestressed Concrete Bridge Members

Bar reinforcement steel in prestressed concrete bridge members will be considered a component part of the members. The cost shall be included in the Contract Price for prestressed concrete bridge members.

C. Handrail End Posts

Reinforcement steel in handrail end posts that are a part of the superstructure or substructure will be considered part of the superstructure or substructure quantities.

D. Lap Splices

Extra reinforcement steel in lap splices permitted for convenience at splices not shown on the Plans will not be measured for payment.

511.5 Payment

This work will be paid for at the Contract Price per Lump Sum or per pound (kilogram) of bar reinforcement steel, each complete in place.

Payment will be made under:

Item No. 511	Superstructure Reinforcement Steel—Bridge No._____	Per lump sum
Item No. 511	Bar Reinforcement Steel	Per pound (kilogram)

511.5.01 Adjustments

A. Plan Quantities

Assume the burden of proof for errors of commission or omission in the Plan quantities.

The Department will not consider requests for additional monies because of Plan errors unless they are submitted with the bar lists and weights described in Subsection 511.1.03.B, “Bar Lists and Calculated Weights.” Projects involving multiple bridges or non-skewed concrete box culverts will be considered on an individual basis.

Quantities for bridges and concrete box culverts shown on the Contract Plans (including Standard Plans) will beconsidered the Base Pay Quantity. Calculated additions or deductions will be applied to the Base Pay Quantity when quantity changes authorized by the Engineer are made. Changes include, but are not limited to, the following:

- Raising or lowering foundations
- Lengthening or shortening concrete box culverts
- Correcting Plan quantity errors or placement details

B. Lump Sum Payment

When authorized quantity changes in the bar reinforcement Plan Quantity are made, Lump Sum payments will be adjusted on a pro-rata basis as follows:

1. If the calculated bar reinforcement weights furnished by the Contractor differ from the Plan Quantity by more than two percent, the Bridge Office will recalculate the plan quantity.
2. If the recalculated Plan Quantity differs by more than two percent from the original Plan Quantity, the Plan quantity will be revised by the Bridge Office to equal the recalculated quantity or the Contractor's quantity, whichever is lower. The Lump Sum payment will be adjusted on a pro-rata basis.

When the Contractor exercises an optional feature of the Plans that results in the only increase or decrease to the Base Pay Quantity, there will be no increase or decrease in payment. However, if the two percent variation is being considered, the effects of the optional feature will favor the Department.

C. Prestressed Concrete Deck Panels

Payment for prestressed concrete deck panels will be 35 percent of the lump sum superstructure reinforcement steel price. Payment will be made after panels are placed.

Payment for post-tensioned box girder bridges will be 35 percent of the lump sum superstructure reinforcement steel price only for the reinforcement steel in the top slab of the box.

Section 512—Shear Connectors

512.1 General Description

This work consists of furnishing and welding shear connectors as shown on the Plans. This work is a Pay Item only when specified in the Contract.

512.1.01 Definitions

General Provisions 101 through 150.

512.1.02 Related References

A. Standard Specifications

Section 501—Steel Structures

B. Referenced Documents

ASTM A 709, Grade 36 (ASTM A 709M, Grade 250)

512.1.03 Submittals

General Provisions 101 through 150.

512.2 Materials

Materials shall meet the following requirements:

- Unless otherwise specified, channel type shear connectors shall be manufactured from structural steel meeting ASTM A 709, Grade 36 (ASTM A 709M, Grade 250).

- Use the stud type shear connectors of the size or diameter and length specified on the Plans. Do not paint or galvanize studs.

  Ensure that stud type shear connectors and the welding comply with Subsections 501.3.04.H, and 501.3.06.C, "Welded Construction."

For a list of sources, see QPL 6.

512.2.01 Delivery, Storage, and Handling

General Provisions 101 through 150.

512.3 Construction Requirements

512.3.01 Personnel

General Provisions 101 through 150.

512.3.02 Equipment

Ensure that equipment for welding, chipping, and oxygen cutting is designed, manufactured, and maintained so that qualified welders and welding operators can meet the Specification requirements.

512.3.03 Preparation

General Provisions 101 through 150.

512.3.04 Fabrication

General Provisions 101 through 150.

512.3.05 Construction

A. Fabricate Shear Connectors

Fabricate shear connectors according to the Specifications and the Plan details.

1. Channel Type Shear Connectors

   Length tolerances for cutting the channel type are plus 1/2 in (13 mm) and minus 1/4 in (6 mm).
2. Stud Type Shear Connectors

   The stud length specified shall be the length after welding.

B. Construct Shear Connectors

Shear connectors may be welded to the girder flanges' beam either in the shop or at the site.

In either case, ensure that shear connector welding and construction complies with Subsections 501.3.04.H, and 501.3.06.C, "Welded Construction," the Plan details, and the following:

1. Before welding, prepare shear connectors and base metal as follows:
   a. Clean the shear connectors and the base metal of rust, scale, oil, paint, and other harmful substances that would affect the welding operation and the bonding to concrete.

      If the connectors are excessively pitted or cannot be cleaned, they will be rejected.
   b. Wire-brush, peen, prick-punch, or grind the base metal where the shear connectors will be welded. Perform this step only when necessary to obtain satisfactory welds.
2. Do not weld shear connectors when the temperature of the base metal is below 0 °F (-18 °C) or when the surface is wet or exposed to rain or snow.
3. Install shear connectors as follows:
   a. Channel Type Shear Connectors

      Location tolerances for individual connectors are plus or minus 1/4 in (5 mm) from the Plan location. Place connectors at right angles to the beam flanges.

b. Stud Type Shear Connectors

Install stud type shear connectors according to Subsections 501.3.04.I.2, “Paragraph 3.10.1” and 501.3.04.I.3, “Paragraph 4.30.1.”

C. Repair Defective Welds

Repair defective welds, shear connectors, and base metals as follows:

1. Channel Type Shear Connectors

   Repair channel type shear connectors as follows:

   a. Repair undersized but otherwise sound welds by bringing the weld up to size with additional welding.
   b. Repair undercut caused by the welding process by filling with additional weld metal.
   c. Repair unsound welds as follows:
      1) Remove the weld by chipping.
      2) If removing unsound welds damages the base metal, repair the base metal by welding and grinding before rewelding the shear connector.
      3) Replace the weld with sound welds.
2. Stud Type Shear Connectors

   Repair stud type shear connectors according to Subsections 501.3.04.I.2, “Paragraph 3.10.1” and 501.3.04.I.3, “Paragraph 4.30.1.”

512.3.06 Quality Acceptance

A. Inspect Welds

The Engineer will inspect and must approve shear connector welds before the Contractor encases them in concrete. The Engineer will inspect them as follows:

1. Channel Type Shear Connectors

   The Engineer will visually inspect the welds to determine the following:

   - Welds are sound.
   - Welds are the size shown on the Plans.
   - Welds are the proper profile.

   If the Engineer finds defective welds, they shall be repaired at the Contractor’s expense as specified in Subsection 512.3.05.C, “Repair Defective Welds.”
2. Stud Type Shear Connectors

   The Engineer will inspect stud type shear connectors according to Subsections 501.3.04.I.2, “Paragraph 3.10.1” and 501.3.04.I.3, “Paragraph 4.30.1.”

512.3.07 Contractor Warranty and Maintenance

General Provisions 101 through 150.

512.4 Measurement

When a Pay Item for shear connectors is specified in the Contract, the quantity measured for payment will be the pounds (kilograms) of installed shear connectors accepted.

Pay quantities will be computed as follows:

1. **Channel Type Shear Connectors.** The weight will be computed for the length and nominal weight per foot (meter) shown on the Plans.
2. **Stud Type Shear Connectors.** The weight will be computed from the nominal dimensions of a stud as shown on the Plans.

512.4.01 Limits

A. Weights

The weights of weld metal flux, arc shield, etc., will not be included in the pay quantity, but their costs shall be included in the Contract Price for this Item.

B. Separate Measurement

Generally, there will be no Pay Item specified for shear connectors in the Contract. Therefore, there will be no separate measurement, and the cost of furnishing and installing the connectors shall be included in the Contract Price for structural steel.

512.5 Payment

When a Pay Item is specified for shear connectors in the Contract, the work will be paid for at the Contract Price per pound (kilogram) for shear connectors of the specified type, complete in place.

Payment will be made under:

Item No. 512	Channel Shear Connectors	Per pound (kilogram)
Item No. 512	Stud Shear Connectors	Per pound (kilogram)

512.5.01 Adjustments

General Provisions 101 through 150.

Section 513—Precast Reinforced Concrete Box Culverts

Barrel Sections and End Sections

513.1 General Description

This work consists of constructing, transporting, joining, and finishing precast box culvert installations (normally as alternates to cast-in-place box culverts) according to Plan details and these Specifications.

Use precast boxes only in these situations:

- Under allowable fill heights designated on the Plan details
- As approved

Design numbers for precast barrel sections refer to Plan designations.

Precast ends refer to precast wingwalls, parapets, apron sections, toewalls, and baffles for outlets.

513.1.01 Definitions

General Provisions 101 through 150.

513.1.02 Related References

A. Standard Specifications

Section 207—Excavation and Backfill for Minor Structures

Section 500—Concrete Structures

Section 506—Expanded Mortar

Section 834—Masonry Materials

Section 843—Concrete Pipe

Section 848—Pipe Appurtenances

Section 852—Miscellaneous Steel Materials

B. Referenced Documents

ASTM C 789

AASHTO M 259

AASHTO M 36

AASHTO M 252

513.1.03 Submittals

General Provisions 101 through 150.

513.2 Materials

Materials shall meet the requirements of the following Specifications:

Material	Section
Concrete (for Precast Boxes)	843.2.01
All Other Concrete	500
Reinforcing Steel	853
Steel Bolts, Nuts, and Washers	852.2.01
Anchor Bolts	852.2.02
Bituminous Plastic Cement	848.2.05
Preformed Plastic Gaskets	848.2.06
Grout or Mortar	834.2.03
Expanded Mortar	506
Corrugated Steel Pipe (Sleeves)	AASHTO M 36
Corrugated Plastic Pipe (Sleeves)	AASHTO M 252
Backfill	207

513.2.01 Delivery, Storage, and Handling

General Provisions 101 through 150.

513.2.02 Precast Reinforced Concrete Box Culvert Barrel and End

A. Requirements

Refer to the Standard Specifications or Plan details for the reinforcement steel requirements, concrete strength, maximum fill heights, and minimum cover. Use the design number for the specified size and fill height.

1. Components
   a. Use precast end components that are according to Plan details, notes, and Section 500.
   b. Ensure that the precast wingwalls and aprons are built so that the corrugations of the pipe sleeve insets lock into the concrete and still has the reinforcement steel maintained all around the pipe sleeve insets.
   c. Use modified connector boxes of the type required for connections to precast ends or cast-in-place ends.

d. Have the manufacturer of the precast ends galvanize and provide all steel bolts, nuts, steel plates, and anchor bolts.

e. Use pipe sleeves rigid enough to withstand concrete placement, anchoring, and construction loads without damage or excessive deformation.

2. Alternates

The Contractor may, at no additional payment, use precast box sections with a greater span or height than specified on the Plans under the following conditions:

- Minimum cover required for the design number is retained.
- No detrimental effects result from using the larger size.

The Contractor also may substitute a combination for multiple line culverts if the clear height and total clear spans are at least equal to that specified on the Plans.

Submit any alternate designs, alternate materials, or alternate methods of manufacturing to the Department for approval. Include all the necessary details and/or Specifications in the submission.

3. Certification

Submit to the Engineer a certificate from the manufacturer of the precast boxes and precast ends stating that all of the precast box sections and all of the precast end components manufactured in this plant for the use of the Department contain at least the minimum requirements of reinforcement steel specified herein.

a. Ensure that the certificate is sworn to for the manufacturer by a person having legal authority to bind the company.

b. Submit the manufacturer's certificate with a guarantee providing the following:

1) All precast box and/or all precast end components will be replaced without cost to the purchaser, if the reinforcement steel does not meet these Specifications.

2) Language so that the guarantee remains in effect as long as the manufacturer continues to furnish precast box culvert barrel sections and precast end sections for use by the Department.

The manufacturer's certificate will not limit the right of the Department to make inspections and checks of the materials in manufactured precast sections prior to and during the construction of the culvert line.

B. Fabrication

Except as otherwise specified on the Plans or in the Specifications, manufacture precast box culvert barrel sections according to AASHTO M 259 or ASTM C 789 and applicable parts of GDT 16.

1. **Lifting.** Cast no more than four handling devices or lifting holes in the top of each box, in each precast wing section, and in each precast apron section.

a. Make holes no more than 2 in. (50 mm) in diameter nor more than 2 in (50 mm) square.

b. Do not cast lifting holes in the sides or bottom of the boxes.

c. Do not lift apron sections or wingwall sections by or through the pipe sleeve insets.

2. **Finishing and Marking.** Put a Type I, ordinary formed surface finish on the precast boxes and precast end components as in Subsection 500.3.05.AB.

a. Ensure that the precast boxes and precast end components (except baffles) have the following markings made either by indenting into the concrete or with waterproof paint.

1) Name or trademark of the manufacturer

2) Date of manufacture

3) Box sections (span, rise, maximum fill height, minimum cover, and concrete design strength)

4) Ensure that the top of each precast box is clearly indented by marking into either the inner or outer surface of the concrete during manufacture.
5) Ensure that the word "TOP" is painted on the inside top surface of each box in waterproof paint. Ensure that this marking comes from the manufacturer at the plant.
6) When so indicated on the Plans, number and match-mark the sections.
7) Ensure each section bears the Department Inspector's approval stamp.

3. **Precast Parapets.** You may allow the manufacturer to bolt precast parapets to connector box Type P at the manufacturer's plant or at the construction site.

   Have the manufacturer check all precast components for fit and connections before transporting the components to the project.

C. Testing and Inspection

1. Use applicable parts of GDT 16.
2. Determine concrete compressive strength from cylinder or core tests as required by the laboratory.

D. Materials Warranty

General Provisions 101 through 150.

513.3 Construction Requirements

513.3.01 Personnel

General Provisions 101 through 150.

513.3.02 Equipment

General Provisions 101 through 150.

513.3.03 Preparation

A. Excavation, Bedding, and Backfill

Excavate, place bedding, and backfill according to Section 207 and the Plan details.

Place bedding as follows:

1. Place bedding between graded forms set at least 18 in (450 mm) outside each outside wall of the boxes or from the edge of the precast apron sections.
2. Shape the bedding material to fit the bottom of the precast sections.
3. Screed off the graded forms.
4. Grade the bedding surface essentially perfect. The maximum tolerance is plus or minus 1/8 in (3 mm).
5. Ensure that the bedding is level in the plane perpendicular to the culvert center line.
6. Check the grade of the bedding surface on both sides before installing precast sections.
7. After placing the precast sections on the graded bedding, remove and reuse the forms, if needed.

513.3.04 Fabrication

General Provisions 101 through 150.

513.3.05 Construction

Install the structures as required by the Specifications and the Plan details, or as directed by the Engineer. Provide necessary temporary drainage.

A. Install Barrels

Install barrels according to the manufacturer's recommendations.

1. **Multiple Barrel Box Culverts.** Install these box culverts as follows:
   a. Lay precast box culvert sections in the prepared trench with socket ends pointing upstream.
   b. Joint the sections with either bituminous plastic cement or preformed plastic gaskets using these guidelines:
      - In bituminous plastic cement joints, fill the annular space with joint material and wipe smooth the inside of each joint in the barrel.
      - Pull box sections together with a come-a-long or mechanical puller to provide jointing satisfactory to the Engineer.
2. **Multiple Line Box Culverts.** These precast box culverts are the alternative to cast-in-place multiple barrel box culverts.

   Where multiple lines are skewed, determine the end treatment method including the positions of the connector boxes, the parapet alignment, and the lengths of wingwalls needed for proper slope intercepts. This must occur before barrel installation begins.

   Install multiple culvert lines adjacent to one another according to Plan details.

   Use grout (see Subsection 834.2.03, "Mortar and Grout"), a concrete mix, or other material approved by the Engineer as filler material between multiple lines.

B. Protect Structures from Traffic and Loads

Before allowing traffic or loads on the box culvert, provide the depth and width of compacted backfill as shown on the Plans to protect the structure from damage or displacement.

Damaged or displaced structures subjected to construction loads or erosion during installation and backfill shall be repaired at the Contractors expense.

C. Use Ends for Precast Barrels

Use precast or cast-in-place ends as follows:

1. Precast Ends

   Precast ends are allowed in the following situations:
   - Where either single line or multiple line precast barrels are normal to the roadway
   - With skewed single lines or skewed multiple lines at locations shown on the Plans or approved by the Engineer

   Do not use precast ends with skewed culverts if the installation would be incompatible with roadway geometrics or would cause other detrimental effects.

   a. **Precast Ends on Skewed Culverts.** Where precast ends are allowed on skews, extend the barrel length so that the precast wing end on the acute side falls approximately at the same point that the cast-in-place long wing end would have fallen, with additional embankment warped to fit.

   b. **Aprons for Precast Wingwalls.** Use precast wingwalls with 8 in (200 mm) thick reinforced concrete aprons for anchor connections.

      For sleeve inset fill, use either expanded mortar (see Section 506) or non-shrinking mortar (used immediately after mixing) approved by the Engineer. Do not subject anchors to loads until the mortar sets up.

      Use precast or cast-in-place aprons that are multi-piece or monolithic.

      1) **Precast Aprons.** Carefully place sections to grade upon the screeded bedding described in Subsection 513.3.03.A, "Excavation, Bedding, and Backfill."

         Ensure that forms hold bedding for toewalls according to the Plan details and as directed by the Engineer.

Make joints between apron sections water tight.

2) **Cast-in-Place Aprons.** Ensure that concrete is set up before installing the wingwalls. Connect wingwalls to apron anchors according to Plan details.

2. **Cast-in-Place Ends.** When required and when not using precast ends, use cast-in-place ends as follows:
   a. Use cast-in-place ends at the ends of precast box culvert barrels (either skewed or normal).
   b. Use cast-in-place ends of the same design as cast-in-place box culvert barrels.
   c. Use aprons with cast-in-place wingwalls only where specified on the Plans or Special Provisions.
   d. Use cast-in-place ends with multiple precast lines as follows:
      1) Minimally increase the standard parapet and toewall widths to accommodate the double inside walls.
      2) Use Type C connector boxes between the standard precast boxes and the cast-in-place construction.
   e. Where there is a skewed alignment or other nondescript alignment condition, the Contractor may cast-in-place a fraction of the barrel between the connector box and the parapet.

D. Finish the Culvert

After precast sections are set in their final position, do the following:

1. Repair spalled areas around the holes.
2. Fill the lift holes with mortar or concrete.
3. Cure the concrete as directed in Subsection 500.3.05.Z, “Cure Concrete.”

513.3.06 Quality Acceptance

General Provisions 101 through 150.

513.3.07 Contractor Warranty and Maintenance

General Provisions 101 through 150.

513.4 Measurement

Unless otherwise specified, the Contract includes alternate plans for both precast and cast-in-place box culverts. Plan quantities and payment are based upon the cast-in-place alternate.

A. Precast Box Culvert Barrels

The required linear feet (meter) of culvert will be converted for payment into cubic yards (meters) of Class A Concrete and pounds (kilograms) of reinforcement steel. These measurements will come from the standard or special design computation tables for cast-in-place box culverts.

Multiple line precast box culverts will be measured as a multiple barrel cast-in-place box culvert of the specified size.

B. Ends for Barrels

Wingwalls, parapets, toewalls, and aprons may be either precast or cast-in-place. Plan quantities and payment for these items are based upon the cast-in-place design quantities.

C. Backfill

Foundation backfill material Type II, when required, will be measured according to Subsection 207.4, “Measurement”.

513.4.01 Limits

No additional payment will be made when barrel lengths, apron areas, backfilling, or other items are increased due to using the precast alternate.

The following items will not be paid for:

- Connecting hardware
- Mortar
- Joint materials
- Filler material used between multiple precast culvert lines

513.5 Payment

Payment for Precast Reinforced Concrete Box Culvert Barrel Sections and End Sections will be based on the cast-in-place alternate and will include conversions when using the precast design. Cast-in-place concrete will be paid for under Section 500 and reinforcing steel will be paid for under Section 511.

Payment for Foundation Backfill Type II will be made according to and Subsection 207.5, “Payment.”

513.5.01 Adjustments

General Provisions 101 through 150.

Section 514—Epoxy Coated Steel Reinforcement

514.1 General Description

This work consists of furnishing and placing epoxy coated bar reinforcement steel according to these Specifications.

514.1.01 Definitions

General Provisions 101 through 150.

514.1.02 Related References

A. Standard Specifications

Section 511—Reinforcement Steel

Section 853—Reinforcement and Tensioning Steel

B. Referenced Documents

QPL 38

AASHTO M284

514.1.03 Submittals

A. Mill Orders and Shipping Statements

Submit mill orders and shipping statements as required in Subsection 511.1.03.A, “Mill Orders and Shipping Statements.”

514.2 Materials

When choosing an epoxy coating material, the Contractor may do either of the following:

- Use an epoxy coating material from QPL 38 of acceptable, powdered epoxy resins and their manufacturer.
- Use powder that meets AASHTO M284.

Ensure that uncoated, deformed steel bars meet the applicable requirements of Subsection 853.2.01, “Steel Bars for Concrete Reinforcement.”

Allow the Office of Materials to sample and test materials any time.

A. Epoxy Coating Requirements

1. Notify the Office of Materials at least two weeks before blast cleaning the steel reinforcement bars and applying the epoxy coating. This time will allow the Department to schedule an inspection.
2. You may request, in writing, that the Department accept the coating on the basis of a Certificate of Compliance. If the Department approves your request, you must meet the following conditions:
   a. Ensure that the coating applicator has a quality assurance program approved by the Department.
   b. Furnish the Department a Certificate of Compliance from the coating applicator with each shipment of coated bars. Ensure that the Certificate of Compliance:
      - Verifies that the coated bars and coating material have been tested in accordance with the requirements of this Specification
      - States the actual test results for each requirement
      - States that the test results comply with the requirements
3. Submit from the coating applicator at the time of shipping a written certification attached to a completed Form 166-A. Ensure that the certificate states that the coated reinforcing bars meet the requirements of this Specification.
4. The epoxy for the fabrication shop repair work shall also be suitable for use in the field by the Contractor installing the coated bars in the bridge deck.

B. Fabrication

1. Immediately before applying the epoxy coating, blast clean all surfaces of the steel bars to a near-white surface finish as per the Steel Structures Painting Council Surface Preparation Specification, SSPC-SP10, for Near-White Blast Cleaning.
   a. Make the blast-cleaned surface correspond with either pictorial standard A Sa 2½, B Sa 2½, or C Sa 2½ of SSPC Vis 1.
   b. Clear the surfaces of all dust and grit.
2. Coat all tie wires, clips, chair and bar supports, and other metallic materials used to install the epoxy-coated reinforcing bars with either:
   - The same powdered epoxy resin with a minimum thickness of 6 mils (0.15 mm)
   - A plastic material approved by the Office of Materials
3. Coat the ends of the coated bars cut during fabrication with the epoxy used for repairs.
4. Repair damaged areas and coat the ends of cut bars within 12 hours and before any visible rusting appears.

C. Acceptance

1. The Office of Materials will inspect the application and the finished coating at the applicators plant, according to the provisions of Subsection 106.03, “Samples, Tests, Cited Specifications,” or will accept the Certificate of Compliance under the conditions listed in Subsection 514.2.A.
2. Grant the Department Inspector free access to the coating applicator’s plant.
   a. The Inspector may have any or all of the work specified in this section performed in his or her presence.
   b. Furnish the Inspector with check samples of the coated bars on a random basis as the Inspector deems necessary for testing by the Office of Materials.

D. Materials Warranty

General Provisions 101 through 150.

514.2.01 Delivery, Storage, and Handling

Before using epoxy coated steel bars, carefully load, unload, and store them on the Project site to prevent damage or contamination.

Handle the bars as follows:

1. Use systems for handling coated bars that have padded contact areas for the bars whenever possible.
2. Use padded bundling bands.
3. To prevent sags in the bar bundle, lift bundles with a strong back, multiple supports, or a platform bridge. Sags in the bundle cause bar-to-bar abrasion.
4. Do not drop or drag bars.

514.3 Construction Requirements

514.3.01 Personnel

General Provisions 101 through 150.

514.3.02 Equipment

General Provisions 101 through 150.

514.3.03 Preparation

General Provisions 101 through 150.

514.3.04 Fabrication

A. Fabrication Shop Repair Work

Refer to Subsection 514.2.B, “Fabrication”

514.3.05 Construction

A. Install Bars

To protect and preserve the epoxy coating, install coated bars in the bridge deck according to Subsection 511.3.05, “Construction,” this Specification, and the Engineer’s directions.

Have the Engineer approve additional splices to accommodate lengths suitable for coating equipment.

Cleaning and repair methods and materials for coated bars are subject to the Engineer’s approval.

Install the bars as follows:

1. During and after installing bars into their deck locations, repair cuts, nicks, and abrasions in the bar coating with the epoxy repair material supplied by the powdered epoxy resin manufacturer.

   Repair damaged areas within 12 hours and before visible rusting appears.
2. Before they rust, repair damaged reinforcing steel and metallic accessories with the epoxy repair material supplied by the powdered epoxy resin manufacturer.
3. If small damaged areas are rusted, thoroughly remove the rust by sand blasting or other approved methods before repairing the areas.
4. Provide a rust-free and completely coated steel reinforcement system before placing the concrete in the deck to prevent subsequent rusting.
5. When the coated bars are incorporated into the work, keep them free from dirt, paint, oil, grease, or other foreign substance.
6. When necessary, clean the bars to the satisfaction of the Engineer.
7. Place the deck concrete using methods and equipment that will not damage the coated materials.
8. Since the epoxy coating is flammable, do not expose the coated bars to fire or flame. Do not cut coated bars by burning.

514.3.06 Quality Acceptance

General Provisions 101 through 150.

514.3.07 Contractor Warranty and Maintenance

General Provisions 101 through 150.

514.4 Measurement

The accepted epoxy coated steel reinforcing bars will be measured according to Subsection 511.4, “Measurement.”

514.4.01 Limits

A. Theoretical Weight of Uncoated Bars

The Department will not add to or deduct from the theoretical weight per foot (meter) of the uncoated bars because of additional Specification requirements for blast cleaning and epoxy coating of the bars.

514.5 Payment

The accepted epoxy-coated steel reinforcing bars will be paid for according to Subsection 511.5, “Payment.”

Payment will be made under:

Item No. 514	Epoxy Coated Bar Reinforcement Steel	Per pound (kilogram)
Item No. 514	Epoxy Coated Superstructure Reinforcement Steel, Bridge No._____	Per lump sum

514.5.01 Adjustments

A. Additional Splices

Additional splices requested to accommodate lengths suitable for coating equipment will be subject to the Engineer’s approval. Additional splices will be at the Contractor’s expense.

B. Additional Expenses

Additional expenses incurred by the Contractor or suppliers because of the requirements in this Specification are considered incidental. These expenses are included in the Contract Price per pound (kilogram) or per Lump Sum.

Section 515—Handrail-Ferrous Metal and Pipe

515.1 General Description

This work consists of placing handrail and posts made of ferrous metal pipe. It shall include setting anchorages, preparing bearing areas, and painting or galvanizing the handrail, whichever the Plans require.

515.1.01 Definitions

General Provisions 101 through 150.

515.1.02 Related References

A. Standard Specifications

Section 500—Concrete Structures

Section 501—Steel Structures

Section 535—Painting Structures

Section 645—Repair of Galvanized Coatings

B. Referenced Documents

ASTM A 123/A 123 M

ASTM A 153/A 153 M

515.1.03 Submittals

General Provisions 101 through 150.

515.2 Materials

All materials shall meet the requirements of the following Specifications.

Material	Section
Structural Steel	851
Malleable Iron Castings	854.2.04
Steel Castings	854.2.05
Steel Pipe	847.2.01
Steel Bolts, Nuts, and Washers	852.2.01
Paint	870
Plain Steel Bars—Threaded Ends	852.2.02

515.2.01 Delivery, Storage, and Handling

Handle the rails and posts carefully to minimize damage to shop paint or galvanizing.

515.3 Construction Requirements

515.3.01 Personnel

General Provisions 101 through 150.

515.3.02 Equipment

General Provisions 101 through 150.

515.3.03 Preparation

General Provisions 101 through 150.

515.3.04 Fabrication

General Provisions 101 through 150.

515.3.05 Construction

A. Fabricate Handrail

Fabricate handrail as follows. All fabrications shall meet the applicable Specifications of Subsections 501.3.04.H and 501.3.06.C, “Welded Construction.”

1. **Fabrication Material.** Fabricate handrail from plates, shapes, bars, pipe, castings, or from combinations of these materials as shown on the Plan details.
2. **Handrail Not Supported on Concrete Parapets.** When erected bridge handrail will not be supported on a concrete parapet, fabricate the handrail so posts will be plumb.
3. **Stairways on Grades.** On handrail for stairways on grades, use adjustable malleable iron fittings where required or weld the handrails to the posts when specified on the Plans.

4. **Welding Requirements.** Welding shall meet the requirements of Subsections 501.3.04.H and 501.3.06.C, "Welded Construction."

   Grind smooth all welds except fillet welds. Do not grind fillet welds; leave them as they are.

5. **Galvanizing.** Before galvanizing, complete all cutting, welding, and fabrication of rails, posts, bolts, set screws, and other components.

   Galvanize material according to the following standards:

Material	Standard
All material except hardware	ASTM A 123/A 123M
Hardware	ASTM A 153/A 153M

6. **Shop Painting.** If metal or pipe handrail, posts, and their component parts will not be galvanized, paint them with the type of shop paint required on the Plans.

   All painting shall meet the requirements of Section 535.

B. Construct Handrails

Construction shall meet the applicable Specifications of Subsections 501.3.04.H and 501.3.06.C, "Welded Construction."

Construct handrail according to the Plan details and as follows:

1. **Set Anchor Bolts.** Set anchor bolts using these guidelines:
   - Set the anchor bolts according to the Plan details and ensure that the bolts have the correct spacing and projection.

     Projections shown on the Plans are for flat grades and assume no use of shims.
   - On other grades or where shims are needed, modify the projection shown on the Plans so that after all shims, pads, posts, and washers have been placed, the anchor bolt nut can be screwed completely onto the anchor bolt.
   - If the projection is too short, lengthen or replace the bolt (at the Contractor's expense) as directed by the Engineer.
2. **Prepare Bearing Areas.** Before placing the posts, prepare bearing areas using these guidelines to obtain full contact between the posts or shims and the concrete:
   - Remove all concrete protrusions.
   - Fill all depressions.
   - Ensure that bearing areas for posts are true to grade.
   - Finish concrete with the Type IV—Floated Surface Finish specified in Subsection 500.3.05.AB.5, "Type IV—Floated Surface Finish."
3. **Erect Handrail.** Erect handrail using these guidelines:
   - Make all rails parallel to grade.
   - Where bridge rail will be supported on a concrete parapet, set handrail posts normal to grade.
   - Set other handrail posts and pipe standards plumb. If necessary, use shims under post bases and floor flanges to achieve plumb posts.
   - Tighten the set screws as detailed on the Plans.
   - Tighten anchor bolt nuts to a snug fit with full bearing on the base of the post.
   - When posts and rails are completely bolted into place, ensure that they are true to line and grade.
4. **Paint Handrail in the Field.** Painting shall meet the Specifications of Section 535.

   If metal or pipe handrail, posts, and their component parts are not galvanized, paint them with the type of paint and number of coats required on the Plans.
5. **Repair Galvanized Coating.** Repair damaged galvanized coatings (at the Contractor's expense) according to Section 645.

515.3.06 Quality Acceptance

General Provisions 101 through 150.

515.3.07 Contractor Warranty and Maintenance

General Provisions 101 through 150.

515.4 Measurement

This work will be measured for payment in linear feet (meters) of accepted handrail. Handrail will be measured along the top rail from out-to-out of the ends of metal rail or from out-to-out of metal end posts, whichever is greater. No deductions will be made for openings at deck expansion joints or at light standards.

515.4.01 Limits

General Provisions 101 through 150.

515.5 Payment

This work will be paid for at the Contract Price per linear foot (meter) for metal or pipe handrail complete in place.

Payment will be made under:

Item No. 515	Ferrous Metal Handrail, Type	Per linear foot (meter)
Item No. 515	Galvanized Steel Pipe Handrail:_____ in (mm) (Type)	Per linear foot (meter)
Item No. 515	Black Steel Pipe Handrail_____ in (mm) (Type)	Per linear foot (meter)

515.5.01 Adjustments

General Provisions 101 through 150.

Section 516—Aluminum Handrail

516.1 General Description

This work consists of placing handrail and posts made of cast, rolled, or extruded aluminum or of combinations of these materials. It also includes setting anchorages and preparing bearing areas.

516.1.01 Definitions

General Provisions 101 through 150.

516.1.02 Related References

A. Standard Specifications

Section 500—Concrete Structures

B. Referenced Documents

General Provisions 101 through 150.

516.1.03 Submittals

General Provisions 101 through 150.

516.2 Materials

All cast posts for any one structure shall be produced by the same manufacturer.

All materials shall meet the requirements of the following Specifications:

Material	Section
Aluminum Alloy Sheet and Plate	850.2.01
Aluminum Alloy Bars, Rods, Shapes, and Wire	850.2.02
Aluminum Alloy Bolts, Nuts, and Set Screws	850.2.03
Aluminum Alloy Washers	850.2.04
Aluminum Alloy Rivets	850.2.05
Aluminum Alloy Shims	850.2.06
Cast Aluminum Alloy Railing Post	854.2.02
Aluminum Alloy Sand Mold Castings	854.2.03
Aluminum Alloy Extruded Tubing	850.2.07
Aluminum Alloy Pipe	850.2.08
Aluminum Impregnated Caulking Compound	870.2.05.A.3
Neoprene Pads	885.2.01
Steel Bolts, Nuts, and Washers	852.2.01
Plain Steel Bars—Threaded Ends	852.2.02
Galvanizing	852.2.01.B

516.2.01 Delivery, Storage, and Handling

General Provisions 101 through 150.

516.3 Construction Requirements

516.3.01 Personnel

General Provisions 101 through 150.

516.3.02 Equipment

General Provisions 101 through 150.

516.3.03 Preparation

General Provisions 101 through 150.

516.3.04 Fabrication

A. Fabricate Handrail

Fabricate handrail as follows:

1. Fabrication Material

   Fabricate handrail from plates, shapes, bars, pipe, castings, or from combinations of these materials as shown on the Plan details.

2. Handrail Not Supported on Concrete Parapets

   When erected bridge handrail will not be supported on a concrete parapet, fabricate the handrail so posts will be plumb.

516.3.05 Construction

A. Construct and Erect Handrail

Construct and erect handrail according to the Plan details and as follows:

1. Set Anchor Bolts

   Set anchor bolts as follows:

   a. Set the anchor bolts according to the Plan details and ensure that the bolts have the correct spacing and projection.

      Projections shown on the Plans are for flat grades and assume no use of shims.

   b. On other grades or where shims are needed, modify the projection shown on the Plans so that after all shims, pads, posts, and washers have been placed, the anchor bolt nut can be screwed completely onto the anchor bolt.

   c. If the projection is too short, lengthen or replace the bolt (at the Contractor's expense) as directed by the Engineer.

2. Prepare Bearing Areas

   Before placing the posts, prepare bearing areas as follows to obtain full contact between the posts or shims or pads and the concrete:

   a. Remove all concrete protrusions.

   b. Fill all depressions.

   c. Ensure that bearing areas for posts are true to grade.

   d. Finish concrete with the Type IV—Floated Surface Finish specified in Section 500.3.05.AB.5, "Type IV—Floated Surface Finish."

3. Protect Contact Surfaces

   Where aluminum alloys contact other materials, protect the contact surfaces as detailed on the Plans or as follows:

   a. **Contact with Other Metals or Wood.** Separate the contact surfaces with neoprene pads.

      Do not place aluminum alloys in direct contact with copper, copper base alloys, lead, nickel, iron, steel, or wood.

   b. **Contact with Concrete, Stone, or Masonry.** Separate the contact surfaces with neoprene pads.

4. Erect Handrail

   Erect handrail as follows:

   a. If the finish on rails or posts is damaged in handling, either repair it to the satisfaction of the Engineer or replace it (both at the Contractor's expense).

   b. Make all rails parallel to grade.

   c. Where bridge rail will be supported on a concrete parapet, set handrail posts normal to grade.

   d. Set other handrail posts plumb. If necessary, use aluminum alloy shims under post bases to achieve plumb posts.

   e. Tighten the anchor bolt nuts to a snug fit with full bearing on the base of the post.

   f. When posts and rails are completely bolted into place, ensure that they are true to line and grade.

516.3.06 Quality Acceptance

General Provisions 101 through 150.

516.3.07 Contractor Warranty and Maintenance

General Provisions 101 through 150.

516.4 Measurement

This work will be measured for payment in linear feet (meters) of accepted handrail. Handrail will be measured along the top rail from out-to-out of ends of aluminum rail or from out-to-out of aluminum end posts, whichever is greater. No deductions will be made for openings at deck expansion joints or at light standards.

516.4.01 Limits

General Provisions 101 through 150.

516.5 Payment

This work will be paid for at the Contract Price per linear foot (meter) for aluminum handrail complete in place.

Payment will be made under:

Item No. 516	Aluminum Handrail, (Type)	Per linear foot (meter)

516.5.01 Adjustments

General Provisions 101 through 150.

Section 517—Protective Concrete Collar for Existing Columns

517.1 General Description

Specifications for this work will be included elsewhere in the Contract.

Section 518—Raise Existing Bridge

518.1 General Description

Specifications for this work will be included elsewhere in the Contract.

Section 519—Concrete Bridge Deck Overlay

Section 520—Piling

520.1 General Description

This work consists of placing completed piling in structures. The work includes incidentals and additional work except for the following:

- Prestressed concrete cylinder piling (see Project Special Provisions)
- Piling for ground-mounted roadside signs (see Section 636)

Although square, prestressed-concrete piles are a Pay Item under Section 520, have them manufactured, finished, cured, marked, handled, stored at the plant, and shipped from the plant according to Section 865.

The requirements in this Specification are minimal. Comply with the requirements and assume the responsibility for taking additional precautions to complete the work successfully.

520.1.01 Definitions

Plan Driving Objective (PDO): Statement on the Plans specifying the minimum requirements during pile driving. The PDO may require a driving resistance (tonnage [kilonewtons] by formula), a minimum tip elevation, or a combination of these.

Minimum Tip Elevation: Elevation the pile tip cannot stop above. When composite prestressed concrete piling is used, this term will refer to the protruded tip of the Steel H-Pile Section.

Long Pile: A pile more than 50 ft (15 m) in length.

520.1.02 Related References

A. Standard Specifications

Section 101—Definitions and Terms

Section 104—Scope of Work

Section 109—Measurement and Payment

Section 500—Concrete Structures

Section 501—Steel Structures

Section 547—Pile Encasement

Section 636—Highway Signs

Section 855—Steel Pile

Section 865—Manufacture of Prestressed Concrete Bridge Members

B. Referenced Documents

ASTM D 1143

QPL 37

520.1.03 Submittals

A. Template Plan for Positioning Piling

Before driving piling, submit a plan for ensuring piling stability and position, including templates, to the Engineer. Do not drive piling until the plan is approved.

B. Plans for Loading Test Methods

Submit the plans for loading test methods to the Engineer for approval before beginning the work.

Ensure that the test method is logical and can be rationally analyzed by a commonly accepted structural design theory.

C. Loading Test Equipment

Submit the list of equipment for conducting loading tests to the Engineer for approval before beginning the work.

If the testing apparatus is a hydraulic jack, furnish 5 copies of the calibration certification to the Engineer for the equipment, prepared by the manufacturer, an authorized representative, or an approved testing laboratory. Consult the Engineer to find out which laboratories are approved.

520.2 Materials

Ensure that materials meet the requirements of the following Specifications:

Material	Section
Preservative Treatment of Timber Products	863
Timber Piles	861.2.01
Prestressed Concrete Piles Bridge Members	865
Welded and Seamless Steel Piles	855.2.01
Fluted Steel Shell Piles	855.2.02
Steel H-Piles	855.2.03
Steel Bolts, Nuts, and Washers	852.2.01
Aluminum Alloy Sheet and Plate	850.2.01
Metal Caps	862.2.01.A.5

Refer to Subsection 855, “Steel Pile” for Specifications on cast steel-H pile points. For a list of sources, see QPL 37.

Use the following piling types where shown on the Plans:

- Timber piling
- Prestressed concrete piling
- Metal shell piling
- Steel H-piling

Use other piling types when the Plans and Special Provisions require it.

520.2.01 Delivery, Storage, and Handling

A. Timber Piling

Handle timber piling carefully using only non-metallic slings. Do not drop or damage the piling.

Store timber piles on skids above the supporting surface. Keep hardware covered.

B. Prestressed Concrete Piling

Handle prestressed concrete piling carefully to prevent fracture by impact or by excessive bending stress either in storage, during transportation, or when being transferred to the leads. Do not place other materials on the piling during storage or transport.

1. Transporting Prestressed Concrete Piling

   Transport prestressed concrete piling using the approved limits of support spacing for the various sizes and lengths of piling. These limits are shown on Standard Plans or on other drawings and are available to the Engineer from the Department.

2. Loading and Unloading Prestressed Concrete Piling

   Load and unload piles using the embedded pick-up points placed during manufacture.

3. Storing Prestressed Concrete Piling

   Store piles as follows:

   - Store piling in single layers directly on the ground only when there is uniform, level bearing for the full pile length.
   - To store piles in tiers, support the piling using blocks of uniform thicknesses placed immediately adjacent to the embedded pick-up points and in line vertically.
   - Store piling in groups of the same lengths.

4. Placing Piles in the Leads or in Position

   When picking up piles from storage and placing them in the leads or in position, use only the single pick-up point, marked with "SP" or a line painted on the pile at the plant, unless noted on the Plans or otherwise directed by the Engineer.

5. Driving Piles

   Do not subject prestressed concrete piling to excessive tensile stresses from combining a particular hammer with the soil conditions. Excessive stress may occur, for example, in these situations:

   - When encountering hard driving resistance at the point of a long pile

   When such situations damage pile, make changes to provide undamaged piling in place. If piles are damaged, the Engineer may require the following:

   a. Reduce the energy delivered to the piling by reducing the stroke, changing the cushioning, or using a lighter ram.
   b. Maintain equivalent energy but use a heavier or lighter ram with a different stroke.
   c. Use a smaller hammer for the easier, initial driving.
   d. Drill pilot holes, jet, or spud. When these driving aids are required or permitted, see Subsection 520.3.05.B, "Drill Pilot Holes" and Subsection 520.3.05.G, "Jet and Spud."

C. Metal Shell Piling

Do not deform or dent metal shell piling during handling and storage. Place shells to be stored for a prolonged period on enough skids to prevent ground contact and deflection. Keep the shells fully drained.

D. Steel H-Piling

Do not deform or bend flanges on steel H-piling during handling and storage. Place steel H-piling to be stored for a prolonged period on enough skids to prevent ground contact and deflection. Keep the piling fully drained.

520.3 Construction Requirements

520.3.01 Personnel

Furnish enough labor and work to install the complete loading test, including a temporary shelter over the area if the Engineer requires it.

520.3.02 Equipment

A. Hydraulic Jack for Loading Tests

If the hydraulic jack used to apply the loading test changes behavior during use, return the jack to the manufacturer, an authorized representative, or a testing laboratory approved by the Engineer for recalibration.

B. Driving Head

Use a structural steel driving head recommended by the manufacturer as suitable for the type and size of pile being driven. The driving head shall:

- Hold the pile in the proper driving position
- Be constructed to prevent pile damage
- Be constructed to transmit the hammer energy along the pile axis
- Fit loosely enough around the pile head so that the pile can rotate slightly without binding

C. Cushion or Shock Blocks

Replace cushion blocks as necessary to prevent pile damage. Inspect cushions periodically to ensure that they prevent pile damage.

1. Hammer Cushions

   Use cushions or shock blocks above the driving head to avoid damaging the pile. Replace used hammer cushions reduced to half their original thickness with new cushions.

   Use hammer cushions of a man-made material only such as micarta or aluminum. Do not use materials such as plywood, hardwood, wire rope, and asbestos.

2. Pile Cushions

   For prestressed concrete piling up to 24 in (600 mm), provide a suitable pile cushion block for the top of the pile. Use a cushion made of material that does not compress so far that the cushioning effect is lost.

   For prestressed concrete piling, 30 in (750 mm) and 36 in (900 mm) square, use an approved solid hardwood pile cushion block at least 6 in (150 mm) thick or an equivalent in the base of the hammer to cushion the hammer ram blow on the pile or follower.

3. Follower Cushions

   When a follower is permitted or required, use an approved, square-shaped laminated cushion block between the follower and the top of the pile.

   Use a cushion block for a follower that is:

   - At least 6 in (150 mm) thick
   - Made of 1 in (25 mm) hardwood boards (preferably green) of uniform thicknesses
   - Cut to fit the pile head

   Subsection 520.3.02.F, “Followers,” defines a follower within the scope of these Specifications.

D. Hammers

Regardless of the requirements for hammers in these Specifications, the PDO governs in selecting the hammer. The exception for this is the tabulations for prestressed concrete piling shown in the Energy Rating Table in Subsection 520.3.02.D.1.b. Except for timber piling, drive piling with power hammers of an approved make and model (steam or diesel) that are single-acting (open end diesel) or double-acting (enclosed ram diesel).

When desired, use gravity (drop) hammers to drive timber piling and, within the conditions in Subsection 520.3.02.D.2, “Gravity Hammers,” steel H-piling and metal shell piling.

Hammer types and restrictions are as follows:

1. Power Hammers

   Maintain power hammers to obtain their potential stroke length and number of blows per minute. Driving resistance values are invalid when these requirements are not met.

   If driving resistance values are invalid, stop the driving operations and correct the problem. Do not begin driving until the problem is resolved.

   a. Power Hammer Types

Power hammer types include:

- **Steam Hammers.** Use steam or compressed air from boilers or air compressors to power steam hammers.

  Use boilers and air compressors with an accurate pressure gauge and capacities and hose sizes at least equal to those specified by the hammer manufacturers.
- **Open-End Diesel Hammers.** Use open-end diesel hammers that allow measurement of the ram stroke length above the top of the hammer.
- **Enclosed-Ram Diesel Hammers.** Use enclosed-ram diesel hammers with a bounce chamber gauge and charts that will evaluate the equivalent energy being produced under any driving condition.

b. Power Hammer Restrictions

Follow these power hammer restrictions:

- **Timber Piling.** Drive timber piling using a power hammer with a maximum energy rating of 22,400 ft·lb (30 400 N·m).
- **Steel Piling.** Drive steel H-piling and metal shell piling using a power hammer with an energy per blow of at least 1 ft·lb (1.4 N·m) but not less than 9,000 ft·lb (12 200 N·m) for each pound (kilogram) of driven weight.
- **Prestressed Concrete Piling.** Except as specified in the following Energy Rating Table, drive prestressed concrete piling using a power hammer with an energy per blow of at least 1 ft·lb (1.4 N·m) for each pound (kilogram) of pile weight, but not less than 15,000 ft·lb (20 300 N·m).

Driving conditions may require hammers with more energy than the minimum required on the Energy Rating Table. However, the Department will not require hammers that have more than the minimum energy rating, regardless of pile length, unless the Plans or Special Provisions specify otherwise.

Energy Rating Table (English)			
Manufacturer's Energy Ratings on Hammers for Prestressed Concrete Piling			
Pile Size (in)	Weight Lb/Ft	Minimum Energy Rating Ft·Lbs , Ft·Tons	
		Ft ▪ Lbs	Ft ▪ Tons
14 solid	204	22 400	11.2
16 solid	267	22 400	11.2
18 solid	338	32 000	16.0
20 solid	417	32 000	16.0
24 voided	482	32 000	16.0
30 voided	709	39 800	19.9
36 voided	923	50 000	25.0

Energy Rating Table (metric)		
Manufacturer's Energy Ratings on Hammers for Prestressed Concrete Piling		
Pile Size (mm)	**Weight kg/m**	**Minimum Energy Rating N·m**
350	304	30 400
400	397	30 400
450	503	30 400
500	621	30 400
600	717	30 400
750	1055	54 000
900	1374	67 800

2. Gravity Hammers

   When using a gravity hammer, regulate the drop height to avoid damaging the pile. Do not allow the drop height to exceed 10 ft (3 m) for timber piling and 12 ft (3.7 m) for steel piling.

   Ensure that the hammer is marked with its weight to the nearest 50 lbs (25 kg). Upon the Engineer's request, furnish a certified scale weight of the hammer.

   Follow these gravity hammer restrictions:

   a. **Timber Piling.** Drive timber piling using a gravity hammer that weighs at least 2,000 lbs (900 kg) but no more than 3,500 lbs (1500 kg).

      However, ensure that the hammer has enough weight to obtain the PDO with a maximum fall of 10 ft (3 m).

   b. **Steel Piling.** If desired, substitute a gravity hammer for a power hammer when the quantity of a steel piling type shown on the Bridge Plans Summary of Quantities does not exceed 800 linear ft (245 linear meters), including test pile lengths if any, for that pile type for an individual bridge.

      When using a gravity hammer within the scope of the linear foot (meter) condition, ensure that it has enough weight to obtain the PDO with a maximum fall of 12 ft (3.7 m). The maximum allowable hammer weight is 5,000 lbs (2300 kg).

   c. **Prestressed Concrete Piling.** Do not use gravity hammers to drive prestressed concrete piling.

E. Leads

Equip pile driving rigs with leads that allow the hammer to move freely and support piling during driving. Use leads that meet the following requirements:

- The vertical axis of the leads and hammer coincide with the vertical axis of the pile.
- The leads are long and rigid enough to hold the pile in accurate alignment while it is being driven.

However, ensure that the driving rig can slightly adjust the lead position to compensate for minor changes in direction while driving.

When the pile is supported by the material being penetrated or by approved templates, use hammer leads only.

Driving in deep water may require special platform-type templates to ensure piling stability and position (see Subsection 520.1.03.A, "Template Plan for Positioning Piling"). Use templates with enough area to accommodate all persons necessary to perform and inspect the work.

The Engineer may require templates in other necessary locations to ensure piling stability and position.

F. Followers

Do not use inserts of similar type piling placed between the hammer and a pile to keep the hammer above water level or other levels.

Within the scope of these Specifications, a follower is part of the driving mechanism used to drive larger-sized prestressed concrete piling.

Position the follower between the pile head and the hammer driving base to evenly distribute the driving energy across the concrete area of voided-type piling.

Always use followers when driving 36 in (900 mm) prestressed concrete piling. The Department allows followers when driving 30 in (750 mm) prestressed concrete piling.

G. Spuds

Use spuds heavy enough to penetrate through strata or a stratum of firm or hard material to reach the necessary depth.

Control the alignment for battered spudding using templates that maintain the batter. Unless otherwise permitted, use templates to control vertical spudding.

Mark the distance from the top of the spud clearly at 2 ft (600 mm) intervals along the length of the stem.

Use either round or square spud tips for pile driving that meet the following requirements:

- At least as large as the pile to be driven at the spudding location
- If round, no more than approximately 2 in (50 mm) larger than the diameter or diagonal dimension of the pile
- If square, no more than approximately 2 in (50 mm) larger than the lateral dimension or diameter of the pile

H. Jetting Equipment

Provide enough pumping capacity, using at least two jets, to produce a volume and pressure that will freely erode the material next to the pile and the material 6 in (150 mm) below the pile tip.

I. Loading Test Equipment

Furnish the necessary material, tools, equipment (including a constant tension wire with a weight and sheave or a weight and round pin), and incidentals to properly install the complete loading test and a temporary shelter over the area if the Engineer requires it.

520.3.03 Preparation

A. Remove Obstacles

Unless otherwise permitted, remove or cut out portions of obstacles that interfere with attaining the PDO. This will be measured and paid for as described in Subsection 520.4.01.A, “Removing Obstacles.”

B. Form the Embankment at Bridge Ends

Before driving piling at bridge ends and unless otherwise shown on the Plans, form the embankment as follows:

1. Make the embankment at bridge ends full depth to the subgrade template except for the stage construction providing a bench for the end bent.
2. Thoroughly compact the embankment as provided in the Specifications.
3. When the Plans or Special Provisions require a waiting period, delay the construction of all or portions of the bridge as required.

The minimum acceptable length of completed full-depth embankment is specified in Subsection 101.11, “Bridge.”

520.3.04 Fabrication

General Provisions 101 through 150.

520.3.05 Construction

A. Determine the Pile Length

Use full-length piling when possible, but always use full-length timber piling. Use piling long enough to reach the PDO.

Except for test piles shown on the Plans, pile lengths are based on the lengths assumed to remain in the completed structure.

Provide fresh headings and the additional length necessary to suit the method of operation at no additional expense to the Department. Pile lengths or quantities shown on the Plans are for estimating purposes only.

The Engineer's "Length List" will be available only after the test piles that logically cover the listed bents have been driven and evaluated and required load tests have been performed. The written "Length List" itemizes the number, type, size, and length of pile required per bent.

1. Steel H-Piling or Metal Shell Piling Lengths

   Determine and furnish the required lengths of piling in place to reach the PDO, regardless of whether the Plans require test piles or show estimated lengths.

   To determine these lengths of piling in place, either drive test piles, make borings, or make other investigations at no additional expense to the Department.

2. Timber Piling Lengths

   Have the Department determine the lengths of this piling. Furnish the piling either according to the Plan listing or according to the Engineer's "Length List," as directed.

   Lengths for timber piling up to 40 ft (12 m) will be given in 1 ft (300 mm) increments.

   Lengths for timber piling over 40 ft (12 m) will be given in 2 ft (600 mm) increments.

3. Prestressed Concrete Piling Lengths

   Have the Department determine the lengths of this piling. Furnish the piling according to the Plan listing or the Engineer's "Length List," as directed.

   Lengths for prestressed concrete piling 18 in (450 mm) square or smaller will be given in 2-1/ 2 ft (750 mm) increments.

   a. **Additional Lengths for Prestressed Concrete Piling.** If a prestressed concrete pile, including test pile, is driven below cutoff elevation before reaching the PDO, the Engineer will determine the net additional length required and add this extension length to the written "Length List."

   b. **Composite Prestressed Concrete Piling Lengths.** The composite pile length of composite prestressed concrete piling (with steel H-section tips partially embedded in and partially protruding from the concrete), is the end-to-end length of the concrete.

      The total length of the steel H-section and its embedded and protruding tips is as shown on the Plans. The steel sections are incidental to the work.

B. Drill Pilot Holes

When pilot holes are required, drill them to the diameter and approximate depth specified on the Plans.

Backfill voids and holes with sand or other suitable granular material, or other material as indicated on the Plans. This backfill is an incidental part of the work.

The following are not considered pilot holes:

- Holes created by spudding (punching)
- Holes dug to drive piling that is too long to fit leads
- Holes dug to replace a template (if permitted)

Where pilot holes are required in granular material and the material cannot be sealed off using "mudding" drilling methods, drill the pilot hole as follows:

1. Place a casing pipe with a large enough diameter around the boring device.
2. Hold the casing in position until the pilot hole is completed and the pile driving progresses deep enough into the hard material to keep loose material out of the pilot hole.

Drilling pilot holes using casing is incidental to the work.

C. Test Piling

The Plans will normally require test piles only with timber and prestressed concrete piling, including composite piling. However, the Department may require steel H or metal shell test piles.

When the Plans show the design load of a pile as well as a PDO, the design load is shown only for information purposes if a loading test is required.

Ensure that the piling to be loaded is of the size and type and at the locations specified on the Plans or designated by the Engineer.

The Engineer may revise the quantity or location of the Department's test piles.

The Department may designate locations on the Plans where the Engineer will record pile driving data during driving operations. Such piles are designated as "Driving Data Piles."

Follow these requirements when driving:

- Ensure that the cross-sectional dimensions of test piles are the same as the piles that will be part of the completed structure.
- Test piles are generally longer than piles that remain in the completed structure. Regardless of the PDO, drive test piles to their full length, where possible, for exploratory purposes.
- Drive test piles of the length, type, and size designated on the Plans in the locations the Engineer specifies.
- When using timber test piles, peel the piles and drive them next to the piles that will be part of the completed structure. If desired, machine-peel timber test piles and leave them untreated.
- Drive other types of test piles so that they become part of the completed structure.
- Ensure that test piles furnished and driven in permanent locations meet the requirements in Subsection 520.3.05.D.1, "Determine Driving Resistance," and Subsection 520.3.05.A.1, "Steel H-Piling or Metal Shell Piling Lengths."
- Drive test piles to determine required lengths in the Engineer's presence.
- Cooperate with the Engineer to obtain the required data on "Driving Data Piles" as an incidental part of the work. "Driving Data Piles" do not need to be driven before other piling.

D. Evaluate Bearing Capacity

Determine the bearing capacity of piling by determining driving resistance, performing loading tests, or doing a combination of these.

Determine driving resistance for all piling driven regardless of PDO requirements.

1. Determine Driving Resistance

   Drive a pile in one continuous operation and determine the driving resistance without delays. However, in soft material the Contractor may, at the Engineer's discretion, determine the driving resistance after delaying driving operations.

   Determine the driving resistance of the piling using the appropriate formula for the hammer type. These resistance formulas apply only when:

   - The hammer has a free fall.
   - The head of the pile is not broomed, crushed, spalled, or excessively crimped.
   - The penetration rate is reasonably uniform.

Determining driving resistance by formula is not a Pay Item. Provide the facilities for determining driving resistance by formula as an incidental part of the work.

Driving Resistance Formulas		
Hammer Type	**Formula Number**	**Formula (DR =)**
Gravity hammer	1	$\frac{2WH}{S + 0.7}$
Single-acting steam (or air) hammer; open-end diesel hammer	2	$\frac{2WH}{S + 0.2}$
Double-acting, enclosed-ram diesel hammer	3	$\frac{2E}{S + 0.2}$
Double-acting steam (or air) hammer	4	$\frac{2(W + Ap)H}{S + 0.2}$
NOTE: Do not use the manufacturer's bearing chart unless it agrees with the applicable formula above.		

Driving Resistance Formulas (metric)		
Hammer Type	**Formula Number**	**Formula (DR =)**
Gravity hammer	1	$\frac{0.167WH}{S + 17.8}$
Single-acting steam (or air) hammer; open-end diesel hammer	2	$\frac{0.167WH}{S + 5.08}$
Double-acting, enclosed-ram diesel hammer	3	$\frac{0.15E}{S + 5.08}$
Double-acting steam (or air) hammer	4	$\frac{0.166(W + A)Hp}{S + 5.08}$
NOTE: Do not use the manufacturer's bearing chart unless it agrees with the applicable above formula.		

The abbreviations in the driving resistance formulas are defined as follows:

Driving Resistance Formula Abbreviations	
Abbreviation	**Meaning**
DR	Driving resistance in tons (kilonewtons).
W	Weight of the striking part of the hammer in tons (newtons).
H	Height of fall in feet (meters) for gravity, steam, and air hammers. When using Formula 1, the maximum height is 10 ft (3 m) for timber piling and 12 ft (3.7 m) for steel H or metal shell piling.
	Observed average height of fall in feet (meters) for open-end diesel hammers. Record "H" as the average penetration in inches (millimeters) per blow being determined. When rating open-end diesel hammers to comply with energy requirements, use the height of fall as 8 ft (2.4 m).

Driving Resistance Formula Abbreviations	
Abbreviation	**Meaning**
E	Average equivalent energy in foot-tons (newton-meters) for enclosed-ram diesel hammers. Measure "E" as the average penetration in inches (millimeters) per blow being determined using a gauge attached to the hammer.
A	Area of piston in square inches (meters) for double-acting steam or air hammers.
p	Pressure at the hammer in tons per in² (pascals) for double-acting steam or air hammers.
S	Average penetration in inches (millimeters) per blow for the last 5 to 10 blows for a gravity hammer and the last 10 to 20 blows for a power hammer.

2. Perform Loading Test

   Unless otherwise specified on the Plans, use a test method that conforms to ASTM D 1143, modified for quick load tests.

   Use loading apparatus capable of the lesser value of the following:

   - For concrete piles, 400 percent of the design load or 500 tons (4450 kilonewtons)
   - For steel piles, 400 percent of the design load or 90 percent of the yield strength

   The Engineer may increase or decrease the number of loading tests.

   Furnish and read the instrumentation necessary to determine the pile settlement under load.

   A loaded pile is unsatisfactory when the total settlement under 200 percent of the design load exceeds 1 in (25 mm) or the permanent settlement exceeds 1/4 in (6 mm) using the standard loading procedure in ASTM D 1143 Section 5.

   The laboratory will determine the maximum safe design load or the failure load of original loading materials based on the results of the loading test.

   The Engineer may require the following piles to be driven further:

   - Unsatisfactory piles as defined in the paragraphs above
   - Piles without enough maximum safety design or failure loads as determined by the Office of Materials

   Perform the loading test as follows:

   a. Test load piling as required on the Plans, or as directed by the Engineer.
   b. Furnish and drive the piling to be test loaded.
   c. Furnish and drive necessary anchor piling.

      When the Engineer permits, use piling that will remain in the completed structure after load testing as anchor piles when desired.
   d. Apply the test loads in equal increments of 10 to 15 percent of the design load.
   e. Apply the loads at constant 2-1/2-minute time intervals throughout the test.
   f. After the test is complete, remove the temporary materials. These temporary materials remain the Contractor's property.
   g. Remove or cut off the piling that will not remain in the completed structure.

      Cut off the piling at least 1 ft (300 mm) below the bottom of the footing or the ground line, whichever applies.
   h. In deep water, have the Engineer direct how much pile to remove.

E. Drive Piling

Drive piling to the PDO shown on the Plans. When the PDO involves only a driving resistance requirement, the Engineer will determine the depth to drive piling. If there is no Plan PDO, drive the piling as directed by the Engineer.

If the Engineer determines that driving results and loading test results require modification, drive the piling to a PDO modified by the Department.

Drive piling as follows:

1. When using pilot holes, drive the piling enough to fix the point firmly and reach the PDO.
2. Drive piling so that it conforms closely with the position and line shown on the Plans.
3. Drive piling of a given type, including test piles, with the same type and size of hammer.
4. Use vibratory or other pile driving methods only when permitted by Special Provisions Plan Notes or directed by the Engineer.
5. Do not damage piling during driving. Pile damage includes:
   - Crushed, spalled, or cracked concrete
   - Split, splintered, or broomed wood
   - Broken piling
   - Shell collapse
   - Steel deformation
6. Do not force piling into the proper position.
7. When driving a prestressed concrete pile, ensure that the pile point is well-seated with reasonable soil resistance before using full driving energy.
8. Determine the driving resistance when driving the pile using the appropriate Driving Resistance Formula.

F. Excavate and Redrive

Do not drive foundation and end bent piling until excavation is nearly complete.

If driving a test pile to the side (one that will not become part of the structure) have it begin penetration at approximately the same ground elevation as if it were driven within the structure.

Redrive piles that are raised or moved while driving adjacent piling.

G. Jet and Spud

Jetting and, unless otherwise noted in the Contract, spudding are considered incidental to the Work.

Unless otherwise permitted by the Engineer, do not jetting or spudding operations lower than 3 ft (900 mm) above the estimated final elevation of the pile tip, or lower than 3 ft (900 mm) above the specified Minimum Tip Elevation to obtain minimum penetration.

When jetting or spudding to drive a prestressed concrete pile, ensure that the pile point is well seated with reasonable soil resistance at the point before using full driving energy.

1. Jetting

   When the Engineer permits, use jetting to properly position a pile. Additional driving may be required to determine the final driving resistance when piles are positioned by jetting.

   Should additional driving require additional length, the additional expense involved is considered incidental to the Work.

   Jetting may be required with any hammer or piling type (including test piling) and at any site. However, jet only when directed or permitted by the Engineer and as follows:

   a. Do not use jets where the Engineer determines that the jets may endanger the stability of embankments or other improvements.
   b. Perform trial jetting to determine whether to jet using one or two jets. Have the Engineer approve the trial run.
   c. Suspend the pile driving that requires jetting until the jetting is accomplished as directed by the Engineer.
   d. Jet either ahead of the actual pile driving or simultaneously with it as the Engineer determines from the results of trials.

      Control and dispose of water and solids that run off from the jetting.
   e. Maintain parallel drainage to railroad tracks.

f. Do not simultaneously drive and jet a prestressed concrete pile unless there is reasonable soil resistance at the pile point.

g. If using jets and hammers simultaneously as required or permitted by the Engineer, withdraw the jets before reaching the PDO and continue driving to fix the point of the pile firmly and reach the PDO.

h. After jetting an area completely, recheck the driving resistance of questionable piles.

2. Spudding

If the Plans or Engineer require spudding, do it to facilitate driving.

The Engineer may require advance jetting exploration before deciding whether or not spudding is necessary to penetrate firm or hard material.

H. Cut Off, Splice, and Extend Piling

Cut off pilings at the required elevation. Splice piling driven below this elevation and extend it according to the Pile Splice Details. Ensure that the minimum splice spacing is at least 10 ft. (3 m).

Lengths of cutoff of any piling, including test piles, remain the property of the Contractor. Dispose of cutoff lengths outside the highway right-of-way according to Subsection 104.07, “Final Cleaning Up.” If desired, use undamaged pieces of steel H and metal shell cutoff for splice plates, extensions, and reinforcement for steel H-tips.

1. Cut Off Prestressed Concrete Piling

Cut prestressed concrete piling using pneumatic tools, saws, or other approved methods as follows. Do not use explosives.

When the Engineer considers it necessary, use an approved collar when cutting.

a. Cut back the required amount of concrete at the end of the pile to be extended, leaving the prestressed strand exposed.

b. Make the final cut at right angles to the pile axis.

c. When cutting, avoid spalling or damaging the pile below the cutoff elevation.

d. If the pile is damaged, replace the pile or repair the damage by cutting back to the extent determined by the Engineer. Replace or repair piles at no expense to the Department.

2. Extend Prestressed Concrete Piling

Driven extensions of prestressed concrete piling shall consist of Class AAA concrete. Undriven extensions shall consist of Class A concrete.

Extend prestressed concrete piling as follows:

a. Build, place, and brace the form work for the extension carefully to obtain true alignment and prevent leaks at the construction joint.

b. Just before placing the new concrete, thoroughly wet the cut area and cover it with a thin coating of cement paste.

c. When driving the extension, chamfer the top 1 in (25 mm) at right angles to the extension axis.

d. Remove the forms and cure and finish the concrete according to Subsection 865.2.01.B.10, “Concrete Curing” and Subsection 500.3.05.Z, “Cure Concrete.”

e. When extending prestressed concrete piling, comply with the required details when additional driving is or is not necessary after making the extension.

When additional driving is necessary, ensure that the extension reaches its 28-day compressive strength and has been water-cured for 5 curing days before resuming driving. The delay is considered incidental to the Work.

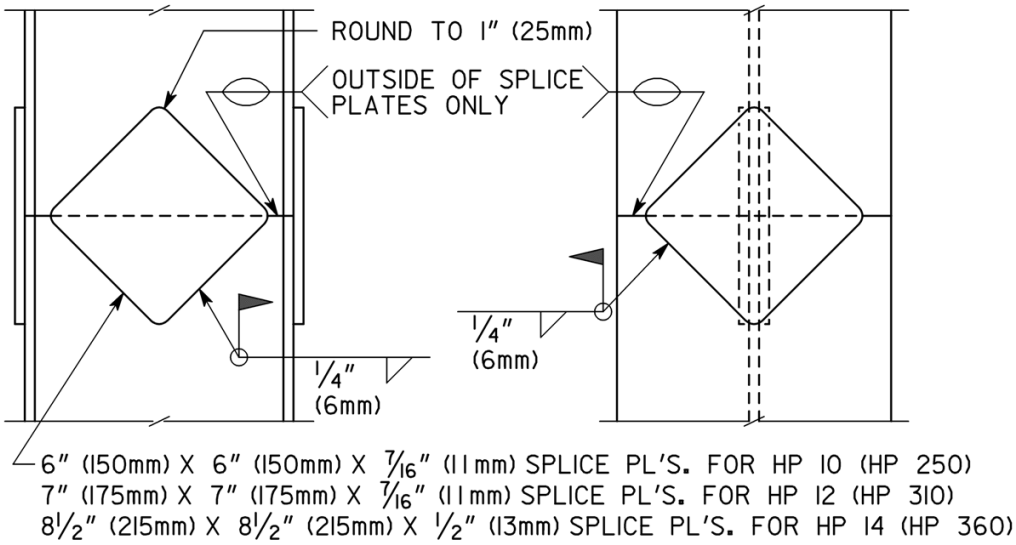

STEEL H PILING

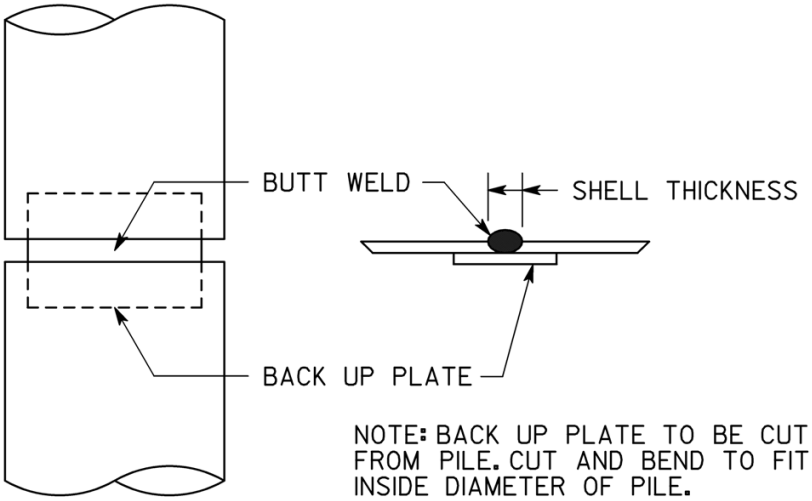

METAL SHELL PILING

Figure 1

3. Splice and Extend Steel H-Piling and Metal Shell Piling

   Splice and extend steel H-piling or metal shell piling before, during, or after driving according to the Pile Splice Details [Figure 1]. Ensure that the sections have identical cross sections.

   Instead of using the splice details for H-piles shown in the Pile Splice Details (Figure 1], when desired, use approved H-pile splicers as follows:

   a. Ensure that H-pile splicers are the proper size recommended by the manufacturer for the pile to be spliced.
   b. With the splicer in position and before making the splice, ensure that at least 90 percent of the mating ends of the piling to be spliced touch.
   c. Connect the splicer and the piling by welding according to a procedure approved by the Department.

4. Cut Off and Splice Timber Piling

   Accurately cut off piling to be capped with timber or precast concrete to obtain true bearing on every pile without using shims.

   Replace or repair piles inaccurately cut off at no additional expense to the Department. Replace or repair to the Engineer's satisfaction.

   Do not splice timber piling without the Engineer's permission.

I. Weld Steel Piling Splices and Swaybracing Attachments

Weld steel piling splices and swaybracing attachments according to Section 501.3.06.C.

Weld only in the Engineer's presence. Use a welder with current Department certification for welds involved.

J. Repair and Treat Timber Piling

Repair and treat timber piling as follows:

1. Field treat cuts and abrasions in treated timber piling with either of these heated treatments:
   - Two applications of a mixture of 60 percent creosote oil and 40 percent roofing pitch
   - Two thorough brush coats of creosote oil followed by a covering of roofing pitch

   Allow each coat to dry before applying the next.
2. Before placing bolts, field treat holes made after treating with hot creosote oil.
3. Plug unused holes with treated plugs after the field treatment.
4. When the approved use of temporary forms or braces causes nail or spike holes in treated piling, fill the holes using either of these methods:
   - Drive galvanized or aluminum nails or spikes flush with the surface.
   - Plug the holes with treated plugs after the field treatment.
5. Field treat treated piling heads used in permanent structures that will not be encased in concrete footings or caps after cutoff:
   a. Treat the sawed surfaces with either of these heated treatments:
      - Three applications of a mixture of 60 percent creosote oil and 40 percent roofing pitch
      - Three thorough brush coats of creosote oil followed by a covering of roofing pitch.
      - Allow each coat to dry before applying the next.
   b. Cover each pile head with a minimum 28-gauge (0.015 in [0.38 mm] thick) metal.
      - The metal may be aluminum or galvanized steel. However, aluminum is preferred.
      - Trim the metal neatly.
      - Bend the metal down around the pile and fasten it to the side using large-headed aluminum or galvanized roofing nails.

K. Bolt Timber Bracing

Bolt permanent timber bracing at its intersections with piles using standard steel bolts and nuts and cast or malleable iron ogee washers. Refer to Subsection 520.2 "Materials"

1. Place an ogee washer under the bolt head and under the nut.
2. Ensure that the diameters of the bolt and the drilled hole are each 3/4 in (19 mm).
3. After adjusting the nuts, burr the bolt threads.

L. Use Prestressed Concrete Piling

Piles cracked in transportation, handling, or storage may be rejected by the Engineer as defective piles if the cracking indicates structural damage.

Piles with cracks that are not structurally damaging that will not be used in sea water or alkali soils may be accepted by the Engineer if the cracks close and are not visible when the pile is in the leads.

When using prestressed concrete piling, comply with the following:

- Do not drive prestressed concrete piles until they reach a minimum strength of 5,000 psi (35 MPa) and a minimum age of 5 days.
- Form vent holes for voided-type piles in one face of each pile at approximately 5 ft (1.5 m) on the centers. Ensure that these holes remain open permanently.
- After completing the driving, cut back and point over cable loops used as embedded pick-up points that remain above the ground or water line.

M. Use Metal Shell Piling

Metal shell piling consists of steel shells filled with Class A concrete after they are driven in place and cut off.

Ensure that the shell's minimum wall thickness is 1/4 in (6 mm) unless otherwise shown on the Plans. However, furnish shells thick and rigid enough that they can be driven to the PDO without crimping, buckling, or distorting.

The Contractor may use either of the following:

- Shells of constant section
- Shells that meet the requirements of Subsection 855.2.02, "Fluted Steel Shell Pile"

Use metal shell piling as follows:

1. Drive metal shell piling closed-ended.
2. Unless the Plans specify another detail, construct the end closure according to Option 1 of the Closure Plate Detail [Figure 2] so that the closure plate does not project beyond the outside diameter of the pile.
3. After driving, keep the tops of shells covered until the concrete is placed.
4. Ensure that driven shells are clean and free of water immediately before placing concrete. Use a suitable light to inspect the entire length of the shell in place.
5. Before placing concrete, examine the shells for collapse or diameter reduction.

   Shells that are broken or are collapsed enough that bearing capacity is materially decreased will be rejected as defective piles.

   Fill rejected shells that cannot be removed with Class A concrete at no expense to the Department.
6. When reinforcement steel is required, rigidly assemble and lower it into the shell so that its position is correct during concrete placement.

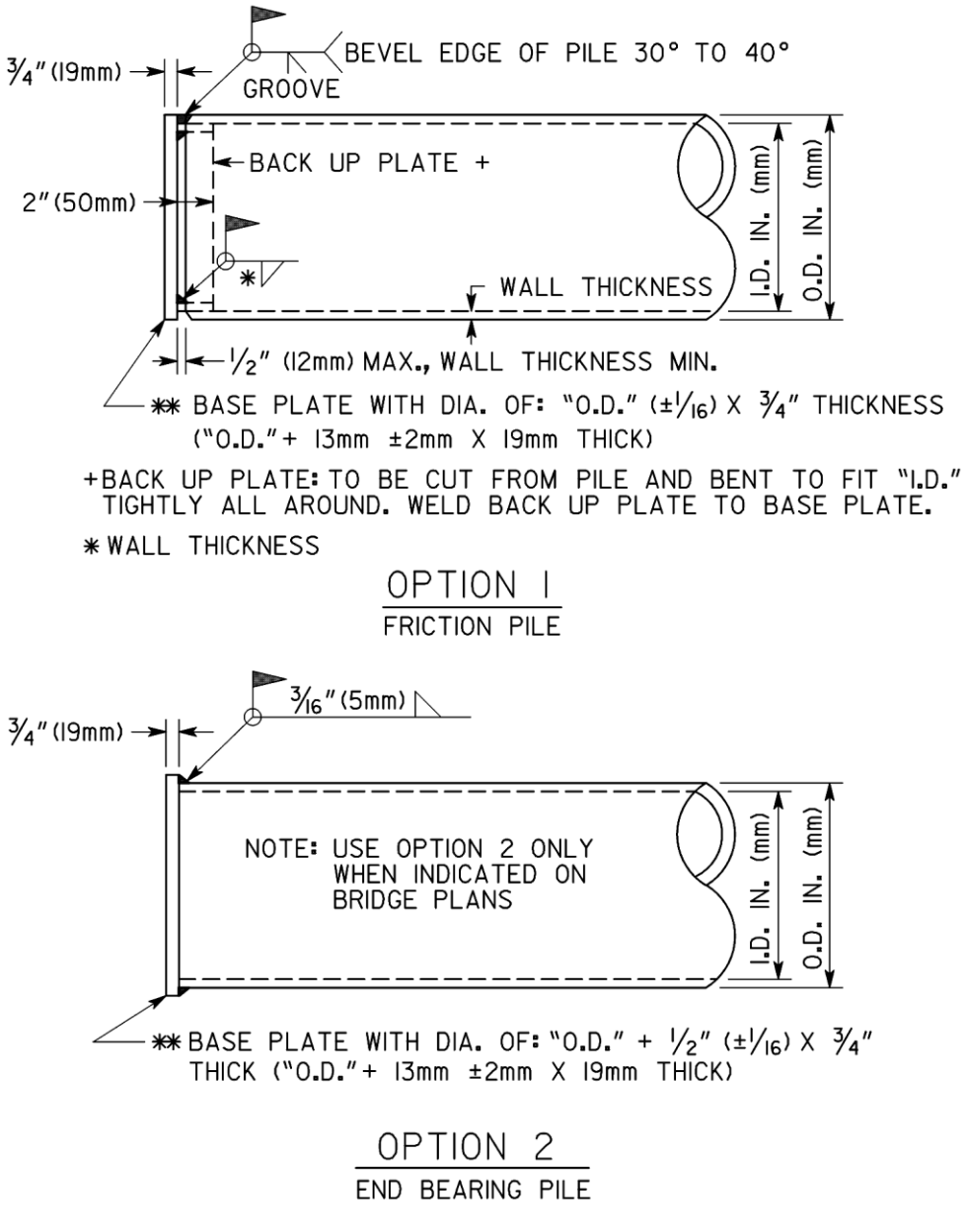

OPTION 1

FRICTION PILE

OPTION 2

END BEARING PILE

** BASE PLATE: NO MILL TEST REPORT REQUIRED. PLATES WILL BE ACCEPTED ON THE BASIS OF VISUAL INSPECTION

Figure 2

7. Ensure that there are no loose reinforcement steel bars.
8. Do not place concrete in the shells until completing driving within a 30 ft (9 m) radius or until driving shells in any one bent or footing.

   If this is not possible, stop the driving within the radius limit until the concrete in the last shell filled reaches a minimum strength of 2,000 psi (14 MPa).

   The Engineer may adjust the 30 ft (9 m) limit according to the prevailing vibration conditions.
9. Place concrete in the shells continuously from tip to butt. Where shells contain reinforcement steel, use tremies to pour the concrete.
10. For shells in trestle bents, mechanically vibrate the concrete starting approximately 10 ft (3 m) below the ground and working up.
11. For shells in footings, mechanically vibrate the concrete for approximately 25 ft (7.5 m) downward from the top of the shell pile.
12. Pour footings and trestle bent caps at least two hours after filling the last shell in the footing or trestle bent with concrete.

N. Use Steel H-Piling

Wherever the Plans require HP 14 in by 73 lb (360 mm by 108 kg) steel H-piling, the Contractor may substitute HP 13 in by 73 lb (330 mm by 109 kg) steel H-piling and, as appropriate, 13 in (330 mm) pile tip reinforcement for bearing pile in footings. Do not make this substitution for pile bents. Do not change the Contract Bid Price to make the substitution.

Do not cut or trim steel H-piling to fit into an improperly sized steel driving head. Instead, replace the head with one that conforms to the requirements of Subsection 520.3.02.B, “Driving Head.”

Place swaybracing members as shown on the Plans or as required by the Engineer and weld it according to the Swaybracing Attachment Detail [Figure 3].

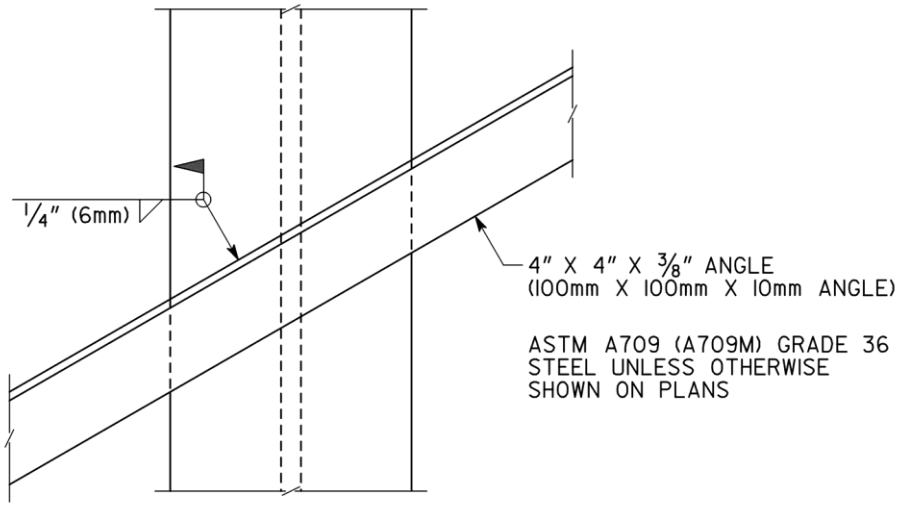

SWAYBRACE ATTACHMENT DETAIL

Figure 3

If steel H-piles are not driven in the position and to the alignment required, the Engineer may require fills and shims between the bracing and the pile flanges as an incidental part of the Work.

O. Coat and Paint Piling

Apply a special protective coating as described below to steel H-Piling, metal shell piling, steel swaybracing, and when specified, PSC piling. Clean and paint the piling according to Subsections 535.3.03.A, "Clean New Steel Structures," and Subsection 535.3.05.E, "Paint Steel H-Piling, Metal Shell Piling, and Steel Swaybracing."

1. Coating Requirements for End-Bent Piling

   Clean end-bent piling and coat it with a System IV paint for 2 ft (600 mm) below the bottom of the cap.

   As an alternate to coating, pour a concrete collar 2 ft (600 mm) deep with a 3 in (75 mm) cover around the pile.

2. Coating Requirements for Structures Crossing Streams

   Coat pilings as follows:

   a. **Piles Not Encased.** For piles within the stream and within 10 ft (3 m) of the top of the stream bank, extend the coating required in Subsection 520.3.05.O.1, "Coating Requirements for End-Bent Piling" for 5 ft (1.5 m) below the stream beds.

      Give piles a protective coating 5 ft (1.5 m) below ground line for bents more than 10 ft (3 m) outside each stream bank.

   b. **Piles Encased.** For piles that will be encased according to Section 547, extend the System IV paint 12 in (300 mm) below the top of the encasement.

3. Coating Requirements for Grade Separation Structures

   For grade separation structures, extend coatings for intermediate bent piling to 5 ft (1.5 m) below the finished ground line.

520.3.06 Quality Acceptance

A. Reaching the PDO

The Engineer is solely responsible for determining whether the PDO has been reached satisfactorily.

B. Driving Corrections

Correct driving deviations that exceed 3 in (75 mm) from either the position or the line shown on the Plans as directed by the Engineer.

Do not allow the pile heave from driving nearby piling to exceed 1/4 in (6 mm) without retapping.

C. Correcting Rejected Piles

Rejected piles are:

- Unable to meet material certification
- Damaged by internal defects or by improper driving
- Driven out of proper location as described in Subsection 520.3.06.B, "Driving Corrections".
- Incorrectly driven below the elevation fixed by the Plans or the Engineer
- Excessively crimped in driving (steel piling)

If cracks develop in a prestressed concrete pile that do not classify the pile as defective, seal the cracks with an approved epoxy crack sealer at no expense to the Department. Place the sealer as directed by the Engineer.

If a pile is driven excessively out of position or below cutoff elevation through no fault of the Contractor, correct it using the method designated by the Engineer at the Department's expense.

Correct rejected piling at no expense to the Department using one or more of the following methods approved for the pile:

1. Extract the pile and replace it with a new one.
2. Drive a second pile next to the defective pile.

3. Cut off the pile to obtain a fresh heading, splice it, and extend the pile according to Subsection 520.3.05.H, "Cut Off, Splice, and Extend Piling."
4. Extend the footing or cap concrete to embed the pile properly and change the bar reinforcement steel as required.
5. Delay the Work pending a design analysis (performed by the Contractor with a Department review) and make the corrections specified by the Engineer. The delay is considered incidental to the Work.

520.3.07 Contractor Warranty and Maintenance

A. Unused Piling (Prestressed Concrete or Timber)

Undriven and undamaged whole lengths of piling ordered by the Engineer will become the property of the Department.

Assemble and neatly stack the lengths as directed by the Engineer at a convenient location for loading on Department vehicles.

Guard the lengths against damage or loss for 10 days after notifying the Engineer in writing that the lengths are ready for loading. The 10-day period begins when the Engineer receives the notice.

520.4 Measurement

The items included in this work will be measured for payment as described in Subsection 520.4.01, "Limits."

520.4.01 Limits

A. Removing Obstacles

When the obstacle removed (see Subsection 520.3.03.A, "Remove Obstacles") consists of the structure being replaced, and the Department has previously paid for removing the structure, remove or cut the obstacle at no cost to the Department.

When the obstacle consists of another object below the original ground and its removal or cutting is necessary, the removal or cutting is measured as Extra Work if it is not covered by another Pay Item.

Cutting by spudding is not measured for payment.

B. Order Lengths

The Department will not recognize, accept, or pay any claim for adjusting the Contract Unit Prices because of underruns or overruns of estimated lengths or quantities of piling.

C. Test Piling

Accepted test piles required by the Plans or the Engineer are measured per each and paid for at the Contract Unit Price.

Accepted piles furnished and driven as test piles at the Contractor's option to determine order lengths are measured and paid for the same as for other piling in place of that type used in the completed structure.

Piling measured and paid for as test piles is not included in other measurement for payment.

There is no additional measurement for payment for "Driving Data Piles."

D. Steel H-Piling and Metal Shell Piling

These piling types are measured in linear feet (meters) of piling in place remaining in the completed work and will be paid for at the respective Contract Price. Measurement does not include piling measured as test piling.

Payment is full compensation for furnishing, driving, jetting, spudding, lining, filling with concrete, disposing of cutoffs, and painting, including special protective coatings.

Pile encasement will be paid for by the linear foot (meter) according toSection 547.5.

Steel swaybracing of steel H-piling will be measured and paid for under Subsection 501.4, “Measurement” and Subsection 501.5, “Payment.”

E. Prestressed Concrete Piling and Timber Piling

These piling types are measured in linear feet (meters) of piling in place (plus an allowance for cutoff lengths noted in Subsection 520.4.01.F, “Cutoffs”) and paid for at the Contract Price. Measurement does not include piling measured as test piling.

Pay lengths will be based on the Engineer’s pile order length.

Payment is full compensation for furnishing, driving, jetting, spudding, lining, disposing of cutoffs, and placing special protective coatings on prestressed concrete piling, if required.

For timber piling, this payment is also full compensation for the costs of furnishing, placing, and removing temporary bracing necessary to hold the piles in alignment.

The pay quantity includes prestressed concrete piling extensions (see Subsection 520.4.01.G.2, “Extensions”).

F. Cutoffs

No separate payment will be made for cutting off pile or for using the cutoff lengths of steel H or metal shell piling.

However, cutoff undamaged pieces of steel H or metal shell piling used to make other piles or used as extensions will be paid for as piling in place, described in Subsection 520.4.01.D, “Steel H-Piling and Metal Shell Piling,” Subsection 520.4.01.G, “Splices and Extensions,” and Subsection 520.4.01.G.2, “Extensions.”

G. Splices and Extensions

All extensions and splices are measured and paid for the same way, whether or not the pile is a test pile.

Splicing and extending timber piling, if allowed, will be measured and paid for as Extra Work according to Subsection 109.05, “Extra Work.”

1. Splices

   For any pile including test piles, each splice per steel H or metal shell pile provided for in the Splice Tabulations will be included in the pay quantities and paid for as a Specification allowance of piling in place in the amounts of 4 linear ft (1.2 m) for steel H-pile and 2 linear ft (600 mm) for metal shell pile.

   When the original length of a Department test pile is increased by the Engineer after being driven, each splice required as ordered and accepted is measured for payment in the amount provided above. Other steel pile splices, including others made on test piles, will be performed at the Contractor’s expense.

   For prestressed concrete piling, each splice ordered and accepted (except those required because of Contractor negligence) will be measured and paid for as a Specification allowance of 5 linear ft (1.5 m) of piling. This payment compensates for the costs of making the actual splice within the limits of the cut-back portion. Include uncompensated costs in the overall bid submitted.

Splice Tabulations	
Steel H or Metal Shell Piling	
In Place Length	**Maximum Pay Splices (If Made)**
60 ft (18 m) or less	None
Above 60 ft (18 m) through 90 ft (27 m)	1
Above 90 ft (27 m) through 120 ft (36 m)	2
Above 120 ft (36 m) and up	3

   Splices will be paid for only when performed.

2. Extensions

   The extension of a prestressed concrete pile, including test piles, will be the net length ordered by the Engineer measured from the original pile head to the extended head. This extension is measured as piling.

   The actual splice within the cutback portion is measured separately as specified in Subsection 520.4.01.G.1, "Splices."

   Extensions required because of the Contractor's negligence are not measured for payment.

   The Engineer will determine the length of extensions for the Department's steel H or metal shell test piling. These extensions will be paid for as piling in place according to Subsection 520.4.01.D, "Steel H-Piling and Metal Shell Piling."

H. Alternate to Extending Test Piling

Instead of extending a prestressed concrete test pile that requires additional driving to reach the PDO (as provided in Subsection 520.4.01.G.2, "Extensions."), the Engineer may give the Contractor the option of abandoning the pile as a test pile as far as measurement and payment are concerned.

If the Contractor chooses this option, the Engineer will allow the Contractor to drive a substituted, longer pile of the required length as the test pile at another location selected by the Engineer.

The Engineer will determine the net additional length required. This additional length will be paid for as piling with no splice allowance.

Complete the abandoned test pile, which is measured the same as nontest piles.

The Engineer will not allow the option if the driving data obtained is sufficient or if a loading test is needed instead of further driving.

I. Loading Tests

The number of loading tests completed and accepted will be measured and paid for per each at the Contract Price.

Any loading test or additional stage of loading abandoned because of Contractor fault will not be measured.

J. Cast Steel H-Pile Points

Cast steel H-Pile points of the type and size designated on the Plans are measured per each.

K. Pilot Holes

Pilot holes drilled and accepted as a Contract Item are measured per linear foot (meter) from the natural ground (intermediate trestle bents) or from the bottom of concrete, whichever applies. Pilot holes will be paid for at the Contract Price.

Pilot holes not required by the Plans but made at the request of the Engineer will be measured and paid for as Extra Work according to Subsection 109.05, "Extra Work."

L. Composite Prestressed Concrete Piling

No separate payment will be made for furnishing and driving steel H-pile sections partially embedded in and partially protruding from prestressed concrete piling, including test piles.

M. Unused Prestressed Concrete or Timber Piling

Unused prestressed concrete or timber piling will be paid for at invoiced cost, including transportation plus 10 percent.

520.5 Payment

This work will be measured and paid for at the Contract Prices, complete in place.

Payment is full compensation for all costs of complying with these Specifications, including incidentals and additional work.

Payment will be made under:

Item No. 520	Piling in place, (type), (size)	Per linear foot (meter)
Item No. 520	Piling, (type), (size*)	Per linear foot (meter)
Item No. 520	Test pile, (type), (size*)	Per each
Item No. 520	Loading test, (type), (size*)	Per each
Item No. 520	Pilot holes	Per linear foot (meter)
Item No. 520	H-pile points (type), (size)	Per each
Item No. 520	Cast steel H-pile points (type), (size)	Per each
*For timber piling, size will be omitted.		

520.5.01 Adjustments

A. Test Piles

No deduction will be made when a required test pile underruns in length with the Engineer's consent.

When a required test pile overruns in length with the Engineer's consent, see Subsection 520.4.01.G.1, "Splices."

B. Cutoff Allowances

Cutoff allowances exclude test piling.

Cutoff allowances will be made for each excess linear foot (meter) removed to achieve the cutoff elevation as follows:

- For timber piling, the cutoff allowance is 50 percent of the Contract Price.
- For prestressed concrete piling, the cutoff allowance is 75 percent of the Contract Price.

C. Loading Tests

If the loaded pile does not carry the load satisfactorily after the load is placed and it is necessary to redrive and reload the pile, this reload constitutes an additional stage of loading but not an additional loading test.

Each additional stage of loading made and accepted on any single pile as specified will be measured and paid for as 50 percent of a loading test.

Section 521—Patching Concrete Bridge

521.1 General Description

Specifications for this work will be included elsewhere in the Contract.

Section 522—Shoring

522.1 General Description

This work consists of furnishing, placing, maintaining, and removing all materials and equipment required for shoring as shown on the Plans and as described in other Special Provisions. It also includes all incidentals and additional work related to shoring.

522.1.01 Definitions

General Provisions 101 through 150.

522.1.02 Related References

A. Related Specifications

General Provisions 101 through 150.

B. Referenced Documents

General Provisions 101 through 150.

522.1.03 Submittals

A. Drawings

The Engineer may require the Contractor to submit drawings of the proposed shoring for review. If this is required, the Contractor shall not start work until the Engineer completes the review. The review will not relieve the Contractor of responsibility for the adequate and safe performance of the shoring.

522.2 Materials

Use materials that meet the requirements of the Plans and Specifications.

The Contractor retains ownership of all shoring materials.

522.2.01 Delivery, Storage, and Handling

General Provisions 101 through 150.

522.3 Construction Requirements

522.3.01 Personnel

General Provisions 101 through 150.

522.3.02 Equipment

General Provisions 101 through 150.

522.3.03 Preparation

General Provisions 101 through 150.

522.3.04 Fabrication

General Provisions 101 through 150.

522.3.05 Construction

A. Shoring Design

Ensure that shoring is structurally adequate to withstand forces including the following:

- Forces and pressures resulting from excavation
- Forces and pressures of surcharge loads from adjacent structures, roadbeds, tracks, slopes, and equipment

B. Work Standards

Ensure this work conforms to the Sequence of Construction outlined on the Plans and in the Special Provisions.

522.3.06 Quality Acceptance

General Provisions 101 through 150.

522.3.07 Contractor Warranty and Maintenance

General Provisions 101 through 150.

522.4 Measurement

This work is not measured separately for payment.

522.4.01 Limits

General Provisions 101 through 150.

522.5 Payment

This work will be paid for at the Contract Price for shoring complete in place, maintained, and removed.

Payment will be made under:

Item No. 522	Shoring	Per lump sum

522.5.01 Adjustments

General Provisions 101 through 150.

Section 523—Dynamic Testing of Pile

523.1 General Description

Specifications for this work will be included elsewhere in the Contract.

Section 524—Drilled Caisson Foundations

524.1 General Description

Specifications for this work will be included elsewhere in the Contract.

Section 525—Cofferdams

525.1 General Description

This work consists of designing, constructing, maintaining, dewatering, removing, and disposing of cofferdams, which are necessary for constructing substructures and for protecting personnel and adjacent structures, roadbeds, tracks, channels, slopes, or other property (public or private) whether on or off the Rights-of-Way from water, caving soil, and other dangers.

525.1.01 Definitions

General Provisions 101 through 150.

525.1.02 Related References

A. Standard Specifications

Section 109—Measurement and Payment

Section 211—Bridge Excavation and Backfill

Section 500—Concrete Structures

B. Referenced Documents

General Provisions 101 through 150.

525.1.03 Submittals

A. Drawings

The Engineer may require the Contractor to submit drawings of proposed cofferdams for review. If this is required, the Contractor shall not start work until the Engineer completes the review.

The review will not relieve the Contractor of the responsibility for providing an adequate and safe cofferdam.

525.2 Materials

Materials used in cofferdam construction may be of any type suitable for the design requirements and for the particular dam being constructed, subject to the Engineer's approval.

Earth dams, sand bags, or dams constructed using excavated materials are not considered cofferdam construction.

525.2.01 Delivery, Storage, and Handling

General Provisions 101 through 150.

525.3 Construction Requirements

525.3.01 Personnel

General Provisions 101 through 150.

525.3.02 Equipment

A. Pumps

Supply sufficient pumping capacity to dewater the cofferdam.

525.3.03 Preparation

General Provisions 101 through 150.

525.3.04 Fabrication

General Provisions 101 through 150.

525.3.05 Construction

A. Designing Cofferdams

Cofferdams shall be structurally adequate to withstand external and internal forces including the following:

1. Forces and pressures from an excavation depth of not less than 6 ft (1.8 m) below the elevation of the bottom of the footing
2. Forces and pressures from surcharge loads from adjacent structures, roadbeds, tracks, slopes, and equipment.

Design the cofferdam to meet these conditions:

- Cofferdams shall permit placing pumping equipment outside the footing forms.
- Cofferdams shall permit driving piling between braces.

B. Correcting Cofferdams

Correct to the Engineer's satisfaction cofferdams that tilt or move laterally during construction.

C. Lowering Cofferdams

Substructure elevations shown on the Plans are approximate; therefore, the Engineer may require that both substructures and cofferdams be lowered by a specified amount.

D. Dewatering Cofferdams

Try to dewater cofferdams without using seal concrete unless the Plans require seals.

1. Dewatering Cofferdams Without Seal Concrete

   Use all reasonable methods to provide a dewaterable enclosure, including the following:

   a. Drive all sheeting within the cofferdam to a depth of at least 1 ft (300 mm) below the bottom of the excavation.

   b. Provide a double-walled cofferdam lined with clay or other reasonably impervious material.

   The Engineer decides if the Contractor has used all reasonable methods to provide watertight cofferdams.

   If the enclosures are not dewaterable, and the Engineer decides the Contractor has not used all reasonable methods to provide watertight cofferdams, the Engineer may do either of the following:

   - Require the Contractor to place Seal Concrete at the Contractor's expense.
   - Permit the Contractor to place Seal Concrete at the Contractor's expense instead of trying further dewatering methods without a seal.

2. Dewatering Cofferdams with Seal Concrete

   If all reasonable methods to provide a dewaterable enclosure have been used and the Engineer determines that seal concrete is necessary, place the concrete as outlined in Subsection 500.3.05.V, "Place Seal Concrete."

   When using seal concrete, dewater the cofferdam no earlier than 24 hours after the concrete is placed unless the Engineer determines that a longer period is necessary.

E. Removing Cofferdams

Unless otherwise specified, completely remove all cofferdam material. This material shall remain the property of the Contractor.

525.3.06 Quality Acceptance

General Provisions 101 through 150.

525.3.07 Contractor Warranty and Maintenance

General Provisions 101 through 150.

525.4 Measurement

A. Measuring Cofferdams for Separate Payment

Cofferdams will be measured for separate payment only when set up as a Pay Item on the Plans.

Separate measurement will be made only for cofferdams constructed at the specific locations required on the Plans, regardless of cofferdams built at other locations within the limits of the structure and regardless of site conditions.

The Contractor may request permission to enclose more than one footing in a single cofferdam at a pay measurement location. If the Engineer approves, the number of cofferdams measured for payment will equal the number of footings enclosed within that single cofferdam.

If cofferdams are not set up as a Pay Item on the Plans and their use becomes necessary, they will not be measured for payment.

B. Measuring Lowered Cofferdams for Payment

The following restrictions apply to lowered cofferdams:

1. If lowering a footing requires lowering a separately measured cofferdam, lower the cofferdam enough distance to permit construction at an elevation not to exceed 6 ft (1.8 m) below Plan elevation at the Contractor's expense.
2. Any lowering of a cofferdam to permit construction at an elevation more than 6 ft (1.8 m) below Plan elevation will be paid for as Extra Work.
3. The Specifications intend that no Extra Work be paid for lowering a separately measured cofferdam until the Contractor completes the cofferdam to the extent that footings or substructure can be successfully constructed at an elevation no more than 6 ft (1.8 m) below Plan elevation.

   No Extra Work shall be done under this Item until the requirements of Subsection 109.05, "Extra Work" have been met.

525.4.01 Limits

General Provisions 101 through 150.

525.5 Payment

A. Cofferdams Measured for Separate Payment.

Each cofferdam eligible for separate measurement and payment will be paid for at the Contract Price per each, complete in place, maintained, dewatered, removed, and disposed of.

B. Cofferdams Not Measured for Separate Payment.

The cost of cofferdams not measured for separate payment will be included in the Contract Price for bridge excavation.

If lowering a footing requires lowering a cofferdam not measured for separate payment, the compensation for extra depth excavation provided for in Subsection 211.5.A, "Bridge Excavation", will be full compensation for the cost of lowering the cofferdam.

Payment for cofferdams eligible for separate measurement will be made under the following:

Item No. 525	Cofferdams	Per each

525.5.01 Adjustments

A. Partial Payment Adjustments

Partial payment for measured cofferdams will be made as follows:

1. After a satisfactory initial dewatering of the cofferdam, 75 percent of the Contract Price per cofferdam will be included in the next statement.
2. The remaining 25 percent will be included in the next statement after the satisfactory removal and disposal of the cofferdam.

B. Extra Work Qualifications

When the excavation elevation reaches 1.8(2 m) below the Plan elevation and the cofferdam is satisfactory (as determined by the Engineer) for dewatering to that elevation, then any lowering of the cofferdam to permit construction at an elevation more than 6 ft (1.8 m) below Plan elevation will be considered Extra Work.

Section 526—Steel Girder Flooring

526.1 General Description

Specifications for this work will be included elsewhere in the Contract.

Section 527—Bridge Rehabilitation

527.1 General Description

Specifications for this work will be included elsewhere in the Contract.

Section 528—Epoxy Pressure Injection of Concrete Cracks

528.1 General Description

This work consists of labor, material, equipment, and services necessary for repairing concrete cracks. The Plans will specify or the Engineer will determine the extent of repair. The work shall comply with the Specifications including Special Provisions where applicable.

528.1.01 Definitions

General Provisions 101 through 150.

528.1.02 Related References

A. Standard Specifications

Section 886—Epoxy Resin Adhesives

B. Referenced Documents

General Provisions 101 through 150.

528.1.03 Submittals

General Provisions 101 through 150.

528.2 Materials

Ensure epoxy used for crack repair complies with the requirements of Section 886, Type V epoxy adhesive.

Ensure epoxy used for sealing cracks at the surface is strong enough to withstand injection pressures up to 250 psi (2 MPa).

528.2.01 Delivery, Storage, and Handling

General Provisions 101 through 150.

528.3 Construction Requirements

528.3.01 Personnel

General Provisions 101 through 150.

528.3.02 Equipment

A. Injection Equipment

Ensure that dispensing equipment for the injection complies with the following performance requirements:

- Self-monitor pressures of 250 psi (2 MPa) for extended periods under flow.
- Maintain a ratio of accuracy of one percent at the required pressures.
- Mix in-line using a static mixing head.

When using screen wire, wire brushes, or other elements for mixing, provide independent certification that the material is mixing thoroughly at the flow rate and temperatures for the job. Also demonstrate that the unit will not dispense resin if the material line is blocked on the supply or dispense side of the system.

528.3.03 Preparation

Before repairing the cracks specified on the Plans, prepare the concrete surfaces next to the cracks by exposing clean and sound concrete.

The exact procedures for exposing clean and sound concrete shall be the Contractor's option and responsibility. However, the procedures must comply with any traffic handling and construction sequencing requirements for the Project.

528.3.04 Fabrication

General Provisions 101 through 150.

528.3.05 Construction

Seal concrete cracks as follows:

1. After preparing the concrete surfaces, seal the cracks at the surface with epoxy.

   Port spacing, location, and port type shall be the Contractor's option and responsibility.
2. If the voids are not thoroughly penetrated, use the following procedure:
   a. Wet core on 8 in (200 mm) centers the holes that are 1/2 in (13 mm) diameter and 3/4 in (19 mm) to 1 in (25 mm) depth.
   b. Insert into the cored holes to the full depth copper or plastic tubes 1/2 in (13 mm) diameter and notched at the base.
   c. Seal the circumference of the ports at the surface.
   d. Inject the epoxy at a constant pressure not to exceed 250 psi (2 MPa) for at least 10 minutes or until penetration occurs.
3. After the injection operation is complete, clean the sealed cracks to the original concrete surface.
4. Remove nipple devices and surface sealers over the injection holes.

528.3.06 Quality Acceptance

General Provisions 101 through 150.

528.3.07 Contractor Warranty and Maintenance

General Provisions 101 through 150.

528.4 Measurement

No measurement for payment will be made for any material, equipment, or labor necessary to accomplish this Work.

528.4.01 Limits

General Provisions 101 through 150.

528.5 Payment

All costs for material, equipment, or labor shall be included in the Lump Sum price bid for Epoxy Pressure Injection of Concrete Cracks.

Payment will be made under:

Item No. 528	Epoxy Pressure Injection of Concrete Cracks, Bridge No.___	Per lump sum

528.5.01 Adjustments

General Provisions 101 through 150.

Section 529—Navigation Lighting

529.1 General Description

This work consists of furnishing and installing navigation lighting (complete or to the extent indicated on the Plans) on bridges and on fender systems where required on the Plans and approved Shop and Work Drawings.

The Specification's intent is to secure a complete, operational system according to the National Electrical Code and applicable local ordinances.

529.1.01 Definitions

Qualified Electrician: A journeyman electrician with one of the two following classifications:

- Has a Class II license issued by the Georgia State Construction Industry Licensing Board
- Has completed an approved four-year apprenticeship training program

529.1.02 Related References

A. Standard Specifications

Section 500—Concrete Structures

Section 645—Repair of Galvanized Coatings

Section 852—Miscellaneous Steel Materials

Section 863—Preservative Treatment of Timber Products

Section 921—Luminaries

Section 922—Electric Wire and Cable

Section 923—Electrical Conduit

Section 924—Miscellaneous Electrical Materials

B. Referenced Documents

National Electrical Code

ASTM A 123/A 123M

529.1.03 Submittals

A. Contractor Qualifications

The Contractor performing this work must be on the Department's list of approved electrical contractors or electrical subcontractors.

B. Product Lists

To avoid misunderstanding and ensure compliance with the Specifications, submit to the Engineer for approval a complete list of the products proposed for use before purchasing materials or equipment. Products must comply with Plan requirements to be approved.

The product list shall include the following information:

- Manufacturer's name for each item
- Manufacturer's catalog number for each item

Where the Engineer deems necessary, alternate equipment will be specified.

C. Fees and Permits

Pay the fees and obtain the permits required by power companies and governmental agencies.

529.2 Materials

All electrical material shall be approved by the Underwriter's Laboratory or other acceptable testing agency.

Ensure that materials conform to the requirements of the following Specifications:

Material	Section
Wood Pole	863
Disconnect Switch	924.2.05
Magnetic Contactor	924.2.07
Lightning Arrester	924.2.03
Miscellaneous Electrical Materials	924
Electrical Conduit	923
Ground Rod	924.2.01
Luminaries and Lamps	921
Electrical Wire and Cable	922
Miscellaneous Steel Materials	852
Photoelectric Control	924.2.06

If this Specification or the Plans omit any item needed to install and operate the navigation lighting satisfactorily, include the item in the system.

If necessary, have a qualified person (including a Registered Professional Electrical Engineer) check, verify, or modify (with the Department's permission) the Contract requirements. The Department will review and approve a person's qualifications.

529.2.01 Delivery, Storage, and Handling

General Provisions 101 through 150.

529.3 Construction Requirements

529.3.01 Personnel

A. Qualified Electrician

Have a Qualified Electrician on the job site when electrical wiring is being pulled or electrical connections are being made.

Ensure that the Qualified Electrician possesses evidence of classification and displays this evidence to the Department's engineer in charge of the construction.

529.3.02 Equipment

General Provisions 101 through 150.

529.3.03 Preparation

General Provisions 101 through 150.

529.3.04 Fabrication

General Provisions 101 through 150.

529.3.05 Construction

A. Contractor Guidelines

Comply with the following:

- Local ordinances, rules, and regulations
- The Plans

  The Plans are not intended to show the complete details of the overall work, but they will indicate the general layout and designate acceptable manufacturers' equipment.
- Approved Shop and Working Drawings, including drawings by others, if any

B. Contractor Responsibilities

Take responsibility for the following:

- Provide fittings, devices, materials, and work necessary to install the complete, functional system.

  Any necessary drilling, cutting, patching, galvanizing repair, and other work required because of misplaced or plugged conduit or improper workmanship shall be done without additional compensation and shall be approved by the Engineer.
- Ensure that electrical work is adequate.

C. Construction Precautions

When a bridge is under construction, provide the lights and other signals necessary for protecting navigation as may be prescribed by the U.S. Coast Guard.

D. Galvanized Steel Items

The following steel items shall be galvanized according to ASTM A 123/A 123M, except the weight of zinc coating per square foot (meter) of actual surface for 1/8 in (3 mm) and 3/16 in (5 mm) steels shall average at least 1.25 oz (375 g) and no individual specimen shall show less than 1.0 oz (300 g).

- Structural steel conduit support angles on fender system
- Junction boxes, except stainless steel
- Conduit clamps and screws
- Luminaire retriever chain and swivel
- Lag screws

Powder-actuated galvanized studs may be of commercial galvanizing quality.

Repair damaged galvanized areas according to Section 645.

E. Conduit, Boxes, Fittings, Wiring, and Supports

Furnish and install as required by the National Electrical Code the conduit, boxes, fittings, wiring, supports, and accessories required to complete the work.

1. Conduit Specifications

   Ensure that conduit connections are waterproof.

   Provide approved conduit expansion joints at each bridge expansion joint.

   Use flexible conduit when going from the bridge superstructure to the substructure, from the bridge to the fender system, and in the transition areas between rigid members.

   a. Conduit for Service Risers and Bridges

      Unless otherwise shown on the Plans, use 1-1/4 in (32 mm) rigid galvanized steel conduit for the service riser and along the bridge.

   b. Underground Conduit

      Unless otherwise specified on the Plans, use 1-1/4 in (32 mm) nonmetallic conduit for the underground conduit between the service riser and the bridge. Join underground conduit according to the manufacturer's recommendations and bury it at least 24 in (600 mm).

   c. Conduit for the Fender System Walkway

      The conduit placed along the fender system walkway may be 1 in (25 mm) size and shall be either liquid tight flexible conduit or rigid galvanized steel conduit. Use the conduit size specified on the Plans.

   d. Conduit Connections

      Use flexible conduit to connect the rigid galvanized steel conduit located on the faces of pier or bent columns to the conduit located on the fender system walkway.

      Ensure this flexible conduit has waterproof couplings and is of sufficient length and slack to permit at least 2 ft (600 mm) of horizontal movement in each direction.

2. Conduit Installation

   Install conduit as follows:

   a. Install conduit perpendicular to or parallel with the principal structural members.

   b. Fit conduit terminals at the junction boxes with bushings.

   c. Support the rigid galvanized steel conduit at least every 10 ft (3 m) and within 3 ft (1 m) of junction boxes, luminaires, etc.

   d. Use ¼ in (6 mm) galvanized lag screws and clamps to fasten the conduit to the timber walkway of the fender system.

   The Contractor may use powder-actuated galvanized studs and clamps to fasten the following items (located underneath the bridge and down the face of pier or bent columns) to the concrete:

   - Rigid galvanized steel conduit
   - Expansion devices

3. Specifications of Pull and Junction Boxes

   Pull and junction boxes mounted on bridges and the fender system shall be waterproof; shall be made of galvanized steel, stainless steel, or cast aluminum; and shall comply with the National Electrical Code.

   There are two options for providing pull and junction boxes to be installed in the ground:

- Construct the boxes according to the Plan design and dimensions and at the locations shown on the Plans. Construct the concrete boxes of Class A Concrete meeting the applicable requirements of Section 500, including precast concrete boxes.
- Furnish and install manufactured boxes approved by the Engineer. Manufactured boxes will be permitted when the Engineer determines they are equal to the boxes constructed of Class A concrete in design, quality, and structural strength. Boxes must meet the requirements of Section 500.

Provide with each pull or junction box cast iron, steel, or reinforced concrete covers as shown on the Plans.

4. Pull and Junction Box Installation

   Install pull and junction boxes as follows:

   a. If necessary, use powder-actuated galvanized studs and clamps to fasten junction boxes located underneath the bridge and down the face of pier or bent columns to the concrete.

   b. Seal conduit entrance holes in pull or junction boxes around the conduit as approved by the Engineer.

   c. Blank off unused entrance holes and openings for conduit to be extended by others with suitable plugs of plastic, bituminous fiber, or other material approved to keep out foreign matter.

5. Luminaire Installation

   Install luminaires as follows unless otherwise shown on the Plans:

   a. Use the number and diameter of studs, bolts, and lag screws the luminaire manufacturer recommends.

   b. Fasten each channel marker to the bridge with powder-actuated, galvanized, threaded studs or cadmium-plated expansion bolts.

   c. Fasten each fender marker to the timber walkway with galvanized lag screws.

F. Power Supply and Wiring

Unless otherwise noted, the power supply shall be 120/240 volts, 3-wire, and single phase. The Department and the serving electric utility will agree upon the supply point, which in most cases will be near the Rights-of-Way line near the bridge location.

1. Service Pole

   Set up a service pole as follows:

   a. To receive the service from the Utility Company (unless otherwise indicated on the Plans or in the Specifications), set up a wood pole that complies with Section 863. The pole shall be at least 30 ft (9 m), Class 5, or as shown on the Plans.

   b. Install the following on the service pole:

      - A metallic service riser with a weatherhead
      - A weatherproof enclosure containing a fusible disconnect switch of the appropriate voltage and ampere rating or as shown on the Plans (see Subsection 529.3.05.H, “Power Control,” for information on additional items contained in the waterproof enclosure)
      - An underwriter-approved meter base in the service riser (where required by the power company or where indicated on the Plans)

G. Grounding System Construction

Furnish and install an approved lightning arrester at the weatherproof enclosure on the service pole and connect it to the grounding system.

1. Grounding System

Construct the grounding system as follows:

- Install a ground rod adjacent to the service pole.
- Connect neutral and grounding conductors to the ground rod.
- Install a separate, continuous copper grounding conductor (green) throughout the system.
- Solidly connect metallic, noncurrent carrying materials in the lighting system to the grounding conductor.
- Drive single ground rods vertically until the top of the rod is at least 12 in (300 mm) below the finished ground.
- Attach a length of No. 6 AGW bare copper, 7-stranded wire to the ground rod with suitable ground rod clamps. Connect this wire to the neutral and grounding conductors at the service pole.

2. Ground Rod System

   When the above procedure does not result in sufficient penetration, construct a ground rod system as follows:

   a. Place 3 parallel ground rods at least 6 ft (1.8 m) center-to-center in a horizontal pattern and at least 12 in (300 mm) below the finished ground.

   b. Joint and connect these rods to the neutral and grounding conductors at the service pole using suitable ground rod clamps and No. 6 AWG bare copper, 7-stranded wire.

H. Power Control

Unless otherwise specified on the Plans or the Specifications, furnish the following items for each service pole:

- **Photoelectric control complete with receptacle and accessories.** The control shall provide ON operation as indicated under Subsection 924.2.06, “Photoelectric Controls.”
- Disconnect switch
- **Magnetic contactor.** The contactor shall supply power to the lighting circuit.
- **Transformer.** If the supply voltage is other than 120/240 volts, furnish and install a transformer to provide 120 volt control voltage
- NEMA-3R lockable weatherproof enclosure(s)

The disconnect switch and magnetic contactor shall have the number of poles required to open each ungrounded conductor and shall be accessible from the ground.

Install the following items as follows:

1. Install the Photoelectric Control

   a. Mount the photoelectric control near the top of the service pole.

   b. Direct the photoelectric control toward the north sky.

   c. Enclose wiring to and from the photoelectric control in rigid galvanized conduit.

   The photoelectric control shall operate the magnetic contactor.

2. Install the Disconnect Switch, Magnetic Contactor, and Transformer

   Mount the disconnect switch, magnetic contactor, and transformer, if required, in NEMA-3R lockable weatherproof enclosure(s) on the service pole.

3. Install the Weatherproof Enclosure

   a. Install the weatherproof enclosure(s) so that it is accessible from the ground.

   b. Furnish a padlock(s) approved by the Engineer with two keys each for locking the weatherproof enclosure(s). When a project requires more than one padlock, key the padlocks alike.

529.3.06 Quality Acceptance

A. Inspection of the Navigation Lighting System

Materials and workmanship shall meet the requirements of the Plans and these Specifications and shall comply with the National Electrical Code.

The Work shall be inspected by the Department, the utility company involved, and the U.S. Coast Guard. The navigation lighting system shall be approved by both the Department and the U.S. Coast Guard.

If the Coast Guard fails to make its inspection within 30 days, the Department and the utility company will make the final inspection of the navigation lighting system. The Contractor will be relieved of any further responsibility for the system after Department acceptance.

B. Testing and Acceptance of the Navigation Lighting System

Final acceptance of the navigation lighting system will be withheld for a testing period of 30 days. The testing will consist of continuous, nightly, automatic operation after the Contractor completes the lighting work or until all other items in the Contract (except grassing) have been accepted, whichever occurs later. Assume the cost of the electrical energy consumed during the testing period.

Correct any defects in materials or workmanship that occur during the testing period at the Contractor's expense.

Any portion of the testing period (Subsection 529.3.06.B, "Testing Acceptance of the Navigation Lighting System") that occurs after final acceptance of the other Work will not be charged against the Contract Time.

529.3.07 Contractor Warranty and Maintenance

General Provisions 101 through 150.

529.4 Measurement

Each navigation lighting system completed and accepted at the location specified will be measured for payment on a lump sum basis. See Subsection 529.1, "General Description.")

529.4.01 Limits

General Provisions 101 through 150.

529.5 Payment

Each navigation lighting system completed and accepted at the location specified will be paid for at the Lump Sum Price bid for each system. This payment shall be full compensation for furnishing and installing materials and for labor, equipment, and incidentals necessary to complete the Item.

Payment will be made under:

Item No. 529	Navigation lighting, bridge no._____	Per lump sum

529.5.01 Adjustments

General Provisions 101 through 150.

Section 530—Waterproofing Fabrics

530.1 General Description

This work consists of waterproofing concrete and other masonry surfaces by preparing and applying a composite waterproofing membrane at locations shown on the Plans.

530.1.01 Definitions

General Provisions 101 through 150.

530.1.02 Related References

A. Standard Specifications

Section 500—Concrete Structures

B. Referenced Documents

General Provisions 101 through 150.

530.1.03 Submittals

General Provisions 101 through 150.

530.2 Materials

Ensure that materials meet the requirements of the following Specifications:

Material	Section
Waterproofing Membrane Material	888.2.03
Mortar	834.2.03

For a list of waterproofing membrane sources, see QPL 22.

530.2.01 Delivery, Storage, and Handling

General Provisions 101 through 150.

530.3 Construction Requirements

530.3.01 Personnel

General Provisions 101 through 150.

530.3.02 Equipment

General Provisions 101 through 150.

530.3.03 Preparation

A. Prepare the Concrete

Prime the concrete and apply the membrane only under the following conditions:

- Air and concrete temperatures are above 40 °F (4 °C).
- All surfaces are thoroughly dry.
- Concrete is at least 14 days old.

Prepare the concrete as follows:

a. Fill all hole cracks and depressions in the concrete surface flush with mortar composed of one part Portland cement and two parts approved sand and cure according to Subsection 500.3.05.Z, "Cure Concrete."

The Contractor may use approved, commercially produced, fast setting, no sag grouts to expedite the work.

b. Chip or grind smooth all high spots, sharp points, and edges.

c. Thoroughly clean and dry the concrete surface.

B. Prime the Concrete

Prime all areas that will receive membrane and allow the areas to cure according to the manufacturer's recommendations or as directed by the Engineer.

Areas not covered with membrane in 24 hours must be reprimed.

530.3.04 Fabrication

General Provisions 101 through 150.

530.3.05 Construction

A. Seal Openings and Structure Edges

At openings for drains and pipes and at the edges of structures, construct a seal to prevent water from passing between the waterproofing and the surface that it overlays.

Apply a manufacturer-recommended edge seal to any area of the membrane permanently exposed to sunlight.

B. Waterproof Joints

Joints require a double thickness of waterproofing membrane over properly sealed expansion, construction, or control joints.

Pre-strip the joint with a 12 in. (300 mm) wide membrane before applying the main waterproofing. The surface of this pre-strip does not need priming.

C. Seal Seams

Edge and end seams must overlap at least 4 in (100 mm) on all applications.

D. Apply Membrane

Apply the membrane as follows:

Rub the entire membrane firmly and completely as soon as possible to minimize bubbles caused by air outgassing or water vapor from the concrete.

Slit all fish mouths, overlap the flaps and repair with a patch pressed or rolled to make the seal. Seal the edges with mastic.

Patch misaligned or inadequately lapped seams with the membrane.

E. Protect Membrane

When necessary, use a manufacturer-approved protection system to protect waterproofing membranes from damage caused by backfill material or other construction activities.

F. Repair Membrane

As soon as possible, patch all tears and inadequately lapped seams with waterproofing membrane.

Slit fish mouths and repair with a patch extending 8 in (200 mm) in all directions from the slit and seal the edges of the patch with mastic.

530.3.06 Quality Acceptance

General Provisions 101 through 150.

530.3.07 Contractor Warranty and Maintenance

General Provisions 101 through 150.

530.4 Measurement

This work will be measured for payment in square yards (meters) of accepted waterproofing.

530.4.01 Limits

General Provisions 101 through 150.

530.5 Payment

This work will be paid for at the Contract Price per square yard (meter) for waterproofing complete in place.

Payment will be made under:

Item No. 530	Waterproofing	Per square yard (meter)

530.5.01 Adjustments

General Provisions 101 through 150.

Section 531—Dampproofing

531.1 General Description

This work consists of dampproofing concrete and other types of masonry surfaces.

531.1.01 Definitions

General Provisions 101 through 150.

531.1.02 Related References

A. Standard Specifications

General Provisions 101 through 150.

B. Referenced Documents

General Provisions 101 through 150.

531.1.03 Submittals

General Provisions 101 through 150.

531.2 Materials

Ensure that materials meet the requirements of the following Specifications.

Material	Section
Bituminous Material for Dampproofing or Waterproofing	826.2.01

Unless otherwise specified, Pitch Type I or II shall only be used when required by the Contract. When pitch is required, use Type I on vertical surfaces and Type II on flat surfaces.

Use the primers specified in Subsection 826.2.01 with asphalt and pitch seal coats.

531.2.01 Delivery, Storage, and Handling

General Provisions 101 through 150.

531.3 Construction Requirements

531.3.01 Personnel

General Provisions 101 through 150.

531.3.02 Equipment

General Provisions 101 through 150.

531.3.03 Preparation

A. Prepare Surfaces

Concrete surfaces shall cure at least 5 days before dampproofing.

Prepare the surface as follows before dampproofing:

1. Thoroughly clean and dry the surface to be dampproofed.
2. Spray at least two applications of primer, allowing primer to be thoroughly absorbed before the next application.

531.3.04 Fabrication

General Provisions 101 through 150.

531.3.05 Construction

A. Dampproof Surfaces

After the final primer coat has been absorbed, dampproof the surface as follows:

1. Evenly apply a seal coat having a temperature of 300 °F (150 °C) to 350 °F (175 °C) for asphalt and 200 °F (90 °C) for pitch.
2. Allow the seal coat to dry at least two days or longer. The seal coat shall be hard before any water or earth contacts it.
3. Protect the seal coat from the weather during the drying period.

531.3.06 Quality Acceptance

General Provisions 101 through 150.

531.3.07 Contractor Warranty and Maintenance

General Provisions 101 through 150.

531.4 Measurement

This work will be measured for payment in square yards (meters) of accepted dampproofing.

531.4.01 Limits

General Provisions 101 through 150.

531.5 Payment

This work will be paid for at the Contract Price per square yards (meters) for dampproofing complete in place.

Payment will be made under:

Item No. 531	Dampproofing	Per square yard (meter)

531.5.01 Adjustments

General Provisions 101 through 150.

Section 533—Bridge Deck Waterproofing Membrane

533.1 General Description

This work consists of preparing surfaces for and applying a protective membrane to concrete bridge decks. The membrane shall serve as a waterproof barrier to be overlaid with asphaltic concrete.

The waterproofing method shall be as specified on the Plans and shall be one of the following:

- **Method A:** A waterproofing membrane system placed directly on the Portland cement concrete bridge deck surface.
- **Method B:** A waterproofing membrane system placed directly on a specified grade and thickness of freshly placed asphaltic concrete on the bridge deck.

533.1.01 Definitions

General Provisions 101 through 150.

533.1.02 Related References

A. Standard Specifications

Section 400—Hot Mix Asphaltic Concrete Construction

Section 413—Bituminous Tack Coat

Section 500—Concrete Structures

B. Referenced Documents

General Provisions 101 through 150.

533.1.03 Submittals

General Provisions 101 through 150.

533.2 Materials

All materials shall meet the requirements of the following specifications:

Material	Section
Asphaltic Concrete	400
Bituminous Prime	412
Bituminous Tack Coat	413
Sand for Blast Cleaning	804
Waterproofing Membrane Materials	888.2.01
Mortar	834.2.03

For a list of sources, see QPL 22.

533.2.01 Delivery, Storage, and Handling

General Provisions 101 through 150.

533.3 Construction Requirements

533.3.01 Personnel

General Provisions 101 through 150.

533.3.02 Equipment

General Provisions 101 through 150.

533.3.03 Preparation

A. Method A Surface Preparation

Cure new bridge decks that will receive waterproofing membrane according to Subsection 500.3.05.Z, "Cure Concrete" without using membrane-forming curing compounds or linseed oil treatments.

Prepare concrete surfaces receiving Method A waterproofing as follows:

1. Chip or grind smooth high spots, sharp points, and edges on the deck surface.
2. Fill holes and depressions in the concrete surface flush with mortar.

   Mortar shall be composed of one part Portland Cement and two parts sand and shall be cured according to Subsection 500.3.05.Z, "Cure Concrete."

   Approved, commercially produced, fast setting grout may be used to expedite the Work.
3. Allow the mortar to cure.
4. Clean and remove all traffic paint and other harmful materials from the deck by sand-blasting the entire deck surface to which the waterproofing membrane will be applied.
5. Remove all sand-blasting residue with compressed air. Do not use water to clean the deck.

B. Method B Surface Preparation

Prepare concrete surfaces receiving Method B waterproofing as follows:

1. Prepare the Joints

   When the Plans specify to place the waterproofing membrane continuously across any joint, prepare the joints as follows before applying the asphaltic concrete:

   a. Place an additional strip of preformed sheet membrane transversely across deck joints. This strip shall have a minimum width of 18 in (450 mm) and shall be centered across the joint.

   b. Apply a mastic (of the type specified by the manufacturer) at the face of the curb and at joints to ensure that the membrane uniformly adheres to the concrete.
2. Apply the Asphaltic Concrete

   Once the joints have been prepared, apply the asphaltic concrete as follows:

   a. Apply a tack coat to the bridge deck at the rate specified by the Engineer.

   b. Place the specified grade and thickness of asphaltic concrete.

   c. Compact the asphaltic concrete according to the applicable provisions of Section 400.

533.3.04 Fabrication

General Provisions 101 through 150.

533.3.05 Construction

A. Method A Waterproofing

Use the following guidelines when waterproofing by Method A:

1. Observe Weather Conditions

   Do not perform the work when the relative humidity is above 80 percent or when rain is imminent.

Prime surfaces and place membrane only when the air and concrete surface temperatures are above 50 °F (10 °C) and the surface is thoroughly dry.

2. Prime the Surface

   Prime the surface as follows:

   a. Ensure that the concrete decks are at least 14 days old before applying prime and membrane.
   b. Prime and cure all areas that will receive membrane according to the manufacturer's recommendation or as directed by the Engineer.

3. Place the Waterproofing Membrane

   Place the waterproofing membrane as follows:

   a. Unless otherwise designated on the Plans, extend the waterproofing membrane at least 6 in (150 mm) up the faces of the curbs, parapets, and barriers in the transverse direction and to the outer limits of the approach slabs in the longitudinal direction.
   b. Apply the membrane to the deck surface using either hand methods or mechanical applicators.
   c. Apply the membrane to the concrete deck so that it forms a butt joint with the faces of open joints and at expansion devices and other joints.
   d. Seal the edges of the membrane and the drain openings to prevent water from passing between the waterproofing and the surface it covers.
   e. Install preformed sheet membrane in a shingled pattern so that water can drain to the low areas of the deck without accumulating against seams. Follow these steps to install the membrane:
      1) Roll the preformed sheet membrane into place with a lawn-type roller to minimize air bubbles and to ensure that the membrane bonds with the primed surface and bonds at the overlaps.
      2) Overlap each strip of preformed sheet membrane at least 4 in (100 mm).
      3) Place the membrane so that end laps are in the direction of the paving operation.
      4) When the Plans indicate to place the waterproofing membrane continuously across any joint, prepare the joints as described in Section 533.3.03.B.1.
   f. Eliminate air bubbles by puncturing the membrane and forcing the air out.
   g. Repair these holes and other ruptures as recommended by the manufacturer. Extend patches at least 6 in (150 mm) beyond the defect.
   h. Completely open all drain holes in the deck before paving over them.

4. Place the Pavement

   Place the pavement as follows:

   a. Do not allow construction traffic over the waterproofing membrane before placing the surface pavement.
   b. Apply the paving over the membrane.
   c. Completely open drain holes in the deck after placing the pavement course.

B. Method B Waterproofing

After the asphaltic concrete is compacted and water used in the compaction process has dried completely, place waterproofing membrane directly on the asphaltic concrete using the methods specified in Method A Waterproofing with the following exception:

The tack coat or primer is not required on the asphaltic concrete beneath the waterproofing membrane.

C. Method A and Method B Applying Bituminous Overlay

The paving operation and asphaltic concrete temperatures shall comply with the membrane manufacturer's recommendations and the applicable asphalt concrete pavement Specifications, or be as directed by the Engineer.

Only vehicles necessary for the overlay or paving operations shall be on the membrane.

The Contractor shall be responsible for maintaining the condition of the waterproofing membrane until it is covered with pavement.

Apply bituminous overlay in either Method A or Method B as follows:

1. Before placing the overlay and if required, apply a bond coat of adhesive (bituminous tack coat) to the surface of the waterproofing membrane according to the membrane manufacturer's recommendations.
2. Overlay the waterproofing membrane with the thickness or quantity and the type of asphaltic concrete specified on the Plans.

   Bituminous overlay application shall begin as soon as possible after the membrane and, if required, after the bond coat are placed.
3. Dump the asphalt concrete directly into the receiving hopper of the paving machine.
4. Have the truck pull forward and avoid contacting the paving machine while it is moving.
5. Do not permit the mixture to be dumped onto the deck ahead of the paving machine.
6. Spread and roll the asphalt concrete so that the membrane will not be damaged. Roll the first asphalt concrete lift with a breakdown roller as soon as possible after the paving machine has passed. Do not permit the use of vibratory rollers with the vibrator on.
7. Since a minimum percent compaction is not specified, compact the asphaltic concrete to the satisfaction of the Engineer and applicable compaction requirements in Subsection 400.3.06.C.
8. Place a final surface course of Open Graded Surface Mixture according to Subsection 828.2.01, "Open Graded Surface Mixtures" in the amount specified on the Plans unless otherwise specified.

533.3.06 Quality Acceptance

General Provisions 101 through 150.

533.3.07 Contractor Warranty and Maintenance

General Provisions 101 through 150.

533.4 Measurement

Bridge deck waterproofing membrane, complete in place and accepted, will be measured by the number of square yards (meters) of bridge deck and approach slabs covered. Material placed on curb faces and overlaps will not be measured.

Tack coat and asphaltic concrete will be measured and paid for as provided under the respective Items of Section 400 and Section 413.

533.4.01 Limits

General Provisions 101 through 150.

533.5 Payment

Bridge deck waterproofing membrane will be paid for at the Contract Unit Price per square yards (meters) for preparing the surfaces and for furnishing and applying the waterproofing system.

Payment will be made under:

Item No. 533	Bridge deck waterproofing membrane (method____)	Per square yard (meter)

533.5.01 Adjustments

General Provisions 101 through 150.

Section 534—Pedestrian Overpass Bridge

534.1 General Description

Specifications for this work will be included elsewhere in the Contract.

Section 535—Painting Structures

535.1 General Description

This work consists of painting new and existing steel structures, steel H-piling and metal shell piling, and steel swaybracing. The work includes applying special protective coatings to piling and swaybracing, complete in place. The work also includes protecting traffic and property.

535.1.01 Definitions

EPA: Environmental Protection Agency

OSHA: Occupational Safety and Health Administration

PCCP: Painting Contractor Certification Program

QP1: SSPC Contractor Certification program evaluates contractors who perform surface preparation and industrial coating application on steel structures in the field.

QP2: SSPC Contractor Certification program evaluates the contractor's ability to perform industrial hazardous paint removal in a field operation. Two QP 2 categories are available based on the type of equipment and containment

- Category A - Negative Air Containment
- Category B - No Negative Air Containment

SSPC: The Society for Protective Coatings

535.1.02 Related References

A. Standard Specifications

Section 107—Legal Regulations and Responsibility to the Public

Section 501—Steel Structures

Section 520—Piling

Section 647—Traffic Signal Installation

Section 870—Paint

B. Referenced Documents

SSPC-Guide 6, Guide for Containing Debris Generated During Paint Removal Operations

SSPC-Guide 7, Guide for the Disposal of Lead-Contaminated Surface Preparation Debris

SSPC-SP 6/NACE No. 3, Commercial Blast Cleaning

SSPC-SP 7/NACE No. 4, Brush-Off Blast Cleaning

OSHA Standards 29 CFR 1910 and 29 CFR 1926

EPA “Uniform Hazardous Waste Manifest”

EPA Method 1311, "Toxicity Characteristics Leaching Procedure (TCLP)"

535.1.03 Submittals

Provide evidence to the Department prior to beginning The Work that any Contractor or Subcontractor that performs surface preparation or coating application is currently QP1 certified by the Society for Protective Coatings (SSPC).

Provide evidence to the Department prior to beginning The Work that any Contractor or Subcontractor performing cleaning, rehabilitation, and painting work on bridge components coated with lead based paint or paint containing hazardous material is currently QP2, Category "A" certified by the Society for Protective Coatings (SSPC).

At the Preconstruction Conference or at least four (4) weeks before mobilization, make the following submittals to the Engineer for acceptance as appropriate:

A. Health and Safety Responsibilities

Provide effective engineering and work practice controls to protect employee health and safety.

1. Comply with all relevant Environmental Protection Agency (EPA), Resource Conservation and Recovery Act (RCRA), Comprehensive Environmental Response, Compensation and Liability Act (CERCLA), Occupational Safety and Health Act (OSHA), and Environmental Protection Division (EPD) Regulations.
2. Certify to the Engineer that personnel involved with lead paint removal operations (including rigging and material handling personnel) have received training and understand the applicable parts of the latest edition of OSHA Standards 29 CFR 1910 and 29 CFR 1926, including any amendments. Have the certification signed by all personnel involved with lead paint removal.
3. Provide test results from an OSHA Certified Laboratory showing blood lead levels of employees that may be exposed to lead during the Project.
4. Provide a medical monitoring schedule to verify acceptable blood lead levels during the Project and after the Project is completed.

B. Blast Cleaning Containment System

1. Before beginning work at each bridge, submit design and drawings of the proposed containment system to the Engineer for review and approval. Include tarpaulin data sheets to verify that the material is airtight, and tightly secured at the seams. Do not use burlap or open weave materials.
2. When the proposed containment system will induce large loads on the existing structure, the Engineer may direct the Contractor to submit an analysis of the load that will be added to the existing structure by the containment system and blast waste. Have a licensed Professional Engineer registered in the State of Georgia with bridge experience perform and stamp the load analysis. Ensure that the analysis shows that the system will not induce a load on the bridge that overstresses it or affects the structural integrity of the bridge.
3. Do not allow the containment system or equipment to violate the minimum bridge clearances shown on the Plans, unless otherwise approved by the Engineer.

C. Emergency Contingency Plan

Submit to the Engineer for review and approval an emergency contingency plan for cleaning up spills from failure of the containment system, spent material recovery system, or storage containers. Define procedures for spills or releases of waste and indicate the training of workers handling the waste as required by RCRA.

D. Spent Material Sampling Plan

Submit in writing to the Engineer for review and approval the proposed method for collecting the spent material. Include a sampling plan that conforms to EPA SW849 or a statement of intent to use the DOT sampling plan (Subsection 535.3.03.B.9). This submittal will also include the name of the company (ies) and responsible person(s) that will sample, treat, and haul the spent material.

E. Material Safety Data Sheets

Submit Material Safety Data Sheets on the abrasive and paint materials that will be used.

F. Hazardous Waste Transporter Information

Provide the name and EPA identification number of each licensed Transporter used for shipping hazardous waste to a treatment, storage, or disposal facility.

G. Permitted Site Information

Provide the name and EPA identification number, phone number, and address for each permitted off-site treatment, storage, or disposal facility to which the waste will be shipped.

H. Accredited Laboratory Information

Provide the name of the Environmental Lead Laboratory Accreditation Program (ELLAP) accredited laboratory that will perform the TCLP tests.

I. Quality Control (QC) Program

Submit a written QC Program that identifies the following:

1. Instrumentation that will be used
2. Schedule of required measurements and observations
3. Procedures for correcting unacceptable work
4. Procedures for improving surface preparation and painting quality as a result of quality control findings
5. Names, qualifications, experience, and training of personnel who will be managing and implementing the QC program and conducting quality control tests

Include the GA DOT Quality Control Daily Report form as supplied by the Engineer.

Include SSPC Painting Contractor Certification Program (PCCP) certifications

The Engineer will forward a copy of these submittals to the Office of Materials for review.

535.2 Materials

Ensure that materials meet the requirements of the following Specifications:

Material	Section
Abrasives for Blast Cleaning	Note 1*
Paint	870

Note 1*

Use low dusting mineral abrasives which contain a minimum of ten percent (10%) by weight G-80 steel grit blended homogeneously throughout the blasting abrasive or 100% steel grit. Alternate abrasive mixtures proposed by the Contractor require approval by the Office of Materials before use. Abrasives shall contain no more than 100 ppm of any corrosive compound such as sulfate or chloride. Abrasives shall not contain EPA characteristic compounds such as lead, chromium, or arsenic which can be detected by the EPA Toxicity Characteristic Leaching Procedure (TCLP). The mineral abrasive used to blend with steel grit will be listed in the Department's Qualified Products Manual.

535.2.01 Delivery, Storage, and Handling

General Provisions 101 through 150.

535.3 Construction Requirements

535.3.01 Personnel

A. Contractor Certification

Provide the Engineer with documentation to ensure that all Contractors or Subcontractors that perform surface preparation or coating application are currently certified by the Society for Protective Coatings (SSPC) to the requirements of SSPC QP-1.

Provide the Engineer with documentation to ensure that all Contractors or Subcontractors that perform removal or disturbance of paint containing lead or other hazardous material are currently certified to the requirements of SSPC QP-2, Category A.

The painting Contractors and painting Subcontractors must remain so certified for the duration of the project. If a Contractor's or Subcontractor's certification expires, the company will not be allowed to perform any work until the certification is reissued. Notify the Engineer of any change in Contractor certification status, including certification expiration or certification renewal. Requests for extension of time for any delay to the completion of the project due to an inactive certification will not be considered and liquidated damages will apply.

535.3.02 Equipment

A. Brushes

Preferably, use brushes with round or oval cross sections. If using flat brushes, ensure that the maximum width is 4 in (100 mm).

For surfaces inaccessible to brushes, apply paint with sheepskin daubers made for painting.

Application of inorganic zinc by brush is prohibited except for small areas and touch up work.

B. Spray Equipment

If spraying paint, use air, cold airless, or hot circulating airless equipment. Spray equipment is subject to the Engineer’s approval.

Use spray equipment that can constantly agitate the paint. Also, use equipment with a device that thoroughly mixes paints in their shipping containers before the paints are removed.

Water traps are required as follows:

- When using air spray equipment, ensure that the air lines in the system have suitable water traps.
- For cold airless spray equipment, water traps are not required in the air lines; use them if desired.

C. Rollers

Rollers are subject to the Engineer’s approval.

Use rollers suitable to the type of paint applied and the work areas involved. Provide pans for dipping the rollers into the paint.

Follow these restrictions:

- Do not use worn rollers.
- Do not use rollers to apply special protective coatings or paints to piling and swaybracing.
- If a surface is inaccessible to rollers, apply the paint with sheepskin daubers made for painting.

D. Inspection Equipment

Ensure that the system applicator has the following:

- Wet-film gauge

- Dry-film gauge
- Surface thermometer
- Sling psychrometer
- Abrasive blasting finish gauge

During and after field cleaning and painting, furnish a safety belt and a lift truck, bucket truck, or snooper truck to the Engineer's satisfaction to inspect the cleaning and painting operation.

E. Protection Equipment

Furnish signs, warning lights, barricades, enclosures, and watchmen as required by the Manual on Uniform Traffic Control Devices or by the Engineer.

535.3.03 Preparation

Refer to Subsection 535.3.05B.1, "Weather Conditions" before performing any cleaning operations.

A. Clean New Steel Structures

Before painting, clean new steel structures as follows:

1. Clean steel H-piling, metal shell piling, and steel swaybracing.
2. Field blast clean steel H-piling, metal shell piling, and steel swaybracing that will receive paints systems or special protective coatings by field blasting. The extent of cleaning shall be SSPC-SP6, "Commercial Blast Cleaning."
3. Thoroughly shop clean the following structural steel metal surfaces to be painted. The extent of cleaning shall be SSPC-SP6, "Commercial Blast Cleaning."
4. Clean field weld or bolted connection surfaces as follows:
   a. Before cleaning the steel, straighten bent metal according to Subsection 501.3.05.A, "Straightening Material."
   b. Before welding or bolting, field clean the surfaces that will touch after the welding or bolting as described in Subsection 535.3.03.A, "Clean New Steel Structures," step 1 and step 2.
   c. Keep the surfaces free of paint and metal spatters.
   d. Field clean the remainder of the structural steel.

      If desired, delay cleaning the rest of the structural steel until concrete work is complete and the main painting operation is ready to begin.
5. Prepare new steel structure surfaces for painting as follows:
   a. Have the Engineer inspect each span or unit of work.
   b. Do not begin painting until the Engineer approves the spans or units of work.

B. Clean Existing Steel Structures

Ensure that no work is performed before a Project Bridge Painting /Repainting Pre-Construction Conference is held.

Clean only as much metal as can be painted before it rusts. If surfaces rust after cleaning, clean them again before painting them.

Blast clean existing steel structures as follows:

1. Construct protection devices. Assume responsibility for damages to vehicles, persons, or property caused by cleaning operations.

   Protect the following from blast-cleaning hazards:

   - Portions of the structure (superstructure, substructure, and highway appurtenances) that could be damaged by the blast cleaning
   - Existing pedestrian, vehicular, and other traffic on, underneath, or adjacent to the structure

   Construct protection devices as follows:

a. Cover or shield portions of the structure that could be damaged.

b. Construct a system that protects traffic from direct blasting and prevents abrasive materials and debris from spreading and creating a traffic hazard.

c. If blast cleaning disrupts traffic flow, stop cleaning or clean behind screens.

d. If the protection devices are not providing protection, stop the work and correct the problem.

Do not begin work until effective corrections are made.

e. Before reopening work areas to traffic, remove abrasive material and debris deposited on the pavement, shoulders, or slope paving in the area.

2. Prepare the structures for blast cleaning as follows:

a. If the Project Inspector requires, remove railings, nameplates, and other interfering parts from surfaces to be cleaned and painted.

b. Straighten bent metal.

c. Before blast cleaning a beam or girder, remove dust and debris from the top of the bottom flange.

3. Remove all coats of paint to clean, bare metal by blast cleaning or other approved means.

The extent of cleaning shall be SSPC-SP6, “Commercial Blast Cleaning,” with an anchor pattern between 1.0 and 2.0 mils (0.025 and 0.051 mm). Anchor patterns greater than 2.0 mils (0.051 mm) will require that the primer be applied at a thickness of at least 1 mil (0.025 mm) over the anchor pattern or that the steel be re-blasted unless otherwise approved by the Engineer.

4. After blast cleaning and before painting, prepare the steel surfaces as follows:

a. Remove sand, dust, and other foreign matter from the following:

- Deck
- Piers
- Railing
- Other adjoining parts of the structure
- Slope paving

b. Remove any fins, tears, or slivers from the steel.

c. Remove burred or sharp edges that appear on any steel members.

d. Have the Engineer inspect each span or unit of work.

e. Do not begin painting until the Engineer approves the spans or units of work.

5. Contain the paint chips, abrasive particles, and dust or debris (spent material) caused by cleaning and blasting as follows:

a. Contain spent material according to the SSPC GUIDE 6, Class 1. The containment materials and support structure may be flexible or rigid.

b. Ensure that tarpaulins are airtight and secure at the seams.

c. Do not use burlap or open-weave materials.

d. Seal seams and joints by taping or overlapping tarps at least 24 in (600 mm). Overlap the entryway at least 3 ft (1 m).

e. Use negative pressure and verify it as follows:

- Verify pressure through the concave nature of the containment materials, taking into account wind effects.
- Observe air flow using smoke or other visible means inside or outside the containment.

f. Filter the air exhausting from the containment with a properly sized dust collector, bag house, or other approved method.

g. During abrasive blasting operations, ensure that the cross-draft and downdraft air movements within the containment comply with OSHA Standard 29 CFR 1910.94.

6. Additional blast-cleaning requirements for bridges over waterways:
   a. Ensure that there is no scum on the surface of the water outside a 200 ft (60 m) limit of the bridge. Stretch a floating boom across the waterway at or before this 200 ft (60 m) limit on the downstream and downwind sides of the bridge to contain floating spent material.
   b. If floating residue is found outside this 200 ft (60 m) limit, the Engineer will consider protection inadequate and will require further containment measures.
   c. If the wind velocity is high enough to blow the residue outside the 200 ft (60 m) limit, the Engineer will temporarily suspend the blast cleaning.
   d. Provide a flotation device in the water underneath the area being blast cleaned to collect the spent material.
   e. If the stream is too shallow for a barge, erect a temporary platform or tarp arrangement to collect the spent material.
7. Alternate Containment System

   If desired, propose an alternate method for containing the dust and spent materials from blast cleaning the structural steel.

   The Department may reject a proposed alternate method that does not satisfy the Department's concerns for the safe removal and containment of lead-based paint from bridge structures.

   Submit the proposal for evaluation and approval as follows:
   a. Submit a detailed, written proposal describing the alternate containment and blasting method.
   b. Include in the description specific information on materials and equipment, noise levels, and worker safety and health.
   c. Supply references of other locations where the alternate method has been used.
   d. The Department will review the information submitted and may reject the proposal or issue a conditional approval.
   e. If the Department grants conditional approval, demonstrate the alternate method for containment and blast cleaning on a trial basis.
      1.) The Department will evaluate the effectiveness of dust and spent material containment, worker safety and health concerns, and noise levels.
      2.) If the Department finds the alternate method unacceptable, the Department may reject it and require work according to this Specification.
      3.) If the Department approves the alternate method, the Contractor will receive no additional payment above the established Contract Unit Price.
8. Handling Spent Materials

   Handle spent materials according to the following requirements:
   a. Collect the spent material daily and store it in sealed waste disposal containers.
   b. Use waste containers that are approved by the Engineer and located where they will not cause a potential hazard.
   c. Store waste containers in a temporary, fenced, secured area that is not located in a storm water runoff course, in standing water, nor on Department property. Ensure compliance with the requirements of EPA 40 CFR 264.14 and 40 CFR 264.18.
   d. Label waste containers in compliance with hazardous waste laws.
   e. Have the Contractor or his/her Consultant sample the spent materials according to the approved sampling plan referenced in Subsection 535.1.03.D.
   f. Test the material using certified independent laboratory in accordance with the Toxicity Characteristic Leaching Procedure (TCLP).
   g. Collection, storage, sampling, and testing shall be performed in accordance with EPA RCRA Regulations (40 CFR 240-299).
   h. Forward a copy of all TCLP results to the Engineer and to OMR.

i. If the TCLP toxicity test results do not classify the spent materials as a hazardous waste, uniformly blend twenty percent Portland cement with the spent materials and solidify the mixture before disposing of it at a licensed solid waste landfill. The cost of treatment and disposal of non-hazardous spent material is considered incidental to the pay item.

j. If the TCLP test results classify the material as a hazardous waste, treat the material to the Land Disposal Restriction standard of 0.75mg/l. The waste shall not be disposed of until authorized by the Engineer.

1) If the waste is to be treated on-site, submit a waste analysis plan to the regional EPA office in accordance with 40 CFR 264.13 within 30 days of receipt of the TCLP results.

2) If the waste is to be treated off-site, submit TCLP results to the EPA permitted hazardous waste treatment facility.

k. Forward a copy of all manifests and pertinent documents to the Engineer and to OMR.

9. Sampling for Lead Paint Residue

a. Use the approved detailed sampling plan included in Subsection 535.1.03.D, "Spent Material Sampling Plan" which could either be the sampling plan listed below or a similar plan that conforms to *EPA SW 846, Chapter 9 Test Methods for Evaluating Solid Waste Physical/Chemical Methods*.

Ensure the plan includes the following:

1.) Who will be responsible for the sampling

2.) How often samples will be taken

3.) How the samples will be obtained

4.) Where the samples will be taken

5.) How the samples will be handled

6.) How the sample results will be tied back to the waste from which it was sampled.

b. Inform the Project Personnel and Independent Assurance Engineer as to when (date and time) the samples will be taken. The Department will monitor the sampling procedure and the Project Personnel will enter all pertinent information in a logbook. Information to be recorded is as follows:

1.) Project and Contract ID numbers

2.) Sampling points

3.) Field contact personnel

4.) Producer of waste

5.) Type of process producing the waste

6.) Type of waste

7.) Total number of samples

8.) Number of drums each sample will cover

9.) Which bridge location and the drum number i.e. 1-10, 11-18 that the sample will cover.

a. Label all of the drums on the project. Ensure that the labels are weatherproof and include the following:

- The Date
- The Project Number
- The Contract ID Number
- The Bridge Location
- Assign drums a series of consecutive numbers, i.e., 1-40.

c. Take one grab sample (using random sampling technique) from a drum for each bridge location. Use a thieving device to secure samples from each of the drums. The minimum sample size is 0.66 lb (300 g) which is about a cupful.

d. Samples may be taken by the paint Contractor or his/her consultant who will treat the waste.

1.) Send the samples to a certified private testing lab.

2.) Attach a Sampling Analysis Request (sample card) to the samples which includes:

a) The Date

b) Project Number

c) Contract ID number

d) Bridge Location

e) Name of collector

f) Place of collection

g) Number of drums from Bridge each sample will cover, and

h) Drum numbers, i.e. 1-10, 11-18 that sample will cover.

3) Include this information on the test report and the manifest so that the waste on the manifest can be keyed to the results on the TCLP report.

4) Ensure that a chain of custody form accompanies the sample and is returned with the test results.

e. Test the samples for EPA Method 1311, Toxicity Characteristic Leaching Procedure (TCLP).

f. Test one (1) sample for each bridge location.

1.) If the results are 5 mg/l or greater leachable lead, the waste is to be declared hazardous and no further testing is needed until the waste has been treated. After treatment, the waste shall be re-sampled and re-tested in accordance with an approved sampling plan and shall be below 0.75 mg/l before disposal.

2.) If the results are below 5mg/l, the waste is to be declared non-hazardous, then the contractor or his/her consultant shall uniformly blend twenty percent Portland cement with the spent material and solidify the mixture before disposing of it at a licensed solid waste landfill.

g. Additional samples must be acquired according to EPA SW 846 and SSPC-Guide 7 Section 5.6.5.

h. Mail the Test reports and manifests to the Engineer's office, which will review them, take the appropriate action and send them to the lab files at the Office of Materials. Send an extra copy of each to the Office of Materials/Independent Assurance.

If the TCLP toxicity test results classify the spent materials as a hazardous waste, treat the waste either on-site or off-site to the Land Disposal Restriction Standard of 0.75 mg/l. Do not dispose of the waste until authorized by the Engineer. Hazardous waste material may be treated off-site if the treatment is performed by a licensed hazardous waste treatment facility in accordance with EPA and EPD guidelines. Forward a copy of all manifests and other pertinent documents to the Engineer and to OMR. These documents will be maintained in the project file for three years.

If after treatment, the spent material is classified as a hazardous waste by the TCLP test, retreat it until the Universal Treatment Standard is met. Hazardous waste disposal shall be paid for as specified under Subsection 535.5 “Payment”, of this Specification.

10. Handle hazardous waste as follows:

a. Comply with Section 107 of the Specifications. The Contractor is responsible for complying with the hazardous waste laws when performing the Work. Obtain a separate United States Environmental Protection Agency, Generator I.D. Number for each project where the spent material is hazardous waste according to the Toxicity Characteristic Leaching Procedure (TCLP) results.

b. Obtain the generator I.D. number from the Georgia Environmental Protection Division, Hazardous Waste Management, (404) 656-2833.

c. Obtain the Generator I.D. Number within 30 days of receiving the TCLP results and provide copies of the number to the Project Engineer and the Office of Maintenance, Bridge Inspection Unit, No. 2 Capitol Square, Atlanta, Georgia 30334.

d. Dispose of hazardous spent material only at a licensed hazardous waste disposal facility.

e. If the disposal facility requires it, send a sample of spent material for confirmation testing before delivering the shipment.

f. Transport the waste to the facility using EPA-approved licensed waste haulers.

g. Document each truckload of hazardous waste using an EPA "Uniform Hazardous Waste Manifest."

h. According to EPA and EPD rules, provide GDT and the Georgia EPD notification and certification of treated hazardous spent abrasives. Include the following:

- Name and address of facility receiving the shipment Description of the waste as initially generated, including the applicable EPA Hazardous Waste Number(s) and treatability group(s)
- Treatment standards applicable to the waste at the initial generation point
- Signature of an authorized Contractor representative on the certification

g. Hazardous waste disposal is paid for as specified under Subsection 535.4.01.A, "Spent Materials."

C. Clean Structures Under or Over Railroads

When cleaning and painting steel structures involves work on, over, or below the railroad right-of-way or the property of a railroad company (Railroad), comply with the following:

- The additional requirements, including railroad flagging and insurance coverage, listed in the Special Provision for Protection of Railway Interests
- The Railroad's general rules, regulations, and requirements including those on safety, fall protection, and personal protective equipment

Coordinate the work with the Railroad and ensure that there will be no interference with or delay to Railroad operations, including train, signal, and communication services.

1. Railroad Protection Requirements

The Contractor is responsible for damages to vehicles, persons, or property resulting from cleaning operations.

Ensure that the facilities and property of the Railroad or any tenants remain undamaged.

Comply with the following:

a. Protect the following from the damages of blast-cleaning operations:

- Traffic (pedestrian, vehicular, rail, train, and other kinds of traffic) on, under, or next to the structure
- Portions of the structure (superstructure, substructure, and highway appurtenances) that could be damaged

b. Weight or anchor ground cloths to withstand the suction effects of a passing train.

c. Restrain ropes, hoses, tarps, booms, and other equipment so they do not hang from the bridge or otherwise infringe on the clearances around an active track (see Subsection 535.3.03.C.2, "Railroad Construction Clearance Limits," below). Account for the following:

- Wind billowing of draped tarpaulins
- Sag from the weight of collected spent materials

2. Railroad Construction Clearance Limits

Comply with the Railroad Construction Clearance Limits:

Railroad Construction Clearance Limits		
Track Type	**Horizontal Limits**	**Vertical Limits**
Single Track	25 ft (8 m) from the center line	The existing vertical clearance from the top of the rail to the underside of the bridge
Multiple Tracks	25 ft (8 m) from the center lines of the outermost tracks	The existing vertical clearance from the top of the rail to the underside of the bridge

3. Requirements on Bridges Carrying Roadways Over Railroad Tracks

When work is required within the Railroad Construction Clearance Limits, ensure that the following can be moved outside the clearance limits when the Railroad flagman notifies you to clear the track for rail traffic.

- Working platforms

- Scaffolding
- Containment systems
- Other equipment necessary to complete the Work

While the track is open to rail traffic, do not allow ropes, hoses, tarps, booms, or other equipment or items to hang from the bridge or infringe on the clearance limits.

4. Requirements on Bridges Carrying Railroad Tracks over Roadways

   When work is required on the Railroad bridge, ensure that the following can be moved completely off the bridge when the Railroad flagman notifies you to clear the track for rail traffic.

   - Working platforms
   - Scaffolding
   - Containment systems
   - Other equipment necessary to complete the Work
   - Spent material

Do not attach rigging or other items to the bridge rails or barriers at the sides of the bridge.

While the track is open to rail traffic, do not allow ropes, hoses, tarps, booms, or other equipment or items to remain on the bridge.

D. Prepare Steel Piling, Swaybracing, and Concrete Piling Surfaces for Special Protective Coatings

Prepare surfaces and material for special protective coatings according to the manufacturer's recommendations. For a list of sources, see QPL 18.

535.3.04 Fabrication

General Provisions 101 through 150.

535.3.05 Construction

A. Provide Protection

Protect the structure, adjoining property, and the public from the dangers and damages of cleaning and painting.

Protect the following:

- Pedestrian, vehicular, and marine traffic on or underneath the structures being painted
- Structures
- Slope paving

  Clean slope paving stained during painting to the Engineer's satisfaction.

B. Meet General Painting Requirements

Follow these requirements when painting new and existing steel structures:

Meet General Painting Requirements

Follow these requirements when painting new and existing steel structures:

1. Weather Conditions

   Cleaning or Painting shall not take place during windy or gusty conditions unless the contractor can demonstrate to the satisfaction of the Engineer that containment is sufficient to prevent the escape of paint overspray or spent material. If any paint overspray or spent material is detected outside containment areas, cease all operations until clean up has been completed. Do not recommence cleaning or painting operations until additional measures have been taken to prevent any future escape of spent material and/or paint overspray.

When the Plans specify System VI (waterborne), ensure that the minimum air and surface temperature is 50 °F (10 °C). Comply with the other weather requirements listed below.

When the Plans specify System VII, ensure that the minimum air and surface temperatures are above 35 °F (2 °C) and the relative humidity is greater than 50% when applying the inorganic zinc primer. Apply System VII waterborne intermediate and top coats only when the temperatures of both the air and surface are above 50 °F (10 °C).

For Systems IV and V (alkyd), apply paint only when the air and surface temperatures are both above 40 °F (4 °C).

Weather Requirements for Painting All Systems	
Maximum surface temperature	140 °F (60 °C)
Relative humidity	Below 85%
Minimum surface temperature	5 °F (3 °C) above dew point

Follow these weather restrictions:

- Do not apply paint to surfaces that are damp or otherwise unsatisfactory as determined by the Engineer.
- Do not paint in open yards or on erected structures when the metal is hot enough to cause the paint to blister or produce a porous film.
- Do not paint metal hot enough to cause oil separation in the alkyd paint.
- Do not paint metal when freezing weather 32 °F (0 °C) is forecast or expected before the paint can dry.
- Do not store at temperatures below 32 °F (0 °C)or above 100 °F (38 °C). When outdoor temperatures exceed these limits, paint shall be stored in an appropriate indoor location.

2. Oxidation

   If a prime coat on structural steel fades or chalks because of oxidation, thoroughly remove the oxidation by brushing or by washing with water until the sound prime coat is visible.

3. Paint Thinning

   Do not thin or dilute paints.

4. Application Methods

   Thoroughly mix paints in their shipping containers using mechanical devices before removing the paint.

   For inorganic zinc primers, add the powder component to the liquid component with thorough stirring, and continue stirring until the powder is well dispersed. Strain the mixture through a 30-60 mesh sieve to remove large particles. Use pressure pots equipped with a mechanical agitator, which will remain in motion throughout the application.

   Ensure that the paint formulation matches the application method (brush, roller, airless spray, or air spray).

   Apply paint neatly by brushing, spraying, or rolling. Use rollers only as specified in Subsection 535.3.02.C, “Rollers.”

   When using brushes or rollers, apply the paint as follows:

   a. Produce an even coating covering the metal or the previous coat.
   b. Work the paint into corners and crevices.
   c. Keep enough paint on rollers and overlap the applications to avoid unsightly or mottled areas.

   Use the paint numbers shown in the Table of Application Methods, below.

Table of Application Methods			
Brush	**Roller**	**Airless Spray Hydraulic**	**Air Spray**
Ordinary Exposure Green System IV (Lead Free Alkyd)			
1A	1A	1A	X
1A	1A	1A	X

Table of Application Methods			
Brush	**Roller**	**Airless Spray Hydraulic**	**Air Spray**
2A	2A	2A	X
3B	3B	3B	X
X	X	X	X
Heavy Exposure Green System V (Lead Free Alkyd)			
1A	1A	1A	X
1A	1A	1A	X
1A	1A	1A	X
2A	2A	2A	X
3B	3B	3B	X
Ordinary Exposure Green System VI (Waterborne)			
1W	1W	1W	1W
1W	1W	1W	1W
2W	2W	2W	2W
3W	3W	3W	3W
Ordinary exposure Green System VII (Zinc Primer)			
X	X	Inorganic Zinc Primer	X
2W	2W	2W	2W
3W	3W	3W	3W

5. Paint Systems and Dry Film Thickness

   Apply the minimum required dry film thickness and the additional coats according to the paint system required on the Plans.

Table of Paint Systems and Minimum Required Dry Film Thickness		
No. of Coats	**Color of Coats**	**Thickness, mils (mm)**
Ordinary Exposure Green System IV (Lead Free Alkyd)		
Primer	Red	2.0 (0.051) to 5.0 (0.127)
Touch-Up	Red	*
2nd Coat	Buff	2.0 (0.051) to 5.0 (0.127)
3rd Coat	Green	1.0 (0.025) to 3.0 (0.076)
4th Coat	None	X
Heavy Exposure Green System V (Lead Free Alkyd)		
Primer	Red(T)	2.0 (0.051) to 5.0 (0.127)
Touch-Up	Red	*
2nd Coat	Red	2.0 (0.051) to 5.0 (0.127)
3rd Coat	Buff	1.5 (0.038) to 5.0 (0.127)

Table of Paint Systems and Minimum Required Dry Film Thickness		
No. of Coats	**Color of Coats**	**Thickness, mils (mm)**
4th Coat	Green	1.0 (0.025) to 3.0 (0.076)
Ordinary Exposure Green System VI (Waterborne)		
Primer	Brown	3.0 (0.076) to 5.0 (0.127)
Touch-Up	Brown	*
2nd Coat	Buff or White	3.0 (0.076) to 5.0 (0.127)
3rd Coat	Green	3.0 (0.076) to 5.0 (0.127)
4th Coat	None	X
Ordinary Exposure Green System VII (Zinc Primer)		
Primer	Gray	3.0 (0.076) to 5.0 (0.127)
2nd Coat	Buff or White	2.0 (.0.051) to 5.0 (0.127)
3rd Coat	Green	2.0 (0.051) to 5.0 (0.127)
4th Coat	None	X
* = 2.0 (0.051) for touch-up coats (T) = Tinted		

6. Proper Drying

   Ensure that each coat is thoroughly dry and cured before applying the next coat. Allow at least 24 hours between coats.

   If weather conditions and paint type require, allow longer periods between coats.

7. Cracks and Cavities

   Before applying the second field coat, fill small cracks and cavities that are not sealed watertight by the first field coat using the following

Plan-Required Paint System	Fill Mixture
IV or V	Pasty mixture of zinc hydroxy phosphite and linseed oil
VI	Pasty mixture recommended and supplied by the manufacturer
VII	Pasty mixture recommended and supplied by the manufacturer

C. Paint New Steel Structures

Paint new steel structures as follows:

1. Use the correct paint system. The Plans usually specify one of the systems shown in the Table of Paint Systems and Minimum Required Dry Film Thickness. If the Plans do not specify a paint system, use System VI.

   If the structure is located in the 13 county ozone non-attainment region, use only Waterborne coatings for any painting operation conducted between May 1 and September 30. The 13 metro Atlanta counties that comprise the non-attainment region are: Cherokee, Clayton, Cobb, Coweta, DeKalb, Douglas, Fayette, Forsyth, Fulton, Gwinnett, Henry, Paulding, and Rockdale. Do not apply Alkyd coatings and the System VII inorganic zinc primer under the above conditions. System VI and the System VII waterborne intermediate and top coats may be applied.

2. Paint new structural metal with one shop prime coat, one field touch-up coat, and two field weather coats. When severe exposure conditions require, apply one additional prime coat. Once painting has commenced, (including shop coat) succeeding coats of paint are to be the same paint system and from the same paint manufacturer.

3. Apply the type and color of paint coats as required by the system number shown on the Plans.

   If succeeding coats are the same type and color, tint one of the underlying coats as required by Subsection 870.2.01.B.1.d and Subsection 870.2.06.A.6.
4. Do not paint advertising on structural steel.
5. Adhere to the following requirements for special surfaces:
   a. Concrete Contact Areas

      If the following surfaces will touch previously poured and hardened concrete, apply two coats of primer to them:
      - Steel surfaces
      - Nongalvanized handrail posts
      - Nonembedded armored joints

      Unless otherwise specified on the Shop Drawings, do not shop paint surfaces that will touch plastic concrete.
   b. Inaccessible Areas

      Before assembly, paint surfaces that will be inaccessible after assembly or installation with two coats of primer.
   c. Connection Areas

      Do not shop paint the following connection areas:
      - Surfaces that will touch after welding or bolting
      - Areas next to field welds
   d. Machine-Finished Surfaces

      Using the materials specified, either shop paint or coat the machine-finished surfaces according to Subsection 501.3.04.D.9, "Coating Machine-Finished Steel Surfaces."
   e. Plates That Touch Elastomeric Pads

      Apply one coat of the shop primer specified on the Plans to plates that will touch elastomeric bearing pads.

      1.) Paint surfaces and edges that will be exposed after components are erected.
      2.) Do not apply the primer paint to areas that will be welded.
      3.) Do not apply the primer paint to the area that will bear against the elastomeric pad.
      4.) Dimension and locate the blocked-out, no-paint areas to within plus or minus 1/2 in (13 mm) of the theoretical location and size of the elastomeric pad.
6. Do not handle or load steel until the shop paint is dry.
7. Field paint steel surfaces according to this time line:
   a. Before Erection

      If the following surfaces will touch previously poured and hardened concrete, touch them up as required with primer (or apply two coats of primer if the item was not shop painted) before installing them:
      - Steel surfaces
      - Nongalvanized handrail posts
      - Nonembedded armored joints

      Do not install until the paint is thoroughly dry.
   b. After Erection

      After completing steel erection, clean unprimed surfaces of connection areas requiring paint as specified in Subsection 535.3.03.A, "Clean New Steel Structures," step 3.

      Connection areas include welded or bolted splices, beam and diaphragm connections, and bracing connections.

      Prime connection areas with the paint specified in the system number shown on the Plans.

      Do not prime welded connections until the following occurs:
      - Weld metal is cleaned according to Subsection 501.3.04.I.2, "Paragraph 3.10.1," and Subsection 501.3.04.I.3, "Paragraph 4.30.1."

- Radiographic or magnetic particle inspection work, if specified, is complete and the welds are approved.

c. After Concreting

After completing concreting work, clean surfaces as specified in Subsection 535.3.03.A, "Clean New Steel Structures," and field paint as follows:

1.) Cover the following with one coat of touch-up primer paint and allow it to dry:
   - Shipping and erection marks
   - Bolt heads
   - Other surfaces with worn off or defective prime coat

2.) During touch up, stripe or paint the following with an additional coat of primer:
   - Exposed edges of flanges on rolled beams and built-up girders
   - Edges of angles and stiffeners
   - Exposed edges of gusset plates, splice plates, and cover plates

3.) Ensure that sharp, exposed edges have two full coats of primer paint, including the shop coat.

4.) If removing oxidation as described in Subsection 535.3.05.B.2, "Oxidation," damages the prime coat so that bare metal is exposed after cleaning, prime the exposed bare metal with an additional coat at no expense to the Department.

5.) If removing oxidation reduces the prime thickness, use two field weather coats, if desired, to obtain the total thickness required for the paint system.

However, when the two field weather coats are different types of paint, use additional prime paint to obtain the prime thickness.

D. Paint Existing Steel Structures

Paint existing steel structures as follows:

1. Prevent paint overspray by using containments.
2. The weather conditions specified for new steel structures described in Subsection 535.3.05.B also apply to existing steel structures.
3. Apply the correct colors and number of coats as follows:

   Only steel which has undergone complete removal of all coats and which has a surface cleanliness conforming to SSPC SP-6 may be coated with System VI.

   Give this steel one full prime coat and two weather coats, all of the color and type required by the Special Provisions or Plans. If succeeding coats are of the same type and color, tint one of the underlying coats-as required by the Specifications.
4. The drying requirements of Subsection 535.3.05.B.6 specified for new steel structures shall apply to existing steel structures.
5. The paint thinning requirements of Subsection 535.3.05.B.3 specified for new steel structures shall apply to existing steel structures.
6. Painting Of Surfaces:
   a. Methods Of Application: The requirements of Subsection 535.3.05.B.4.as specified for new steel structures shall apply to existing steel structures.
   b. Cracks And Cavities: The requirements of Subsection 535.3.05.B.7 as specified for new steel structures shall apply to existing steel structures.
   c. Paint Thickness: The minimum required dry film thickness as specified in Subsection 535.3.05.B.5 and the additional coats specified in Subsection 535.3.05.B.5 for new steel structures shall apply to existing steel structures. However, when new paint is applied over existing sound paint, the required wet film thickness of the new coats shall be that required by the Special Provisions or Plans.

7. Apply the minimum required dry film thickness and the additional coats specified in the Table of Paint Systems and Minimum Required Dry Film Thickness.

   However, when applying new paint over existing sound paint, comply with the required wet film thickness specified by the Special Provisions or Plans for new coats.
8. After completing the painting, replace the railings, name plates, and other interfering parts removed (as described in Subsection 535.3.03.B, "Clean Existing Steel Structures" step 2.a) to the Engineer's satisfaction.

E. Paint Steel H-Piling, Metal Shell Piling, and Steel Swaybracing

Paint this material as follows:

1. Weather Conditions

   Except as specified below, apply paint in the weather conditions specified in Subsection 535.3.05.B.1, "Weather Conditions."

   a. Painting in open yards or on erected structures shall not be done when the metal is sufficiently hot to cause the paint to blister or produce a porous film.

   b. Metal shall not be painted when freezing weather [32 ^{o}F (0 ^{o}C)] is forecast or expected in the time that would occur before the paint has dried.
2. Thinning Paint

   Do not thin or dilute pile paints.
3. Number of Coats and Color

   Unless the Plans require a No. 1P or 2P system, described in Subsection 870.2.05.A.1, "Paint for Steel Piling and Swaybracing," paint steel H-piling, metal shell piling, and steel swaybracing with a System VII paint system.

   Apply a No. 1P system as follows:

   a. When using a No. 1P system formulated as a first application primer and a separate finish coat, ensure that containers are clearly labeled as primer or finish coat.

   b. Apply the primer first.

   c. Apply successive coats using either primer or finish coat.

   d. Ensure that the final coat is a finish coat
4. Method of Application

   Apply the black paints noted in Subsection 535.3.05.E.3, "Number of Coats and Color" using either brushes or sprayers.

   When using a brush, apply the paint as follows:

   a. Apply a thick application of paint to be plastered or troweled on the steel surfaces.

   b. Brush out the paint only as required to obtain uniform thickness; do not attempt to brush it out neatly.

   c. Work the paint into corners and crevices.
5. Application Rate

   For each coat, apply at least 1 gal of paint type per 60 ft². (0.7 L/m^2). Ensure that the total dry-film thickness of paint coats is as specified in Subsection 535.3.05.E.6, "Thickness of Paint," below.
6. Thickness of Paint

   Ensure that the final, dry-film thickness of the completed work is at least 25 mils (0.635 mm).

   Apply additional coats to achieve the minimum dry-film thickness at no expense to the Department.
7. Extent of Paint

   Paint to the following extent:

   - Coat exposed piling with a System VII paint system unless a No. 1P orNo. 2P system is specified on the Plans.
   - Coat piling in the stream bed and within 10 ft (3 m) of the top of the stream bank with the System VII from 5 ft (1.5 m) below the stream bed to the bottom of the concrete cap.

- Coat end bent piles 2 ft (600 mm) below the bottom of the cap or concrete encased as defined in Subsection 520.3.05.O, "Coat and Paint Piling."
- For piling that will be encased according to Section 547, paint the piling with System VII to the extent specified in Subsection 520.3.05.O, "Coat and Paint Piling."
- Before driving, coat test piles located in permanent surface water with a System VII according to Subsection 520.3.05.O, "Coat and Paint Piling."

  Paint enough of the test pile to ensure that the coated portion extends 5 ft (1.5 m) below the stream bed or bottom.

8. Drying Requirements

   Ensure that each coat is thoroughly dry before the next coat is applied.

F. Apply Special Protective Coatings to Steel Piling, Steel Swaybracing, and Concrete Piling

Unless the Plans require No. 1P or 2P system, apply a System VII coating. Apply the coating to the extent specified in Subsection 520.3.05.O, "Coat and Paint Piling."

Ensure that coverage, wet- and dry-film thicknesses, temperature considerations, primer use, and drying and curing time comply with the manufacturer's recommendations.

Apply the special protective coating as follows:

1. When the structure will be welded, do not apply the material until the weld is placed and cleaned.
2. Apply the material in at least two coats by brushing.
3. Apply the second coat at right angles to the first coat.
4. Use the elapsed time between coats recommended by the manufacturer.
5. Ensure that the finished film has no holidays and pinholes and completely covers the underlying surface.
6. After applying the coating material, recoat damaged areas where the protection is ineffective as determined by the Engineer.
7. Where swaybracing members will be welded to piles and painted in advance, burn off the coating at the weld location and proceed as follows:
   a. Thoroughly clean the burned area by scraping and power-operated wire brushing before welding.
   b. After making and cleaning the weld, recoat the area.
8. Do not drive piles painted in advance until the second coat has thoroughly dried and completely cured.

535.3.06 Quality Acceptance

A. Correct Defective Work

If applied paint does not meet the requirements of this Specification, remove the paint or correct it using SSPC-approved means.

Remove paint that is applied to improperly cleaned surfaces. Clean the surfaces and repaint them to the Engineer's satisfaction.

B. Meet the Required Total Dry-Film Thickness

If the minimum required total dry-film thickness specified for the paint system is not reached after applying the required number of coats and colors, apply additional coats at no expense to the Department until the required thickness is obtained.

The Department considers the applied zinc primer deficient in thickness for measured dry thickness values less than 3 mils (0.076 mm). If more than four deficient thickness values (one measurement per 25 ft.^{2} (2.32 m^2) of surface area) are found in any 200 ft^2 (18.6 m^2)of continuous metal section, blast clean the entire section to a SSPC-SP6, Commercial Blast condition. Repaint the section with inorganic primer to achieve a dry film coating thickness of 3.0 to 5.0 mils (0.076 to 0.127 mm).

Repair primed areas having excessive dry film coating thickness, coating "dry spray", visible coating "mudcracking", visible surface hackles, handling abrasions, and missed paint in bolt holes. Repair in accordance with the written recommendations of the paint manufacturer. Obtain the Engineer's approval for all repair recommendations. Include current product data and application instruction sheets with the repair recommendations.

535.3.07 Contractor Warranty and Maintenance

General Provisions 101 through 150.

535.4 Measurement

The cost of painting new steel structures shall be included in the Contract Price for structural steel. No separate payment will be made.

Cleaning and painting existing steel bridge structures will be measured and paid for at the Contract Unit Price for “Painting Existing Steel Structure Station or Bridge I.D. No. _____.” This includes payment for the following:

- Equipment (including a “flotation device” or temporary platform on waterway bridges)
- Work platform
- Bucket truck or snooper truck with safety belt
- TCLP testing
- Materials and work necessary to remove lead-based paint and contain the spent materials
- Collection and storage of spent materials, water, and slurry generated by abrasive blasting

535.4.01 Limits

A. Spent Materials

Treatment of hazardous waste and subsequent disposal shall be paid for under a force account basis. The Engineer will reimburse the Contractor based upon invoices from the licensed hauler and disposal facility. An additional amount equal to 3% of the total invoices will be paid as administrative costs incurred by the Contractor.

The costs of collecting spent material, furnishing the containers, loading the material into containers, treating the material onsite, and loading the containers into the licensed hauling unit will not be paid for separately. These costs are considered incidental to the pay item.

The disposal of other spent materials collected is incidental to the Pay Item “Painting Existing Steel Structures.”

B. Piling and Steel Swaybracing

The cost of applying special protective coatings or paint to piling shall be included in the Contract Price for piling. No separate payment will be made.

The cost of applying special protective coatings or paint to steel swaybracing shall be included in the Contract Price for structural steel. No separate payment will be made.

535.5 Payment

Payment is full compensation for the costs, direct and indirect, of complying with the requirements of this Specification.

Payment will be made under:

Item No. 535	Painting existing steel structure, Station No. ____	Per lump sum
Item No. 535	Painting existing steel structure, Bridge I.D. No. ____	Per lump sum
Item No. 535	Painting existing steel structures, Railroad Special, Station No. _____	Per lump sum
Item No. 535	Painting existing steel structures, Railroad Special, Bridge I.D. No. _____	Per lump sum

535.5.01 Adjustments

General Provisions 101 through 150.

Section 537—Cattle Pass

537.1 General Description

Specifications for this work will be included elsewhere in the Contract.

Section 538—Post-tensioned Prestressed Concrete Construction

538.1 General Description

Specifications for this work will be included elsewhere in the Contract.

Section 539—Inspection Traveler

539.1 General Description

Specifications for this work will be included elsewhere in the Contract.

Section 540—Removal of Existing Bridge

540.1 General Description

This work consists of removing and disposing of or salvaging as specified in Subsection 540.3.05.C, "Disposal and Ownership of Material" all or parts of an existing bridge for the Department's further disposition.

The work includes, but is not limited to, the following:

- Removing all or part of the superstructure or the substructure as described in Subsection 540.3.05.A, "Extent of Removal."
- Excavating to remove the structure unless the excavation is required as a part of another Pay Item.
- Necessary backfilling because of the removal or excavation.

Parts of the structure removed will not be included in the measurements for any excavation to be paid under another Pay Item.

540.1.01 Definitions

General Provisions 101 through 150.

540.1.02 Related References

A. Standard Specifications

Section 201—Clearing and Grubbing Right-of-Way

B. Referenced Documents

General Provisions 101 through 150.

540.1.03 Submittals

General Provisions 101 through 150.

540.2 Materials

General Provisions 101 through 150.

540.2.01 Delivery, Storage, and Handling

General Provisions 101 through 150.

540.3 Construction Requirements

540.3.01 Personnel

General Provisions 101 through 150.

540.3.02 Equipment

General Provisions 101 through 150.

540.3.03 Preparation

A. Sequence of Operations

No existing structure shall be removed or closed to traffic until traffic has been satisfactorily provided for as required by the Plans or the Engineer.

No burial will be allowed under any conditions in areas designated by the Department as wetlands.

540.3.04 Fabrication

General Provisions 101 through 150.

540.3.05 Construction

A. Extent of Removal

Where culverts will replace an existing bridge, remove portions of the existing bridge, including piling, within the area of the proposed culvert to a minimum depth of 5 ft (1.5 m) below the flow line of the culvert.

Otherwise, do the following:

- Remove the superstructures, or parts of them, as shown on the Plans.
- Remove the entire substructure down to the streambed or the natural ground line unless the Plans require that old substructures or parts of them be used as permanent parts of the new structure.
- Remove the parts of the substructure that interfere with the new work. Do not leave parts within the limits of an excavation required as part of another Pay Item.
- Remove fender systems and dolphins to the streambed.
- Leave abutments or end bents in place that do not interfere with the stream flow or the new work if the Plans indicate.
- If the abutments or end bents must be removed, remove them and slope the existing fill immediately next to them in an attractive manner as determined by the Engineer.

B. Care in Removal

Use only approved methods to remove an existing bridge and be careful during blasting to prevent property damage or injury.

1. Reuse of Existing Structures
   Handle existing structures being reused as follows:

   a. If part of a separate unit of an existing structure will be incorporated into the new structure, remove the part from that unit without blasting.
   b. If the Plans provide for reusing existing reinforcement, clean, straighten, or bend reinforcement to the required dimensions and cut it as an incidental part of this work.
   c. When existing structures will remain as part of a widened structure, neatly remove parts from the structures. Leave the face of the joint essentially true to the line and plane indicated on the Plans.

2. Salvageable Material
   Handle salvageable material as follows:

   a. Determine from the Plans the parts, if any, to be salvaged for the Department's further disposition.
   b. Arrange the salvaging method accordingly.
      The Contractor shall be responsible for damage to salvageable materials because of carelessness and shall replace or compensate the Department for damaged salvageable materials.
   c. When a wrecking ball is used, have no blows struck within 24 in (600 mm) of the edge of any member to be salvaged for the Department.

C. Disposal and Ownership of Material

Dispose of material as follows:

1. Salvage only the material designated on the Plans for salvage.
2. Disassemble this material and neatly stockpile it near the bridge site and above high water.
3. Do not use any materials stockpiled for the Department without written permission from the Engineer.

   All other materials removed shall become the property of the Contractor, who shall remove them from the bridge site or, if permitted, bury them neatly within the right-of-way, all without additional compensation.
   Dispose of the above materials according to Subsection 201.3.05.E, "Removal and Disposal of Materials."

540.3.06 Quality Acceptance

General Provisions 101 through 150.

540.3.07 Contractor Warranty and Maintenance

General Provisions 101 through 150.

540.4 Measurement

This work will not be measured separately for payment

540.4.01 Limits

General Provisions 101 through 150.

540.5 Payment

This work will be paid for at the Contract Price per Lump Sum, which will be full compensation for all things necessary to complete the Work.

The cost of excavation needed only to remove or dispose of all or parts of an existing structure, and which is not within the limits of an excavation required as part of another Pay Item, shall be included in the Contract Price for this work. This price shall also include the cost of backfilling excavation performed for these purposes.

Payment will be made under:

Item No. 540	Removal of Existing Br, Sta No -	Per lump sum
Item No. 540	Removal of Existing Br, Br No -	Per lump sum
Item No. 540	Removal of Parts of Existing Bridge, Sta No -	Per lump sum
Item No. 540	Removal of Parts of Existing Bridge, Br No -	Per lump sum

540.5.01 Adjustments

General Provisions 101 through 150.

Section 541—Detour Bridges

541.1 General Description

This work consists of constructing, maintaining, and removing detour bridges.

Construct detour bridges the width and length required on the Plans. (The bridge width is the clear distance between curbs or hubguards.) Construct the bridges at the locations required on the Plans and provide the necessary end walls or bulkheads as part of the Work.

541.1.01 Definitions

General Provisions 101 through 150.

541.1.02 Related References

A. Standard Specifications

Section 104—Scope of Work

Section 105—Control of Work

Section 540—Removal of Existing Bridge

B. Referenced Documents

AASHTO HS-15

AASHTO Standard Specifications for Highway Bridges

Georgia Standard 4960 and 4961

541.1.03 Submittals

A. Bridge Design Considerations

Unless otherwise shown, design detour bridges for an AASHTO HS-15 live load capacity. This capacity is based on the working stresses allowed for the materials used and for the design criteria of the AASHTO Standard Specifications for Highway Bridges.

The Contractor may omit lane loadings from design considerations. Load factor design is allowed.

B. Bridge Drawings

Submit the proposed layout and details for each detour bridge to the Engineer for review as follows:

1. Do not begin work until the drawings have been approved.
2. Submit drawings in either of the following forms:
   - Three prints
   - A reproducible drawing

   The Engineer can require the Contractor to change the drawings to conform to the Specifications.
3. After making required changes, resubmit the drawings for final review.

541.2 Materials

Use materials approved by the Department. Material restrictions are as follows:

- Do not use timber in the superstructure.
- Do not use structurally unsound materials of any type.

Piling may be timber. Tight bark does not need to be removed from timber piles.

541.2.01 Delivery, Storage, and Handling

General Provisions 101 through 150.

541.3 Construction Requirements

541.3.01 Personnel

General Provisions 101 through 150.

541.3.02 Equipment

General Provisions 101 through 150.

541.3.03 Preparation

General Provisions 101 through 150.

541.3.04 Fabrication

General Provisions 101 through 150.

541.3.05 Construction

A. Construct the Detour Bridge

Construct the detour bridge according to drawings approved by the Engineer.

B. Construct Safety Features

Construct either of the following safety features at both ends of the detour bridge:

1. Guard rail

   Construct according to the Construction Details shown in the Plans.
2. Precast median barrier according to Ga. Std. 4960 and 4961

   When the precast median barrier option is selected, construct the barrier as follows:

   a. Place the precast median barrier on both sides and both ends of the detour bridge unless otherwise directed by the Engineer.

   b. Ensure that the barrier extends at least 40 ft (12 m) from the bridge ends unless the Plans show otherwise.

C. Remove the Detour Bridge

After the permanent construction is open to traffic, remove the detour bridge according to Section 540.

Material salvaged from the detour bridge remains the property of the Contractor. Consider the salvage value when compiling the bid.

541.3.06 Quality Acceptance

General Provisions 101 through 150.

541.3.07 Contractor Warranty and Maintenance

A. Maintain the Detour Bridge

Except as otherwise provided in Subsection 104.05.D, "Detours Outside Right-of-Way," maintain the detour bridge so it can safely carry the design loading at all times. Furnish labor and material to maintain the bridge.

If the Engineer determines that the detour bridge endangers public safety, promptly repair the bridge. If the bridge is not repaired immediately, the Engineer will proceed according to Subsection 105.15, "Failure to Maintain Roadway or Structures."

541.4 Measurement

This work will not be measured separately for payment.

541.4.01 Limits

General Provisions 101 through 150.

541.5 Payment

This work will be paid for at the Contract Price per detour bridge complete in place, maintained, and removed.

Payment will be made under:

tem No. 541	Detour bridge (requires width, length, and sta. no.)	Per lump sum

541.5.01 Adjustments

After the detour bridge is completed, the Engineer will include 80 percent of the Contract Price for the detour bridge in the next statement.

After the detour bridge is satisfactorily removed, the Engineer will include the remaining 20 percent in the next statement.

Section 542-Contractor Proposed Alternate to Reinforced Concrete Deck Girder

542.1 General Description

This Specification covers design requirements for superstructures proposed by the Contractor as alternates to cast-in-place reinforced concrete deck girder structures.

This work is limited to construction using precast reinforced or precast prestressed concrete stems, including AASHTO Type I beams.

For areas not specifically covered in this Specification, refer to the applicable portions of the Project Specifications, Standard and Supplemental Specifications of the Department, and Part I of the AASHTO Specifications for Highway Bridges with interim and Guide Specifications.

542.1.01 Definitions

General Provisions 101 through 150.

542.1.02 Related References

A. Standard Specifications

Section 105—Control of Work

B. Referenced Documents

AASHTO Specifications

AASHTO Specifications for Highway Bridges, including interim and Guide Specifications

542.1.03 Submittals

A. Department's Responsibilities

The Department will quickly review submittals to avoid delaying the Contractor's scheme.

The Department will judge the completeness, accuracy, and structural acceptability of submittals.

B. Contractor's Bid Price

Include the following in the bid price:

- Costs for complying with this Specification
- Costs for completing and revising the Department Plans

C. Submittals

The Contractor may bid based on using precast reinforced or precast prestressed concrete stems. When bidding is based on an alternate design, submit a Contractor-proposed alternate.

1. Follow Submittal Guidelines

   Follow these guidelines for submittals:

   a. Submit the Plan on reproducible mylar sepias.
   b. Submit design notes, except for computer printouts, on A4 paper, neatly bound, indexed, and stamped by the Design Engineer.
   c. Allow the Department 60 days from the date it receives the submission to review the construction Plan.
   d. Do not begin bridge construction until the construction Plans are reviewed and approved.

e. Ensure that the Plans and notes indicate they have been checked by the Department's Bridge and Structural Design section.

2. Submit the Contractor-Proposed Alternate

Even when submitting an alternate, assume responsibility for the Plans and working drawings required by Subsection 105.02, "Plans and Working Drawings."

Submit alternate construction Plans and design notes that are prepared and stamped by the Design Engineer.

The alternate Plans submitted shall include, but not be limited to, the items below. Indicate the information using the same format used on the Department Plans.

a. General Plan and Elevation Sheet

Show the following on this sheet for each Contractor-proposed alternate structure bid:

- Span lengths
- Pier locations
- Minimum horizontal clearances from the pier face to the edge of the roadway
- Minimum vertical clearances from the bottom of the lowest portion of the superstructure to the roadway surface (outside edge of shoulder to outside edge of shoulder)
- The 28-day concrete strength for the superstructure and substructure
- Yield and working strengths of the reinforcing steel proposed for the superstructure and the substructure
- Design Specifications and interim Specifications used during the design of the structure
- Design live loading, impact factor, and the future wearing surface loading.

b. Details of the Proposed Structure

On projects that involve widening existing structures, eliminate the tie strips shown on the Department Plans. Include in the proposal for the Project the cost savings from eliminating the tie strips.

Include the following items in the structure details:

- Each cross section at the midspan, end bent, and intermediate bent showing reinforcing steel size, spacing, and location
- Concrete dimensions relative to computing the structural properties of the members
- The dimensions of fillets
- The spacing and size of the web stirrups and longitudinal reinforcing, shown in a longitudinal view of the stem
- Design notes indicating how the spacings and sizes of reinforcing bars were obtained

c. Details of the Size and Type of Tendons for Prestressed Alternate

Include on the drawings the size and type of tendons for prestressed alternate, the horizontal location, and the vertical profile. Also include the following:

- Location of the hold-down point for the tendons
- Initial prestress force and strength of concrete when the tendons are released
- Method of retaining the depressed tendons in place
- Calculations for determining the tendon elongation required to produce the specified pretensioning force
- Calculations for determining the casting length
- Detensioning schedule

d. Dead Load Deflections from the Slab, Stem, Coping, and Barrier

e. Camber for the Stems

Include in the camber the effects of vertical curvature.

542.2 Materials

General Provisions 101 through 150.

542.2.01 Delivery, Storage, and Handling

General Provisions 101 through 150.

542.3 Construction Requirements

542.3.01 Personnel

General Provisions 101 through 150.

542.3.02 Equipment

General Provisions 101 through 150.

542.3.03 Preparation

General Provisions 101 through 150.

542.3.04 Fabrication

General Provisions 101 through 150.

542.3.05 Construction

A. Design and Construct Team

Contractor-proposed alternates are considered a design and construct proposal. The design and construct team shall consist of a Contractor and a Design Engineer.

1. Contractor

   The Contractor is responsible for engineering design, drawing, detailing, Plan preparation, printing, and other Work necessary to modify the Department Plans for the proposed scheme.

2. Design Engineer

   The Design Engineer must be registered as a Professional Engineer in the State of Georgia.

   The Design Engineer is responsible for the following:

   - Remain a part of the team and be available to discuss the Project with the Department at any time during the Project.
   - Keep a record of Project-related communications with the Department, including copies of correspondence and transcripts of conversations.
   - Provide copies of the communication record to the Department and the Contractor.

B. Criteria for Contractor-Proposed Alternates

Contractor-proposed alternates shall be subject to the following criteria:

1. Comply with the traffic handling and sequence of operation schemes found on the Plans and Specifications.
2. Do not change the following items from the Department Plans:
   - Horizontal and vertical alignments
   - Beginning and ending bridge stations
   - Minimum horizontal clearance
   - Span lengths
3. If necessary, reduce vertical clearances from those indicated on the Plans by following the restrictions below and submitting mathematical computations indicating a check of revised vertical clearance.

a. Ensure that the minimum vertical clearance as measured from the lowest point of the bridge superstructure to the roadway beneath is no less than 16.5 ft (5.1 m) or the minimum amount shown on the Plans, whichever is less.

b. Do not reduce the vertical clearance from the bottom of the superstructure to the flood elevations indicated on the Plans if either of these situations occur:

- The proposed alternate involves a structure crossing a waterway.
- The bottom of the beam intrudes into the 100-year flood plain.

4. Construct the bridge superstructure using either a precast reinforced or precast prestressed concrete stem that meet the following criteria:

a. The section depth, measured from the top of the top slab to the bottom of the stem may deviate from the Plans if the vertical clearance requirement in of Subsection 542.3.05.B.3 "Criteria for Contractor-Proposed Alternates," is satisfied.

The stem depth shall be constant throughout the length of each structure unless indicated otherwise on the Plans.

b. The stem and deck thicknesses may vary from the Plans; however, the center-to-center stem spacing shall not vary.

c. Give particular attention to skewed structures. The Plans shall clearly indicate all dapouts and skewed end dimensions.

d. Precast stems shall be fabricated at a site approved by the Department.

e. Precast stems shall be designed for construction without using falsework.

5. Meet the following design criteria for alternate Plans:

a. The bearing area and edge distance requirements follow AASHTO Specifications.

b. The substructure remains as designed on the Department Plans except for the following adjustments:

- Elevations that accommodate a deeper superstructure
- Cap widths that provide adequate bearing area

The Department will not allow adjustments in substructure quantities resulting from adjusting the elevations or cap widths.

c. The design complies with applicable requirements of the following:

- Current AASHTO Specifications for highway bridges, including interim and guide Specifications
- This Specification

If this Specification and the AASHTO Specifications conflict, this Specification shall apply.

d. The structure meets the AASHTO live-loading requirement indicated on the Department Plans.

e. The design dead load of the structure considers the following:

- Weight of the structure
- Weight of the future wearing surface
- Construction loads

f. Precast prestressed concrete stems meets the following requirements:

- Initial tension (before losses from creep and shrinkage) shall not exceed 200 psi (1.38 MPa) or $3\sqrt{f'_{ci}}$
- Final tension (after losses) shall not exceed $3\sqrt{f'_c}$

g. Concrete is normal weight and has a minimum concrete cylinder compression strength at 28 days of at least that indicated on the Plans.

For design purposes, do not consider 28-day concrete strength above 3,000 psi (20 MPa) for cast-in-place deck construction.

h. The deck has drain openings the same shape, size, and location as those shown on the Plans.

i. The barrier curbs are not considered effective in resisting longitudinal stresses and are constructed as shown on the Plans.

j. Reinforcing steel in the superstructure having a vertical clearance of 4 in (100 mm) or less, as measured from the top of the top slab to the top of the reinforcing bar, is epoxy coated if the Plans specify epoxy-coated bars.

   Barrier curb reinforcing steel is epoxy coated as shown on the Department Plans.

k. The minimum cover for reinforcing steel is as shown on the Plans.

l. The effective flange depth is altered as follows:

   1) When calculating design section properties, deduct 1/4 in (6 mm) from the flange depth. However, when calculating the dead load moment, shear, and reaction, include the 1/4 in (6 mm).

   2) Where stay-in-place PSC deck panels are used, deduct 1 in (25 mm) from the effective flange depth when calculating design section properties. However, when calculating the dead load moment, shear, and reaction, include the 1 in. (25 mm).

m. Bearing pads or bearing assemblies are placed normal to beams.

   Place bearing pads or bearing assemblies no closer than 1-1/2 in (40 mm) to the end of the beams and 3 in (75 mm) to the edge of the cap.

n. Sole plates are beveled.

o. Bent tops are not sloped for bearing purposes.

p. Neoprene bearing pads used with a precast beam alternate have 3/16-in (5 mm) sealing ribs on the top and bottom of each neoprene pad.

q. The following dead loads are added to the non-composite loads for metal stay-in-place forms:

Main Slab Reinforcement Normal to Beams	9.25 lbs/ft² (45 kg/m²)
Main Slab Reinforcement Skewed to Beams	16.00 lbs/ft² (78 kg/m²)

542.3.06 Quality Acceptance

General Provisions 101 through 150.

542.3.07 Contractor Warranty and Maintenance

Ensure the following:

- The design meets the Specification requirements for final design loads.
- Calculations and construction engineering ensure that adjustments during construction account for deflections.
- Proper line, grade, structural capacity, and stresses in the substructure and the superstructure are retained during construction.

542.4 Measurement

Material or work required to construct the Contractor-proposed concrete superstructures are not measured for payment.

Payment for the superstructure will be full compensation for furnishing the labor, materials, equipment, tools, and incidentals necessary to complete the Work, including the following:

- Concrete
- Reinforcing steel
- Expansion joint material
- Waterproofing
- Bearing pads
- Barrier concrete
- Design
- Redesign
- Plan preparation
- Shop drawings

- Concrete finish
- Other superstructure elements necessary for constructing the bridge

542.4.01 Limits

A. Additional Compensation

No additional compensation will be made for the following:

- Additional material, equipment, or other items the Department requires after its review of the Contractor's alternate for Project Specification conformance
- Changes or deviations from the Contractor's Plan, as approved by the Department
- Additional material, equipment, or other costs needed because of changes in the Contractor's Plan

542.5 Payment

A. Preparation and Review Time

Charge the time required for preparation of construction plans and design notes to the allowable Contract time.

B. Superstructure

Work performed and materials furnished in place as required by this Specification will be paid for at the Contract Price bid for "Lump Superstr Conc, CL, Br. No." and "Lump Superstr Reinf Steel, Br No."

C. Superstructure—Bridge Complete

Work performed and materials furnished in place as required by this Specification will be paid for at the Contract Price bid for "Lump Construction of Bridge Complete to Bottom of Cap—Alt 4."

542.5.01 Adjustments

A. Partial Payment

The Department will determine a schedule for partial payments for the lump superstructure items.

Section 543—Bridge Complete

543.1 General Description

This work consists of constructing the bridge complete as shown in the Contract. The work includes furnishing and placing all bridge components from the bottom of the cap to the top of the superstructure.

543.1.01 Definitions

General Provisions 101 through 150.

543.1.02 Related References

A. Standard Specifications

Section 211—Bridge Excavation and Backfill

Section 500—Concrete Structures

Section 511—Reinforcement Steel

Sections 500 to 542

B. Referenced Documents

AASHTO Specifications

543.1.03 Submittals

A. Alternative Designs

The Contractor may submit for approval an alternative design for the portion of the bridge between the top of the superstructure and the bottom of the cap. The alternative design shall meet the following criteria:

- The design conforms to current AASHTO Specifications, including the latest Interim Specifications.
- The design live load is HS20-44, including impact.

Submit the design to the Bridge Engineer for review and approval. Do not begin Work or order materials until the Bridge Engineer approves the Plans in writing.

Include the following in the alternative design:

- Three copies of the Plans bearing a Professional Engineer's Stamp of Approval.

  The Engineer may require additional copies of the Plans.
- Two copies of complete design notes for the elements of the structure that are a part of the alternate design.

  Bridge Plans developed and published by industry organizations, Federal Highway Administration, and other States may be acceptable without design notes. However, the Bridge Engineer will judge the acceptability of the design notes and the Plans.

If the Bridge Engineer does not accept the design, construct the bridge according to the Contract Plans.

543.2 Materials

Use materials that meet the requirements of the applicable Materials sections of the Specifications. Material references are listed in the Specification sections pertaining to the item of work.

543.2.01 Delivery, Storage, and Handling

General Provisions 101 through 150.

543.3 Construction Requirements

543.3.01 Personnel

General Provisions 101 through 150.

543.3.02 Equipment

General Provisions 101 through 150.

543.3.03 Preparation

General Provisions 101 through 150.

543.3.04 Fabrication

General Provisions 101 through 150.

543.3.05 Construction

A. Bridge Construction

Construct bridges under this Specification according to the drawings.

B. Order Lengths for Prestressed Concrete Pile

The prestressed concrete pile order lengths shown on the Plans are the estimated pile lengths.

On bridges with more than four bents, the estimated pile lengths shown on the Plans apply to the first four bents constructed. The Engineer will adjust the pile order lengths for the remaining bents based on the pile driving for the first four bents constructed.

Instead of using Plan lengths or lengths determined by the Engineer, the Contractor may determine order lengths by furnishing and driving a test pile in a permanent pile location. There will be no additional compensation for this test pile.

543.3.06 Quality Acceptance

General Provisions 101 through 150.

543.3.07 Contractor Warranty and Maintenance

General Provisions 101 through 150.

543.4 Measurement

Bridge construction complete to the bottom of the substructure caps will be measured for payment based on a lump sum basis for the bridge complete, accepted in place.

543.4.01 Limits

A. Lump Sum Inclusions and Exclusions

The lump sum includes payment for superstructure elements and substructure caps.

The lump sum does not include the cost of piling portions embedded in the substructure caps as shown on the Plans.

B. Concrete Bent Measurement

Where foundation conditions require the use of a concrete bent instead of a trestle pile bent, concrete and reinforcement steel below the bottom of the substructure cap will be measured and paid for according to Section 500, Section 511, and Section 211.

543.5 Payment

This work will be paid for at the Contract Unit Price bid. Payment will be full compensation for furnishing all materials and completing the Item according to these Specifications.

Payment will be made under:

Item No. 543-1100	Construction of bridge complete to bottom of cap	Per lump sum

543.5.01 Adjustments

Statements for partial payment include:

Item	Payment
Caps, each	20% of Item 543 divided by number of caps
Superstructure, per span	80% of Item 543 divided by number of spans

Section 544—Deck Drain System

544.1 General Description

This work includes furnishing deck drainage systems according to Plan details.

544.1.01 Definitions

General Provisions 101 through 150.

544.1.02 Related References

A. Standard Specifications

Section 645—Repair of Galvanized Coatings

Section 870—Paint

B. Referenced Documents

General Provisions 101 through 150.

544.1.03 Submittals

Submit complete detail Shop Drawings for the deck drain system to the Engineer for approval.

If the deck drain system is for a railway, the Engineer will submit the Shop Drawings to the Chief Engineer of the railway company for approval.

In either case, obtain approval from the Engineer prior to fabrication or installation.

544.2 Materials

Use materials that meet Plan requirements. Use commercial-grade steel hardware (clips, brackets, bars, etc.) unless otherwise noted on the Plans. Use galvanizing repair compound that meets the requirements of Section 870.

544.2.01 Delivery, Storage, and Handling

General Provisions 101 through 150.

544.3 Construction Requirements

544.3.01 Personnel

General Provisions 101 through 150.

544.3.02 Equipment

General Provisions 101 through 150.

544.3.03 Preparation

General Provisions 101 through 150.

544.3.04 Fabrication

General Provisions 101 through 150.

544.3.05 Construction

Repair damaged galvanized areas according to Section 645.

Install deck drain systems according to the Plans.

544.3.06 Quality Acceptance

General Provisions 101 through 150.

544.3.07 Contractor Warranty and Maintenance

General Provisions 101 through 150.

544.4 Measurement

This work is not measured separately for payment.

544.4.01 Limits

General Provisions 101 through 150.

544.5 Payment

This work will be paid for at the Contract Price for deck drain system complete in place.

Payment will be made under:

Item No. 544	Deck drain system—bridge no.___	Per lump sum

544.5.01 Adjustments

General Provisions 101 through 150.

Section 547—Pile Encasement

547.1 General Description

This Item includes furnishing all labor, materials, equipment, and services necessary to clean and encase steel piles as indicated on the Plans. Complete all work according to this Specification and to the Engineer's satisfaction.

547.1.01 Definitions

General Provisions 101 through 150.

547.1.02 Related References

A. Standard Specifications

Section 500—Concrete Structures

Section 514—Epoxy Coated Steel Reinforcement

Section 801—Fine Aggregate

B. Referenced Documents

ASTM 2262

ASTM C 939

ASTM D 737

ASTM D 1682

547.1.03 Submittals

When substituting equal products or systems for one of the two encasement procedures noted in this Specification, obtain approval from the Engineer before use. Submit complete data, including:

- Company name and address
- Description of the product or system previously used on similar projects and how they were used
- List of products and their application
- Length of time the products have been in use (at least three years)
- Length of time the applicator has been in business

547.2 Materials

A. Fabric for Pile Jacket

For encasement systems, use pile jacket fabric that conforms to the following requirements:

Requirements for Pile Jacket Material	
Warp	21 ends per inch (25 mm) 1260 denier
Fill	Nylon 66 fill -- 20 picks per inch (25 mm) 1840 denier
Approximate Weight	Dupont Cordura -- 9 oz per sq yd (305 g/m^2)
Tensile Strength	(ASTM D 1682 grab method at 1 in/min (25.4 mm/min) in excess of 400 lbs/inch (70 N per mm) in both warp and fill directions
Tearing Strength	(Tongue method ASTM 2262)—100 lbs (445 N)
Air Permeability	(ASTM D 737) in excess of 100 ft (30 m) per min.

B. Mortar for Pile Encasement Procedure 2

Maintain mortar at a uniform consistency to avoid pumping problems. When using concrete sand, keep mortar consistency in the 12-second to 15-second range through the 3/4 in (19 mm) orifice of a standard flow cone, as described in ASTM C 939. When using mason's sand, keep consistency in the 30- to 35- second range through a 1/2 in (13 mm) orifice.

1. Admixtures

   When recommended by the manufacturer, use admixtures such as grout super plasticizer, water-reducing agent, or air-entraining agent to improve pumpability or to retard setting time. The Department recommends that a pozzolanic admixture be substituted for up to 30 percent of the cement.

2. Mortar mix for Pile Encasement Procedure 2

   Use mortar mix for pile encasement that conforms to the following proportions:

Cement	1,130 lbs/yd^3 (670 kg/m^3)
Sand, Concrete, or Masonry	2,000 lbs/yd^3 (1187 kg/m^3) Subsection 801.2.02
Water	565 lbs/yd^3 (335 kg/m^3)
Water/Cement Ratio	0.50

C. Epoxy-Coated Steel Reinforcement

Use epoxy-coated steel reinforcement that conforms to Subsection 514.2, "Materials."

D. Class A Concrete Deposited in Water

Use concrete with a 10 percent increase in cement factor. Ensure that concrete is air entrained according to Section 500, with a maximum slump of 8 in. (200 mm).

547.2.01 Delivery, Storage, and Handling

General Provisions 101 through 150.

547.3 Construction Requirements

General Provisions 101 through 150.

547.3.01 Personnel

General Provisions 101 through 150.

547.3.02 Equipment

General Provisions 101 through 150.

547.3.03 Preparation

A. Cleaning

Sandblast piles on existing structures to be encased to remove loose dirt, rust, scale, and other deleterious material from the surface. Rinse thoroughly with clean water. Do not sandblast piles to be used on new construction. Clean new piles with a wire brush to free them of rust or other loose material.

547.3.04 Fabrication

General Provisions 101 through 150.

547.3.05 Construction

A. Encasement

To perform encasement, follow the details of Figure 1 (Figure 1 metric) and one of the following procedures:

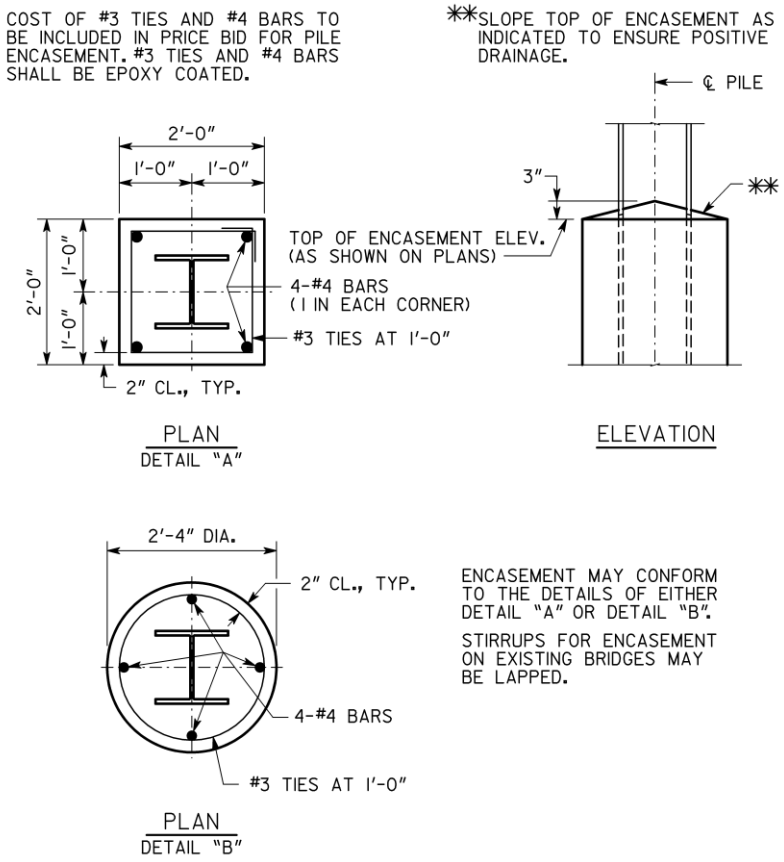
COST OF #3 TIES AND #4 BARS TO BE INCLUDED IN PRICE BID FOR PILE ENCASEMENT. #3 TIES AND #4 BARS SHALL BE EPOXY COATED.
**SLOPE TOP OF ENCASEMENT AS INDICATED TO ENSURE POSITIVE DRAINAGE.
℄ PILE
2'-0"
1'-0"
1'-0"
2'-0"
1'-0"
1'-0"
3"
**
TOP OF ENCASEMENT ELEV. (AS SHOWN ON PLANS)
4-#4 BARS (1 IN EACH CORNER)
#3 TIES AT 1'-0"
2" CL., TYP.
PLAN
DETAIL "A"
ELEVATION
2'-4" DIA.
2" CL., TYP.
4-#4 BARS
#3 TIES AT 1'-0"
PLAN
DETAIL "B"
ENCASEMENT MAY CONFORM TO THE DETAILS OF EITHER DETAIL "A" OR DETAIL "B".
STIRRUPS FOR ENCASEMENT ON EXISTING BRIDGES MAY BE LAPPED.

Figure 1

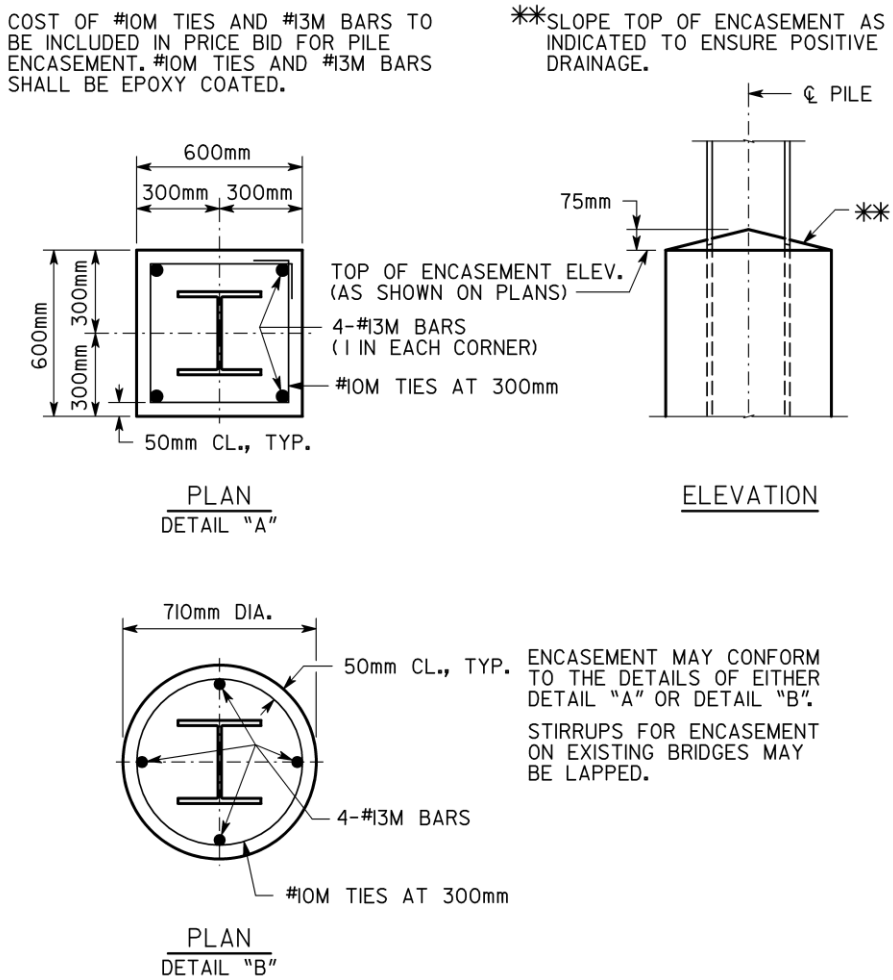

Figure 1 (metric)

1. Procedure 1

   Form the pile encasement with class “A” concrete deposited in water and epoxy-coated steel reinforcement.

   Place the concrete according to Subsection 500.2.01.E, “Concrete Handling and Placing,” where site construction conditions allow. The Department will not require cofferdams. Concrete may be deposited in water.

2. Procedure 2

   Form the pile encasement with a Fabriform Pile Jacket System or an approved equal.

   Pump mortar into the fabric jacket using two tremie hoses extending to the bottom of the jacket. Withdraw these hoses during pumping so that the lower end remains 1 to 2 ft (300 to 600 mm) under the rising mortar surface.

   Pump mortar at a rate to provide a rise of approximately 6 in (150 mm) per minute.

B. Installation

After cleaning the pile, place steel reinforcement as shown in Figure 1 (Figure 1 metric). Place spacers, tremie hoses, and fabric jacket or forms according to the Specifications or the manufacturer-recommended methods. Fill the encasement with concrete or mortar.

547.3.06 Quality Acceptance

A. Limits of Encasement

Ensure that the pile encasement extends from 2 ft (600 mm) below the existing streambed to the top elevation for pile encasement, as shown on the Plans.

547.3.07 Contractor Warranty and Maintenance

General Provisions 101 through 150.

547.4 Measurement

Pile encasement is measured by the linear foot(meter) for each pile size indicated.

547.4.01 Limits

General Provisions 101 through 150.

547.5 Payment

Pile encasements will be paid for at the Contract Price per linear foot (meter) for the pile size indicated, complete in place as specified.

This payment will be full compensation for furnishing all materials, tools, labor, equipment, and other items necessary to complete the Work.

Payment will be made under:

Item No. 547	Pile encasement, ___in.(mm) pile	Per linear foot (meter)

547.5.01 Adjustments

General Provisions 101 through 150.

Section 550—Storm Drain Pipe, Pipe-Arch Culverts, and Side Drain Pipe

550.1 General Description

This work includes furnishing and installing the following:

- Storm drain pipe
- Pipe-arch and elliptical culverts
- Side drain pipe flared end sections
- Tapered pipe inlets

Install structures according to the Specifications and the details shown on the Plans, or as directed by the Engineer.

550.1.01 Definitions

Side Drain – All driveway pipe (commercial, non-commercial, residential, utility, farm, logging, and mining).

General Provisions 101 through 150.

550.1.02 Related References

A. Standard Specifications

Section 205—Roadway Excavation

Section 207—Excavation and Backfill for Minor Structures

Section 208—Embankments

Section 645—Repair of Galvanized Coatings

Section 815—Graded Aggregate

Section 834—Masonry Materials

Section 840—Corrugated Aluminum Alloy Pipe

Section 841—Iron Pipe

Section 843—Concrete Pipe

Section 844—Steel Pipe

Section 845—Smooth Lined Corrugated High Density Polyethylene (HDPE) Culvert Pipe

Section 846—Polyvinyl chloride (PVC) Drain Pipe

Section 847—Miscellaneous Pipe

Section 848—Pipe Appurtenances

B. Referenced Documents

General Provisions 101 through 150.

GDOT Manual on Drainage Design for Highways

Ga. Std. 1030D

Ga. Std. 1030P

GDT 136

550.1.03 Submittals

General Provisions 101 through 150.

550.2 Materials

Ensure materials meet the requirements of the following Specifications:

Material	Section
Backfill Materials	207
Graded Aggregate	815
Reinforced Concrete Pipe	843.2.01
Nonreinforced Concrete Pipe	843.2.02
Mortar And Grout	834.2.03
Bituminous Plastic Cement	848.2.05
Rubber Type Gasket Joints (Concrete Pipe)	848.2.01
Preformed Plastic Gaskets	848.2.06
Corrugated Steel Pipe	844.2.01
Bituminous Coated Corrugated Steel Pipe	844.2.02
Corrugated Aluminum Alloy Pipe	840.2.01
Bituminous Coated Corrugated Aluminum Pipe	840.2.03

Material	Section
Aluminized Type 2 Corrugated Steel Pipe	844.2.06
Ductile Iron Pipe, Fittings and Joints	841
Precoated, Galvanized Steel Culverts	844.2.05
Smooth Lined Corrugated High Density (HDPE) Polyethylene Culvert Pipe	845.2.01
Polyvinyl Chloride (PVC) Profile Wall Drain Pipe	846
Polyvinyl Chloride (PVC) Corrugated Smooth Interior Drain Pipe	846
Miscellaneous Pipe	847

Use any of the following types of pipe:

- Reinforced concrete
- Nonreinforced concrete
- Corrugated steel or Aluminum
- Smooth-lined corrugated high density polyethylene (HDPE)
- Ductile iron
- Polyvinyl Chloride (PVC) Profile Wall Drain Pipe
- Polyvinyl Chloride (PVC) Corrugated Smooth Interior Drain Pipe

Use the type of pipe designated on the Plans, or acceptable alternate types when applicable. For a display of acceptable alternate pipe types see Selection Guideline for Culvert, Slope and Underdrain Pipe in Chapter 10 – Material Selection of the Department's Manual on Drainage Design for Highways. This document summarizes general applications for pipe.

For concrete, corrugated steel and aluminum pipes see Ga. Std. 1030D for minimum thicknesses, minimum cover, maximum fill, allowable pipe diameters and trench construction detail.

For HDPE and PVC pipes see Ga. Std. 1030P for minimum cover, maximum fill, allowable pipe diameters and trench construction details.

550.2.01 Delivery, Storage, and Handling

General Provisions 101 through 150.

550.3 Construction Requirements

550.3.01 Personnel

General Provisions 101 through 150.

550.3.02 Equipment

General Provisions 101 through 150.

550.3.03 Preparation and Backfill

Before installing pipe, shape the foundation material as shown on the Plans.

Prepare structure excavations and foundation according to Section 207. Except, use the following backfill material requirements for HDPE and PVC pipe.

1. For cross drain applications use graded aggregate material meeting Subsection 815.2.01.
2. For Longitudinal and side drain applications use Class II B2 soil or better per Subsection 810.2.01, if Class II B2 or better is not available use material conforming to Subsection 550.3.03.1.

550.3.04 Fabrication

General Provisions 101 through 150.

550.3.05 Construction

A. Drainage

Provide necessary temporary drainage. Periodically remove any debris or silt constricting the pipe flow to maintain drainage throughout the life of the Contract.

B. Damage

Protect the structure by providing sufficient depth and width of compacted backfill before allowing construction over a culvert. Repair damage or displacement from traffic or erosion occurring after installing and backfilling at no additional cost to the Department.

C. Installation

Check vertical and horizontal alignment of the pipe culvert or storm drain pipe barrel by sighting along the crown, invert and sides of the pipe, and by checking for sagging, faulting and invert heaving. Repair any issues involving incorrect horizontal and/or vertical alignment before backfilling pipe.

1. Concrete Pipe

   Lay sections in a prepared trench with the socket ends pointing upstream. Join section using either rubber gasket or preformed flexible sealant, installed according to the manufacturer's recommendations.

2. Ductile Iron Pipe

   Lay pipe sections in a prepared trench, with bells pointing upstream. Construct joints according to Subsection 841.2.02.A.

3. Corrugated Aluminum or Steel Pipe and Pipe-Arches

   Lay pipe sections in a prepared trench, with outside laps of circumferential joints pointing upstream and longitudinal joints at the sides. Join the sections with coupling bands, fastened by two or more bolts. Before backfilling the structure:

   a. Repair exposed base metal in metal coating according to Section 645.

   b. Recoat exposed base metal in bituminous coating with asphalt.

4. Smooth-Lined Corrugated HDPE Pipe

   Install smooth-lined corrugated HDPE pipe according to ASTM D 2321. Use fitting and couplings that comply with the joint performance criteria of AASHTO Standard Specifications for Highway Bridges, Division II. Ensure all joints are "silt tight" as stated in the AASHTO bridge specifications.

5. Specials (Wyes, Tees, and Bends)

   Install wyes, tees, and bends as shown on the Plans or as directed.

6. Tapered Pipe Inlets

   Locate and install tapered pipe inlet end sections as shown on the Plans or as directed.

7. Elongation

   Elongate metal pipe as shown on the Plans. Order the elongation of the vertical axis of the pipe to be done in the shop.

   Ensure the manufacturer ship metal pipe with wire ties in the pipe ends. Remove wire-ties immediately after completing the fill.

8. Flared End Sections

   Use flared end sections on the inlet, outlet, or on both ends of storm drain pipe, according to Plan details.

9. PVC Drain Pipe

Install polyvinyl chloride (PVC) drain pipe according to ASTM D 2321. Use fittings and couplings complying with the joint performance criteria of AASHTO Standard Specifications for Highway Bridges, Division II. Ensure all joints are "silt tight" as stated in the AASHTO bridge specifications.

550.3.06 Quality Acceptance

A. Post Installation Inspection

Inspect 100% of pipe under the roadbed, 100% of pipe in a closed drainage system and a minimum of 10.0 % of all other locations except in side drain application which are short enough to inspect from each end of the pipe. Conduct post installation inspections in accordance with the requirements of this Specification and GDT 136.

Before post installation inspection, dewater installed pipe (if necessary) and provide the Engineer with a post installation inspection schedule. Notify the Engineer at least seven days in advance of beginning inspection. Perform post installation inspections once compacted backfill has reached a depth of 8 feet or after completion of the pipe installation and final cover, which includes the embankment and all non-asphalt bases and/or subgrades. Notify the Engineer of problems found during the inspection. The Engineer will determine if corrective action is necessary.

Perform post installation inspection with the use of low barrel distortion video equipment with laser profile technology, non-contact video micrometer and associated software.

Video and laser profiling and measurement technology must be certified by the company performing the work to meet the requirements of GDT 136. Inspection contractor personnel completing remote inspections shall be NASSCO – PACP Certified Technicians.

For video recorded, laser profiled pipe indicating deflection is in excess of Specification requirements, the Contractor may elect to further test the pipe with the use of a mandrel. Ensure mandrel meets requirements of GDT 136 and the Engineer has approved before use. Pull the mandrel by hand.

Manual post installation inspection allowed for pipe diameters greater than 48 inches per Subsection 550.3.06.B.

Re-inspect 100% of pipe remediation locations or where replacement was required.

B. Manual Post Installation Inspections

Perform a manual inspection by entering the pipe structure to record video and to make measurements. For all pipe structures considered a confined space, provide entry for all project inspection personnel according to OSHA requirements. Furnish a video recording of each inspection. On the recording, identify the date and time of the inspection, a description of the pipe structure, location, and viewing direction. Record the entire run of pipe. Provide a light source which allows observation of all areas of concern on the video recording. Furnish the video recording in a digital, reproducible format on one of the following media types: DVD or CD.

Measure the deflection of the pipe using either a metal or fabric tape and read to the nearest 0.5 inch (10 mm). Measure crack width using either a crack comparator or a feeler gage capable of measuring 0.01 inch (0.25 mm). Measure joint gaps using a tape or ruler and read to the nearest 0.5 inch (10 mm). Other measuring devices may be used if approved by the Engineer.

Record the measurements and include them in the inspection report. Measure and record the following:

1. The location, length and greatest width of each crack.
2. Smallest inside diameter three times for each pipe section in the run. Take the first measurement vertically from the crown to invert (12 o'clock to 6 o'clock positions). Take the second measurement by rotating 60 degrees from vertical (2 o'clock to 8 o'clock positions). Take the third measurement by rotating 120 degrees from vertical (4 o'clock to 10 o'clock positions). For all measurements, stretch tape to full extent across inside of pipe.
3. Widest gap at each joint in the run.

Record the location and describe other defects not listed above. For each measurement location in a pipe, record the length from the nearest drainage structure.

C. Inspection Report

Submit inspection report to the Engineer after completion of the required post installation inspection. Ensure inspection report meets the requirements of this Specification and GDT 136.

D. Requirements for Concrete Pipe:

1. Joints**:** Note differential movement, cracks, spalling, improper gasket placement, movement or settlement of pipe sections, and leakage in the inspection report. Repair or replace pipe sections to the satisfaction of the Engineer where joint separation is greater than one inch. Repair or replace pipe sections where soil migration through the joint is occurring.
2. Longitudinal and Transverse Cracks: Cracks with a width less than 0.01 inch (0.25 mm) are considered hairline and minor and only need to be noted in the inspection report, no corrective action is necessary. When cracks are wider than 0.01 inch (0.25 mm) and extend for a length of 12 inch (300 mm) or more, regardless of position in the wall of the pipe, measure the width, length, and locations of the cracks and diameter of the pipe, both horizontally and vertically, use remediation methods in accordance with recommendations of the pipe manufacturer and submit to the Engineer for review and approval an evaluation utilizing a Professional Engineer that takes into consideration structural integrity, environmental conditions, and the design service life of the pipe.

   Seal by a method approved by the Engineer cracks having widths equal to or greater than 0.01 inch (0.25mm) that extend for a length of 12 inch (300 mm) or more and determined to be detrimental. Remediate or replace pipe with cracks widths greater than 0.1 inch (2.5 mm) and determined by the Engineer to be beyond satisfactory structural repair. Repair or replace pipes having displacement across the crack.

Requirements for Smooth-Lined Corrugated HDPE & PVC Drain Pipe

1. **Joints:** Remediate pipe showing evidence of crushing at the joints. Note differential movement, improper joint sealing, movement or settlement of pipe sections, and leakage in the inspection report. Remediate joint separation of greater than 1 inch. Repair or replace pipe sections where soil migration through the joint is occurring.
2. **Cracks:** Remediate cracks or splits in the interior wall of the pipe. Use remediation methods in accordance with recommendations of the pipe manufacturer and accepted and authorized by the Engineer.
3. **Buckling, bulging, and racking:** Note in the inspection report flat spots or dents at the crown, sides or flowline of the pipe due to racking. Note areas of wall buckling and bulging in the inspection report. The Engineer will determine if corrective action is necessary.
4. **Deflection:** Where pipe deflection exceeds 5% of the nominal diameter, submit to the Engineer for review and approval an evaluation utilizing a Professional Engineer taking into consideration the severity of the deflection, structural integrity, environmental conditions, and the design service life of the pipe. Remediate or replace pipe where the evaluation finds the deflection could be problematic or where pipe deflection exceeds 7.5% of the nominal diameter.

F. Requirements for Corrugated Aluminum or Coated Steel Pipe

1. **Joints:** Remediate pipe showing evidence of crushing at the joints. Note differential movement, improper joint sealing, movement or settlement of pipe sections, and leakage in the inspection report. Remediate joint separation of greater than 1 inch. Repair or replace pipe sections where soil migration through the joint is occurring.
2. **Cracks:** Remediate cracks or splits in the interior wall of the pipe. Use remediation methods in accordance with recommendations of the pipe manufacturer and accepted and authorized by the Engineer.
3. **Buckling, bulging, and racking:** Note flat spots or dents at the crown, sides or flowline of the pipe due to racking in the inspection report. Note areas of wall buckling and bulging in the inspection report. The Engineer will determine if an additional evaluation by a Professional Engineer is required. Remediate or replace pipe where the evaluation finds the damaged section could be problematic.

4. **Deflection:** Where pipe deflection exceeds 5% of the nominal diameter, submit to the Engineer for review and approval an evaluation utilizing a Professional Engineer that takes into consideration the severity of the deflection, structural integrity, environmental conditions, and the design service life of the pipe. Remediate or replace pipe where the evaluation finds the deflection could be problematic or where pipe deflection exceeds 7.5% of the nominal diameter.
5. **Coating:** Note areas of the pipe where the original coating has been scratched, scoured or peeled in the inspection report. The Engineer will determine if repair is necessary. Use remediation methods in accordance with recommendations of the pipe manufacturer and accepted and authorized by the Engineer.

550.3.07 Contractor Warranty and Maintenance

General Provisions 101 through 150.

550.4 Measurement

A. Excavation and Backfill

Backfill materials types II and III are measured according to Subsection 207.4, “Measurement.”

B. Flat Bottom and Circular Pipe (All Types)

The overall length of pipe installed, excluding tapered inlets, is measured in linear feet (meters), along the central axis of the diameter of the pipe. Wyes, tees, and bends are included in this measurement.

C. Pipe-Arches

The overall length of pipe-arch installed is measured in linear feet (meters), along the bottom center line of the pipe.

D. Multiple Installations

In multiple installations, each single line of culvert structure is measured separately.

E. Tapered Pipe Inlets

Tapered pipe inlet sections are measured as a unit; do not include them in the overall length of the pipe.

F. Flared-End Sections

Flared-end sections are measured separately by the unit and not included in the overall pipe length.

G. Smooth-Flow Pipe

Smooth-flow pipe is measured by the linear foot (meter) along the pipe invert.

H. Elliptical Pipe

Elliptical pipe is measured in linear feet (meters) along the bottom center line of the pipe.

I. Post Installation Inspection

No measurement will be made for post installation inspection.

550.4.01 Limits

Excavation and normal backfill are not measured for payment.

550.5 Payment

A. Backfill

Backfill will be paid for according to Section 207.

B. Pipe Installations

Pipe installations complete in place and accepted will be paid for at the Contract Price for each item.

This payment is full compensation for excavating, furnishing, and hauling materials; installing, cutting pipe where necessary; repairing or replacing damaged sections; post installation inspection, making necessary connections; strutting, elongating, providing temporary drainage; joining an extension to an existing structure where required; and removing, disposing of, or using excavated material as directed by the Engineer.

1. Smooth Flow Pipe

   The quantity of each diameter and steel thickness of smooth flow pipe as measured will be paid for at the Contract Unit Price per linear foot (meter) bid for the various sizes. Payment is full compensation for furnishing labor, materials, tools, O-ring mechanical joints, equipment, and incidentals to complete this Item, including removing and disposing excavation material.

2. Flared-End Sections

   Flared-end sections, measured as specified above, will be paid for at the Contract Unit Price for each section of the specified size.

Payment will also include sawing, removing, and replacing existing pavement removed to install a new drainage structure.

C. Post Installation Inspection

No separate payment will be made for this work. Include the cost in the bid submitted for this pay item.

Payment for this item is made as follows:

One hundred percent of the Contract Price bid per linear foot (meter) is paid when the pipe is installed per the specifications including the required material documentation. The Contract Price is paid before post installation inspection.

Payment will be made under:

Item No. 550	Storm drain pipe___ in (mm), H=___	Per linear foot (meter)
Item No. 550	Side drain pipe___ in (mm), H=___	Per linear foot (meter)
Item No. 550	Pipe arch (span) ____in (mm) x (rise) ___in(mm)	Per linear foot (meter)
Item No. 550	Tapered pipe inlet ___ in (mm),	Per each
Item No. 550	Flared-end section ___ in (mm),	Per each
Item No. 550	Elliptical pipe___ in (mm) wide x ___ in (mm) high	Per linear foot (meter)

550.5.01 Adjustments

Excavation will not be paid for separately, but the other provisions of Section 205 and Section 208 shall govern.

Section 551—Pile Protection in Earth Walls

551.1 General Description

This work includes protecting bridge end bent piles located in the stabilized backfill of earth retaining walls.

551.1.01 Definitions

General Provisions 101 through 150.

551.1.02 Related References

A. Standard Specifications

Section 535—Painting Structures

Section 801—Fine Aggregate

Section 806—Aggregate for Drainage

B. Referenced Documents

ASTM A 123/A 123M

ASTM B 512

ASTM D 92

ASTM D 95

ASTM D 992

ASTM D 1241

ASTM D 1743

ASTM D 1621

ASTM D 1622

APHA 426 D

551.1.03 Submittals

General Provisions 101 through 150.

551.2 Materials

A. Cans

Place cans of smooth or corrugated steel pipe over piling. Use cans thick enough to prevent buckling while placing and compacting earth-stabilized embankment. Coat both inside and outside of the cans with either of the following:

Material	Section
2P Coating	535.3.03.D
Galvanizing	ASTM A 123/A 123M

B. Backfilling Cans

Use aggregate for the backfilling of cans according to Section 801 or Section 806.

C. Corrosion Inhibitor (Grease)

Use grease that conforms to the following requirements.

Drop point 350 °F (175 °C) minimum		ASTM D 1241
Flash point 350 °F (175 °C) minimum		ASTM D 92
Water content 0.1% maximum		ASTM D 95
Rust test		ASTM D 1743
Water soluble ions	Chlorides, 10 PPM maximum	ASTM B 512
	Nitrates, 10 PPM maximum	ASTM D 992
	Sulfides, 10 PPM maximum	APHA 426 D

D. Polyurethane Foam

Use foam approved for commercial use in Georgia that meets the following requirements:

Minimum density 1.5 lbs/ft^3 (24 kg/m^3)	ASTM D 1622
Compressive strength perpendicular 16 psi (110 kPa) @ 6 percent	ASTM D 1621

E. Polypropylene Fluted Sheets

Use “plastic cardboard” ultra-violet stabilized sheets that are at least 48 in (1.2 m) long. Score or grease sheets to fold around piling and into H-pile web. When adding sections, use at least a 3 in. (75 mm) (shingle style) overlap.

F. Duct Tape

Use duct tape to patch and secure plastic cardboard and polyurethane. Keep duct tape from grease or pile. Use duct tape in sandy backfill to seal overlaps and prevent sand infiltration.

551.2.01 Delivery, Storage, and Handling

General Provisions 101 through 150.

551.3 Construction Requirements

551.3.01 Personnel

General Provisions 101 through 150.

551.3.02 Equipment

General Provisions 101 through 150.

551.3.03 Preparation

General Provisions 101 through 150.

551.3.04 Fabrication

General Provisions 101 through 150.

551.3.05 Construction

When the Plans require, protect end bent piles from negative skin friction by using one of the following methods.

A. Method A

After driving the end bent piles and before installing the earth reinforcing elements:

1. Place a cylindrical can over each pile to prevent the earth wall backfill material from contacting the pile.

Use a can large enough in diameter to give a 1in (25 mm) minimum clearance from the pile to the inside of the can.

2. Place a spacer between the pile and the can to prevent the can from contacting the pile during wall backfilling. Extend the cans from the bottom of the earth-stabilized backfill to the bottom of the bridge end bent cap.
3. After positioning the cans, seal them at the top while backfilling to keep rubbish or aggregate out of the can. Keep the cans sealed until fill settlement time has expired.
4. When the wall backfill has reached the bottom of the cap and fill settlement time has expired, fill the cans with aggregate.

B. Method B

Cover the piles with the following amounts of corrosion-inhibiting grease as follows:

- Steel piling = 1/16 in (2 mm) minimum
- Concrete piling = 1/4 in (6 mm) minimum

1. Apply grease only after driving the piles. Treat only the pile portion that will be in contact with the wall backfill.
2. In addition to the grease, install a urethane or polypropylene sleeve to protect the grease coating from the backfill.
3. Use spray-on or preformed sleeves. Replace portions of the sleeve damaged or removed by construction activities during backfill.

551.3.06 Quality Acceptance

General Provisions 101 through 150.

551.3.07 Contractor Warranty and Maintenance

General Provisions 101 through 150.

551.4 Measurement

No separate measurement for payment will be made of the materials and labor required to conform with this Specification.

551.4.01 Limits

General Provisions 101 through 150.

551.5 Payment

No separate payment will be made for pile protection. Include all costs incurred in complying with this Specification in the price bid for the piling.

551.5.01 Adjustments

General Provisions 101 through 150.

Section 555—Tunnel Liner

555.1 General Description

This work includes:

- Driving a tunnel
- Furnishing and installing steel plates for tunnel liner
- Furnishing and erecting brick portals to close each end of the tunnel, when required
- Pressure grouting

Construct to Plan line, grade, and dimensions, according to the applicable Specifications.

555.1.01 Definitions

General Provisions 101 through 150.

555.1.02 Related References

A. Standard Specifications

Section 608—Brick Masonry

Section 615—Jacking or Boring Pipe

Section 645—Repair of Galvanized Coatings

Section 834—Masonry Materials

Section 844—Steel Pipe

B. Referenced Documents

AASHTO Design Specification for Tunneling

AASHTO Standard Specifications for Highway Bridges, Section 26

Manual on Uniform Traffic Control Devices

ASTM A 569/A 569M

555.1.03 Submittals

A. Special Permit Application

Before working with explosives, apply to the Department for a special permit. This permit will be in addition to a tunneling permit not involving explosives.

Special permits will be issued when the proposed operational procedures outlined in the permit form are submitted and approved.

B. Design Data

For Projects not under Contract to the Department but are being performed under permit, the owner shall submit complete design data including working or Shop Drawings for approval before receiving the permit. Include the following applicable design data:

- Design data as required by AASHTO design specification for tunneling
- Subsoil surveys, including the elevation of the water table and the classification and relative density of the soils from the ground line to 3 ft (1 m) below the tunnel liner
- Rock coring data, including rock type and core recovery, where required

- Water control plans, where required

C. Repair Plan

If tunneling damages the roadway, submit a roadway repair plan for approval.

555.2 Materials

Ensure that materials meet the following requirements:

Material	Specification Section
Liner Plates	ASTM: A 569/A 569M
Galvanizing Bituminous Coating and Bolts	844
Brick for Portal	608 834.2.01

A. Liner Plates

Construct the completed liner with a series of steel liner plates assembled with staggered longitudinal joints and fabricated to fit the tunnel cross section.

1. Characteristics

   Use hot-dipped galvanized, bituminous-coated steel of the size, thickness, and sectional modulus specified.

   Use plates made of hot-rolled, cold-formed steel that conform to ASTM A 569/A 569 M. Use plates with the following mechanical properties before cold forming:

   - Tensile strength = 42,000 psi (290 MPa)
   - Yield strength = 28,000 psi (190 MPa)
   - Elongation, 2 in (50 mm) = 30 percent

2. Grout Intrusion Nipples

   Provide grout intrusion nipples 2 in (50 mm) or larger in diameter in the top plates at intervals 10 ft (3 m) or less. This will permit grouting while the tunnel liner is erected. For larger tunnels, or where conditions make more grout openings advisable, install additional plates with nipples at the top quarter points and/or on each side between the top openings. Stagger these additional openings, but keep the distance between them 10 ft (3 m) or less in any one line.

3. Flanged Joints

   Form plates to provide circumferential flanged joints. Use longitudinal joints that are flanged or offset lap seam type.

   Punch plates for bolting on both longitudinal and circumferential seams or joints.

   Space bolts in circumferential flanges according to the manufacturer’s standard spacing. Space bolts a multiple of the plate length so that plates with the same curvature are interchangeable and will permit staggering of longitudinal seams.

4. Longitudinal Seams

   For lapped longitudinal seams, ensure that bolt size and spacing is according to the manufacturer’s standard, but meets the longitudinal seam strength requirements of Section 16 of AASHTO Standard Specifications for Highway Bridges. Galvanizing Bituminous Coating and Bolts shall be in compliance with applicable information in Section 844.

B. Grout

Use grout that consists of:

- One part Portland cement
- Two parts masonry lime
- Four parts mortar sand

- Two percent of an approved admixture, (i.e., Bentonite, Septamine Stearex, or Hydrocide Liquid)
- A retardant, where required

Use enough mixing water to produce a workable mixture of grout capable of being pumped into the voids created by tunneling.

C. Brick

Brick for portal shall conform to Section 608 and Subsection 834.2.03.

555.2.01 Delivery, Storage, and Handling

General Provisions 101 through 150.

555.3 Construction Requirements

555.3.01 Personnel

General Provisions 101 through 150.

555.3.02 Equipment

A. Pumping Equipment

Provide pumping equipment for grouting operations. Use equipment with enough pump horsepower and grouting line pressure to completely fill voids without buckling or shifting the liner plates or damaging the roadway.

B. Water Control

When water control is required, operate well points or other drainage systems in the vicinity of the tunnel construction limits.

555.3.03 Preparation

General Provisions 101 through 150.

555.3.04 Fabrication

General Provisions 101 through 150.

555.3.05 Construction

Excavate the tunnel using any of the following procedures:

- Full face
- Heading and bench
- Multiple drift

Do not use a full or partial shield, a tunneling machine, or other equipment that exerts a force on the liner plates to propel, steer, or stabilize the equipment.

Prevent the overpassing roadway or railway section from settling when constructing tunnels by using:

- Poling plates
- Brest boards
- Shields
- Soil solidification
- A combination of these methods

A. Installation of Liner Plates

Use the same type of liner plates for the full length of the tunnel. Flanged and lapped seam methods of construction are acceptable.

1. General

   Install self-supporting steel liner plates according to the manufacturer's recommendations. Do not leave more than 5 ft (1.5 m) of tunnel unlined while tunneling. Do not leave more than 1 ft (300 mm) of tunnel unlined at the end of the day's operation.

2. Sealing

   Before grouting tunnel liner segments, seal that segment sufficiently between the liner plates and the surrounding soil to retain the grouting pressure. Place the seals in these locations:

   - At the tunnel entrance
   - Between grout intrusion nipples
   - Within 1 ft (300 mm) of the end of the tunnel

3. Pressure Grouting

   Pressure grout voids in the area outside the plates every 10 ft (3 m) at the end of the work shift. Grout more frequently if soil conditions dictate.

4. Repair

   Repair damaged spelter coating according to Section 645. Replace plates with damaged spelter or bituminous coatings at no additional cost to the Department if the Engineer determines they cannot be repaired.

B. Safety

Schedule the Work to avoid interfering with or endangering traffic flow on the highway or railway. Follow required safety measures specified in the Manual on Uniform Traffic Control Devices.

1. Begin tunneling at one end of a pit that has been sheeted and shored as necessary. Comply with Section 615. Perform work below the level of the roadbed.
2. Complete tunneling at one location before beginning work at another.
3. If the Engineer determines that tunneling is endangering overpassing roadway or the traveling public, stop tunneling until making the necessary corrections.
4. Provide a well-braced, temporary bulkhead against the face of the excavation when work stops while the heading is within 20 ft (6 m) of railroad tracks or highway pavement.
5. If distress occurs to roadway due to tunneling, the Contractor shall submit for approval a Plan to repair the roadway.

C. Portals

Close tunnel portals at each end using a three-course mortared brick wall according to Plan details. Erect one of the three courses inside the liner.

555.3.06 Quality Acceptance

Ensure that the tunnel has a diameter essentially the same as the outside diameter of the liner plates.

555.3.07 Contractor Warranty and Maintenance

General Provisions 101 through 150.

555.4 Measurement

Tunnel liner installed according to the approved design and these Specifications is measured by the linear foot (meter) complete in place. The liner is measured between the ends of the liner along the invert.

555.4.01 Limits

Portals are not measured for separate payment.

555.5 Payment

This Work, measured as specified above, will be paid for at the Contract Unit Price bid per linear foot (meter) of liner for each diameter and plate thickness. The specified thickness is used for either a two-flange plate or a four-flange plate.

This payment will be full compensation for:

- Furnishing materials, labor, tools, and equipment
- Removing and satisfactorily disposing of all excavated materials
- Force grouting
- Providing tunnel portals, where required
- Restoring and cleaning, including regrassing, as required
- Installing liner

Payment will be made under:

Item No. 555	Tunnel liner ___ diameter, ___ plate thickness (2 flange), or ___ plate thickness (4 flange)	Per linear foot (meter)

555.5.01 Adjustments

General Provisions 101 through 150.

Section 560—Structural Plate Pipe, Pipe-Arch and Arch Culverts

560.1 General Description

This work includes furnishing and installing structural plate pipe, pipe-arch, and arch culverts. Use the type of structural plate structure shown on the Plans.

Install structures according to the Specifications and to Plan details, or as directed by the Engineer.

560.1.01 Definitions

General Provisions 101 through 150.

560.1.02 Related References

A. Standard Specifications

Section 205—Roadway Excavation

Section 207—Excavation and Backfill for Minor Structures

Section 208—Embankments

Section 645—Repair of Galvanized Coatings

Section 840—Corrugated Aluminum Alloy Pipe

Section 844—Steel Pipe

B. Referenced Documents

General Provisions 101 through 150.

560.1.03 Submittals

General Provisions 101 through 150.

560.2 Materials

Ensure that materials meet the requirements of the following Specifications:

Material	Section
Backfill Materials	207
Steel Structural Plate for Pipe, Pipe-Arches, and Arches	844.2.03
Corrugated Aluminum Alloy Structural Plate Pipe, Pipe-Arches and Arches	840.2.04

560.2.01 Delivery, Storage, and Handling

General Provisions 101 through 150.

560.3 Construction Requirements

560.3.01 Personnel

General Provisions 101 through 150.

560.3.02 Equipment

General Provisions 101 through 150.

560.3.03 Preparation

Prepare structure excavation and foundation according to Section 207.

Before installing structural plate pipe, pipe-arch, or arch culverts, shape their foundation material as shown on the Plans.

560.3.04 Fabrication

General Provisions 101 through 150.

560.3.05 Construction

A. Drainage

Provide necessary temporary drainage.

Immediately remove debris or silt that constricts the flow through a structural plate pipe, pipe-arch, or arch culvert to maintain drainage throughout the life of the Contract.

B. Protection and Repair

Before allowing traffic over a culvert, provide compacted backfill of a depth and width to protect the structure. Repair and correct damage or displacement from traffic, erosion, or negligence at no additional cost to the Department.

C. Installation

Erect structural plate pipe-arches and arches in the sequence recommended by the manufacturer.

1. Bolts

   Tighten the bolts only after erecting the whole structure. Set bolts using drift pins or bars to line up the holes. Tighten bolts with torque wrenches to at least 150 ft·lbs (200 N·m), but not more than 200 ft·lbs (270 N·m) of torque.

2. Repair

   If there are damaged spots in the galvanized coating of the pipe, pipe-arch, or culvert where the base metal is exposed, repair according to Section 645.

   If there are damaged spots in the bituminous coating of the pipe, pipe-arch, or arch culvert where the base metal is exposed, repair by recoating with asphalt before backfilling the structure.

3. Elongation

Elongate structural plate pipe as shown on the Plans. Have the vertical axis of the pipe elongated in the shop. Ensure that when erection is complete, the elongated axis is in a vertical position.

560.3.06 Quality Acceptance

Clean all structures before final acceptance of the Work.

560.3.07 Contractor Warranty and Maintenance

General Provisions 101 through 150.

560.4 Measurement

A. Excavation and Backfill

Backfill materials Types II and III are measured according to Subsection 207.4, "Measurement."

B. Circular Pipe (All Types)

The overall length of circular pipe in place and accepted is measured in linear feet (meters) along the central axis of the pipe diameter.

C. Pipe-Arches

The overall length of pipe-arch in place and accepted is measured in linear feet (meters) along the bottom center line of the pipe-arch.

D. Multiple Installations

In multiple installations, each single line of culvert structure is measured separately.

E. Arch Culverts

Arch culverts of the dimensions and materials shown on the Plans, complete in place, are measured as a unit that includes necessary foundations, walls, and wings.

560.4.01 Limits

Excavation and normal backfill are not measured for payment.

560.5 Payment

A. Backfill

Backfill will be paid for according to Section 207.

B. Structural Plate Pipe, Pipe-Arch, and Arch Culvert

Structural plate pipe and pipe-arch installations, complete in place and accepted, will be paid for at the Contract Price per linear foot(meter). Arch culvert installations, complete in place and accepted, will be paid for per Lump Sum. This payment will be full compensation for the Item, including:

- Excavating
- Furnishing and hauling materials
- Installing
- Cutting pipe where necessary
- Repairing or replacing damaged sections
- Making connections, strutting and elongating
- Providing temporary drainage

- Joining an extension to an existing structure, where required

Payment will also be full compensation for removing, disposing, or using excavated materials as directed by the Engineer.

Payment will be made under:

Item No. 560	Structural plate pipe ___ in (mm) H= ___	Per linear foot (meter)
Item No. 560	Structural plate pipe-arch (span) in (mm), (rise) in (mm)	Per linear foot (meter)
Item No. 560	Structural plate arch culvert, structure no.___	Per lump sum

560.5.01 Adjustments

Excavation will not be paid for separately, but all of the other provisions of Section 205 and Section 208 shall govern.

Section 561—Renovating Existing Pipe

561.1 General Description

This work includes furnishing and inserting helically corrugated metal pipe, smooth-lined corrugated polyethylene pipe, high density polyethylene profile wall pipe, and high density polyethylene solid wall pipe or a polyvinyl chloride pipe inside an existing metal pipe and pressure grouting the space between the two pipes.

561.1.01 Definitions

General Provisions 101 through 150.

561.1.02 Related References

A. Standard Specifications

Section 801—Fine Aggregate

Section 830—Portland Cement

Section 831—Admixtures

Section 844—Steel Pipe

Section 845—Smooth Lined Corrugated Polyethylene (PE) Culvert Pipe

Section 880—Water

Section 882—Lime

Section 883—Mineral Filler

B. Referenced Documents

GDT 84

561.1.03 Submittals

General Provisions 101 through 150.

561.2 Materials

Ensure that materials meet the requirements of the following Specifications:

Material	Section
Corrugated Steel Pipe (Helically Corrugated)	844.2.01*
Smooth-Lined Corrugated Polyethylene (PE) Culvert Pipe	845
Portland Cement, Types I or II	830
Mineral Filler (Limestone Dust)	883
Fly Ash, Type A	831
Water	880
Fine Aggregate, Size No. 20	801.2.02
Agricultural Lime	882.2.02**
*Use Georgia Standard 1030D to determine the metal thickness of the insert pipe.	
**For this Work, use agricultural lime that has 90 percent minimum passing the No. 30 (600 µm) sieve and 30 percent minimum passing the No. 200 (75 µm) sieve.	

A. High Density Polyethylene (HDPE) Profile Wall Pipe

Use pipe liner that consists of a HDPE profile wall pipe that conforms to the requirements of ASTM F 894. Polyethylene material shall have polyethylene pipe liners material designation of PE 3408 and shall have a material cell classification per ASTM D 3350 of 334433C or higher.

Join HDPE profile wall pipe liner by thermal fusion (extrusion welding) per manufacturer specifications, or provide a positive mechanical joint that meets the requirements of ASTM D 3212. The joint shall be able to be pulled or pushed into the host pipe without joint separation.

B. High Density Polyethylene (HDPE) Solid Wall Pipe

Pipe liner shall consist of a HDPE solid wall pipe that conforms to the requirements of ASTM F 714 with an SDR of 32.5. Polyethylene material shall have polyethylene pipe liners material designation of PE 3408 and shall have a material cell classification per ASTM D 3350 of 345464C.

Join HDPE solid wall pipe liner by butt fusion per ASTM F 2620 and the manufacturer specifications, or provide a positive mechanical joint that meets the requirements of ASTM D 3212. The joint shall be able to be pulled or pushed into the host pipe without joint separation.

C. Polyvinyl Chloride (PVC) Pipe

Pipe liner shall consist of PVC corrugated pipe with a smooth interior that conforms to the requirements of ASTM F 949. PVC pipe shall have a minimum pipe stiffness of 46 psi (317 kPa) when tested according to ASTM D 2412. Use pipe made of PVC compound with a cell classification per ASTM D 1784 of 1245B.

Join the PVC pipe liner with a PVC coupling that uses elastomeric sealing gaskets. The assembled joint shall meet the performance requirements of ASTM D 3212. The joint shall be able to be pulled or pushed into the host pipe without joint separation. Ensure that elastomeric seals meet the requirements of ASTM F 477.

D. Grout Mixtures

Mix water with the dry ingredients to produce a grout with an efflux time from the flow cone of at least 16 seconds and no more than 22 seconds when tested according toGDT 84.

Add cement, cement and limestone dust, or cement and fine aggregate to the batch proportions to produce the required consistency.

Table of Grout Mixtures					
Mix Proportions, Percent by Weight of Dry Materials					
Dry Materials	Grout Types				
	1	2	3	4	5
Cement	25	25	25	25	100
Limestone dust		25	75	50	
Fly ash	25			25	
Fine aggregate	50	50			

561.2.01 Delivery, Storage, and Handling

General Provisions 101 through 150.

561.3 Construction Requirements

561.3.01 Personnel

General Provisions 101 through 150.

561.3.02 Equipment

A. Batching

Use weight hoppers and scales for each dry material or calibrated volumetric batch hopper. Calibrate volumetric batch hoppers in increments equivalent to one 94 lb (42.6 kg) bag of cement.

B. Mixing

Use a watertight batch-type mixer capable of blending the various materials into a homogenous mixture.

C. Grout Pumping

Use a positive-displacement, piston-type pump or a screw-type worm pump equipped with the following:

- Discharge line with a positive cut-off valve at the nozzle end and a by-pass return line to recirculate the grout back into a holding tank or mixer
- A nozzle or device at the end of the discharge line that will remain secure in the 1 in (25 mm) grout pipe and free of leaks

D. Pulling

Provide equipment capable of pulling the new helically corrugated metal pipe.

561.3.03 Preparation

General Provisions 101 through 150.

561.3.04 Fabrication

General Provisions 101 through 150.

561.3.05 Construction

A. Grout Mixtures

Use the Table of Grout Mixtures in Subsection 561.2.D, “Grout Mixtures.”

B. Installation

Install pipe liner according to the manufacturer's guidelines and as specified in the plans, with the following requirements:

1. Clean and inspect the existing pipe before pulling or pushing the new pipe through.
2. Use a nose cone on all on all pipe liners. The nose cone shall have enough strength to withstand pulling or pushing of the new pipe liner. Weld or bolt the nose cone to the end of the liner. Use a nose cone that includes a ring for attaching the pulling cable.
3. After pulling or pushing the new pipe through the old one, plug the space between the pipes at both ends with concrete or mortar. Insert a 1 in (25 mm) grout pipe with threaded ends on the outside into the tops of the plugs at both ends of the pipes, and screw on a threaded cap.
4. After the pipe plugs have been in place long enough to develop strength to withstand pressure grouting, remove the grout pipe caps. Connect the grout pump to the downstream grout pipe and pump grout into the void until it flows freely from the upstream grout pipe.
5. After pumping is complete, replace the grout pipe caps.

561.3.06 Quality Acceptance

General Provisions 101 through 150.

561.3.07 Contractor Warranty and Maintenance

General Provisions 101 through 150.

561.4 Measurement

Renovating existing pipe is measured by the linear foot (meter) of the specified diameter of new pipe installed.

561.4.01 Limits

General Provisions 101 through 150.

561.5 Payment

Renovating existing pipe will be paid for at the Contract Unit Price bid per each diameter and metal thickness of new pipe. This payment will be full compensation for completing all work described in this Section, including cleaning and restoring damaged areas.

Payment will be made under:

Item No. 561	Renovating existing pipe____ in (mm) diameter	Per linear foot (meter)

561.5.01 Adjustments

General Provisions 101 through 150.

Section 570—Minor Drainage Structures for Detours

570.1 General Description

This work includes selecting, constructing, and maintaining minor structures used on detours for cross drains or side drains. Remove these structures when the detour is no longer needed.

This Item covers only the use of minor structures. When the Plans call for constructing, maintaining, and removing a detour bridge, apply Section 541.

570.1.01 Definitions

General Provisions 101 through 150.

570.1.02 Related References

A. Standard Specifications

Section 541—Detour Bridges

B. Referenced Documents

AASHTO HS-15

570.1.03 Submittals

If using a bridge-type structure instead of one or more pipes, present plans of the proposed structure to the Engineer for approval before beginning construction.

570.2 Materials

All selected materials are subject to the following requirements:

A. Bridge-Type Structure

Ensure that each bridge-type structure roadway width is at least 2 ft (600 mm) greater than the approach pavement width or 24 ft (7.2 m), whichever is greater. Ensure that load capacity is equivalent to AASHTO HS-15. Provide suitable hub guards and handrails.

B. Pipe Culvert

Use pipe culverts long enough to accommodate the detour grade and cross section shown on the Plans.

570.2.01 Delivery, Storage, and Handling

General Provisions 101 through 150.

570.3 Construction Requirements

570.3.01 Personnel

General Provisions 101 through 150.

570.3.02 Equipment

General Provisions 101 through 150.

570.3.03 Preparation

General Provisions 101 through 150.

570.3.04 Fabrication

General Provisions 101 through 150.

570.3.05 Construction

Have the Engineer approve selected construction methods.

Use structures that have adequate openings and are suitable for the purpose intended. Unless otherwise modified by a special provision, provide for an uninterrupted flow of traffic over the existing highway or the completed detour, as the case may be. Assume all risks involved in the design, construction, maintenance, and removal of each structure, including any damage from any cause.

570.3.06 Quality Acceptance

General Provisions 101 through 150.

570.3.07 Contractor Warranty and Maintenance

General Provisions 101 through 150.

570.4 Measurement

The entire structure at the location specified is measured for payment. Multiple lines of pipe used instead of a bridge-type structure or a single larger diameter pipe is considered one structure.

570.4.01 Limits

General Provisions 101 through 150.

570.5 Payment

This Item will be paid for at the Lump Sum price bid for each structure. This price includes the materials, labor, equipment, and small tools necessary to construct, maintain, and remove the structure and to dispose of the materials. Upon removal, materials become the property of the Contractor.

Sixty percent of the Lump Sum price will be paid when the structure is complete in place. The remaining 40 percent will be paid when the maintenance period is complete, the structure removed, and the materials disposed of.

Payment will be made under:

Item No. 570	Construct, maintain, and remove detour drainage structure no.___	Per lump sum

570.5.01 Adjustments

General Provisions 101 through 150.

Section 573—Underdrains

573.1 General Description

This work includes constructing underdrains with perforated pipe according to the Specifications and the details, lines, and grades shown on the Plans or as directed by the Engineer.

573.1.01 Definitions

General Provisions 101 through 150.

573.1.02 Related References

A. Standard Specifications

Section 806—Aggregate for Drainage

Section 839—Corrugated Polyethylene Underdrain Pipe

Section 840—Corrugated Aluminum Alloy Pipe

Section 844—Steel Pipe

B. Referenced Documents

General Provisions 101 through 150.

573.1.03 Submittals

General Provisions 101 through 150.

573.2 Materials

Ensure that materials meet the requirements of the Specifications below.

Use any pipe specified below unless the Plans state otherwise. Use only one type of pipe in each continuous, interconnecting line.

Material	Specification
Aggregate for Underdrain	806.2.01
Corrugated Aluminum Alloy Underdrain Pipe	840.2.01
Corrugated Steel Underdrain Pipe	844.2.04
Corrugated Polyethylene Underdrain Pipe	839

573.2.01 Delivery, Storage, and Handling

General Provisions 101 through 150.

573.3 Construction Requirements

573.3.01 Personnel

General Provisions 101 through 150.

573.3.02 Equipment

General Provisions 101 through 150.

573.3.03 Preparation

General Provisions 101 through 150.

573.3.04 Fabrication

General Provisions 101 through 150.

573.3.05 Construction

Schedule the work so that underdrain installations coincide with other operations on the Project to prevent conflict, damage, or infiltration of materials.

A. Excavation

To intercept water-bearing strata, excavate according to the details and elevation shown on the Plans, or to an increased depth if the Engineer directs.

When the material in the bottom of the trench is unstable, remove unstable material, add approved granular material, and compact to provide a stable foundation for the pipe.

B. Laying Pipe

Lay pipe according to Plan details with the perforations on the underside of the pipe, unless otherwise directed by the Engineer.

1. Lay bell and spigot and tongue and groove pipe with the bell or grooved end upstream and the bells embedded in the foundation material.
2. Firmly connect the joints.
3. Connect pipe and butt joints securely, using the appropriate size and type of band or coupling.
4. Install the following miscellaneous items as indicated on the Plans or otherwise specified:
   - Pipe screens
   - Caps

- Plugs
- Ells
- Wyes
- Tees
- Markers

C. Backfilling

After laying the pipe, place drainage aggregate in 6 in (150 mm) layers. Compact each layer thoroughly until reaching the total Plan depth. Do not disturb pipe alignment.

D. Marking

Mark each outlet end of the drainage system according to Plan details.

E. Protecting from Contamination

Protect the filter material from contamination by foreign matter.

1. Particular attention must be given to the top surface of the filter blanket when it will be covered by an aggregate drainage course. Soil infiltration from placing soil courses over the filter material is incidental to the Work and is not considered contamination.
2. If aggregates become contaminated, remove the contaminated portion and replace it with clean filter material before placing succeeding layers of filter blanket or placing aggregate drainage course.

573.3.06 Quality Acceptance

General Provisions 101 through 150.

573.3.07 Contractor Warranty and Maintenance

General Provisions 101 through 150.

573.4 Measurement

The quantity of underdrain pipe with or without drainage aggregate, complete in place and accepted, is measured in linear feet (meters) along each line or lateral, from center to center of junctions and fittings.

573.4.01 Limits

When the trench is required to be undercut, the depth measurement for determining the underdrain pipe payment will be from the bottom of the required undercut to the final elevation established for the top of the trench.

573.5 Payment

Each size of underdrain pipe will be paid for at the Contract Price per linear foot (meter) as follows:

A. Underdrain Pipe Only

Payment for pipe under this Item will include:

- Ground preparation
- Excavation
- Backfilling
- Disposal of surplus material
- All appurtenances required to complete the Item including screens, tees, wyes, ells, and markers

B. Underdrain Pipe Including Drainage Aggregate

Payment for pipe under this Item will include specified drainage aggregate and all items listed under Subsection 573.5.A above.

Underdrain pipe including drainage aggregate to depths greater than 6 ft (1.8 m) below the final elevation established for the top of the trench will have an adjusted Unit Price. This price will be computed by increasing the Contract Unit Price by a percentage based on the extra depth as follows:

From over 6 ft (1.8 m) to and including 8 ft (2.4 m)	At contract price plus 20 percent
Over 8 ft (2.4 m) deep	By supplemental agreement or force account

C. Contaminated Aggregate

Removal and replacement of contaminated aggregate will not be paid for separately, but will be included in the Bid Price for underdrain pipe.

Payment will be made under:

Item No. 573	Underdrain pipe only ___ in (mm)	Per linear foot (meter)
Item No. 573	Underdrain pipe including drainage aggregate___ in (mm)	Per linear foot (meter)

573.5.01 Adjustments

General Provisions 101 through 150.

Section 574—Edgedrains

574.1 General Description

This work includes constructing edgedrains with perforated pipe according to the Specifications and to the details, lines, and grades shown in the Plans, or as directed by the Engineer.

574.1.01 Definitions

General Provisions 101 through 150.

574.1.02 Related References

A. Standard Specifications

Section 400—Hot Mix Asphaltic Concrete Construction

Section 800—Coarse Aggregate

Section 839—Corrugated Polyethylene Underdrain Pipe

Section 840—Corrugated Aluminum Alloy Pipe

Section 843—Concrete Pipe

Section 881—Fabrics

B. Referenced Documents

GDT 59

QPL 28

574.1.03 Submittals

General Provisions 101 through 150.

574.2 Materials

Ensure that materials meet the requirements of the following Specifications.

Use pipe specified below unless the Plans state otherwise. Use only one type of pipe in each continuous, interconnecting line.

Material	Section
Corrugated Aluminum Alloy Underdrain Pipe	840.2.02
Concrete Underdrain Pipe	843.2.03
Corrugated Polyethylene Underdrain Pipe	839
Drainage Aggregate Backfill, Size No. 78	800.2.01
Asphaltic Concrete	400
Plastic Filter Fabric (Non-woven)	881.2.05

574.2.01 Delivery, Storage, and Handling

General Provisions 101 through 150.

574.3 Construction Requirements

574.3.01 Personnel

General Provisions 101 through 150.

574.3.02 Equipment

General Provisions 101 through 150.

574.3.03 Preparation

Before placing edgedrains, pressure grout and cure pavement slabs in the immediate area. Do not begin work until the Engineer determines that pavement slabs are stable.

574.3.04 Fabrication

General Provisions 101 through 150.

574.3.05 Construction

Complete any opened trenches, including the asphalt cap, each working day. Install edgedrains with other operations on the Project to prevent conflict, damage, or improper infiltration of other materials.

A. Excavating

Excavate according to the details and elevations shown on the Plans or as directed by the Engineer.

B. Placing Filter Fabric

Place filter fabric according to Plan details.

If the drainage aggregate or the filter fabric become contaminated or the filter fabric is damaged during the backfilling operation, remove the contaminated or damaged materials and replace them at no additional cost to the Department.

C. Laying Pipe

Lay pipe according to the Plan details, with perforations on the underside of the pipe, unless otherwise directed by the Engineer.

1. Lay bell and spigot and tongue and groove pipe with the bell or grooved end upstream and the bells embedded in the foundation material.
2. Firmly connect the joints.

3. Connect butt joint pipes securely using the appropriate size and type of band or coupling.
4. Install the following miscellaneous Items according to the Plans or as otherwise specified:
   - Pipe screens
   - Caps
   - Plugs
   - Covers
   - Ells
   - Wyes
   - Tees
   - Markers

D. Backfilling

After laying the pipe, place the additional backfill material in 6 in (150 mm) layers.

1. Before compacting, establish the target density as 1.18 times the average of 5 dry-density determinations made on the material in the trench. Space the 5 determinations over at least 500 ft (150 m), and determine them using the 6-in (150 mm) direct transmission density mode according to GDT 59.
2. Thoroughly compact each layer to 100 percent of the target density and complete to the depth shown on the Plans, details, or as directed by the Engineer.
3. Do not disturb the pipe alignment or damage the filter fabric.
4. Place a compacted asphaltic concrete cap on the trench as shown in the Plan details or as directed by the Engineer.

E. Marking

Mark each outlet end of the drainage system according to Plan details.

F. Protecting from Contamination

Protect the backfill material from contamination by foreign matter.

If aggregates become contaminated, remove the contaminated portion and replace it with clean material before placing succeeding layers.

574.3.06 Quality Acceptance

General Provisions 101 through 150.

574.3.07 Contractor Warranty and Maintenance

General Provisions 101 through 150.

574.4 Measurement

The quantity of edgedrain pipe, including backfill material and filter fabric, complete in place and accepted is measured in linear feet (meters) along each line or lateral, from center to center of junctions and fittings.

574.4.01 Limits

General Provisions 101 through 150.

574.5 Payment

Each size of edgedrain pipe will be paid for at the Contract Price per linear foot (meter).

Payment for pipe under this Item includes:

- Preparation

- Excavation
- Backfilling
- Specified backfill materials and filter fabric
- Disposal of surplus material
- Screens, tees, wyes, and ells
- The asphaltic concrete cap over the trench

Payment will be made under:

Item No. 574	Edgedrain pipe, including backfill material and filter fabric ___ in (mm)	Per linear foot (meter)

574.5.01 Adjustments

General Provisions 101 through 150.

Section 576—Slope Drain Pipe

576.1 General Description

This work includes furnishing and installing slope drains made of corrugated steel pipe, corrugated aluminum pipe, or corrugated smooth-lined polyethylene pipe where shown on the Plans.

576.1.01 Definitions

General Provisions 101 through 150.

576.1.02 Related References

A. Standard Specifications

Section 840—Corrugated Aluminum Alloy Pipe

Section 844—Steel Pipe

Section 845—Smooth Lined Corrugated Polyethylene (PE) Culvert Pipe

B. Referenced Documents

General Provisions 101 through 150.

576.1.03 Submittals

General Provisions 101 through 150.

576.2 Materials

Ensure that materials meet the requirements of the following Specifications:

Material	Specification
Corrugated Aluminum Alloy Slope Drain Pipe	840.2.02
Corrugated Steel Culvert Pipe	844.2.01
Corrugated Smooth Lined PE Pipe	845.2.01

Ensure that the nominal thickness of the metal for slope drain pipe conforms to the minimum thickness or gauge specified in the design tables, unless otherwise shown on the Plans.

576.2.01 Delivery, Storage, and Handling

General Provisions 101 through 150.

576.3 Construction Requirements

576.3.01 Personnel

General Provisions 101 through 150.

576.3.02 Equipment

General Provisions 101 through 150.

576.3.03 Preparation

Before placing the pipe, compact the foundation until firm and stable.

576.3.04 Fabrication

General Provisions 101 through 150.

576.3.05 Construction

Place slope drain pipe in an open trench, excavated to the line and grade shown on the Plans or as directed.

Lay pipe sections that have circumferential joints with the outside laps of the circumferential joints uphill.

After installing the pipe:

1. Immediately backfill the trench with excavated materials or other approved material.
2. Place backfill in layers 8 in (200 mm) thick or less.
3. Compact each layer until firm and stable.

576.3.06 Quality Acceptance

General Provisions 101 through 150.

576.3.07 Contractor Warranty and Maintenance

General Provisions 101 through 150.

576.4 Measurement

Slope drain pipe is measured by the actual number of linear feet (meters) of the size installed and accepted.

576.4.01 Limits

General Provisions 101 through 150.

576.5 Payment

Accepted slope drain will be paid for at the Contract Price per linear foot (meter) for the size specified. This price includes full compensation for labor and incidentals necessary to complete the Item.

Payment will be made under:

Item No. 576	Slope drain pipe ___ in (mm)	Per linear foot (meter)

576.5.01 Adjustments

General Provisions 101 through 150.

Section 577—Metal Drain Inlets

577.1 General Description

This work includes installing metal drain inlets according to the Specifications and Plan details.

On Projects where the grading and paving are let simultaneously, the Item will be designated as “Metal Drain Inlets—Complete Assembly.” For this type of construction, complete the Work in two stages. Perform Stage 1 Construction immediately after completing an embankment. Perform Stage 2 Construction progressively as the paved shoulders are completed.

On grading Projects where no paving is involved, limit the installations to Stage 1 Construction.

On paving Projects where the grading has been completed and metal drain inlets are in place under Stage 1 Construction, complete each assembly as specified under Stage 2 Construction.

577.1.01 Definitions

General Provisions 101 through 150.

577.1.02 Related References

A. Standard Specifications

Section 400—Hot Mix Asphalt Concrete Construction

Section 436—Asphaltic Concrete Curb

Section 441—Miscellaneous Concrete

Section 576—Slope Drain Pipe

Section 603—Rip Rap

Section 645—Repair of Galvanized Coatings

Section 844—Steel Pipe

B. Referenced Documents

General Provisions 101 through 150.

577.1.03 Submittals

General Provisions 101 through 150.

577.2 Materials

Ensure that materials meet the requirements of the following Specifications:

Material	Specification
Concrete Aprons	441
Sand-Cement Bag Rip Rap	603
Slope Drain Pipe	576
Asphaltic Concrete Curb	436
Metal Sheeting and Spelter Coating	844.2.03

For asphaltic concrete spillways, use the mixture for asphaltic concrete curb.

577.2.01 Delivery, Storage, and Handling

General Provisions 101 through 150.

577.3 Construction Requirements

577.3.01 Personnel

General Provisions 101 through 150.

577.3.02 Equipment

General Provisions 101 through 150.

577.3.03 Preparation

General Provisions 101 through 150.

577.3.04 Fabrication

Fabricate metal inlets as integral units to the shape and dimensions shown on the Plans. The end section and reducer shall not be corrugated or perforated.

577.3.05 Construction

Install metal inlet drainage assemblies at locations shown on the Plans or where directed by the Engineer. Locate inlets to avoid future installations such as guard rail posts and lighting standards.

A. Repair

Repair damaged galvanized coating according to Section 645.

B. Stage Construction

On combination grading and paving Projects, install metal drain inlet assemblies in two construction stages as follows:

1. Stage 1 Construction

   As soon as the initial grading of an embankment is completed:

   a. Install metal drain inlets where shown on the Plans or as directed by the Engineer. Each installation includes:
      - Metal inlet
      - Necessary slope drain pipe
      - Concrete aprons or rip rap as required by the Engineer, to control erosion at the outlet end

   b. To direct the water to the inlets, crown the roadbed and construct a roll of embankment material at the shoulder line. Protect and maintain this drainage system to prevent leakage, erosion, and scouring. Keep gutters, pipes, and inlets open.

2. Stage 2 Construction

   Complete this second stage operation immediately after paving shoulders to provide a complete drainage installation and prevent erosion of the embankment slopes.

   As soon as a section of paved shoulder is completed:

   a. Remove each adjacent inlet from its position placed under Stage 1 Construction and place it in its final position as shown on the Plans.

   b. Field cut a section of slope drain pipe to the required length to connect the existing slope drain pipe to the metal inlet in its new position.

   c. Thoroughly compact the embankment material around the inlet, including the subgrade under the asphaltic concrete spillway. Finish to a smooth, firm surface.

d. Place the asphaltic concrete mixture for the spillway on the prepared subgrade within the temperature limits set by the Engineer. Thoroughly compact by rolling. Use a hand-operated roller weighing 300 lbs (135 kg) or more or a small power roller satisfactory to the Engineer.

   When areas cannot be reached with rollers, compact them with vibratory tampers or hand tampers approved by the Engineer.

e. After compaction, ensure that the surface and texture is smooth, even, and dense. Shape and complete the shoulders and slopes to conform to the required finished section.

f. As soon as each drainage assembly is completed, place the asphaltic curb at the edge of the paved shoulder and connect it to the inlet as shown on the Plans.

3. Metal Drain Inlet

   Complete assembly construction of each metal drain inlet shall include both Stage 1 Construction and the Stage 2 Construction specified above.

577.3.06 Quality Acceptance

General Provisions 101 through 150.

577.3.07 Contractor Warranty and Maintenance

General Provisions 101 through 150.

577.4 Measurement

Each of the three different types of metal drain inlet installations is measured separately for payment, complete in place and accepted. In each instance, the 2 ft (600 mm) section of corrugated pipe (which is an integral part of each Unit) is included in the measurement.

Measurement of each Metal Drain Inlet—Complete Assembly and each Metal Drain Inlet—Stage 2 Construction includes the asphaltic concrete spillway and the portion of asphaltic concrete curb included, within the limits of each inlet assembly, as shown on the Plans.

Measurement of each Metal Drain Inlet—Stage 1 Construction includes the integral drain unit and rip rap, earth roll, or other incidental construction necessary to direct water into the Inlet.

Other items of construction required in the work and eligible for payment such as slope drain pipe, asphaltic concrete curb, rip rap, and concrete aprons are measured for payment according to the applicable Specification for such items.

577.4.01 Limits

General Provisions 101 through 150.

577.5 Payment

Each of the three types of metal drain inlet installation, measured for payment as described above, will be paid for at the Contract Unit Price per each.

Payment of each Metal Drain Inlet—Complete Assembly will include both the First Stage and Second Stage Construction outlined above.

When First Stage Construction is completed and the installation is satisfactory to the Engineer, 50 percent of the bid price for each such Unit will be included for payment on the next statement.

When the Second Stage Construction is completed and the installation is satisfactory to the Engineer, the remaining 50 percent of the Bid Price for each Unit will be included for payment on the next statement.

All other Items needed to complete the installation and that are eligible for payment will be paid for according to the applicable Specification for such items.

Payment will be made under:

Item No. 577	Metal drain inlet—complete assembly	Per each
Item No. 577	Metal drain inlet—stage 1 construction	Per each
Item No. 577	Metal drain Inlet—stage 2 construction	Per each

577.5.01 Adjustments

General Provisions 101 through 150.

Section 581—Pot Bearings

581.1 General Description

This work includes furnishing and installing pot bearings (fixed and expansion types). Use the quality, type, and size designated in this Specification, on the Plans, or ordered by the Engineer.

581.1.01 Definitions

General Provisions 101 through 150.

581.1.02 Related References

A. Standard Specifications

Section 501—Steel Structures

Section 506—Expanded Mortar

Section 535—Painting Structures

Section 851—Structural Steel

Section 852—Miscellaneous Steel Materials

Section 885—Elastomeric Bearing Pads

Section 886—Epoxy Resin Adhesives

Section 887—Bearing Plates with Polytetrafluroethylene Surfaces

B. Referenced Documents

ASTM A 709 Grade 36 (ASTM A 709M Grade 250)

A 709 Grade 50 (A 709M Grade 345)

581.1.03 Submittals

Provide the following reports to the Project Engineer and the Office of Materials:

- Certified test reports
- Materials certificates
- Certificate of Compliance to conform with the requirements in this Specification
- Shop drawings
- Certification

A. Shop Drawings

Before fabricating the bearings, submit to the Engineer Shop Drawings according to Subsection 501.1.03.B, “Shop Drawings.” Include the following on the drawings:

- Bearing plan and elevation
- Complete details and sections that show the materials incorporated into the bearing
- ASTM or other material designations
- Vertical and horizontal load capacity
- Rotation and translation capacity
- Compression stress on sliding surfaces and elastomeric surfaces at maximum and minimum design loads
- Complete design calculations
- Complete erection and installation procedure

B. Certification

Have the pot bearing manufacturer furnish the following to the Project Engineer and the Office of Materials:

- Certified test reports
- Material certificates
- Certificate of compliance to conform with these Specifications for each bearing furnished

581.2 Materials

Ensure that materials meet the requirements of the following Specifications:

Material	Section
Painting	535
Structural Steel	851
Anchor Bolts, Nuts, and Washers	852.2.02
Elastomeric Bearing Pads	885
Epoxy Resin Adhesives	886
Bearing Plates with PTFE Surfaces	887

A. Metals

Use the stainless steel sliding surfaces indicated below:

- Stainless Clad Steel Plate: Minimum eight percent stainless steel conforming to the requirements of ASTM A 264 (both Shear Strength and Bond Strength tests in 8.13 and 8.14 of ASTM A 264 are required). Use stainless steel cladding that meets Type 304. Use backing steel (base metal) that meets ASTM Designation A 709 Grade 50W(A 709M, Grade 345 W).
- Stainless Steel Plate Welded To A Steel Backup Plate: Use at least 16 gage (1.6 mm) thickness of the stainless steel plate that meets ASTM 240 Type 304. Use steel backing plate that meets ASTM Designation A 709 Grade 50W (A 709M Grade 345W) unless otherwise indicated on the Plans. Use qualified welders to weld the stainless steel plate to the steel backing. Furnish welding procedures and welder qualification documents to the Department for review and approval prior to fabrication. Weld entirely around the perimeter of the stainless steel plate.
- Solid Stainless Steel Plate: Mill-finish the stainless steel sliding surfaces to a maximum surface roughness of 20 micro-inches (0.50μm), RMS, according to the requirements of ANSI Standard B 46.1. Remove and replace, at no additional cost to the Department, bearing plates whose stainless steel sliding surfaces have been scratched or damaged.

B. Structural Steel

Use structural steel for the masonry plates and the components of the bearings that meet the requirements of these ASTM Specifications:

- ASTM A 709, Grade 36 (ASTM A 709M, Grade 250)
- A 709, Grade 50 (A 709M, Grade 345)

Machine the base pot from a solid steel plate.

C. Anchor Bolts

Use anchor bolts, including nuts and washers, that meet the requirements of Subsection 852.2.02.

D. Elastomeric Material

Ensure that the elastomeric material used as the confined medium within the pot is 100 percent virgin chloroprene ("Neoprene") that meets the requirements of Section 885. Ensure that the elastomer is a minimum Grade 2 and has a durometer hardness of 50 ± 5.

Ensure that the sealing rings for containing the elastomer in the pot bearings are as specified by the pot bearing manufacturer, and meet the following requirements:

- Made of brass or stainless steel
- Withstands and transmits all imposed loading
- Allows free movement of the piston
- Contains the elastomer within the pot under the maximum static and dynamic loading
- Prevents contamination of the elastomer with foreign matter

E. Expanded Mortar

Set anchor bolts in preformed or drilled holes using expanding mortar that meets the requirements of Section 506.

F. Paint

Paint exposed steel of each bearing assembly other than stainless steel according to System VI of Section 535. Take care to keep Polytetrafluroethylene (PTFE) or sliding surfaces free of paint.

G. Design and Applicable Codes

Design, fabricate, and erect pot bearings according to these Specifications and the applicable requirements of the following Standard Codes and Specifications.

- Section 501, including supplements
- Current AASHTO Standard Specifications for Highway Bridges

Additional design parameters with which the pot bearing manufacturer must comply:

1. Bearing on Concrete: Maximum bearing pressure is as indicated in AASHTO.
2. Elastomeric Disc: Design compressive strength is 3,500 psi (25 MPa).
3. Sliding Surfaces: Accommodate translation by sliding of a hard mating surface of stainless steel across a PTFE surface.
    a. Stainless Steel Sliding Surface: Accurate, flat surface with Brinnell hardness of 125 minimum.
        1) Stainless steel sliding surface to completely cover PTFE surface in all operating positions of the bearing.
        2) Position the stainless steel sliding surface so that the sliding movement causes the dirt and dust accumulation to fall from the surface of the stainless steel.
    b. PTFE Sliding Surface: Do not use holes of slots in the PTFE sliding surface.
    c. Static Coefficient of Friction: Under a load of 3,500 psi (25 MPa), do not exceed 4 percent for unfilled PTFE nor 8 percent of filled PTFE surfaces.
    d. Rotation: 0.015 radians.

e. Piston-Cylinder Clearance: Limit clearance to 0.30 in (0.76 mm). Use a brass or stainless steel sealing ring to prevent extrusion of the elastomeric material.

H. Substituted Bearings

Pot bearings with a design similar to that shown on the Plans may be used provided the bearings to be substituted are approved by the State Bridge Engineer and comply with the following:.

1. Equal or better load carrying and moment capacity.
2. All control dimensions are maintained and bearings fit within the limits of detailed masonry plate.
3. Use filled or unfilled (recessed) PTFE.
4. Piston-cylinder clearance is limited to 0.030 in. (0.76 mm) and a brass or stainless steel sealing ring shall be used to prevent extrusion of the elastomeric material.
5. Elastomeric material is used as a confined medium within the pot.
6. The elastomeric disc is lubricated by a means acceptable to the Engineer.
7. Do not use aluminum or aluminum alloy.
8. Equal or better than the pot bearings shown on the Plans in all structural respects and meets all design requirements.

581.2.01 Delivery, Storage, and Handling

A. Assembling and Marking

Have each pot bearing assembled at the plant, marked for identification, and delivered to the construction site as a complete unit.

Each bearing shall be marked with permanent match-marks to indicate the normal position of the bearing.

B. Transportation, Storage, and Handling During Construction

Follow these guidelines to transport, store, and handle pot bearings during construction:

1. Protect each pot bearing from dust and moisture.
2. Store the PTFE surface in the shade to avoid the damaging effects of ultraviolet rays.
3. Protect the pot bearings from damage during construction and prevent contamination of the various components of the pot bearings.

Ensure that the Fabricator also follows the above requirements.

During transportation and storage, cover the bearings with moisture-proof and dust-proof covers.

581.3 Construction Requirements

581.3.01 Personnel

A. Skilled Representative

Have the bearing manufacturer provide a skilled representative who is certified by the manufacturer to be experienced in similar installations.

The representative shall:

- Give aid and instruction during the pot bearing installation.
- Be present during the initial bearing installation.
- Be present during welding of the pots to the masonry plates, if not performed in the manufacturer's shop.
- Remain on the job until the bearing installation proceeds without trouble and until the workmen are experienced with the work for each installation as determined by the Engineer.

Arrange to have the manufacturer's skilled representative present whenever requested by the Engineer.

581.3.02 Equipment

General Provisions 101 through 150.

581.3.03 Preparation

General Provisions 101 through 150.

581.3.04 Fabrication

A. Polytetrafluroethylene (PTFE)

Ensure that the PTFE, including its connection to its backup material, conforms with the requirements of Section 887, except as modified in this Specification.

Have the PTFE sliding surface bonded under factory controlled conditions, or mechanically connect it to a rigid backup material that can resist bending stresses of the sliding surfaces.

As an alternate, PTFE material of twice the thickness specified above may be recessed for half its thickness in the backup material. Ensure that it is at least 1/8 in (3 mm) thick.

1. When shown on the Plans, weld the pot to the masonry plate before installing the elastomer.

   If welding procedures established and approved by the Engineer restrict the temperature of the bond area to no greater than 300 °F (150 °C), welding to steel plates with a bonded PTFE surface is permitted.

   Use temperature-indicating wax pencils or other suitable means to determine the temperature.
2. After fabricating the backup material, plane it before bonding the stainless steel or PTFE to a true plane surface.
3. Have the PTFE sheets bonded at the bearing manufacturer's factory under controlled conditions according to the approved adhesive system manufacturer's written instructions.
4. When epoxy bonding PTFE sheets, ensure that the side of the PTFE sheet to be bonded to the metal is factory treated by the sodium napthalene or sodium ammonia process.
5. After the bonding operation, ensure that the PTFE surface is smooth, flat, and bubble free. Polish the filled PTFE surfaces.
6. Positively locate the elements of the bearing in the bearing manufacturing and assembling.
7. If using bearing other than those detailed on the Plans, obtain approval before constructing the substructure upon which the bearings will be installed.
8. Have each bearing assembled at the manufacturer's plant, marked for identification, and delivered to the construction site as a complete unit.

   Ensure that the bearings have permanent match-marks to indicate the normal position of the bearing.

581.3.05 Construction

A. Erection

Place bearings at their proper locations before erecting the superstructure supported by the bearings.

1. Install Pier Tops

   Install pier tops horizontal at the correct elevation with a plus or minus tolerance of zero. Do not install the masonry plates until the Engineer accepts the pier tops.
2. Install the Anchor Bolts

   Cast anchor bolts in the concrete or set them in preformed holes, unless otherwise shown on the Plans. If setting them in preformed holes, fill the preformed holes in the concrete substructure with epoxy grout.

   a. Insert the anchor bolts to the prescribed depth.

   b. Place additional grout as required in the annular space around the anchor bolts until the grout is well packed and flush with the top surface of the concrete.

c. Wipe clean the exposed surfaces of the anchor bolts and substructure. Do not allow a load on grout that has not been in place at least 7 days.

3. Install Masonry Plates

   Set the masonry plates to the proper elevation on the previously finished concrete pads.

4. Install the Bearings
   a. Place the bearing at the predetermined locations when erecting the superstructure.
   b. Remove the temporary restraints as directed by the bearing manufacturer.
   c. Adjust the bearings as follows:
      - Adjust the expansion bearings from the normal position at 60 °F (15 °C) to allow for the ambient temperature during erection or casting.
      - Adjust the pot bearings to allow them to move when dead loads are applied. Ensure that the bearing is properly positioned and parallel (free from rotation) after applying the dead load.
      - Adjust the bearings horizontally on the masonry plate to properly fit the superstructure members being erected.
   d. After adjustments and approval by the Engineer, weld the bearings to the masonry plate.

581.3.06 Quality Acceptance

Instruct the manufacturer to furnish facilities to test and inspect the completed bearings in the plant or at an independent test facility. An approved testing laboratory or the manufacturer supervised by an approved independent expert shall perform the testing.

Follow these testing guidelines:

- Instruct the manufacturer to allow the Engineer and Inspectors access to the plant and test facilities.
- Furnish certified test reports, materials certificates, and a certificate of compliance to conform with the requirements in the Specifications.
- Perform testing according to Section 887 and this Specification. The Department reserves the right to sample and test the material and pot bearing assemblies as shown in Section 106.
- Test complete bearing assemblies or a specially manufactured pot bearing prototype that has a capacity of 400 kips (181 000 kg).

Successfully tested full-size bearings that meet the requirements of this subsection and have no damaged components, finishes, or surfaces may be used in construction. Provide prototype pot bearings, if used, at no additional expense to the Department.

Specific Items tested are as follows:

A. Coefficient of Friction

Perform tests to determine the static coefficient of friction of the first movement under a load of 3,500 psi (25 MPa) on a piston area applied continuously for 12 hours before testing. Determine under a load of 2,000 psi (14 MPa) on a piston area the following:

1. The static coefficient of friction value shall not exceed 10 percent for filled PTFE surfaces and 6 percent for unfilled PTFE surfaces.
2. The first movement static and dynamic coefficient of friction at a sliding speed of less than 1 in per min (0.4 mm per sec). Values shall not exceed 10 percent for filled PTFE surfaces and 6 percent for unfilled PTFE surfaces.
3. The static and dynamic coefficient of friction is determined after the bearing is subjected to 100 design movements at a speed of less than 1 ft per min (5 mm per sec). Values shall not exceed those indicated in step 2 above. Signs of bond failure or other defects are cause for pot bearing rejection.

B. Proof Loading

Perform, under maximum design loads, proof loading and compression deflection tests on a full-size pot bearing.

C. Cold Flow

Subject an approved sample of filled PTFE or unfilled PTFE to a static pressure of 3,500 psi (25 MPa) for at least 24 hours. Ensure that the PTFE material is bonded or mechanically connected to its backup material in the same way as the pot bearing.

Apparent cold flow of the PTFE material is cause for pot bearing rejection.

581.3.07 Contractor Warranty and Maintenance

General Provisions 101 through 150.

581.4 Measurement

Pot bearing assemblies are measured by Lump Sum for each bridge. Determine the actual quantities required before submitting the bid.

581.4.01 Limits

General Provisions 101 through 150.

581.5 Payment

The work in this Specification will be paid for on a Lump Sum basis.

Payment is full compensation for:

- Furnishing materials and equipment including structural steel components of the bearings, masonry plates, top plates, sole plates, PTFE, elastomers, anchor bolts, and welding
- Designing the pot bearing
- Performing tests
- Furnishing prototype bearings and test samples
- Performing Work as described and specified in this Specification or the Plans
- Providing incidentals to complete the work

Payment will be made under:

Item No. 581	Pot bearings, bridge No.___	Per lump sum

581.5.01 Adjustments

General Provisions 101 through 150.

Section 582—Rock Dowels

582.1 General Description

Specifications for this work will be included elsewhere in the Contract.

Section 590—Fiber Reinforced Polymer (FPR) Composite Material

590.1 General Description

Specifications for this work will be included elsewhere in the Contract.

Section 600—Controlled Low Strength Flowable Fill

600.1 General Description

This work consists of furnishing and placing ready-mixed or volumetric mixed Flowable Fill as an alternate to compacted soil as approved by the Engineer. Applications for this material include beddings, encasements, and closures for tanks and pipe, and general backfill for trenches and abutments.

600.1.01 Definitions

General Provisions 101 through 150.

600.1.02 Related References

Standard Specifications

Section 500—Concrete Structures

Section 801—Fine Aggregate

Section 830—Portland Cement

Section 831—Admixtures

Section 880—Water

Referenced Documents

SOP-10

General Provisions 101 through 150.

600.1.03 Submittals

Mix designs for flowable fill and other documentation listed in Subsection 500.1.03.

600.2 Materials

All materials shall meet the requirements of the following Specifications:

Material	Section
*Fine Aggregate	Subsection 801.2.02
Portland Cement	Subsection 830.2.01
**Fly Ash	Subsection 831.2.03
***Air-Entraining Admixtures	Subsection 831.2.01
Water	Subsection 880.2.01

NOTES:
***Gradation requirement is waived.**
****The requirements of Subsection 831.2.03 will be waived for fly ash.**
*****High air generators or foaming agents may be used in lieu of conventional air entraining admixtures and may be added at the job site and mixed according to the manufacturer's recommendation.**

600.2.01 Delivery, Storage, and Handling

General Provisions 101 through 150.

600.3 Construction Requirements

600.3.01 Personnel

General Provisions 101 through 150.

600.3.02 Equipment

General Provisions 101 through 150.

600.3.03 Preparation

Mix Design

Flowable fill can be batched by ready-mix or volumetrically mixed on site.

Ready-mixed flowable fill is a mixture of Portland cement, fly ash, fine aggregate, air entraining admixture, and water. Ready-mixed flowable fill contains a low cement content for reduced strength development.

Volumetric mixed flowable fill is a mixture of Class C fly ash or Portland cement, Class F fly ash, and water mixed on site.

1. Submit mix designs for flowable fill to the Engineer for approval by the Office of Materials. The following table lists mix design proportion ranges for excavatable and non-excavatable flowable fill:

***Table 1—Mix Designs for Flowable Fill**

	Ready-Mixed		Volumetric Mixed	
	Excavatable	**Non-Excavatable**	**Excavatable**	**Non-Excavatable**
Cement, Type I	75-100 lbs/yd^3 (45-60 kg/m^3)	75-150 lbs/yd^3 (45-90 kg/m^3)	90 lbs/yd^3 (53 kg/m^3)	150 lbs/yd^3 (90 kg/m^3)
Class C Fly Ash	-	-	735-840 lbs/yd^3 (333-381 kg/m^3)	841-1045 lbs/yd^3 (381-474 kg/m^3)
Class F Fly Ash	-	150-600 lbs/yd^3 (90-355 kg/m^3)	1250-2000 lbs/yd^3 (567-1186 kg/m^3)	1045-1940 lbs/yd^3 (474-1150 kg/m^3)
Water	**	**	**	**
***Air	15 to 35%	5-15%	NA	NA
***28-Day Compressive Strength	Maximum 100 psi (690 kPa)	Minimum 125 psi (860 kPa)	Maximum 100 psi (690 kPa)	Minimum 125 psi (860 kPa)
***Unit Weight (Wet)	90-100 lbs/ft^3 (1440-1600 kg/m^3)	100-125 lbs/ft^3 (1600-2000 kg/m^3)	90-100 lbs/ft^3 (1440-1600 kg/m^3)	100-125 lbs/ft^3 (1600-2000 kg/m^3)

***Amounts singly or in combination to make the mix yield one cubic yard (meter).**

****Mix designs shall produce a consistency that will result in a flowable self-leveling product at time of placement.**

*****The requirements for percent air, compressive strength, and unit weight are for laboratory designs only and are not intended for jobsite acceptance requirements.**

600.3.04 Fabrication

Ready-Mixed

Ensure ready-mixed flowable fill is manufactured at plants that qualify as approved sources according to the Standard Operating Procedure for Quality Assurance for Ready-Mix Concrete Plants in Georgia (SOP-10). Mix and deliver according to Subsection 500.2.01 of the Specifications or other methods approved by the Engineer. Revolution counter requirements are waived.

Volumetric Mixed

Ensure volumetric mixed flowable fill is manufactured through the use of volumetric mixers according to Subsection 500.3.02 of the Specifications or other methods approved by the Engineer.

600.3.05 Construction

When using as backfill for pipe, where flotation or misalignment may occur, assure correct alignment of the pipe by using straps, soil anchors, or other approved means of restraint.

Protect flowable fill from freezing for 36 hours after placement.

600.3.06 Quality Acceptance

Jobsite Acceptance

Acceptance of flowable fill is based on documentation as outlined in Subsection 500.1.03 of the Specifications and a minimum temperature of flowable fill at the point of delivery of 50 °F (10 °C).

600.3.07 Contractor Warranty and Maintenance

General Provisions 101 through 150.

600.4 Measurement

Flowable fill will be measured for payment in cubic yards (meters) in place and accepted when shown as a pay item in the Contract. When flowable fill is not shown as a pay item, include the cost of the work in the bid price for the appropriate item.

600.4.01 Limits

General Provisions 101 through 150.

600.5 Payment

When shown as a pay item in the Contract, flowable fill complete, in place and accepted will be paid for per cubic yard (meter).

Payment will be made under:

Item No. 600	Flowable fill	Per cubic yard (meter)

600.5.01 Adjustments

General Provisions 101 through 150.

Section 601—Criblock Retaining Wall

601.1 General Description

Specifications for this work will be included elsewhere in the Contract.

Section 603—Rip Rap

603.1 General Description

This work includes placing protective coverings of sand-cement bag rip rap or stone rip rap.

When required, this work includes placing crushed stone filter material or plastic filter fabric beneath stone rip rap on:

- Fill slopes
- Cut slopes
- End rolls
- Shoulders
- Ditches
- Stream banks
- Channel banks
- Other locations

603.1.01 Definitions

General Provisions 101 through 150.

603.1.02 Related References

A. Standard Specifications

Section 800—Coarse Aggregate

Section 801—Fine Aggregate

Section 805—Rip Rap and Curbing Stone

Section 815—Graded Aggregate

Section 830—Portland Cement

Section 832—Curing Agents

Section 880—Water

Section 881—Fabrics

B. Referenced Documents

AASHTO T 134

QPL 28

603.1.03 Submittals

General Provisions 101 through 150.

603.2 Materials

Ensure that the materials meet the requirements of the following Specifications:

Material	Specification
Portland cement	830.2.01
Rip Rap (Stone)	805.2.01
Membrane Curing Compound	832.2.03

Material	Specification
Stone Filter Blanket	815.2.01 or 800.2.01 (Size No. 467*)
Fine Aggregate for Sand Cement Rip Rap	801.2.03
Water	880.2.01
Woven Plastic Filter Fabric	881.2.05
*Except that up to 10% is allowed to pass the No. 4 (4.75 mm) sieve.	

A. Bags for Sand-Cement Bag Rip Rap

Use cotton, burlap, or fiber reinforced paper bags that can contain the sand-cement mixture without leaking during handling and placing. Do not use bags that previously held sugar or other material that will adversely affect the sand-cement mixture.

Ensure that the capacity is at least 0.75 ft^3 (0.02 m^3) but not greater than 2 ft^3 (0.5 m^3).

B. Stone Dumped Rip Rap

Stone dumped rip rap is designated on the Plans as Type 1 or Type 3 as defined in Subsection 805.2.01.

603.2.01 Delivery, Storage, and Handling

General Provisions 101 through 150.

603.3 Construction Requirements

603.3.01 Personnel

General Provisions 101 through 150.

603.3.02 Equipment

General Provisions 101 through 150.

603.3.03 Preparation

General Provisions 101 through 150.

603.3.04 Fabrication

General Provisions 101 through 150.

603.3.05 Construction

Construct this Work according to the following requirements:

A. Preparing the Foundations

Prepare the ground surface where the rip rap will be placed to conform with the correct lines and grades before beginning the placement.

1. When filling depressions, compact the new material with hand or mechanical tampers.

   Dispose of excess material by spreading it neatly within the right-of-way as an incidental part of the work.
2. Unless otherwise shown or provided below, begin placing the rip rap in a toe ditch constructed in original ground around the toe of the fill or the cut slope.

   Ensure that the toe ditch is 2 ft (600 mm) deep in original ground and the side next to the fill or cut has the same slope.

3. After placing the rip rap, backfill the toe ditch and spread the excess dirt neatly within the right-of-way as an incidental part of the work.
4. When beginning rip rap in water or below normal water level, substitute an apron of rip rap for the toe ditch.

   Ensure that the width and thickness of this apron is as shown on the Plans or determined by the Engineer.

B. Placing Stone Rip Rap

Place rip rap to the limits shown on the Plans or as directed by the Engineer. Place and classify rip rap as follows:

1. Stone Plain Rip Rap

   Dump and handle stone plain rip rap into place to form a compact layer to the design thickness.

   Ensure that the thickness tolerance for the course is plus 12 in (300 mm) with no under-tolerance. If the Plans do not show a thickness, place stone rip rap to at least 12 in (300 mm) thick, but no greater than 2 ft (600 mm) thick.
2. Stone Dumped Rip Rap

   Dump stone dumped rip rap into place to form a uniform surface as thick as specified in the Plans.

   a. Ensure that the thickness tolerance for the course is minus 6 in (150 mm) and plus 12 in (300 mm). If the Plans or Proposal do not specify a thickness, place the course to at least 2 ft (600 mm) thick.
   b. Recycled concrete that meets the requirements of Subsection 805.2.01 may be used instead of stone when shown on the Plans or approved by the Engineer.

      Use recycled concrete only when materials do not contain steel after processing.

      NOTE: Do not use recycled concrete in aesthetically sensitive areas.
3. Stone Grouted Rip Rap

   Place stone grouted rip rap according to specifications for stone plain rip rap and these guidelines:

   a. Prevent earth from filling the spaces between the stones.
   b. After placing the stone, fill the spaces between them with 1:3 grout composed of Portland cement and sand mixed thoroughly with enough water to make a thick, creamy consistency.
   c. Place the grout beginning at the toe. Finish it by sweeping with a stiff bristle broom.
   d. After grouting, cover the rip rap and keep it wet for 5 days, or cover and keep wet for 24 hours and then coat with white pigmented membrane curing compound.

C. Placing Filter

Place woven plastic filter fabric under all rip rap. Follow these requirements for placing the filter fabric:

1. Prepare the surface to receive the fabric until it is smooth and free from obstructions, depressions, and debris.
2. Place the fabric with the long dimension running up the slope. Minimize the number of overlaps.
3. Place the strips to provide a width of at least 1 ft (300 mm) of overlap for each joint.
4. Anchor the filter fabric in place with securing pins of the type recommended by the fabric manufacturer. Place the pins on or within 3 in (75 mm) of the centerline of the overlap.
5. Place the fabric so that the upstream strip will overlap the downstream strip.
6. Loosely place the fabric to prevent stretching and tearing during stone placement.

   Do not drop the stones more than 3 ft (1 m) during construction.
7. Always protect the fabric during construction from clogging due to clay, silts, chemicals, or other contaminants.
8. Remove contaminated fabric or fabric damaged during installation or rip rap placement. Replace with uncontaminated or undamaged fabric at no expense to the Department.

D. Placing Sand-Cement Bag Rip Rap

Place rip rap to the limits shown on the Plans or as directed by the Engineer.

1. Proportioning Materials

   Mix sand and Portland cement at the maximum ratio of 5:1 by weight.

   a. Obtain a minimum compressive strength of 500 psi (3 MPa) in 7 days.
   b. For sand-cement bag rip rap, use enough water to make up the optimum moisture content of the aggregate and cement as determined by AASHTO T 134.
   c. When sand-cement rip rap is to be prebagged, mix the sand cement dry. After placing each course, wet the bags until the bags are wet enough for proper cement hydration.

2. Placement

   Before placing sand-cement bag rip rap, fill the bags full, but allow room to tie the bags.

   a. Place the bagged rip rap by hand with the tied ends facing the same direction. Produce close, broken joints.
   b. Place header courses when directed by the Engineer or required by the Plans.
   c. After placing the bags, ram or pack them against one another to produce the required thickness and form a consolidated mass.
   d. Do not allow the top of each bag to vary more than 3 in (75 mm) above or below the required plane.

E. Placing Stone Blanket Protection

Ensure that the stone blanket protection meets the materials Specifications for stone filter blanket as specified in Subsection 603.2, “Materials,” except stone size No. 357 will be allowed instead of size No. 467.

Place stone blanket protection to the limits shown on the Plans, or as directed by the Engineer.

Uniformly place this material to the thickness shown on the Plans and to a thickness tolerance of 0.5 in (± 15 mm).

Do not use stone blanket protection on slopes steeper than two horizontal to one vertical or in areas highly susceptible to erosion. Do not use plastic filter fabrics with stone blanket protection.

603.3.06 Quality Acceptance

General Provisions 101 through 150.

603.3.07 Contractor Warranty and Maintenance

General Provisions 101 through 150.

603.4 Measurement

This work is measured for payment in square yards (meters) of accepted material of the specified thickness. Area measurements are made parallel to the surface on which the material is placed. Plastic filter fabric will be measured as the area of rip rap placed and accepted. No separate measurement will be made for fabric overlap joints, seams, or vertical sections at toe of slopes. No separate measurement is made for grout or cushioning sand.

Plan dimensions are figured by the use of filled bags 12 by 18 by 6 in. (300 by 450 by 150 mm) thick.

When filled bags are less than Plan dimensions or are of varying lengths or width, Plan square yards (meters) will be used to determine pay quantities, if overall dimensions are equal to or greater than those shown on the Plans.

603.4.01 Limits

General Provisions 101 through 150.

603.5 Payment

This work will be paid for at the Contract Price per square yard (meter) of material complete in place.

Payment will be made under:

Item No. 603	Stone plain rip rap ___ in (mm) thick	Per square yard (meter)
Item No. 603	Stone dumped rip rap (type)____ in (mm) thick	Per square yard (meter)

Item No. 603	Stone grouted rip rap (thick)	Per square yard (meter)
Item No. 603	Filter blanket	Per square yard (meter)
Item No. 603	Sand-cement bag rip rap, ____ in (mm) thick	Per square yard (meter)
Item No. 603	Stone blanket protection, ____ in (mm)	Per square yard (meter)
Item No. 603	Plastic filter fabric	Per square yard (meter)

603.5.01 Adjustments

General Provisions 101 through 150.

Section 607—Rubble Masonry

607.1 General Description

This work includes constructing rubble masonry from classes such as coursed, random, and random range work, from roughly squared and dressed stone laid with or without mortar as specified on the Plans.

607.1.01 Definitions

General Provisions 101 through 150.

607.1.02 Related References

A. Standard Specifications

Section 834—Masonry Materials

B. Referenced Documents

General Provisions 101 through 150.

607.1.03 Submittals

General Provisions 101 through 150.

607.2 Materials

Ensure that materials meet the requirements of the following specifications:

Material	Section
Stone for Masonry	834
Mortar and Grout	834

607.2.01 Delivery, Storage, and Handling

General Provisions 101 through 150.

607.3 Construction Requirements

607.3.01 Personnel

General Provisions 101 through 150.

607.3.02 Equipment

General Provisions 101 through 150.

607.3.03 Preparation

General Provisions 101 through 150.

607.3.04 Fabrication

General Provisions 101 through 150.

607.3.05 Construction

Construct rubble masonry as follows:

A. Shaping the Stone

Roughly square the stones on joints, beds, and faces. At angles and ends of walls, use selected stone roughly squared and pitched to line. If specified, finish the corners or angles in exterior surfaces with a chisel draft.

Before laying the stone in the wall, shape and dress it so that it will not loosen after it is placed. No dressing or hammering which will loosen the stone will be permitted after it is placed.

B. Laying the Stone

1. Decrease the stone thickness from the bottom to the top of wall.
2. Ensure that the headers in the heart of the wall are the same size as shown in the face and extend at least 12 in (300 mm) into the core or backing.
3. Ensure that headers in walls 2 ft (600 mm) or less in thickness extend entirely through the wall. The headers shall occupy at least 20 percent of the face of the wall.
4. Lay the masonry to line and in roughly leveled courses. Ensure that the bottom of the foundation is large, selected stones.
5. Lay the courses with leaning beds parallel to the natural bed of the material.
6. Regularly diminish the thicknesses of the courses, if varied, from the bottom to the top of the wall. Keep a surplus supply of stones at the site to select from.
7. When mortar masonry is specified:
   a. Clean each stone and saturate it with water before setting it. Clean and moisten the bed that will receive it.
   b. Bed the stones in freshly made mortar with full joints. Carefully settle the stones in place before the mortar sets.
   c. Do not permit spalls in the beds. Ensure that the joints and beds have an average thickness of not more than 1 in. (25 mm).
   d. Ensure that the vertical joints in each course break with the adjoining courses at least 6 in. (150 mm).
   e. Do not place vertical joints directly above or below a header joint.

      If a stone is moved or if the joint is broken after the mortar has set, take the stone up and thoroughly clean the mortar from the bed and joints. Reset the stone in fresh mortar.

      Do not lay the masonry in freezing weather or when the stone contains frost, except by permission and subject to required conditions.

      NOTE: Do not lay the masonry in freezing weather or when the stone contains frost, except with permission.

   f. Whenever possible, properly point the face joints before the mortar sets. If joints cannot be pointed, rake them out to a depth of 1 in (25 mm) before the mortar sets.

      Do not smear the stone face surfaces with the mortar forced out of the joints or the mortar used in pointing.
   g. Thoroughly wet the joints pointed after the stone is laid with clean water and fill with mortar.
   h. Drive the mortar into the joints and finish with an approved pointing tool.
   i. Keep the wall wet while pointing. In hot or dry weather, protect the pointed masonry from the sun and keep it wet for at least three days after the pointing is finished.

NOTE: Do not perform pointing in freezing weather or when the stone contains frost.

j. After the pointing is completed and the mortar is set, thoroughly clean the walls and leave them in a neat condition.

8. Dry Rubble Masonry

When laying dry rubble:

a. Take care that each stone takes a firm bearing no less than in three separate points upon the underlying course.

b. Ensure that face joints are no greater than 1 in (25 mm) wide.

c. Chink the open front and rear joints with spalls fitted to take firm bearing upon the top and bottom surfaces throughout the length of the stone.

d. Fill the interstices in the heart of the wall with spalls. When specified, thoroughly slush the open joint on the rear surfaces with mortar to prevent water from seeping through the joints.

C. Weep Holes

Provide adequate drainage for retaining walls with weep holes as shown on the Plans or required by the Engineer.

When backfilling at weep holes, build chimneys and french drains extending through the parts of the fill to be drained. The cost of chimneys, weep holes, and french drains is included in the Contract Price for rubble masonry.

D. Copings

Use copings, bridge seats, and back walls made from the materials shown on the Plans. If not otherwise specified, they shall be Class A concrete.

Make concrete copings in sections at least 12 in (300 mm) thick and from 5 to 10 ft (1.5 to 3 m) long, extending the full width of the wall. Cast the sections in place or precast and set them in place in free mortar beds.

607.3.06 Quality Acceptance

General Provisions 101 through 150.

607.3.07 Contractor Warranty and Maintenance

General Provisions 101 through 150.

607.4 Measurement

This work is measured in cubic yards (meters) of accepted masonry. The dimensions shown on the Plans shall be used except for changes made by the Engineer.

Excavation for rubble masonry is not measured for separate payment.

607.4.01 Limits

General Provisions 101 through 150.

607.5 Payment

This work will be paid for at the Contract Price per cubic yard (meter) for mortar rubble masonry or dry rubble masonry complete in place.

Payment will be made under:

Item No. 607	Mortar rubble masonry	Per cubic yard (meter)
Item No. 607	Dry rubble masonry	Per cubic yard (meter)

607.5.01 Adjustments

General Provisions 101 through 150.

Section 608—Brick Masonry

608.1 General Description

This work includes laying brick in mortar.

608.1.01 Definitions

General Provisions 101 through 150.

608.1.02 Related References

A. Standard Specifications

Section 207—Excavation and Backfill for Minor Structures

Section 834—Masonry Materials

B. Referenced Documents

General Provisions 101 through 150.

608.1.03 Submittals

General Provisions 101 through 150.

608.2 Materials

Ensure that the materials meet the requirements of the following Specifications:

Brick for Masonry	834
Mortar and Grout	834

608.2.01 Delivery, Storage, and Handling

General Provisions 101 through 150.

608.3 Construction Requirements

608.3.01 Personnel

General Provisions 101 through 150.

608.3.02 Equipment

General Provisions 101 through 150.

608.3.03 Preparation

General Provisions 101 through 150.

608.3.04 Fabrication

General Provisions 101 through 150.

608.3.05 Construction

A. Brick Selection

Select brick for exposed surfaces, corners, etc. from brick approved as to color and uniformity.

B. Laying Brick

Follow these guidelines when laying brick:

1. Saturate the brick with water before laying it.
2. Lay the brick using the shove-joint method to bond it thoroughly into the mortar.
3. Arrange headers and stretchers to bond the mass thoroughly.
4. For straight masonry walls using stretcher courses, ensure that at least 1 course in 7 is a header course.
5. Finish joints properly as the Work progresses. Create joints at least 0.25 in (5 mm) but no more than 0.5 in (15 mm) thick.

NOTE: Do not use spalls or bats except to shape around irregular openings or to use at corners.

6. Lay brick evenly and neatly.

C. Observing Weather Limitations

Do not lay brick in freezing weather or when the bricks contain frost, except with permission from the Engineer and when required.

In hot and dry weather, protect the masonry and keep it wet for at least 48 hours after laying the brick.

D. Backfilling

Do not place backfill against the masonry until it is at least 7 days old. During cold weather, the restricted period may be longer as directed.

608.3.06 Quality Acceptance

All brick masonry shall present an even, uniform, neat, and workmanlike appearance.

608.3.07 Contractor Warranty and Maintenance

General Provisions 101 through 150.

608.4 Measurement

This work is measured for payment by one of the two methods specified below. The unit of measurement is stated in the Contract. Separate payment is not made for brick masonry used in catch basins, inlets, manholes, and similar items, which are measured and paid for per each.

Excavation and backfill for this work is not measured for payment except as specified in Section 207. Mortar is not paid for separately, and the cost is included in the Contract Price for brick masonry.

A. Measurement by Cubic Meter

When brick masonry is measured by the cubic yard (meter), the volume measured is the brick and mortar placed within the lines indicated on the Plans and typical cross sections or as directed by the Engineer.

B. Measurement by Number of Bricks

When brick masonry is measured by the brick, the unit of measurement is each thousand (M) bricks and fraction placed within the lines indicated on the Plans and typical cross sections or as directed by the Engineer.

608.4.01 Limits

General Provisions 101 through 150.

608.5 Payment

This work will be paid for at the Contract Price per cubic yard (meter) or per thousand (M) bricks for brick masonry complete in place.

Payment will be made under:

Item No. 608	Brick masonry	Per cubic yard (meter)
Item No. 608	Brick masonry	Per thousand (M)

608.5.01 Adjustments

General Provisions 101 through 150.

Section 609—Removal of Portland Cement Concrete Roadway Slabs

609.1 General Description

This work includes removing the full depth of existing jointed Portland cement concrete pavement slabs of various lengths. The slabs to be removed are shown on the Plans or are designated by the Engineer.

609.1.01 Definitions

General Provisions 101 through 150.

609.1.02 Related References

A. Standard Specifications

Section 886—Epoxy Resin Adhesives

B. Referenced Documents

General Provisions 101 through 150.

609.1.03 Submittals

General Provisions 101 through 150.

609.2 Materials

General Provisions 101 through 150.

609.2.01 Delivery, Storage, and Handling

General Provisions 101 through 150.

609.3 Construction Requirements

609.3.01 Personnel

General Provisions 101 through 150.

609.3.02 Equipment

General Provisions 101 through 150.

609.3.03 Preparation

General Provisions 101 through 150.

609.3.04 Fabrication

General Provisions 101 through 150.

609.3.05 Construction

The Engineer will determine which slabs to remove and replace and whether to use full or partial slab replacement.

A. Partial Slab Replacements

The Engineer will determine the limits of removal. Remove and replace at least 6 ft (1.8 m) of slab measured longitudinally and 12 ft (3.6 m) measured transversely.

Any slab removal beyond the limits determined by the Engineer will be at no additional cost to the Department for removal and replacement.

1. Saw the slab full depth longitudinally along the center-line joint and shoulder joint and transversely along the area marked for removal, including transverse joints where applicable.
   a. If approved by the Engineer, omit the shoulder joint cut if doing so does not damage the shoulder.
   b. If necessary and if approved by the Engineer, make additional cuts within the removal area to remove the damaged slab more easily.
2. Thoroughly remove saw slurry and other contaminants from the over-cutting beyond limits of the removal area. Repair by filling the overcuts with Type II epoxy adhesive that meets the requirements of Section 886.

   Clean and fill the overcuts as soon as possible, but no later than when the joints are sealed.
3. Remove the damaged slabs by lifting. Do not fragment the slabs for removal unless approved by the Engineer.
4. Drill holes in each slab section to accommodate the expanding type lift anchors. Remove sections nearest the centerline joint first to minimize damage to the shoulder.

NOTE: During removal, avoid damaging the pavement base, shoulder, or sides that will not be removed.

5. Repair the damaged shoulder area to the Engineer's satisfaction at the Contractor's expense.
6. If the adjacent concrete pavement is damaged during removal, enlarge the removal area to include the damaged sections of adjacent concrete.

   All applicable rules regarding the minimum size of remaining slab will apply as shown on the Plans.

   Remove and replace additional slab lengths damaged from removing the initial slab at the Contractor's expense.
7. Remove loose underlying base material to produce a sound, well-compacted base.
8. Thoroughly tamp the material loosened in the removal process to the Engineer's satisfaction before replacing the slab.
9. Dispose of the slabs and underlying base material removed during this work.
10. Obtain the disposal site and necessary permits and agreements.

609.3.06 Quality Acceptance

General Provisions 101 through 150.

609.3.07 Contractor Warranty and Maintenance

General Provisions 101 through 150.

609.4 Measurement

Slabs and portions of slabs removed are measured by the square yard (meter) using the average squared dimensions. Removing underlying base material and cleaning and repairing overcuts is not measured for payment.

609.4.01 Limits

General Provisions 101 through 150.

609.5 Payment

Slabs and portions of slabs, measured as specified in Subsection 609.4, "Measurement" above, will be paid for at the Contract Unit Price bid. Payment is full compensation for sawing, cleaning, repairing over-cutting, and removing and disposing of the concrete and any underlying base material.

Payment will be made under:

Item No. 609	Remove roadway slab	Per square yard (meter)

609.5.01 Adjustments

General Provisions 101 through 150.

Section 610—Removal of Miscellaneous Roadway Items

610.1 General Description

This work includes removing, salvaging, or disposing of items listed in the Proposal as Pay Items to be removed, and backfilling the excavations made during removal.

Remove structures not separately listed as Pay Items in the Contract as specified in Sections 201, 202, or 205.

610.1.01 Definitions

General Provisions 101 through 150.

610.1.02 Related References

A. Standard Specifications

Section 201—Clearing and Grubbing Right-of-Way

Section 202—Random Clearing and Grubbing

Section 205—Roadway Excavation

Section 208—Embankments

Section 540—Removal of Existing Bridge

Section 611—Relaying, Reconstructing, or Adjusting to Grade of Miscellaneous Roadway Structures

B. Referenced Documents

General Provisions 101 through 150.

610.1.03 Submittals

General Provisions 101 through 150.

610.2 Materials

610.2.01 Delivery, Storage, and Handling

A. Materials Retained by the Department

Unless removed under Sections 201, 202, or 205, or unless otherwise provided for in the Plans or Proposal, carefully remove materials with a salvage value.

1. Neatly stack or stockpile the materials along the right-of-way near the removal point and above high water.
2. Store highway signs standing on edge and protected from the elements.
3. Replace materials damaged, defaced, or destroyed by removing them carelessly at no cost to the Department.
4. Notify the Engineer when the materials have been stockpiled and are ready to be transported.
5. Keep materials secure and replace (at the Contractor’s expense) materials lost, stolen, or missing within a maximum of 10 days after the Engineer has been notified that the materials are ready to be transported.

B. Materials Reused in the Work

Maintain structures, portions of structures, and other materials to be salvaged and reused in reconstruction work.

Assume responsibility for the material until Project Final Acceptance.

Repair or replace materials lost or stolen before reuse at the Contractor's expense.

Spread suitable surplus excavation material on the slopes of the roadway embankments. Otherwise, dispose of the waste materials off the right-of-way at the Contractor's expense.

C. Bridge Components

Dispose of bridge components according to Section 540. Replace or repair at the Contractor's expense structures, portions of structures, or materials to be salvaged, retained, or used in the reconstructed work but that were carelessly damaged or destroyed by the Contractor.

610.3 Construction Requirements

610.3.01 Personnel

General Provisions 101 through 150.

610.3.02 Equipment

General Provisions 101 through 150.

610.3.03 Preparation

If removing a structure may endanger a new construction, finish that part of the work before beginning the new construction.

610.3.04 Fabrication

General Provisions 101 through 150.

610.3.05 Construction

A. Protection of Remaining Structures

Do not use explosives, equipment, or devices that may endanger structures, facilities, or other property to remain in place. If parts of structures are to remain in place, protect them from damage during construction. Protect and preserve the salvage value of materials to be salvaged.

B. Extent of Removal

Separate and remove existing structures, with their attached parts and connections, as shown on the Plans or designated to be removed.

1. When a part of an existing structure is to remain in place, ensure that the part to be removed extends to a construction joint or is cut off to the lines shown on the Plans, leaving reasonably smooth faces.

   Remove walls and other masonry construction to the bottoms of the foundations unless otherwise specified.
2. Remove walls and their foundations within the roadbed area to an elevation at least 3 ft (900 mm) below the top of the finished subgrade, unless otherwise specified.
3. See Subsection 201.3.05.C.1.c, "Abandoned Obstructions," for guidelines for rigid surfaces.

C. Railway Tracks

Removing railway tracks includes removing rails, ties, switches, towers, concrete structures, sign posts, and other related railway structures. Leave ballast in place, unless otherwise specified.

D. Inlets, Catch Basins, Manholes, and Culverts

1. Remove gratings, traps, and other metal castings of inlets, catch basins, and manholes without damaging them. Reuse them on new structures or salvage them, whichever the Engineer directs.
2. Remove old culverts down to the ground level or to the adjacent water level, unless otherwise shown on Plans.
3. Remove the bottom slabs of inlets, catch basins, manholes, and culverts. If the Engineer permits them to remain in place, break them up so that water will readily pass through them.

E. Removing Pipe

Uncover the pipe to remove it without damage. Exercise care in removing the pipe. Replace pipe sections damaged by negligence at the Contractor's expense.

After removing the pipe, clean it and neatly stack it at points directed by the Engineer along the line of the work. Unless otherwise specified, the pipe is the property of the Department.

F. Septic Tanks

When encountering septic tanks, completely remove the contents of each tank.

1. Remove and dispose of the tank's contents as required by the State Department of Health and local health authorities.
2. Before backfilling the remaining portion of the septic tank, drill holes in the bottom of the tank or break it up as the Engineer directs, to permit drainage.

G. Backfilling

Backfill trenches and other excavations dug for removing miscellaneous structures.

1. Use approved materials in the backfill.
2. Compact the backfill in layers no more than 6 in (150 mm) thick and with the proper moisture content. Use pneumatic tampers or other approved equipment.
3. Under the roadway, ensure that the degree of compaction conforms to Section 208.

   Elsewhere, compact the backfill equal to the soil surrounding it.

H. Structures to Remain

Preserve unharmed the miscellaneous structures, including fences, buildings, pipe lines, pole lines, water and sewer lines, and other improvements that owners or the Department will retain or that others will remove.

I. Culverts to be Extended

Where concrete culverts are to be extended, remove a minimum amount of concrete in parapets, wing walls, and wing wall footings to clear the new construction. Make the joint or connection as shown on the Plans or as directed by the Engineer.

J. Fences

When removing fences, do not allow livestock to escape. If fences are to be reset according to Section 611, protect the spelter coating of fence fabric, steel fence posts, and braces.

The Engineer will require that reusable posts removed be clean and free of concrete. If desired, furnish new posts instead of cleaning the old ones at no additional cost to the Department.

K. Raised Edge Curb

Remove raised edge curb to a reasonably true line at the elevation of normal finished pavement.

If the average of the plus and minus deviations approximate the original normal edge of pavement, a tolerance of approximately 1 in (25 mm) above or below this elevation will be accepted.

Do not shatter pavement that will be retained.

L. Highway Signs

Remove the entire sign from the supports, and remove the supports from the concrete foundation.

M. Lighting Standards and Appurtenances

Disassemble the lighting standard, and separate each component part including the transformer base. Cut the underground duct before removing these items.

N. Removal of Existing Building Structures

Demolish, remove, and dispose of all building structures within the right of way and easement areas including concrete slabs, footings, foundations, etc. as shown on the plans. Grade all disturbed ground to a reasonably smooth and pleasing appearance, free from loose boulders and other debris that would interfere with the use of power mowers. Grass all disturbed areas.

Prior to demolition or removal:

1. Inspect all building structures for the presence of asbestos. The inspection shall be done by an EPA Asbestos Hazard Emergency Response Act (AHERA) accredited inspector whose certification is current.
2. Provide a copy of all inspection reports including the inspector's credentials to the Engineer.
3. Provide written notice of intent to demolish to the Georgia Environmental Protection Division (EPD) of the Georgia Department of Natural Resources in accordance with EPD regulations with a copy to the engineer. This notice is required even if there is no asbestos present.

If there is asbestos present, its removal shall be done by a contractor licensed with the EPD in accordance with the Rules of Georgia Department of Natural Resource Environmental Protection Division chapter 391-3-14-04. All asbestos removal and disposal shall be done in accordance with EPD regulations. All asbestos removal shall be considered as Extra Work and payment will be made in accordance with Subsection 109.05.

610.3.06 Quality Acceptance

General Provisions 101 through 150.

610.3.07 Contractor Warranty and Maintenance

General Provisions 101 through 150.

610.4 Measurement

Removing miscellaneous roadway items is measured to determine the Unit or Units of each type specified in the Proposal and on the Plans. Only when listed as a Pay Item in the Contract will a removed item be measured for separate payment.

610.4.01 Limits

General Provisions 101 through 150.

610.5 Payment

Removing miscellaneous roadway items will be paid for at the Contract Unit Price. Payment is full compensation for removing and disposing of the structures according to these Specifications.

Payment will be made under:

Item No. 610	Remove_____	Per unit shown in Proposal

610.5.01 Adjustments

General Provisions 101 through 150.

Section 611—Relaying, Reconstructing, or Adjusting to Grade of Miscellaneous Roadway Structures

611.1 General Description

This work includes relaying, reconstructing, resetting, adjusting to grade, capping minor structures, resetting guard rail, or adjusting other miscellaneous roadway structures as specified in the Proposal or on the Plans.

611.1.01 Definitions

General Provisions 101 through 150.

611.1.02 Related References

A. Standard Specifications

Section 610—Removal of Miscellaneous Roadway Items

Section 641—Guard Rail

Section 668—Miscellaneous Drainage Structures

Section 854—Castings and Forgings

B. Referenced Documents

General Provisions 101 through 150.

611.1.03 Submittals

General Provisions 101 through 150.

611.2 Materials

Most materials for the work in this Specification are salvaged from the removal of existing structures. The Engineer will determine the suitability of the salvaged material for use.

Use other materials to complete the structure, such as mortar, sand-cement grout, sand for sand cushion, bituminous filler, brick, and other materials that meet the requirements of the applicable Specifications for such materials for use in new structures of the same character and type.

611.2.01 Delivery, Storage, and Handling

General Provisions 101 through 150.

611.3 Construction Requirements

611.3.01 Personnel

General Provisions 101 through 150.

611.3.02 Equipment

General Provisions 101 through 150.

611.3.03 Preparation

General Provisions 101 through 150.

611.3.04 Fabrication

General Provisions 101 through 150.

611.3.05 Construction

A. Miscellaneous Roadway Items

Follow these procedures to construct miscellaneous roadway items:

1. Remove existing structures to be rebuilt according to Section 610.
2. Clean the material salvaged for use in the rebuilt structure and stockpile it in convenient places. Protect it from damage until it is used.
3. Dispose of the portions of structures not suitable for reuse as provided in Section 610. Replace them with suitable new material.
4. Relay or rebuild the structures according to the Specifications for new structures of the same type.
5. Adjust to the required grade miscellaneous structures specified in the Proposal or on the Plans by raising or lowering the upper portion of the fixture, including sleeve extensions, adjustable manhole rings, gaskets, mastic, mortar, masonry, and other material.
6. Furnish materials such as mortar, sand-cement grout, sand cushion, bituminous filler, brick, castings, and other materials to excavate, trench, prepare earth foundation, backfill, and other work necessary to complete the Item.

B. Capping an Existing Structure

When capping an existing structure requires removing adjacent existing pavement, sidewalk, curb, gutter, or other improvement not otherwise affected by the work, follow these guidelines:

1. Remove the improvements to expose only the portion of the structure to be modified.
2. Replace the removed improvements to the Engineer's satisfaction without additional compensation.
3. Remove enough existing masonry to lower the top elevation to a point not less than the thickness of the cap plus 3 ft (1 m) below subgrade elevation, unless otherwise indicated.
4. Cap the remaining portion of the structure with a fitted reinforced concrete cover constructed to the general details shown on the Plans.

   Grates, rings, plates, covers, hoods, or other castings or fittings removed while capping and not re-used become the property of the Department unless otherwise indicated on the Plans.

C. Resetting Guard Rail

When resetting the guard rail is specified in the Proposal:

1. Reset guard rail removed according to Section 610 where the Plan indicates and to the required post spacing.
2. Furnish materials, including additional hardware, offset blocks, and posts.
3. Replace posts that do not conform to the Plans.
4. Follow the applicable provisions of Section 641.

D. Raising Manholes

When raising manholes:

1. Adjustments may be made by using adjustable extension rings that do not require removing the existing manhole frame.
2. Ensure that the extension device locks to the existing frame and permits height and diameter adjustment. The adjustable extension ring to be used shall have the Engineer's prior approval.
3. Choose an extension ring compatible with the existing casting and cover. Ensure that the adjustment range conforms to the finished pavement surface.
   a. Use an adjustable extension ring made of materials that meet the requirements of Subsection 854.2.01 or are manufactured from ASTM A 36/A 36M steel and approved by the Office of Materials.
   b. Ensure that the extension ring and cover are machine ground to reduce contact irregularity. Ensure that the grates are rattleproof.

c. Obtain the Engineer's approval for the type of adjustable extension ring used.

E. Replacing Fences

Replace fences removed under Section 610 in kind, using the removed materials as far as possible. Unless the Plans provide for new fence at the particular location, include new materials required in the Bid Price for resetting fence.

611.3.06 Quality Acceptance

General Provisions 101 through 150.

611.3.07 Contractor Warranty and Maintenance

General Provisions 101 through 150.

611.4 Measurement

Relaying, reconstructing, or adjusting to grade, capping minor structures, resetting guard rail, or adjusting other miscellaneous roadway structures is measured to determine the unit or units of each type completed and accepted.

Manhole tops to be raised or lowered 2 ft (600 mm) or less are considered "Adjust to Grade."

Manhole tops to be raised between 2 ft (600 mm) and 6 ft (1.8 m), or tops to be lowered more than 2 ft (600 mm), are considered "Reconstruct Manhole" and are paid as shown in Subsection 611.5, "Payment."

Remove manholes to be raised more than 6 ft (1.8 m) as clearing and grubbing, and construct a new manhole in its place according to Section 668.

611.4.01 Limits

General Provisions 101 through 150.

611.5 Payment

Relaying, reconstructing, resetting, adjusting to grade, capping minor structures, resetting guard rail, or adjusting other miscellaneous roadway structures will be paid for at the Contract Unit price. Payment is full compensation for relaying, resetting, reconstructing, or adjusting to grade the structures as specified in this Specification.

Excavation and backfill necessary for capping is considered incidental to the Item and is not paid for separately.

Tapping a new pipeline into an existing structure is not considered reconstruction of the existing structure.

Payment will be made under:

Item No. 611	Relay	Per unit shown in Proposal
Item No. 611	Reconstruct	Per unit shown in Proposal
Item No. 611	Reset	Per unit shown in Proposal
Item No. 611	Adjust to grade	Per unit shown in Proposal
Item No. 611	Cap minor structures	Per unit shown in Proposal

611.5.01 Adjustments

General Provisions 101 through 150.

Section 612—Construct, Maintain, and Remove Median Crossover

612.1 General Description

This item includes constructing, maintaining, and removing median crossovers according to the Plans.

612.1.01 Definitions

General Provisions 101 through 150.

612.1.02 Related References

A. Standard Specifications

Section 700—Grassing

B. Related Documents

General Provisions 101 through 150.

612.1.03 Submittals

General Provisions 101 through 150.

612.2 Materials

Furnish materials that meet the following requirements:

A. Drainage

Use temporary drainage structures, if required, as shown on the Plans or as directed by the Engineer. Use structures satisfactory for the required use. They do not have to be new.

B. Other Materials

Ensure that other materials meet the applicable requirements of the Specifications.

612.2.01 Delivery, Storage, and Handling

General Provisions 101 through 150.

612.3 Construction Requirements

612.3.01 Personnel

General Provisions 101 through 150.

612.3.02 Equipment

General Provisions 101 through 150.

612.3.03 Preparation

General Provisions 101 through 150.

612.3.04 Fabrication

General Provisions 101 through 150.

612.3.05 Construction

A. Constructing the Crossover

Construct the crossover according to the details shown on the Plans and these guidelines:

1. Place the materials to construct each crossover according to the applicable Specifications and as directed by the Engineer.
2. Place and remove barricades and warning signs as directed by the Engineer.
3. When the Engineer determines that the crossover has served its purpose, remove and dispose of the materials, including temporary drainage structures used in its construction.
4. Reshape the area where the crossover was removed to comply with the appropriate typical section, and grass the reshaped area.
5. Grass according to Section 700. Substitute loose sod if the Engineer approves.

612.3.06 Quality Acceptance

General Provisions 101 through 150.

612.3.07 Contractor Warranty and Maintenance

Maintenance includes, but is not limited to, filling washes as they occur and repairing defects in the pavement as directed by the Engineer.

612.4 Measurement

Median crossovers, constructed, maintained, and removed are measured by the individual unit.

612.4.01 Limits

General Provisions 101 through 150.

612.5 Payment

Crossovers measured as shown above will be paid for at the Unit Price for each crossover constructed, maintained, and removed. Payment is full compensation for:

- Earthwork, materials, pavement, drainage structures, signs, and barricades used and reused as directed on the Plans.
- Removal and disposal of materials when the crossover is no longer needed
- Grassing or regrassing of the disturbed areas

The first monthly statement following satisfactory construction will pay 75 percent of the Unit Price bid. The remaining 25 percent will be paid upon removal and restoration of the site.

Payment will be made under:

Item No. 612	Construct, maintain, and remove median crossover, station _____	Per each

612.5.01 Adjustments

General Provisions 101 through 150.

Section 613—Docks

613.1 General Description

This work includes constructing docks according to Plan details and locations, maintaining the docks, and/ or removing the docks as specified by the Engineer.

613.1.01 Definitions

General Provisions 101 through 150.

613.1.02 Related References

A. Standard Specifications

Section 863—Preservative Treatment of Timber Products

B. Referenced Documents

General Provisions 101 through 150.

613.1.03 Submittals

When the Proposal includes constructing docks, submit to the Engineer for approval three prints or a reproducible drawing showing the proposed construction details for each dock.

The Engineer will check the design and request changes to ensure the design conforms with the Specifications and the intended purpose.

After making the required changes, resubmit the drawings to the Engineer for final approval. Do not begin work on the dock until the drawings receive the Engineer's final approval.

613.2 Materials

Ensure that dock timber (except timber used for handrails) is creosote-treated according to Section 863.

Piles for docks may be untreated, but they must be peeled and have a minimum 8 in (200 mm) butt diameter. Use piles of a wood species that will withstand driving and will support the load required by the Engineer.

Nails and hardware do not need to be galvanized. Materials used to construct these expendable items will not be pre-inspected, sampled, or tested.

Replace, repair, or strengthen defective, worn, deteriorated, corroded, or unsatisfactory material according to Subsection 613.3.07.A, "Dock Maintenance."

613.2.01 Delivery, Storage, and Handling

General Provisions 101 through 150.

613.3 Construction Requirements

613.3.01 Personnel

General Provisions 101 through 150.

613.3.02 Equipment

General Provisions 101 through 150.

613.3.03 Preparation

General Provisions 101 through 150.

613.3.04 Fabrication

General Provisions 101 through 150.

613.3.05 Construction

Ensure that the dock is suitable for its intended purpose. Select construction methods approved by the Engineer.

Drive piling deep enough to provide a safe dock under weather and construction conditions peculiar to the Project area.

613.3.06 Quality Acceptance

General Provisions 101 through 150.

613.3.07 Contractor Warranty and Maintenance

A. Dock Maintenance

Maintain the docks to the satisfaction of the Engineer. Follow these guidelines:

1. Immediately replace, repair, or strengthen defective, unduly worn, corroded, deteriorated, or otherwise unsatisfactory material at the Engineer's request.

NOTE: If repairs are not made promptly, the Engineer may make the repairs and have the costs deducted from the monies due the Contractor.

2. If the dock will not be removed as part of the Work, maintain it as directed by the Engineer to keep it in serviceable condition for future use before moving off the Project or relinquishing it to a subsequent Contractor.
3. When the dock was constructed for use on a previous Project or Contract, assume responsibility for the dock and promptly restore and maintain it in a safe and satisfactory condition as directed by the Engineer. Maintain the dock for the duration of the Contract as directed by the Engineer.

B. Dock Removal

When the dock is no longer needed the Engineer will direct in writing to remove it. The salvaged material becomes the Contractor's property.

613.4 Measurement

This work is not measured separately for payment.

613.4.01 Limits

General Provisions 101 through 150.

613.5 Payment

This item will be paid for according to the Plans, Proposal, and the following:

A. Construct, Maintain, and Remove Dock

After the dock is constructed satisfactorily, 50 percent of the Lump Sum price bid will be included in the next monthly statement.

If the dock maintenance is satisfactory, monthly increments of 35 percent of the Lump Sum price bid will be paid based on the percent complete of the Contract. When the dock is no longer required and has been removed, the remaining 15 percent of the Lump Sum price bid will be included in the next monthly statement.

Each dock, complete in place and accepted, suitably maintained until no longer needed, and satisfactorily removed, will be paid for at the Lump Sum price bid, which is full compensation for the Item.

B. Construct and Maintain Dock

After the dock is constructed satisfactorily, 60 percent of the Lump Sum price bid will be paid. If the dock maintenance remains satisfactory, the remaining 40 percent of the Lump Sum price bid will be paid in monthly increments based on the percent complete of the Contract.

C. Maintain and Remove Dock

When the dock was constructed for use on a previous Project or Contract as defined in Subsection 613.3.07.A.3, the Contractor who satisfactorily maintains and removes the dock will be paid 50 percent of the Lump Sum price bid in monthly increments based on the percent complete of the Contract.

When the dock is removed, the remaining 50 percent of the Lump Sum price bid will be paid on the next monthly statement.

D. Maintain Docks

When the Contractor assumes satisfactory maintenance of the dock as provided in Subsection 613.3.07.A, the Lump Sum price bid will be paid in monthly increments based on the percent complete of the Contract.

Payment will be made under:

Item No. 613	Construct, maintain, and remove dock No.____	Per lump sum
Item No. 613	Construct and maintain dock No._____	Per lump sum
Item No. 613	Maintain and remove dock No._____	Per lump sum
Item No. 613	Maintain dock No._____	Per lump sum

613.5.01 Adjustments

General Provisions 101 through 150

Section 615—Jacking or Boring Pipe

615.1 General Description

This work includes installing different sizes and types of pipe by jacking or boring through various materials.

615.1.01 Definitions

General Provisions 101 through 150.

615.1.02 Related References

A. Standard Specifications

Section 205—Roadway Excavation

Section 208—Embankments

Section 550—Storm Drain Pipe, Pipe-Arch Culverts, and Side Drain Pipe

Section 841—Iron Pipe

Section 847—Miscellaneous Pipe

B. Referenced Documents

General Provisions 101 through 150.

615.1.03 Submittals

A. Handling Method

Furnish for the Engineer's approval, a plan showing the proposed method of handling, including:

- Design for the jacking head, jacking support, or back stop
- Arrangement and position of jacks, pipe guides, etc., complete as assembled

B. Welding Procedure

Before welding steel pipe or ductile iron pipe as casing and carrier, submit to the State Materials Engineer a written welding procedure. Include joint details, preheat temperature, and electrodes to be used. Do not use welded steel pipe as a sanitary sewer carrier.

615.2 Materials

Use pipe types and sizes that conform to the Plans and the following:

Material	Section
Corrugated Metal Pipe	550
Concrete Pipe	550
Steel Pipe	847.2.02
Ductile Iron Pipe (Plain Ends)	841

615.2.01 Delivery, Storage, and Handling

General Provisions 101 through 150.

615.3 Construction Requirements

615.3.01 Personnel

General Provisions 101 through 150.

615.3.02 Equipment

General Provisions 101 through 150.

615.3.03 Preparation

General Provisions 101 through 150.

615.3.04 Fabrication

General Provisions 101 through 150.

615.3.05 Construction

Dispose of the excavated material from the following jacking or boring operations or use it as directed by the Engineer at no additional cost to the Department.

A. Jacking

Follow these requirements when jacking:

1. Excavate suitable pits or trenches for the jacking operation and for placing the end joints of pipe, when required. Securely sheet and brace the pits or trenches to prevent caving, where necessary.
2. When installing pipe under railroads, highways, streets, or other facilities by jacking or boring, perform construction and prevent:

- Interfering with the facility operation
- Weakening the roadbed or structure

3. To force the pipe through the roadbed, use a jack with a head constructed to apply uniform pressure around the ring of the pipe.
4. Set the pipe to be jacked on guides, braced together to properly support the pipe section and to direct it to the proper line and grade.
5. Excavate the roadbed as follows:
   a. Excavate roadbed material just ahead of the pipe.
   b. Remove the excavated material through the pipe.
   c. Ensure that the excavation diameter conforms to the outside diameter and circumference of the pipe as closely as possible.
6. Force the pipe through the roadbed into the excavated space.
7. Use an approved mix to pressure grout voids that develop during installation and that the Engineer determines are detrimental to the work.
8. Ensure that the excavation does not extend beyond the pipe more than 2 ft. (600 mm).

   Decrease the distance at the Engineer's direction or if the character of the excavated material allows.
9. Jack the pipe from the low or downstream end. The line and grade from the pipe's final position established by the Engineer may vary no more than two percent in lateral alignment and one percent in vertical grade. Ensure that the final grade of the flow line is in the direction indicated on the Plans.
10. Use a cutting edge around the head end. Extend it a short distance beyond the pipe end with inside angles or lugs to keep the cutting edge from slipping back into the pipe.
11. Once the pipe jacking has begun, proceed with the operation without interruption to prevent the pipe from becoming firmly set in the embankment.
12. Remove and replace pipe damaged in jacking operations at no additional expense to the Department.
13. After completing the jacking, immediately backfill the excavated pits or trenches.

B. Boring

Proceed with the boring from a pit provided for boring equipment and workmen. Complete these steps:

1. Excavate for pits and shoring installation as outlined above.
2. Locate the pit at the Engineer's approval.
3. Bore the holes mechanically using a pilot hole approximately 2 in. (50 mm) in diameter that is bored the entire length of the installation.
   a. Check the pilot hole for line and grade on the opposite end of the bore from the work pit.
   b. Use the pilot hole to serve as the center line of the larger diameter hole to be bored.
4. Place excavated material near the top of the working pit and dispose of it as required. Use water or other fluids with the boring operation to lubricate the cuttings. Do not perform jetting.
5. In unconsolidated soil formations, use a gel-forming collodial drilling fluid with at least 10 percent of high grade carefully processed bentonite to consolidate excavated material, seal the walls of the hole, and lubricate subsequent removal of material and immediate pipe installation.
6. Ensure that the diameter of the excavation conforms to the outside diameter of the pipe as closely as possible.
7. See Subsection 615.3.05.A, "Jacking," for the allowable variation from line and grade.
8. Use an approved mix to pressure grout voids that develop during the installation operation and that the Engineer determines are detrimental to the Work.

615.3.06 Quality Acceptance

General Provisions 101 through 150.

615.3.07 Contractor Warranty and Maintenance

General Provisions 101 through 150.

615.4 Measurement

Pipe installed by jacking or boring is measured by the linear foot (meter) of pipe complete in place. Measurement is made between the ends of the pipe along the control axis as installed.

615.4.01 Limits

General Provisions 101 through 150.

615.5 Payment

Work performed and materials furnished as prescribed by this item and measured as provided above will be paid for at the Contract Price per linear foot (meter) for jacking and boring of the pipe type, size, and class specified. Payment is full compensation for furnishing the pipe and the incidentals to complete the Item.

Excavation will not be paid for separately but will conform to Section 205 and Section 208.

Payment will be made under:

Item No. 615	Jack or bore pipe (type), (class), (size)	Per linear foot (meter)

615.5.01 Adjustments

General Provisions 101 through 150.

Section 617—Permanent Anchored Walls

617.1 General Description

This work includes furnishing materials, labor, tools, equipment, and other incidental items to design, detail, and construct an anchored wall. This Specification applies to any Contractor-proposed alternate design of Department-furnished plans.

617.1.01 Definitions

Anchor—Synonymous with the terms tie-back or tie-down.

The term Anchored Wall includes the following items:

- Anchors
- Soldier piles
- Lagging
- Facing
- Drainage

617.1.02 Related References

A. Standard Specifications

Section 500—Concrete Structures

Section 511—Reinforcement Steel

Section 853—Reinforcement and Tensioning Steel

B. Referenced Documents

General Provisions 101 through 150.

617.1.03 Submittals

A. Proof of Ability

Submit the following proof of ability (or ability of the Subcontractor) when requested by the Department to design or construct anchored walls:

- Evidence of successfully completing at least 5 Projects similar in concept and scope to the proposed wall.
- Resumes of foremen, anchor testing personnel, and drilling operators to be employed on this Project. Show the type, length, and number of ground anchors each has installed or tested within the past 5 years.
- Evidence of experience in anchor testing. Persons performing anchor testing must prove experience by performing sample tests supervised by the Engineer.

The Department is the sole judge of the qualifications of the foreman, drilling operator, and testing personnel. Do not begin wall construction until the Engineer has approved proof of ability.

B. Design Criteria for Alternate Design

If the Department receives more than 2 submittals of the Plans and calculations for review, the Contractor will be assessed $60 per hour of engineering time for reviews in excess of the 2 submittals.

C. Construction Drawings and Design Notes

If a Contractor-proposed alternate anchored wall is a part of the low bid, submit construction drawings and design notes within 28 days of the date of award of the Contract. The Design Engineer shall prepare and stamp the submission.

Include design notes and reproducible drawings in the submission concerning the following:

- Details, dimensions, and schedules of reinforcing steel, including dowels or studs for attaching the facing to the tied back wall
- Details of the anchors and soldier piling, including spacing and size of piles and spacing and angle of anchor installation
- Detailed plans for anchor proof and performance testing that show loading and measuring devices used and procedures followed

D. Wall Final Plans and Calculations

Submit final wall plans and calculations to the Department for review and approval before beginning construction on the wall The time required for Plan and calculation preparation and review will be charged to the allowable Contract time. The Department has 30 days for Plan and calculation review per Item after receiving the structure calculations and drawings.

New submittals from the Contractor showing corrections from the Department's review or changes to ease construction or to correct field errors have a 30-day review. The Department is the sole judge of information adequacy.

The Department's review and acceptance of the final Plans and construction methods does not relieve the Contractor from successfully completing the work. Time extensions are not granted for Contractor delays from untimely submissions and insufficient information.

E. Admixture Literature

Before using an admixture, submit to the Engineer the manufacturer's literature. Indicate the admixture type and the manufacturer's recommendations for mixing the admixtures with grout.

F. Structural Steel

Submit to the Engineer the mill test reports for each heat or lot of prestressing material used to fabricate tendons.

617.2 Materials

A. Concrete

Use concrete that conforms to Section 500.

B. Reinforcing Steel

Use reinforcing steel that conforms to Section 511.

C. Structural Steel

Use structural steel as follows:

1. Use prestressing bars made of continuously threaded full-length steel that conforms to ASTM Designation A 722, Type II. Do not use couplers.

   Ensure material requirements, coating application, and epoxy coating sampling and testing conform to Section 514.
2. Use full-length prestressing strands and wires according to Section 853.

D. Cement Grout

Produce cement grout using Portland cement that conforms to AASHTO M 85, Type I, II, or III, and potable water. Use cement that is fresh and free of lumps and hydration.

Follow these restrictions if using admixtures:

1. Do not use admixtures with chemicals that may harm the prestressing steel or cement.
2. Do not use expansive additives that cause air bubbles in the grout.
3. If approved by the Engineer, use admixtures that will impart low water content, flowability, and minimum bleeding in the cement grout.

E. Plastic

For corrosion protection, use polypropylene plastic that conforms to designation grade II 26500D as per ASTM D-2146. Ensure that the environmental stress crack resistance of the material prevents failures at 1,000 hours when tested by ASTM D-1693.

F. Corrosion Inhibitor

Use corrosion inhibitor (grease) that conforms to the following test requirements:

- Drop point 300 °F (149 °C) minimum by ASTM D-566
- Flash point 300 °F (149 °C) minimum by ASTM D-92
- Water content 0.1 percent maximum by ASTM D-95
- Rust grade 7 or better after 720 hours, aggressive conditions: rust grade 7 or better after 1,000 hours by ASTM B-117 and ASTM D-610

Water-soluble ions must follow these requirements:

1. Oil separation—0.5 percent by weight maximum at 160 °F (71 °C) by FIMS791B, Method 321.2
2. Soak test—5 percent salt fog at 100 °F (38 °C) 5 mils (0.13 mm) (Q panel type S). (Immerse panels in 50 percent salt solution and expose to 5 percent salt fog—no emulsification after 720 hours—by ASTM B-117 modified.)

Chlorides	10 ppm max by ASTM B-512
Nitrates	10 ppm max by ASTM D-992

Sulfates	10 ppm max by APHA427D

617.2.01 Delivery, Storage, and Handling

A. Protection Systems

Protect prestressed rock and soil anchors against corrosion by properly storing, fabricating, and handling the tendon components before inserting them into the borehole.

Avoid prolonged exposure of the tendon components to the elements, and avoid mechanical or physical damage that reduces or impairs the component's ability to resist adverse conditions during service.

Tendon components will be rejected for heavy corrosion or pitting, but not for a light coating of rust.

Use the protection systems as follows:

1. Prestressing Steel

   Protect the entire length of prestressing steel from the anchor plate to the end of the tendon from corrosion.

   a. Encase the prestressing steel in a corrugated plastic tube.

   b. Use cement grout to fill the voids between the tube and the prestressing steel and the tube and the soil. Fill the cement grout between the soil and the tube to at least 1/2 in (13 mm) thick and extend the entire length of the tendon.

   c. Provide centralizers spaced a maximum of 5 ft (1.5 m) center-to-center throughout the bond length. Do not use wood or material harmful to the tendon steel or corrugated plastic tubing as centralizers.

   d. Provide a smooth piece of plastic sheath to encapsulate the entire free length. Do not splice the sheath. Ensure that the sheath is at least 0.05 in (1.27 mm) thick.

   e. Place a grease film, compounded to lubricate and inhibit corrosion, between the sheath and the prestressing steel in the entire free length. Ensure that the plastic sheath is seamless, hot melt extruded polypropylene shrunk tightly onto the grease.

      Ensure that the sheath has a coefficient of friction with the steel of less than 0.05 and a wall thickness of at least 0.05 in. (1.27 mm).

   f. Ensure that the sheath exerts a positive pressure on the grease. Ensure that the grease film is at least 0.01 in (0.25 mm) thick. Minimize the void space between the sheath and the steel by filling visible void spaces with grease and sealing the bottom to keep the grout out.

2. Area Underneath Anchorage

   Protect the area immediately behind the stressing anchorage.

   a. Weld a pipe sleeve to the bearing plate, and seal the pipe sleeve to the anchor sheath at the other end of the sleeve.

   b. Clean the pipe sleeve to remove dirt, rust, or other harmful material before inserting the tendon into the pipe sleeve.

   c. If a seal is not provided at the lower end of the pipe sleeve, during installation and grouting fill the lower end of the pipe sleeve with grout.

      Keep the pipe sleeve free of harmful material until the upper portion of the pipe sleeve and anchor head is filled with grout.

   d. After stressing the anchors, fill the void inside the sleeve and anchor head with anti-bleed expansion grout.

3. Anchorage

   Encase the anchorage system head at each lift into a corrosion protective system before proceeding to the next lift. Install the protective system for each lift within 30 days after installing the anchors for that lift.

   Ensure that the anchorage system has a cover of at least 3 in (75 mm) once the wall face is placed.

617.3 Construction Requirements

617.3.01 Personnel

A. Contractor Qualifications

The Contractor and Subcontractor shall be experienced in designing or constructing permanently anchored walls. Provide at least one Registered Professional Engineer licensed to perform work in the State of Georgia and a supervising Engineer for the Project with at least 5 years of experience in constructing permanently anchored walls.

Furnish verification of these qualifications to the Engineer before beginning operations.

B. Design Engineer

The Design Engineer shall:

- Be registered as a Professional Engineer in the State of Georgia
- Have considerable knowledge and experience designing and constructing anchored walls
- Be available at any time during the Contract to discuss the design of the walls with the Department

C. Registered Professional Engineer

Retain the services of a second registered Professional Engineer licensed to perform work in the state of Georgia and prequalified by the Department. The Engineer shall operate independently from the Professional Engineer of Subsection 617.3.01.A, "Contractor Qualifications."

This Engineer will independently check the design calculations and Plan details for the permanent anchored walls before submitting them to the Department for review.

617.3.02 Equipment

A. Anchorage and Hardware

Use anchorage and hardware suitable for the type of anchor tendon used. Ensure that anchorage and hardware are capable of the following:

- Developing 95 percent of the guaranteed specified minimum ultimate tensile strength of the tendon, when tested in the unbonded state and without failure of the tendon
- Holding a load of prestressing steel that produces a stress of at least 95 percent of the guaranteed specified minimum ultimate tensile strength of the prestressing steel, without exceeding the anticipated set and without causing anchorage or prestressing steel failure
- Lifting-off, detensioning, or retensioning a tendon before secondary grouting to fill voids at the top of the pipe sleeve

B. Anchor Nut and Plate for Bars

Use anchor nuts and plates for bars that have complementary spherical shapes at the contact areas.

617.3.03 Preparation

Before beginning the work, survey the condition of the adjoining properties. Keep records and photograph settlement or cracking of adjacent structures that may become the subject of possible damage claims. Deliver the report to the Department before beginning work at the site.

Obtain a Foundation Investigation Report from the Geotechnical Engineering Bureau of the Department to assist in evaluating existing conditions for design and construction.

617.3.04 Fabrication

A. Tendons

Fabricate the tendons according to the approved details.

1. Keep the tendons free of dirt, rust, or other harmful substances.
2. Use a plastic sheath that is a single piece without splices.
3. Install the sheath at the fabrication shop, not in the field.
4. Before installation, handle and store the tendons so as to avoid corrosion and physical damage.

   Tendons will be rejected for damage such as abrasions, cuts, nicks, welds, weld splatters, or heavy corrosion and pitting.

   Replace the tendons at the Contractor's expense for material replacements or time delays.
5. Repair damaged coatings in the field at the Engineer's approval.

617.3.05 Construction

A. Design Criteria for Alternate Design

The design criteria for a proposed alternate or design include:

1. Design rock anchors and soil anchors according to this Specification.
2. Assume responsibility for lagging. Design the lagging with sound engineering principles.
3. Use reinforced concrete facing according to the latest AASHTO Standard Specifications for Highway Bridges, including interims.

   Ensure that the facing structural thickness is at least 12 in (300 mm). Perform architectural facing treatment as shown on the Department drawings.
4. Ensure that the concrete strength for a proposed alternate is at least 3,000 psi (20 MPa) 28-day strength. Extend the facing 2 ft (600 mm) below the gutterline or, if applicable, the ground line adjacent to the wall unless otherwise indicated on the Plans.
5. Design soldier piles for shear, bending, and axial stresses according to the latest AASHTO design criteria.

   Use steel or concrete soldier piles with a steel yield strength at least 36,000 psi (248 MPa). Ensure that the concrete has a 28-day strength of at least 3,000 psi (20 MPa).
6. Design and install permanent drainage systems behind the wall. Connect drainage systems to the nearest drop inlet using pipe or free drainage through traffic barriers or other obstructions.

   Ensure that holes through traffic barriers or facing are no higher than 3 in (75 mm) above the gutterline or ground line.
7. Have the wall design account for live load, dead load, and wind load from traffic barriers, lights, overhead signs, or other appendage on top or adjacent to the wall. Figure 1, Figure 2, and Figure 3 indicate loading conditions for soldier piles, lagging, and anchors at critical stages of construction.

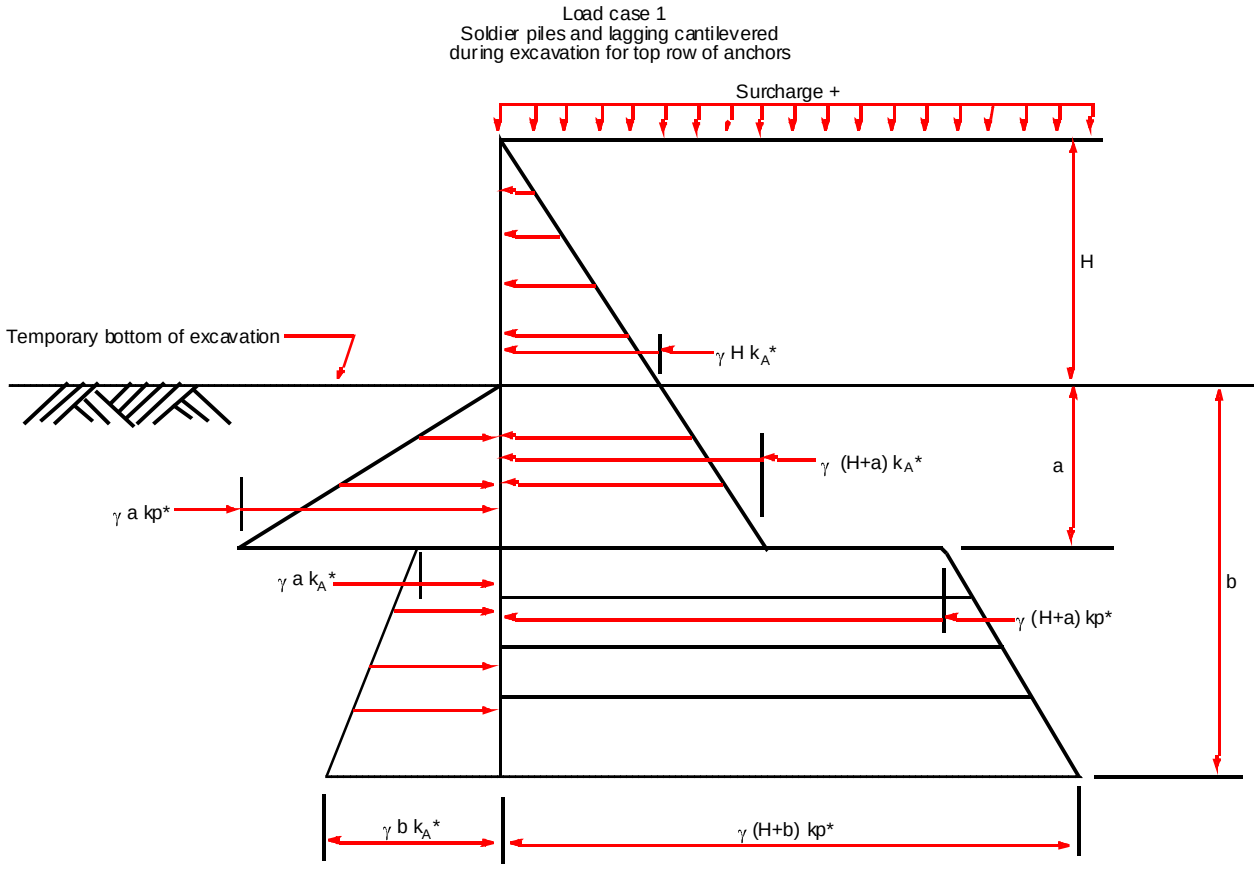

\+ Design pressure diagram shall include the effect of surcharge loading

* NOTE: The above diagrams apply for cohesionless soils. For cohesive soils the effect of cohesion may be considered.
Where lagging is in place, active earth pressure acts over the entire wall surface. Below lagging, active earth pressure acts only on the soldier pile width and passive earth pressure is generated as follows:

A) In sands and saprolitic soils (with blow counts of 10 or greater) passive pressure is generated over 3 times the soldier pile width.

B) In clays, non-saprolitic silts, and saprolitic soils (with blow counts of 10 or less) passive pressure is generated over the width of the soldier pile.

Vertical component of anchor force must be resisted by embedded length of soldier piles below assumed excavation.

γ is the soil unit weight in pounds per cubic foot.

Figure 1

Load Case II
Intermediate Excavations for Subsequent Anchor Installations

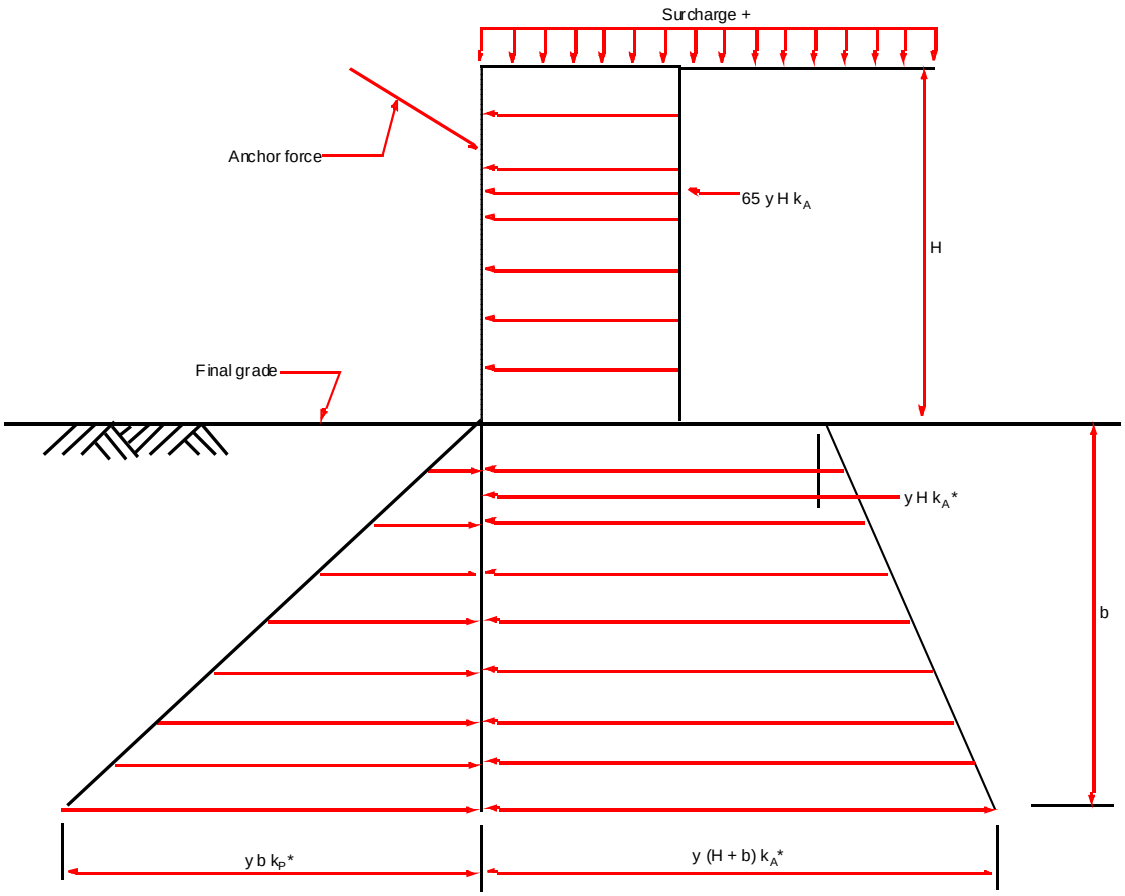

* See "NOTE" Figure 1.
\+ Design pressure diagram shall include the effect of surcharge loading.

K_A = Coefficient of active earth pressure
K_P = Coefficient of passive earth pressure
γ = Soil density

Figure 2

Load Case II
Final Constructed Condition Assuming Excavation for Drainage Facilities in front of Wall

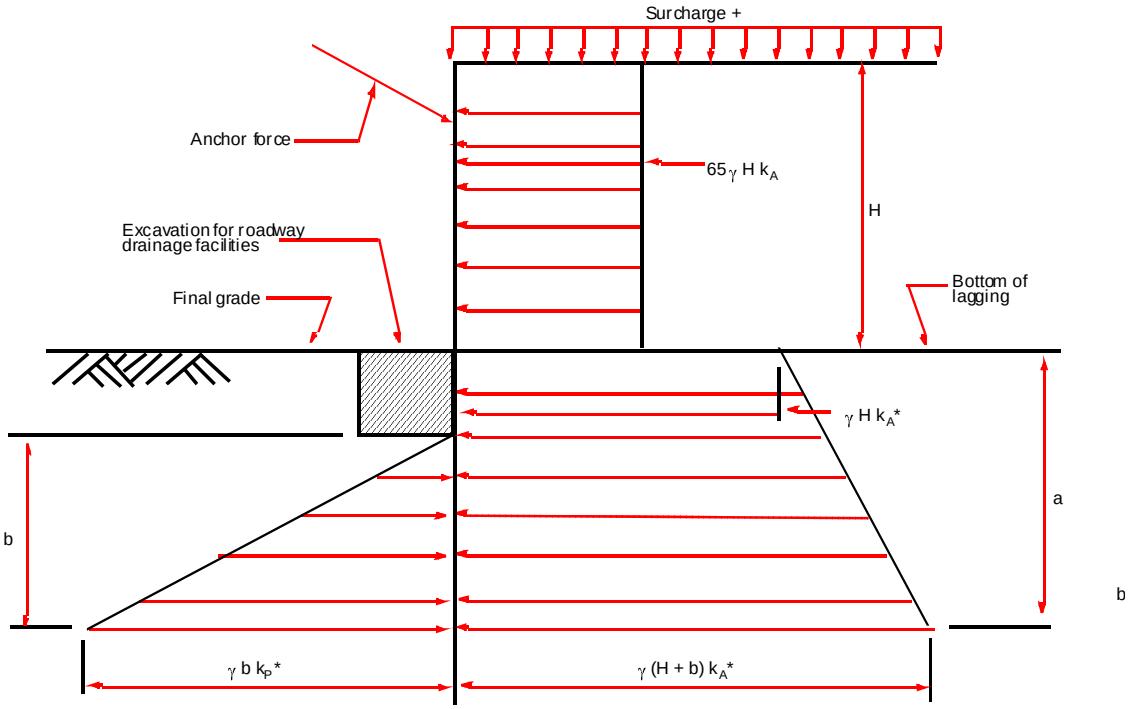

* See "NOTE" Figure 1.
\+ Design pressure diagram shall include the effect of surcharge loading.

K_A = Coefficient of active earth pressure
K_P = Coefficient of passive earth pressure
γ = Soil density

Figure 3

8. Ensure that the wall is compatible with horizontal and vertical criteria indicated on the Department Plans.
9. Include the following on the design criteria for rock anchors:
   a. Determine the tendon size to ensure that the anchor design load is no greater than 53 percent of the guaranteed ultimate tensile strength of the tendon.
   b. Ensure that the free stressing length is no less than 15 ft (4.5 m).
   c. Estimate the bond length using the following equation:

      Lb = P/(3.1416) (d) (tw)

      where

      Lb= Bond length (not less than 10 ft [3 m])

      P= Design load for the anchor

      d= Diameter of the drill hole

      tw= Bond stress in the interface between the rock and grout

      When determining the bond stress, consider the critical nature of the anchor application, rock property variations, and installation procedures.

10. Include the following in the design criteria for soil anchors:
    a. Analyze the anchor structure system to ensure a well-anchored structure.
    b. Analyze the overall earth mass stability and the assumed failure plane to ensure that the anchor bond length is started at least 5 ft (1.5 m) beyond the failure plane. Consider the following in the analysis:
        - Type of foundation, nearness, and susceptibility to movement of adjacent buildings (see Figure 4).
        - Interaction of anchor groups when the anchor center-to-center spacing is less than or equal to 6 times the bulb diameter

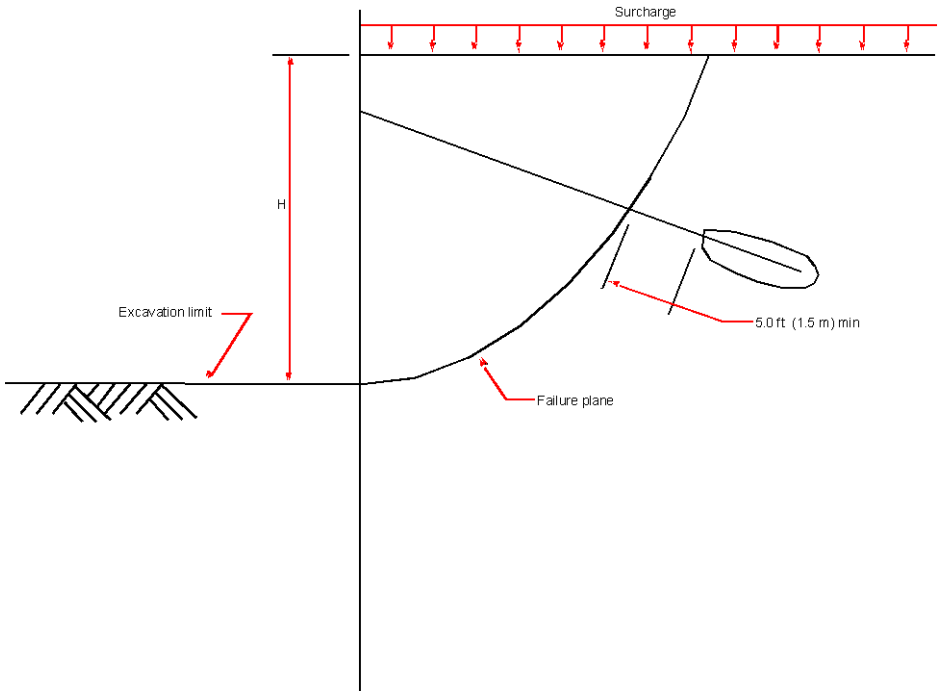

Figure 4

    c. Determine the tendon size so that the anchor design load does not exceed 53 percent of the guaranteed ultimate tensile strength of the tendon.
    d. Ensure that the free stressing length is at least 15 ft. (4.5 m).
    e. Use the existing theoretical and empirical methods only to predict anchor capacity for preliminary design estimates. Verify the final anchor capacity by field testing each anchor.
11. Retain a second registered Professional Engineer to operate independently from the Design Engineer Professional Engineer of Subsection 617.3.01.B.

    Have this Engineer independently check the design calculations and Plan details of the permanent anchored walls before submitting them to the Department for review.

B. Ground Movements and Load Transfer Instruments

The Department may install devices to monitor ground movements and load transfers during and after construction. The Department will schedule installation to minimize interference with the Contractor's operations. Cooperate with the instrumentation installers. Anticipate delays of two to four hours per instrumented anchor.

Although the Instrumentation Specialist maintains the instruments, assume responsibility for damage to the instruments, connections, or readouts from operations. Replace and install damaged equipment at the Department's approval and at the Contractor's expense.

C. Rock Anchors

1. When required on the Plan or by the Engineer, use a prestressed rock anchor made of high-strength steel tendon fitted with a stressing anchorage at one end and a way to transfer force to the grout and rock on the other end.
2. Insert the rock anchor tendon into a prepared hole of suitable length and diameter, fixed to the rock, and stressed to a specified force. The basic components of a prestressed rock anchor are as listed below:
   a. Prestressing steel may be single or multiple wires, strands, or bars. The rock anchor length is composed of these two parts:
      - Bond length (socket)—the portion of the anchor that transmits the force to the surrounding rock
      - Free length (stressing length)—the portion of the anchor free to elongate elastically during stressing
   b. The stressing anchorage is the device that permits the stressing and anchoring of the prestressing steel under load.
   c. The fixed anchorage is a mechanism opposite the stressing anchorage on the tendon that transfers the induced force to the surrounding grout or rock. Deformed bars and strand tendons do not have fixed anchorages since the anchor load is transferred to the grout by bond.
   d. Provide grout, vent pipes, and miscellaneous appurtenances to inject the anchor grout. Pump grout through the drill casing or rods.

D. Rock Anchor Installation

Install the rock anchors as follows:

1. Before installation, visit the site to observe existing conditions that may affect the work or design, if applicable, and to review the geotechnical data available for the Project.
2. Drive or drill the holes for the anchors by core drilling, rotary drilling, auger drilling, or percussion drilling. If using water in the drilling operation, dispose of the water to minimize wall erosion.

   Repair water erosion damage to the site at no cost to the Department.
3. If the hole will not stand open, install casing to maintain a clean and open hole. Ensure that the hole diameter is at least 3 in (75 mm) if no pressure grouting is used.

   Pressure grouting is grouting with a pressure greater than 60 psi (415 kPa).
4. Ensure that the drill bit diameter is not less than 1/8 in (3 mm) smaller than the specified hole diameter.
5. Start anchor holes within an angle tolerance of 1 to 3 degrees from the inclination specified on the approved design Plans. Do not allow holes to deviate from a straight line by more than 1 to 2 in. (25 to 50 mm) in 10 ft. (3 m).

   Do not allow holes to extend outside the Right-of-Way limits. Thoroughly clean holes of rock dust, rock chips, grease, or other material before inserting the tendon.
6. Install the tendon in the casing or in a hole drilled for the anchor. Ensure that the tendon's corrosion protection is not damaged during handling or installation.
7. Install the tendon in the bond length, to achieve at least 0.5 in (13 mm) of grout cover.

   Degrease the bond length of strands or wires before installing by using Acetone, MEK, or MIBK. Do not leave residue on the tendon. Use other substances only after the Department's approval. Include the costs of cleaning tendons in the price bid for Contract Items.
8. If using multi-element tendons without a fixed anchorage at the lower end, adequately space the tendon elements to achieve proper grout coverage.

NOTE: Do not use anchors to ground electric equipment and do not subject anchor tendons to sharp bends.

9. Provide centralizers spaced a maximum of 5 ft (1.5 m) center to center throughout the bond length. Do not use wood spacers or other material harmful to the tendon steel or sheathing.
10. Inject the grout at the lowest point of the anchor and place over the entire anchor length.
    a. Ensure that the grouting equipment can continuously mix and produce lump-free grout.

Equip the grout pump nozzle with a grout pressure gauge capable of measuring pressure of at least 150 psi, (10 kPa) or twice the actual pressure used.

b. Base the material proportions used in the grout on grout tests made before beginning the grouting. Or, select the proportions based on prior documented experience with similar materials and equipment under comparable field conditions.

c. Use the minimum water content necessary for proper placement and do not exceed a water-cement ratio of 0.45. Do not leave grout in the mixer longer than 45 minutes.

Only fill voids at the top of the free length with grout after final lock-off.

11. After grouting, do not disturb the tendon until the grout has reached a cube strength of 3,500 psi (25 MPa). Keep the mouth of the hole clean after grouting. Record the following data in a Project field book during the grouting operation:

- Type of mixer
- Water-cement ratio
- Type of additives
- Grout pressure
- Type cement
- Test sample strengths (before stressing)
- Volume of grout placed in bond and free lengths

12. If using pressure grouting, choose whether to perform a watertightness test. However, if injecting grout with a pressure of 60 psi (415 kPa) or less, always perform a watertightness test.

Perform the test as follows:

a. Fill the entire hole in the rock with water and subject it to a pressure of 5 psi (35 kPa) in excess of the hydrostatic head as measured at the top of the hole.

b. If after 10 minutes the leakage rate from the hole exceeds 0.001 gal per inch diameter per foot of depth per minute (12 mL per 25 mm diameter per meter of depth per minute), consolidate grout, redrill, and retest the hole. If the second watertightness test fails, repeat the entire process.

c. During the tests, observe holes adjacent to the hole being tested for watertightness to detect and seal inter-hole connections.

d. If finding artesian or flowing water in the drilled hole, maintain the pressure on the consolidation grout until the grout has initially set.

E. Cutting of Tendon Protrusions

After the Engineer accepts an anchor, the portion of the anchored tendon protruding over the anchor may be cut if it is not required for use in retesting. Cut the tendon according to the tendon manufacturer's recommendations as approved by the Engineer. Do not damage the tendon anchor.

F. Redesign

If the anchors fail during performance tests or proof tests, modify the design or construction tests and procedures. The design is subject to Department review. These modifications may include:

- Reducing the anchor design load by increasing the number of anchors
- Increasing the grout pressure
- Requiring post-grouting or increasing the bond length

Modify the design or construction procedures, install the redesigned anchors in the wall, and test as previously defined at no cost to the Department.

Anchors that fail the performance or proof tests may be incorporated in the wall. Propose a reduced design load and retest as noted above. The Department will determine acceptance of such anchors.

G. Soil Anchors

A prestressed soil anchor is a high-strength steel tendon fitted with a stressing anchor at one end and an anchor device that transfers force to the soil on the other end. These anchors are used in clay, silt, sand, or gravel and are inserted in a prepared hole that is drilled or driven into the ground.

The following are the two soil anchors considered for use:

- Friction type—rely on friction between the drilled borehole walls
- Anchor grout—rely on an enlarged pressure-grouted bulb or an underreamed bulb to provide resistance to pull-out

Test the soil anchors after placing the anchor grout and after the curing period. The basic components of the soil anchor are identical to the rock anchor as described previously.

For installation, see Subsection 617.3.05.D, “Rock Anchor Installation,” except watertightness tests are not required.

Test and stress soil anchors according to 617.3.06.A , “Anchor Testing and Stressing” except that 15% of the anchors remaining after the initial testing shall be performance tested.

H. Cutting of Tendon Protrusions

See Subsection 617.3.05.E, “Cutting of Tendon Protrusions.”

I. Redesign

See Subsection 617.3.05.F, “Redesign.”

617.3.06 Quality Acceptance

A. Anchor Testing and Stressing

Perform testing and stressing according to this subsection.

Test each anchor to ensure that the maximum test load does not exceed 80 percent of the guaranteed ultimate tensile strength of the tendon.

Performance test the first 2 anchors installed of each design load capacity and 5 to 10 percent of the remaining anchors (the Engineer will choose the locations). Proof test the remaining anchors.

1. Performance test by incrementally loading and unloading the anchor according to the following schedule.

Cycle	Load
1	AL (AL = Alignment Load)
	0.25P
	AL
2	0.25P
	0.50P
	AL
3	0.25P
	0.50P
	0.75P
	AL
4	0.25P

Cycle	Load
	0.50P
	0.75P
	1.00P
	AL
5	0.25P
	0.50P
	0.75P
	1.00P
	1.25P
	A L
6	0.25P
	0.50P
	0.75P
	1.00P
	1.25P
	1.50P (Test conditions—hold for at least 50 mins.)

2. Record the tendon movement at each increment to the nearest 0.001 in (0.025 mm) referring to an independent fixed reference point.
3. Monitor the jack load with the production gauge and load cell calibrated as a set.
4. Adjust to a transfer load of 1.0P. Actual lock-off loads may be somewhat higher to account for seating losses.
5. To prevent misalignment of testing equipment, maintain an Alignment Load (AL) of at least 0.05P.
6. Hold the load at each increment long enough to obtain the movement reading.

   Submit the loading and unloading rates (tons [megagrams] per minute) for approval. Each load must be applied in less than 30 seconds after starting the jack pump.
7. Perform the creep test by holding the 1.50P load for 50 minutes while maintaining the load constant. Record the anchor movement (total movement) referenced to a fixed point at 30 seconds, 1, 2, 3, 4, 5, 6, 10, 15, 20, 25, 30, 40, and 50 minutes.

   Begin the observation time when the jack begins to load the anchor from 1.25P to the test load.
8. If performance tests indicate that the loaded substrata is sensitive to creep, maintain the load for an additional 250 minutes and record the movements at 60, 75, 90, 100, 120, 150, 180, 210, 240, 270, and 300 minutes.
9. Have the Engineer review the performance tests to determine if the anchor is acceptable. An anchor is acceptable if:
   - The total movement obtained exceeds 80 percent of the theoretical elastic elongation of the free length and is less than the theoretical elastic elongation of the total of the free length plus 50 percent of the bond length.
   - The creep movement does not exceed 0.08 in (2.00 mm) during 5- to 50-minute time increments regardless of tendon length and load.
   - If held for an additional 250 minutes, creep movement does not exceed 0.08 in (2.00 mm) from the 30-minute to the 300-minute time increment regardless of tendon length and load.
10. Perform proof tests as follows:
    a. Incrementally load the anchor according to the following schedule:

       AL

0.25P

0.50P

0.75P

1.00P

1.25P

1.50P (Test conditions—hold for at least 10 minutes)

b. At each increment, record the movement of the tendon to the nearest 0.001 in (0.025 mm) referring to an independent fixed reference point.

c. Monitor the jack load with a production gauge that was calibrated with the load cell used for the performance test.

   If required by the Engineer, monitor the jack load with the production gauge and load cell that were calibrated as a set.

d. Adjust to a transfer load of 1.0P. Actual lock-off load may be somewhat higher to account for seating losses.

e. To prevent misalignment of testing equipment, maintain an alignment load (AL) of at least 0.05P.

f. Perform the creep test by holding the 1.50P load for 10 minutes while maintaining the load constant. Record the anchor movement (total movement) referenced to a fixed point at 30 seconds and 1, 2, 3, 4, 5, 6, and 10 minutes.

   Begin the observation time when the jack begins to load the anchor from 1.25P to the test load.

g. If the movement between the 1-minute and 10-minute readings exceed 0.040 in (1.00 mm), maintain the load for an additional 40 minutes. Record the movements at 15, 20, 25, 30, 40, and 50 minutes.

h. Have the Engineer review the proof tests to determine if the anchor is acceptable. An anchor is acceptable if:

   - The total movement obtained exceeds 80 percent of the theoretical elastic elongation of the free length and is less than the theoretical elastic elongation of the total of the free length plus 50 percent of the bond length.
   - The creep movement does not exceed 0.04 in (1.00 mm) during the 1-minute to 10-minute increment regardless of tendon length and load.
   - If held for an additional 40 minutes, creep movement does not exceed 0.08 in (2.00 mm) during the 5- to 50-minute increment regardless of tendon length and load.

11. Use the following test equipment:

    a. Use a dial gauge that can measure elongation to the nearest 0.001 in. (0.025 mm).

    b. Use a production gauge with an accuracy of at least 0.5 to 1 percent of full scale with gradation no greater than 100 psi (690 kPa). Ensure that it has a non-parallax dial.

    c. Use test gauges with an accuracy of at least 0.25 of 1 percent of full scale with gradations no greater than 50 psi (345 kPa). Ensure that they have a non-parallax dial.

    d. Use a load cell with a resolution of at least 1/10 of 1 percent constructed to eliminate inaccuracy with uneven loading.

    e. Ensure that the jack, gauges, and load cell are calibrated as a set and independently.

       Check the pressure gauge and load cell calibration every week (or when erratic results are found) against a test gauge that is kept onsite for this purpose. Have the Department's Inspector witness these calibration checks. Perform installation, testing, and stressing in the Department Inspector's presence.

12. Perform lift-off tests when using anchors. Make a lift-off reading after transferring the load to the end anchorage and before removing the jack.

    a. Determine the load within 5 percent of 1.00P. If the lift-off load is less than 0.95P, reset the end anchorage and make another lift-off reading.

    b. Perform additional lift-off tests 7 days after the load was locked-off in the anchor.

       After performing 5 additional lift-off tests, perform lift-off tests randomly. The total number of tests will be performed on no more than 10 percent of the remaining anchors.

617.3.07 Contractor Warranty and Maintenance

General Provisions 101 through 150.

617.4 Measurement

Permanently Anchored Walls are not measured separately for payment.

617.4.01 Limits

In cases where additional wall area is required due to unforeseen foundation conditions or other reasons as approved by the Engineer, or, if the wall area is decreased, measurements based on Plan dimensions will be used to adjust the Lump Sum Price Bid referenced under Payment.

617.5 Payment

Payment for this work is made per Lump Sum. Payment includes costs for concrete, reinforcing steel, excavation, backfill, lagging, piles, anchors, labor, design, and other materials and equipment. Payment also includes grouting, drilling holes, post-tensioning, performing and evaluating tests, and submitting records of tests, tools, and other items to complete the work.

Payment will be made under:

Item 617	Permanent anchored wall, wall no.___	Per lump sum

617.5.01 Adjustments

Additional wall area required because of unforeseen foundation conditions or other reasons that are approved by the Engineer, will be paid for by increasing the Lump Sum Price Bid. The increase in wall area will be multiplied by an adjustment price of $45 per square foot ($485 per square meter).

If the wall area is decreased, the Lump Sum Price Bid is adjusted proportionally to the decrease in wall area. The adjustment price is the Lump Sum Price Bid divided by the original plan area of the wall.

No additional compensation will be made for additional material, equipment, design, or other items to comply with the Project specifications as a result of the Department's review of an alternate design. If based on a redesigned wall, the bid price includes costs to comply with the requirements of this Specification.

No additional compensation will be made for subsequent changes or deviations from the approved Plan for additional material, labor, or equipment that may be required to comply with the acceptance criteria of this Specification.

Section 618—Permanent Anchored Tie-Down Wall

618.1 General Description

Specifications for this work will be included elsewhere in the Contract.

Section 619—Permanent Anchored Slurry Diaphragm Wall

619.1 General Description

Specifications for this work will be included elsewhere in the Contract.

Section 620—Temporary Barrier

620.1 General Description

This work provides for Method 1 and Method 2 temporary barrier systems.

620.1.01 Definitions

Method 1- Method of furnishing, placing, maintaining, moving, and reusing where required, and removing temporary barrier of the length and at the locations shown on the Plans. Method 1 barrier is not suitable on bridges where the distance from the centerline of the barrier to the free edge of the bridge deck is less than 6'- 0" (1.8 m) measured normal to the barrier.

Method 2- Method of furnishing, placing, maintaining, moving, and reusing where required, and removing manufactured barrier of the length, and at the locations shown on the Plans. Method 2 barrier is to be used on bridges and bridge approaches where the distance from the centerline of the barrier to the free edge of the bridge deck is less than 6'- 0" (1.8 m) measured normal to the barrier.

620.1.02 Related References

A. Standard Specifications

Section 500—Concrete Structures

Section 501—Steel Structures

Section 511—Reinforcement Steel

B. Referenced Documents

General Provisions 101 through 150

National Cooperative Highway Research Program (NCHRP) Report 350.

Manual of Assessing Safety Hardware (MASH).

620.1.03 Submittals

Method 1 - Submit certification from the manufacturer that the proposed barrier and its interconnecting hardware replicates an NCHRP-350 "Test Level 3" approved barrier, documented in an acceptance letter from FHWA or certification that the barrier meets the requirements of Ga. Std. 4961. Submit all certification documents to the engineer prior to delivery of the barrier to the project.

Method 2 - Submit certification from the manufacturer that the proposed barrier and its interconnecting hardware replicates an NCHRP-350 "Test Level 3" approved barrier, documented in an acceptance letter from FHWA and that the barrier does not deflect more than 1'- 0" (300mm) under NCHRP test conditions. Attach the acceptance letter stating that the proposed

barrier is in compliance with NCHRP-350 “Test Level 3” and that the barrier meets the deflection criteria to the certification. Submit all certification documents to the engineer prior to delivery of the barrier to the project.

620.2 Materials

A. Method 1

Supply a temporary barrier.

Ensure that materials are in accordance with the manufacturer’s recommendations, specifications, and details or that the materials meet the requirements of the Standard Specifications and Ga. Std. 4961.

B. Method 2

Supply a temporary barrier.

Ensure that materials used in the barrier are in accordance with the manufacture’s recommendations, Specifications, and details.

620.2.01 Delivery, Storage, and Handling

A. General

Deliver, store, and handle barrier in accordance with the manufacturer’s recommendations.

Repair damage to the barrier and its connections in accordance with the manufacturer’s recommendations at no additional cost to the Department prior to acceptance for use by the Department.

620.3 Construction Requirements

620.3.01 Personnel

General Provisions 101 through 150.

620.3.02 Equipment

General Provisions 101 through 150.

620.3.03 Preparation

General Provisions 101 through 150

620.3.04 Fabrication

A. Method 1

Perform barrier fabrication as detailed on Ga. Std. 4961 or in accordance with the manufacturer’s recommendations.

B. Method 2

Perform barrier fabrication in accordance with the manufacturer’s recommendations.

620.3.05 Construction

A. General

Handle and transport units to prevent damage and/or as recommended by the manufacturer. When required, use units at one or more sites on the same project.

Ensure that the units are complete and in acceptable condition and located where designated on the Plans or directed by the Engineer before acceptance by the Department.

Use the Plan quantity of barrier effectively to complete The Work within the Contract time. If scheduling The Work requires additional barrier, furnish it at no additional expense to the Department.

Use only one section shape, length, and connection type in a single run of interconnected barrier.

Interconnect all barrier sections within each single run of barrier.

B. Method 2

Rigidly attach the barrier to the bridge deck and extend it off the bridge a transition distance indicated in the Standard Plans.

Use non-shrink grout to fill all holes remaining in permanent bridge decks after barrier is removed.

620.3.06 Quality Assurance

General Provisions 101 through 150.

620.3.07 Contractor Warranty and Maintenance

General Provisions 101 through 150.

620.4 Measurement

This work will be measured per unit {per linear foot (meter)} of accepted barrier delivered and used. The quantity shall be computed by multiplying the number of units by the length of each unit as per Standard 4961 or approved alternate, subject to the maximum amount specified in Subsection 620.3.05.

620.4.01 Limits

General Provisions 101 through 150.

620.5 Payment

This work is paid for at the Contract Price per linear foot (meter) of temporary barrier Method 1or barrier Method 2 as designated complete in place. Payment includes fabrication, use, moving, reuse, and removal of the units.

No separate payment will be made for moving and/or reusing units during the work or for using additional units beyond the Plan quantity to facilitate the construction schedule.

No separate payment will be made for filling holes used to bolt Method 2 barrier to bridge decks.

The first 75 percent of the Contract Unit Price bid will be paid on the first monthly estimate following initial delivery, installation, and acceptance.

The remaining 25 percent will be paid when the Project is complete or when the material is no longer needed and removed from the Project, whichever applies.

Payment will be made under:

Item No. 620	Temporary Barrier, Method No. 1	Per linear foot (meter)
Item No. 620	Temporary Barrier, Method No. 2	Per linear foot (meter)

620.5.01 Adjustments

General Provisions 101 through 150.

Section 621—Concrete Barrier

621.1 General Description

This work includes constructing Portland Cement concrete barriers according to these Specifications and in conformance with the lines, grades, type and typical sections shown on the Plans, or established by the Engineer.

This Specification may require barriers suitable for medians or side installation on both roadways and bridges.

621.1.01 Definitions

General Provisions 101 through 150.

621.1.02 Related References

A. Standard Specifications

Section 433—Reinforced Concrete Approach Slabs

Section 500—Concrete Structures

Section 833—Joint Fillers and Sealers

Section 853—Reinforcement and Tensioning Steel

B. Referenced Documents

GDT 7

GDT 20

GDT 21

GDT 24a

GDT 24b

GDT 49

GDT 59

GDT 67

621.1.03 Submittals

General Provisions 101 through 150.

621.2 Materials

Use materials that meet the requirements of the following Specifications:

Material	Section
Portland Cement Concrete, Class A or AA	500
Steel Bars for Concrete Reinforcement	853.2.01
Joint Fillers and Sealers	833

Ensure that barrier walls and parapets on bridges are Class “AA” concrete unless otherwise specified on the Plans.

621.2.01 Delivery, Storage, and Handling

General Provisions 101 through 150.

621.3 Construction Requirements

621.3.01 Personnel

General Provisions 101 through 150.

621.3.02 Equipment

General Provisions 101 through 150.

621.3.03 Preparation

A. Subgrade Preparation

Follow these guidelines for preparing the subgrade:

1. Finish the subgrade to the required lines, grade, and cross section shown on the Plans or directed by the Engineer.
2. Compact the subgrade to 100 percent of the maximum laboratory density for the depth shown on the Plans.
3. Determine the maximum laboratory dry density from representative samples of the material being compacted using GDT 7, GDT 24a, GDT 24b, or GDT 67, whichever is applicable.
4. Use GDT 20, GDT 21, or GDT 59 to determine the in-place density of the compacted subgrade.

B. Base Preparation

Follow these requirements for preparing the base:

1. Place the base as shown on the Plans, and compact it to 100 percent of the maximum laboratory dry density.
2. Use GDT 49 to determine the maximum laboratory dry density from representative samples of the material being compacted. Use GDT 21 or GDT 59 to test in-place density of the base.

621.3.04 Fabrication

General Provisions 101 through 150.

621.3.05 Construction

A. Formed or Slip Formed Barrier

Ensure that the barriers are Class A concrete as defined in Section 500, and are constructed according to Plan details.

1. Place the concrete using conventional forms or an approved self-propelled extrusion machine. When using forms, give the barrier a Type III finish, and cured according to Section 500.
2. Construct joints of the type and at the locations specified on the Plans.
   a. When emergencies interrupt placement, the Engineer will decide whether to allow a construction joint and will direct where and how to construct the joint.
   b. Joints may be sawed or formed. If the joint is sawed within 24 hours of placement to at least 3 in (75 mm) deep using a template, immediately remove the following material:
      - Material that may damage the adjacent concrete by blocking the sawed joint
      - Material that may prevent later operation or cleaning after the sawing operation is complete
   c. Saw the joints through the footing.
3. The outside vertical face of the side barrier or parapet may be battered as directed by the Engineer. Radii, as approved by the Engineer, may be used at intersecting surfaces of the barrier.

   Make approved requested changes at no cost to the Department.

B. Slip-Formed Barriers

When placing barriers using slip-form methods, follow these requirements:

1. To place barriers, use extrusion machines designed to place concrete barrier or parapet without using forms.

Extrusion machines may be either crawler or rubber tired.

2. Conform the barrier or parapet to the established shape, line, grade, and dimensions shown on the Plans.
3. Obtain the proper density and cross section by forcing an approved concrete mix through a mold of the proper cross section.
4. Ensure that the extrusion machine consolidates the freshly placed concrete in one complete pass and that internal vibrators can consolidate the concrete along the faces of the forms and adjacent to joints.

   Perform this work to minimize hand finishing and to produce a dense and homogenous barrier free from voids and honeycomb.

C. Finish

Use a steel trowel to repair or correct the concrete surface. Do not overfinish the surface. Keep hand finishing to a minimum.

Correct the exposed surfaces that are not satisfactory to the Engineer in color, texture, smoothness, or patching.

D. Curing

Cure as specified in Subsection 500.3.05.Z, "Cure Concrete," and as follows if an approved membrane-forming curing compound is used.

1. Use a Type 1, Class B curing compound.
2. Uniformly spray the concrete surface with curing compound immediately after obtaining the surface finish.

   Applying protective surface treatment to the barrier or parapet surfaces is not required.

621.3.06 Quality Acceptance

General Provisions 101 through 150.

621.3.07 Contractor Warranty and Maintenance

General Provisions 101 through 150.

621.4 Measurement

The barrier is measured for payment in linear feet (meters) of each accepted type shown on the Plans. The barrier is measured along the top of the various types.

Side barriers are measured for payment in linear feet (meters) of each accepted type shown on the Plans. The barrier is measured along the top of the various types.

Barriers on bridges are measured separately for payment, as defined in Subsection 500.4.01.C.

Barriers placed on approach slabs are measured for payment as defined in Section 433.

621.4.01 Limits

General Provisions 101 through 150.

621.5 Payment

This work, measured as specified above, will be paid for at the Contract Unit Price per linear foot (meter) for each barrier type. Payment is full compensation for providing materials, forms, and equipment; preparing subgrade and base; and providing labor, incidentals, and direction to complete the work.

Payment will be made under:

Item No. 621	Concrete barrier, ("type")	Per linear foot (meters)
Item No. 621	Concrete side barrier, ("type")	Per linear foot (meters)

621.5.01 Adjustments

General Provisions 101 through 150.

Section 623—Pneumatically Applied Concrete

623.1 General Description

This item includes manufacturing and pneumatically placing concrete at locations and to the dimensions shown on the Plans. Follow the requirements of Section 441 and Section 500 for this work.

623.1.01 Definitions

General Provisions 101 through 150.

623.1.02 Related References

A. Standard Specifications

Section 441—Miscellaneous Concrete

Section 500—Concrete Structures

Section 800—Coarse Aggregate

Section 801—Fine Aggregate

Section 830—Portland Cement

Section 832—Curing Agents

Section 833—Joint Fillers and Sealers

Section 853—Reinforcement and Tensioning Steel

Section 880—Water

B. Referenced Documents

General Provisions 101 through 150.

QPL 10

623.1.03 Submittals

General Provisions 101 through 150.

623.2 Materials

Use materials that meet the requirements of these Specifications:

Material	Section
Coarse Aggregate: Class A or B Stone	800
Portland cement	830
Fine Aggregate, Size No. 10	801
Water	880
Preformed Joint Filler	833.2.01

Hot Poured Joint Filler	833.2.02
Elastomeric Polymer Type Joint Compound	833.2.03
Welded Steel Wire for Concrete Reinforcement	853.2.07
Curing Agents	832
Silicone Joint Sealer	833.2.06

623.2.01 Delivery, Storage, and Handling

General Provisions 101 through 150.

623.3 Construction Requirements

623.3.01 Personnel

Have qualified machine, nozzle, and re-bound operators prepare and apply pneumatically applied concrete under the supervision of qualified superintendents.

Furnish documentation of personnel qualifications upon request.

623.3.02 Equipment

Use equipment in good operating condition to work on the Project. Have all necessary equipment on the Project prior to beginning application.

623.3.03 Preparation

A. Earth Foundation

Prepare earth foundations for application as follows:

1. Thoroughly compact and finish the area upon which the pneumatically applied concrete will be placed to the lines and grades shown on the Plans.
2. Ensure that the foundation contains enough moisture to provide maximum density and to avoid absorbing water from the concrete. Ensure that the foundation does not contain free surface water.

B. Bonding Foundation

When bonding pneumatically applied concrete to a previously placed structure, ensure that the surface is rough and clean.

1. Remove unsound or deteriorated concrete, loose particles, dust, and dirt.
2. Thoroughly clean steel members by sand blasting loose rust, scale, or other deleterious material that would prevent or lessen the bond between concrete and steel.
3. Keep the bonding surface wet for at least one hour before applying the concrete. Remove any free water immediately before placing.

623.3.04 Fabrication

General Provisions 101 through 150.

623.3.05 Construction

A. Earth Foundation

1. Use gauging wires to establish finish grade lines, surface planes, and the Plan thickness.
2. Place joints, side forms, shooting strips, weep holes, and reinforcement according to Plan details.

B. Bonding Foundation

1. Reinforce and form concrete according to Plan details.

2. When sloping, vertical, or overhanging work surfaces require successive layers or thicknesses, allow enough time between application of layers to permit an initial but not a final set.

   When the initial set is developing, clean the surface to remove laitance and to ensure bonding.

C. Placing Reinforcement

Place reinforcement, if required, as shown on the Plans.

1. When dowels or anchor bolts are specified, securely fasten the reinforcing steel to them.
2. Lap the welded wire fabric at least 4 in (100 mm) and firmly tie the full area of mesh or fabric in position with wire ties.
3. Place welded wire fabric around the top of slab-carrying beams and girders before pouring the slab and extend at least 5 in (125 mm) below the slab. Locate the fabric to properly lap the web reinforcement.
4. Place the reinforcement at least 0.5 in (15 mm) from the surface on which the concrete is to be placed.

   Ensure that there is at least 0.75 in (20 mm) from the outside surface of the reinforcing to the finished surface of the concrete.

D. Composition

Use pneumatically applied concrete composed of one part Portland cement to three parts fine aggregate by volume. Thoroughly mix the dry ingredients before placing them into the applicator hopper. The Contractor may submit mix design proportions for approval from an approved producer (QPL 10) who has the capability of producing transit-mixed concrete.

1. Substitute a maximum of 30 percent by volume of No. 9 stone for an equivalent amount of fine aggregate when approved by the Engineer.
2. Discard material not used within one hour after combining cement and aggregates. Do not remix or temper the material.

E. Transporting and Placing

When premixing the materials and transporting them to the job site, follow the applicable requirements of Section 500 and these guidelines:

1. Do not place pneumatically applied concrete under these conditions:
   - The ambient temperature is below 40 °F (4 °C).
   - The subgrade is frozen.
   - Wind velocity prevents homogenous and uniform application.
2. Place the approved mix by pneumatic pressure through a machine with the proper amount of water for hydration applied at the mixing nozzle.
3. Maintain water pressure in the delivery pipe approximately 20 psi (140 kPa) above the air pressure in the machine.
4. Maintain a constant pressure of at least 45 psi (310 kPa) in the placing machine when the applicator hose length is 100 ft (30 m) or less.

   Increase the pressure at least 5 psi (35 kPa) for each additional 50 ft (15 m) of hose length or fraction thereof, or for each 25 ft (7.5 m) vertically that the nozzle is above the machine.
5. When placing concrete on slopes pneumatically, limit the height to 8 ft (2.5 m) lifts measured along the slope.
6. Direct the applicator nozzle to minimize rebound. Maintain the nozzle velocity at a constant level and rate determined by the job conditions.

F. Finishing

After placing the concrete to the required depth and before the initial set, screed the surface and check it with a 10 ft (3 m) straightedge. Immediately correct irregularities in excess of 0.25 in. in 10 ft. (6 mm in 3 m).

Remove and replace loose areas of pneumatically applied concrete at the Contractor's expense. Before application, protect the adjacent areas not to be covered and clean after application if necessary.

G. Curing

Cure pneumatically applied concrete according to the applicable requirements of Subsection 500.3.05.Z.1, "General Curing—Supplying Additional Moisture."

H. Joints

Construct joints at locations indicated on the Plans and as specified in Section 441.

Slope construction joints to a clean edge of approximately 45 degrees. Before resuming the placing, clean and moisten the joint.

623.3.06 Quality Acceptance

General Provisions 101 through 150.

623.3.07 Contractor Warranty and Maintenance

General Provisions 101 through 150.

623.4 Measurement

Pneumatically applied concrete placed on slopes or plane areas are measured for payment by the square yard (meter) of accepted surface areas constructed to the neat lines indicated on the Plans or as directed.

Where pneumatically applied concrete is used for patching, grouting, plastering, or build-ups, it is measured by the ton (megagram) of cement actually used.

623.4.01 Limits

General Provisions 101 through 150.

623.5 Payment

Pneumatically applied concrete will be paid for at the Contract Price per square yard (meter) of paving or per ton (megagram) of cement as specified, complete in place. No separate payment will be made for reinforcing steel, joint-filling materials, clean-up, or disposal of rebound.

Payment will be made under:

Item No. 623	Pneumatically applied concrete	Per square yard (meter)
Item No. 623	Pneumatically applied concrete	Per ton (megagram) of cement

623.5.01 Adjustments

General Provisions 101 through 150.

Section 624—Sound Barriers

624.1 General Description

This work includes furnishing and installing a sound barrier according to this Specification and conforming to the locations, dimensions, lines, and grades shown on the Plans.

Unless a specific type is required by the Contract documents, select one of the following barrier types.

Type B	Interlock steel panels
Type C	Precast concrete panels

Type D	Treated timber panels
Type F	Glass reinforced thermoset composite structural panels
Type G	Precast autoclaved aerated concrete (PAAC) panels

624.1.01 Definitions

General Provisions 101 through 150.

624.1.02 Related References

A. Standard Specifications

Section 106—Control of Materials

Section 201—Clearing and Grubbing Right-of-Way

Section 205—Roadway Excavation

Section 206—Borrow Excavation

Section 208—Embankments

Section 210—Grading Complete

Section 500—Concrete Structures

Section 520—Piling

Section 700—Grassing

Section 702—Vine, Shrub, and Tree Planting

Section 865—Manufacturing of Prestressed Concrete Bridge Members

Section 885—Elastomeric Bearing Pads

B. Referenced Documents

GDT 7
GDT 20
GDT 21
GDT 24a
GDT 24b
GDT 59
GDT 67
QPL 42
QPL 53
Federal Specification QQ-S-763-C

AASHTO	ASTM		
M 31/M 31M	A 153/153M	C 1386	D 2092
M 32/M 32M	A 653/653M	D 638	D 2583
M 111/M 111M	A 792/792M	D 695	E 90
M 270/M 270M	B 695	D 790	G 154
	B 766	D 792	

624.1.03 Submittals

Submit Shop Drawings to the Engineer for review and approval.

Prepare Shop Drawings for each Sound Barrier.

Show all details necessary for field erection. The minimum requirements are:

- Complete elevation view showing the top and bottom elevations, the required wall envelope, the roadway grade and ground line at the wall.
- Diameter and depth of caissons at each post
- Post size
- Complete plan view with dimensions, stations and offset

Have the manufacturer certify to the Department that a specimen of the proposed barrier meets or exceeds a minimum weighted sound transmission loss of 20 dBA. Furnish test results for barrier material types (except Type C). The transmission or loss results must be based on the generalized truck spectrum when tested according to ASTM E 90.

624.2 Materials

Ensure that other materials not listed herein meet the requirements of the appropriate Specification to which they pertain.

A. Type B

1. Interlocking Steel Panels

   Use cold formed configured steel panels that meet these requirements:

   - Use steel sheet conforming to ASTM A 653/653M or ASTM A 792/792M Structural Steel (SS) Grade 50 Class 2 with a minimum thickness of 0.029 inches (0.74 mm)
   - Provides friction interlocking with adjacent panels
   - Has a male-female rib that provides a friction interlock connection with adjacent panels or is joined adequately according to the manufacturer's specifications
   - Provides sufficient friction interlock connection strength to support its own weight without using fasteners when connected to another panel and held in a vertical or horizontal position

   Use a panel size and shape shown on the Plans or an alternate approved by the Engineer.

   Coat (galvanize) the panels with either a G90 (Z275) weight of zinc according to ASTM A 653/653M or an AZ50 (AZM150) weight of 55% aluminum-zinc alloy according to ASTM A 792/792M.

2. Protective Color Coating

   Use one of the following coatings:

   a. System A—The coating is polyvinylidene fluoride (70 percent resin, minimum enamel, PVF2).
      1) Apply the coating system (including primer) at a total minimum film thickness of 1 mil (0.03 mm) per coated side.
      2) Cure the polyvinylidene fluoride film to at least 0.8 mil (0.02 mm) film thickness.

   b. System B—The coating is polyvinyl fluoride plastic film (PVF1) and has a thickness of at least 1.5 mils (0.04 mm) coated on both sides.
      1) Have the coating applied at the factory to thoroughly cleaned and pretreated galvanized steel according to ASTM D 2092, Method F.
      2) Laminate the coating to the galvanized steel using heat and adhesive to form a uniform and durable coating pigmented to obtain optimum color performance.
      3) Use a color from the Federal Standard Color Number indicated on the Plans. Ensure that caulking is color pigmented to match the wall color specified.

3. Post

   Use a post for steel walls with these features:

- Hot rolled shape conforming to AASHTO M 270/M 270M GR 36/GR 250
- Hot-dip galvanized by an approved galvanizer as listed on QPL-53 and in accordance with AASHTO M 111/M 111M
- Coating that weighs at least 2 ounces/ft^2 (610 g/m²) on all sides
- Each post requires pre-inspection by the Office of Materials & Research as evidenced by a GDT stamp affixed near one end of each post

4. Steel Flashing and Caps

   Use flashing and caps for steel walls that are the same material and color coating as the panels. Fasten steel flashing and caps with self-tapping screws. Ensure that A-1 screws are Class #410 Stainless Steel and conform to Federal Specification QQ-S-763-C, or are cadmium coated according to ASTM B 766.

5. Fasteners

   Attach panels to posts using a powder-actuated fastening system. Fasteners shall be stainless steel or shall be hot-dip galvanized as per ASTM A 153 Class C or shall have a mechanically deposited zinc coating as per ASTM B 695 Class 50.

B. Type C

Use precast concrete panels that meet these requirements:

Class AA Concrete	Section 500
Reinforcing	AASHTO M 31/M 31M and M 32/M 32M
Piling-Galvanized Steel	Section 520 and AASHTO M 111/M 111M
Elastomeric Bearing Pads	Section 885

Use piling, bolts, and fittings that are hot-dip galvanized when the barrier rests on another concrete structure.

C. Type D

Use treated timber panels that meet these requirements:

Type D.1	See Plan Detail D-1
Type D.2	See Plan Detail D-2
Class A Concrete	Section 500
Bolts and Washers	Plan Details
Pile	Plan Details

D. Type F

1. Structural Plank. Use continuous glass fiber reinforced structural planks that meet these requirements:
   - Are constructed of a durable, UV resistant, flame retardant, thermosetting composite material
   - Are resistant to degradation from ozone, hydrocarbons, and freeze/thaw cycling
   - Match the Federal Standard Color Number indicated on the Plans
   - Meet the following minimum mechanical properties:

PROPERTY	MINIMUM VALUE	TEST METHOD
Flexural Modulus	2,200,000 psi (15 200 MPa)	ASTM D 790
Flexural Strength	70,000 psi (480 MPa)	ASTM D 790
Tensile Strength	65,000 psi (450 MPa)	ASTM D 638

Tensile Modulus	4,500,000 psi (31 000 MPa)	ASTM D 638
Elongation	1.5 %	ASTM D 638
Compressive Strength	60,000 psi (410 MPa)	ASTM D 695
Barcol Hardness	50	ASTM D 2583
Specific Gravity	1.86	ASTM D 792

2. Filler. Use either hollow structural planks or planks filled with a recycled tire rubber compound comprised of sorted and graded ground tire rubber (0.25 $\pm$ 0.025 inch (6.4 $\pm$ 0.6 mm)).
3. Flashing and Caps. Use flashing and caps of the same material and color as the panels.
4. Caulking. Use caulking that is color pigmented to match the wall color specified.
5. Posts. Use posts fabricated from hot rolled sheet conforming to ASTM A 36 (A 36 M), and hot dip galvanized in accordance with ASTM A 123/A123M, except coating weight shall be a minimum of 2.0 oz/ft^2 (600 g/m^2) on all sides.
6. Other Materials. Use materials that meet the requirements of the appropriate Section in the Standard Specifications to which they pertain.

E. Type G

1. Precast Autoclaved Aerated Concrete (PAAC) Wall Units. Use PAAC wall units cast from a mixture of Portland cement, fine aggregate, water, gypsum, lime, and an expansion agent. After setting, and before hardening, the PAAC is machine cut to the required size, then steam-cured under pressure in an autoclave. Use PAAC that meets the following physical requirements:
   - Has a minimum average compressive strength of 725 psi (5000 kPa) when three specimens are tested in accordance with ASTM C 1386, with no single specimen having a compressive strength of less than 580 psi (4000 kPa).
   - Has a maximum shrinkage of 0.02% when tested in accordance with ASTM C 1386
   - Has a dry bulk density between 34 (544 kg/m^3) and 41 lb/ft^3 (656 kg/m^3)when tested in accordance with ASTM C 1386
2. Reinforcing. Use reinforcing that conforms to AASHTO M31 or M32.
3. Galvanized Steel Supports. Use supports that conform to Drawing No. H2 as shown on the Plans, with the distance between wall supports no greater than 10 feet (3 meters) on center.
4. Welds. Use welds conforming to Drawing No. H2.1 as shown on the Plans.
5. Coatings. Use only approved coating systems on all exposed surfaces, including steel supports. Use the same topcoat color on both the PAAC panels and the steel supports. Submit independent laboratory test results for 1500 hours of accelerated weathering in accordance with ASTM G 53. Submit results that show ratings of at least 9 in the following categories: color change, chalking, checking, cracking, blistering, flaking and rusting. Submit a certification stating that the PAAC topcoat is graffiti resistant.

624.2.01 Delivery, Storage, and Handling

General Provisions 101 through 150.

624.3 Construction Requirements

624.3.01 Personnel

General Provisions 101 through 150.

624.3.02 Equipment

General Provisions 101 through 150.

624.3.03 Preparation

General Provisions 101 through 150.

624.3.04 Fabrication

General Provisions 101 through 150.

624.3.05 Construction

Perform the following work according to the Specifications:

A. Clearing and Grubbing

When necessary, clear and grub according to Section 201 as applicable.

B. Excavation, Borrow, Embankment

Perform excavation, borrow, and embankment according to Section 205,
Section 206, Section 208, or Section 210. The scope and dimensions of the work are shown on the Plans.

C. Grassing

Perform grassing according to Section 700, as specified on the Plans.

D. Vine, Shrub, and Tree Planting

Plant vine, shrub, and trees according to Section 702 as specified on the Plans.

E. Miscellaneous Construction Items

When items are shown on the Plans but are not covered in this Specification, the Plans and Standard Specifications govern the work.

F. Walls

Follow these requirements to construct each type of wall:

1. Type B Wall

   Install steel noise barrier walls according to the manufacturer's recommendations and Plan details.

   Repair cut, scratched, or marred surfaces according to the manufacturer's recommendations.

2. Type C Wall

   When using precast concrete panels:

   a. Cast them in a precasting facility approved by the Engineer.

   b. Have the Engineer determine panel acceptability from the compressive strength of cylinders made and cured the same as the panels, and from inspection during manufacture.

      Have the panel manufacturer furnish facilities and assistance to sample and test quickly and satisfactorily.

   c. Cast the panels on a steel surface with steel side forms.

   d. Place concrete in each panel without interruption. Consolidate the concrete using vibrators supplemented by hand tamping and rodding to force the concrete into the corners of the forms to eliminate stone pockets, cleavage planes, and air bubbles.

   e. Give the panels a Type III—Rubbed Finish on the upper surface (as cast) according to Subsection 500.3.05.AB, "Finish Concrete." When an architectural finish is specified for one side of the barrier, provide a similar finish to the opposite side unless noted otherwise in the plans.

   f. Cure the panels as specified in Subsection 500.3.05.Z.1, "General Curing—Supplying Additional Moisture," (wet cure) long enough for the concrete to develop the specified compressive strength.

1) Ensure that the curing period is at least 72 hours under normal summer temperature conditions. In colder weather extend the curing period, as directed by the Engineer
2) Protect the panels from freezing from the time the concrete is placed until curing is complete.
3) Instead of the wet cure method, steam cure the panels as specified in Subsection 865.2.01.B.2.g.(2) if desired.

g. Mark each panel with the date cast and the Inspector's approval stamp.

NOTE: Even with the Inspector's acceptance at the precast yard, panels can still be rejected at the erection point if they are damaged.

h. Erect the panels according to Plan details and dimensions.

Place bearing pads as shown in the Plans, and tighten the restraining bolts.

i. After erection is complete and before Final Acceptance of the Project, clean the sound barrier to remove dirt or stains.

3. Type D Wall

The Plans shall designate the correct type of D wall (Type D.1 or Type D.2.).

a. Type D.1 Wall

Construct this wall of tongue and groove panels placed in a horizontal configuration supported by vertical posts set on concrete piers. Follow the Plan details for information on sizes, timber treatment, and erection.

b. Type D.2 Wall

Construct this wall of double wood panels staggered to provide a 1/2-width overlap. The supports are posts set in a concrete footing. Follow the Plans for full details of materials and erection, sizes, and timber treatment.

4. Type F Wall

Install in accordance with manufacturer's recommendations and Plan details. Do not install walls with burns, discolorations, cracks, or other objectionable marks that would adversely affect the performance of the system.

5. Type G Wall

a. Cast the PAAC panels in a precasting facility approved by the Engineer.

b. Have the Engineer determine panel acceptability from the compressive strength of cylinders made and cured the same as the panels, and from inspection during manufacture.

Have the panel manufacturer furnish facilities and assistance to sample and test quickly and satisfactorily.

c. Cast the panels on a steel surface with steel side forms. When an architectural finish is specified for one side of the barrier, provide a similar finish to the opposite side unless noted otherwise in the plans.

d. Place concrete in each panel without interruption. Consolidate the concrete using vibrators supplemented by hand tamping and rodding to force the concrete into the corners of the forms to eliminate stone pockets, cleavage planes, and air bubbles.

e. After machine cutting to the required size, cure the PAAC units by high-pressure steam autoclaving so that the units meet the physical requirements of Subsection 624.2.G.1.

f. Mark each panel with the date cast and the Inspector's approval stamp.

NOTE: Even with the Inspector's acceptance at the precast yard, panels can still be rejected at the erection point if they are damaged.

g. Erect the panels according to Plan details and dimensions.

h. After erection is complete and before Final Acceptance of the Project, clean the sound barrier to remove dirt or stains.

i. Use coatings that are approved by the Laboratory.

1) PAAC panels. Apply the coating with a sponge-textured roller in accordance with the manufacturer's recommendations. Cover all exposed galvanized steel surfaces for protection from splattering. Apply the

coating at a minimum thickness of 60 dry mils (1.5 mm). Apply the coating only when the ambient temperature is greater than 40 °F (4 °C) and rising. Do not apply any coating during rainfall or when rainfall is forecast overnight.

2) Galvanized Steel Supports. Apply a corrosion resistant coating by brush, roller, or airless spray in accordance with the manufacturer's recommendations. Protect the adjacent PAAC surfaces from overspray. Apply the coating at a minimum thickness of 2 dry mils (0.5 mm). Use a color that matches the PAAC final topcoat color. Apply the coating only when the ambient temperature and relative humidity fall within the limits stated by the manufacturer.

6. All Walls

Before beginning earthwork on the Project, stake the noise barriers in the field and establish the final groundline elevations at the barrier walls.

Furnish these elevations to the supplier who will develop the shop plans, including a complete elevation view of each barrier indicating top and bottom elevations and the roadway grade.

a. Protect the final ground elevations established in the field for the duration of the Project. Do not adjust them without the Engineer's approval.

b. Install sound barriers according to the Plans and Shop Drawings approved by the Engineer.

c. Secure joints and connections to be structurally sound with no visible openings for sound transmission. Ensure that vibration from metal barriers is not a secondary source of noise transmission.

d. Repair marred, chipped, scratched, or spalled barrier areas according to the manufacturer's recommendations and as directed by the Engineer at the Contractor's expense.

e. To substitute welded for fixed-bolt connections or vice versa on metal barriers, meet these conditions:

- Submit load calculations for the specific connection to be modified.
- Use a safety factor of at least 3.0.

f. Place trench backfill for sound barrier construction according to Section 207. Use select material to backfill.

If the Engineer believes the trench is too narrow for compaction, backfill the trench excavation with concrete grout to the Engineer's satisfaction. No additional compensation will be made for the concrete grout.

g. Dispose of excess excavation to the Engineer's satisfaction.

h. Keep right-of-way fence in place that is scheduled to be salvaged until the barrier is constructed, or as long as the Engineer deems practical.

i. After erecting the barrier, leave the disturbed area in a finished condition at the Engineer's direction and plant grass or sod.

j. Payment for establishing grass is described in Subsection 624.4.C, "Grassing."

k. Ensure that the barrier meets these tolerances:

1) Vertical alignment for barriers and posts is:

- 0.5 in (15 mm) for barrier heights to 10 ft (3 m)
- 1 in (25 mm) for barrier heights to 20 ft (6 m)
- 1.5 in (40 mm) for barrier heights to 30 ft (9 m)

2) Horizontal alignment for barriers is close to that shown on roadway Plans.

3) Post spacings are within 0.5 in (15 mm) of their intended location.

l. For sound barriers built on top of earth berms, construct the berms of earthwork fill material and compact to 95% of the maximum density as determined by GDT 7, GDT 24a, GDT 24b or GDT 67, as applicable. Determine in-place density according to GDT 20, GDT 21, or GDT 59, as applicable.

G. Graffiti-Proof Coating

This work includes providing graffiti-proof coating on both faces of concrete and masonry barriers from the ground line to the top of the wall.

1. Materials. Use materials as noted on QPL 42.

2. Delivery and Storage. Ensure that the materials are delivered in manufacturer's original containers with labels intact. Store the materials out of the weather, in a single location, and as specified by the manufacturer.
3. Job Conditions. Protect the coating from the weather and work conditions as follows:
   a. Apply the graffiti-proof coating in weather recommended by the manufacturer.
   b. Mask, cover, or otherwise protect finished adjacent surfaces from damage that work in this Section could cause.
   c. Protect finished coatings from staining, marring, and damages from other trades.
4. Quality Criteria. Use materials that are products of one manufacturer.

   Use application equipment recommended or approved by the coating manufacturer for use on this Project. Use equipment in good operating condition.
5. Application. Ensure that the moisture content of surfaces to receive coating are within the limits recommended by the coating manufacturer.
   a. Apply coating after applying a Type III finish of concrete, or after thoroughly cleaning the concrete block.
   b. Apply coating at rate of 1 gal per 250 to 300 ft^2 (1 L per 6 to 7 m^2). Apply three coats using a low-pressure spray.
   c. Begin the coating application at the uppermost surfaces and work down.
   d. Remove loose particles, dirt, grease, oil, and other foreign materials following application.

624.3.06 Quality Acceptance

The panels are subject to rejection if they fail to meet the requirements specified above. The following defects are also cause for rejection:

Defects from imperfect mixing and casting

Honeycombed or open texture

Exposed reinforcement

Failure to meet the required 3,500 psi (25 MPa) compressive strength at 28 days

624.3.07 Contractor Warranty and Maintenance

General Provisions 101 through 150.

624.4 Measurement

A. Clearing and Grubbing

Clearing and grubbing will not be measured separately for payment.

B. Excavation, Borrow, and Embankment

Excavation, borrow, and embankment are measured according to Section 205, Section 206, Section 208, or Section 210, as applicable.

The scope and dimensions of the work are as shown on the Plans.

C. Grassing

Grassing is not measured separately for payment unless shown on the Plans as a payment item. In this case, the work is measured according to the requirements of Section 700 for the type of grassing required.

D. Vine, Shrub, and Tree Planting

Vine, shrub, and tree planting shown on the Plans is measured according to Section 702.

E. Items Not Covered in This Specification

Items shown on the Plans but not covered in this Specification are measured for payment according to the applicable portions of the Specifications.

F. Walls

1. Type B Wall

   Steel wall is measured in square feet (meters) of wall surface installed before backfilling complete in place according to Subsection 109.01, “Measurement and Quantities.” Posts, flashing, caps, concrete post embedment, or other incidental items required for construction are not measured separately.

2. Type C Wall

   Precast concrete sound barriers are measured in square feet (meters) of wall surface before backfilling, including pile flanges, complete in place and accepted.

   No separate measurement is made for pile, anchor bolts, plates, connections, neoprene bearing pads, connecting bolts, or other sound barrier components.

3. Type D Wall

   Treated timber walls are measured in square feet (meters) of wall surface installed before backfilling.

   No separate measurement is made for posts, caps, foundations, footings, hardware, timber treatment, pile, or cover boards.

4. Type F Wall

   Glass reinforced thermoset composite structural panel walls are measured in square feet (meters) of wall surface installed before backfilling.

   No separate measurement is made for posts, top caps, bottom caps, side caps, flashing, strip seals, mounting brackets and hardware, concrete post embedment, or other incidental items required for construction.

5. Type G Wall

   Precast autoclaved aerated concrete walls are measured in square feet (meters) of wall surface installed before backfilling.

   No separate measurement is made for steel supports or other incidental items required for construction.

6. All Walls

   Only authorized changes required to adjust plan ground elevations and other authorized changes will be measured. Payment will be made based on plan quantity unless changes are authorized.

624.4.01 Limits

General Provisions 101 through 150.

624.5 Payment

A. Clearing and Grubbing

The cost of clearing and grubbing is included in the Lump Sum Item for the Project. When clearing and grubbing is not shown as a payment Item, the cost is included in the overall Contract Price for the work covered in this Specification.

B. Unclassified Excavation and Borrow

Unclassified excavation and borrow will be paid for and included in the normal excavation and borrow for the Project unless shown on the Plans as a separate payment Item for sound barriers. In that case, payment will be made under Section 205, Section 206, Section 208, or Section 210, as applicable.

C. Grassing

Grassing will be paid for and is included in the normal grassing for the Project according to Section 700 unless shown on the Plans to be included in the price bid for sound barriers.

D. Vine, Shrub, and Tree Planting

When the Plans state that this Item will be paid for, payment will be made under Section 702.

E. Items Not Covered by This Specification

Items shown on the Plans to be paid for but are not covered by this Specification will be paid for according to the applicable portions of the Specifications.

F. Walls

Unless a specific wall type is specified in the Contract, identify in the Proposal which wall type will be used.

1. Type B Wall

   Steel wall will be paid for at the Contract Unit Price bid per square foot (meter). Payment is full compensation for furnishing and installing materials, providing post and post embedment, and providing labor, equipment, and incidentals to complete the Work.

2. Type C Wall

   Precast concrete sound barrier will be paid for at the Contract Unit Price bid per square foot (meter). Payment is full compensation for furnishing materials, including piling and attachments and for erecting the sound barrier, including graffiti-proof coating.

3. Type D Wall

   Treated timber wall will be paid for at the Contract Unit Price bid per square foot (meter). Payment is full compensation for furnishing materials including concrete and steel and for erecting the sound barrier.

4. Type F Wall

   Glass reinforced thermoset panel walls will be paid for at the Contract Unit Price bid per square foot (meter). Payment is full compensation for furnishing and installing materials, including post and post embedment, and for erecting the sound barrier.

5. Type G Wall

   Precast autoclaved aerated concrete sound barrier will be paid for at the Contract Unit Price bid per square foot (meter). Payment is full compensation for furnishing materials, including steel supports, and for erecting the sound barrier, including graffiti-proof coating

Additional wall payment criteria:

Walls will be paid at the plan quantity plus or minus any authorized changes, or adjustments due to ground line elevation varying from plan.

Payment will be made under:

Item No. 624	Sound barrier type ___,	Per square foot (meter).
Item No. 624	Sound barrier	Per square foot (meter).

624.5.01 Adjustments

General Provisions 101 through 150.

Section 625—Visual Barrier

625.1 General Description

Specifications for this work will be included elsewhere in the Contract.

Section 626—Mechanically Stabilized Embankment Retaining Walls

626.1 General Description

This Specification covers the required materials, fabrication, construction, measurement, and payment for mechanically stabilized embankment retaining walls.

The scope of work of wall erection includes:

- Grading for wall construction
- Compacting the wall foundation
- General and local dewatering as necessary
- Constructing leveling pads
- Erecting precast panels
- Placing soil reinforcing devices
- Placing and compacting special embankment backfill within the reinforced volume
- Furnishing and placing precast or cast-in-place concrete coping and cast-in-place or precast traffic barrier on top of the wall if shown on the Plans

The wall foundation includes areas underlying the leveling pad and the reinforced volume. Ensure that items used to construct the mechanically stabilized embankment retaining walls but not mentioned in this Specification conform to the applicable Sections of the Standard Specifications.

Ensure that the architectural treatment of the precast panels is according to the Plan details.

For patented mechanically stabilized embankment retaining walls, obtain panels, soil reinforcing devices, connecting devices, joint materials, attachments, and expertise to construct the walls.

626.1.01 Definitions

Wall foundation—the area underlying the leveling pad and the reinforced volume.

626.1.02 Related References

A. Standard Specifications

Section 106—Control of Materials

Section 208—Embankments

Section 500—Concrete Structures

Section 511—Reinforcement Steel

Section 514—Epoxy Coated Steel Reinforcement

Section 535—Painting Structures

Section 645—Repair of Galvanized Coatings

Section 809—Geogrid

Section 812—Backfill Materials

Section 848—Pipe Appurtenances

Section 865—Manufacture of Prestressed Concrete Bridge Members

Section 867 – Epoxy Coated Reinforcement Strips

Section 870—Paint

B. Referenced Documents

AASHTO M 243

AASHTO T 22

ASTM A 82

ASTM A 123/A 123M

ASTM A 153/A 153M

ASTM A 185

ASTM A 307

ASTM A 325 (ASTM A 325M)

ASTM A 563

ASTM A 570/A 570M

ASTM A 709 (ASTM A 709M)

ASTM B 695

ASTM D 2240

ASTM F 463 (ASTM F 463M)

GDT 7

GDT 24a

GDT 24b

GDT 35

GDT 75

QPL 9

QPL 58

Standard Operating Procedure 3, Precast/Prestressed Concrete Bridge Members

1992 AASHTO Specifications for Highway Bridges, Section 18, Elastomeric Bearings

626.1.03 Submittals

General Provisions 101 through 150.

626.2 Materials

A. Soil Reinforcing Devices

1. Reinforcing and Tie Strips

Use tie strips shop-fabricated of hot rolled steel that conform to the minimum requirements of ASTM A 570 Grade 50 (ASTM A 570M Grade 345). Hot roll reinforcing strips from bars to the required shape and dimensions. Their physical and mechanical properties shall conform to ASTM A 709 Grade 36 (ASTM A 709M Grade 250).

2. Soil Reinforcing Mesh

   Use soil reinforcing mesh shop-fabricated of cold drawn steel conforming to the minimum requirements of ASTM A 185.

3. Backfill Stabilizing Geogrid:

   Use Backfill Stabilizing Geogrid that conforms to the requirements of Section 809.

B. Connecting Devices

1. Fasteners

   Use high-strength bolts and nuts that are hexagonal cap screw and that conform to ASTM A 325(A 325M), galvanized. Ensure that they are of the diameter shown in the Plans—1-1/2 in (40 mm) long with 3/4 in (20 mm) thread length.

   Use galvanized washers with galvanizing fastener elements conforming to ASTM A 153/A 153M.

2. Steel Strap Connectors

   Use materials that conform to the following standards:

Material	Conforms to the Requirements of:
Steel strap connection bar and plate	ASTM A 709 Grade 36 steel (ASTM A 709 Grade 250)
Bolts	ASTM A 307 (ASTM A 307M)
Nuts	ASTM A 563
Washers	ASTM F 436 (ASTM F 436M)
Coatings for connecting devices	As specified in the Subsection below

3. Attachments
   a. Use clevis loops and mesh loops fabricated of cold drawn steel wire that conforms to ASTM A 82 and are welded according to ASTM A 185. Ensure that they develop a stress of at least 0.9 times the steel's yield strength. Use loops galvanized according to ASTM A 153/A 153M, Class B 3, or ASTM A 123/A 123M.
   b. Use a connector bar that is fabricated of cold drawn steel wire that conforms to ASTM A 82 and is galvanized according to ASTM A 123/A123M.
4. Geogrid Connection Bar: Use a connection bar 1 inch (25 mm) by 0.2 inches (5 mm) thick by roll width plus 3 inches meeting the same physical and chemical properties as the backfill stabilizing geogrid.

C. Concrete

Use Class AA concrete for precast panels, except ensure that the 28-day strength is at least 4,000 psi (28 MPa). Except as indicated in the approved mix design, admixtures will not be allowed. Do not use admixtures containing chlorides.

Use Class A concrete for leveling pads, traffic barriers, and coping.

D. Joint Fillers

Treat joints between panels as listed in this Subsection.

In flood plains or other intermittently inundated areas, cover the different joint types as follows:

Joint Type	Action
Joints between panels from an elevation 3 ft (1 m) above the 100-year flood elevation to the bottom of	Cover on the back side of the wall with a woven plastic filter fabric sheet.

Joint Type	Action
the wall	
Joints between panels from 3 ft (1 m) above the 100-year high water elevation to the top of the wall	Cover on the back side of the wall with a woven or nonwoven plastic filter fabric sheet.
All other locations	Cover joints between panels with a woven or nonwoven plastic filter fabric sheet

Place in horizontal joints between panels two 4 inch by 3 inch by ¾ inch (100 mm by 75 mm by 20 mm) ribbed bearing pads or elastomeric pads as specified on the Plans. Use ribbed bearing pads made of SBR rubber with a durometer hardness of 80 plus or minus 10 as determined by ASTM D 2240.

Use elastomeric pads that are 100% virgin chloroprene (neoprene) and meet the requirements of the 1992 AASHTO Specifications for Highway Bridges, Section 18, Elastomeric Bearings. Caulk the openings on either side of and between the pads with 2 inch by 2 inch (50 mm by 50 mm) open-cell urethane foam strips or equal as approved by the Engineer in addition to any other joint treatment that is required. Caulk vertical joints with 2 inch by 2 inch (50 mm by 50 mm) open-cell urethane foam strips. Piece the urethane foam strips together with a minimum overlap of 4 inches (100 mm).

Use plastic filter fabric sheets with a minimum width as follows:

For Vertical Joints	18 inches (450 mm) wide
For Horizontal Joints	12 inches (300 mm) wide

Overlap the joint with the filter fabric by at least 4 inches (100 mm). When piecing together the filter fabric, overlap by at least 4 inches (100 mm). Glue the filter fabric to the panels using any adhesive on the Qualified Products List (QPL). Use any woven and nonwoven plastic filter fabric listed on the QPL for work in this Specification, subject to the above requirements.

E. MSE Wall Backfill Material

Use material in the MSE Wall Backfill volume that conforms to the requirements of Subsection 812.2.04. In addition, obtain approval for use of the material by the Office of Materials.

F. Coatings For Steel Soil Reinforcing Devices

Apply coatings to the soil reinforcing devices as follows:

1. Galvanize the entire surface of reinforcing and tie strips, mesh, and connecting devices according to ASTM A 123/A 123M. Or galvanize it mechanically according to ASTM B 695, Class 110, unless otherwise specified on the Plans. Also galvanize the surfaces created by punching holes for bolts.
2. Repair damage sustained by the connecting devices, bolts, or reinforcing devices during phases of fabrication, storage, or erection according to Section 645.

   Repair by brush coating with an approved galvanizing repair compound as specified in Subsection 870.2.05.A.2 to the Engineer's satisfaction at no increase in Contract cost.
3. Galvanize the parts of the connecting devices that are threaded according to ASTM A 153/A 153M, Class C. Hot dip galvanize alignment pins.
4. When the Type 2P coating is required on the Plans:
   a. After manufacturer galvanizing is complete, shop-coat the entire surface for the length indicated on the Plans with a two-component coal tar epoxy system indicated in Subsection 535.3.03.D, "Prepare Steel Piling, Swaybracing, and Concrete Piling Surfaces for Special Protective Coatings," for a Type 2P coating according to Subsection 870.2.05.A.1.
   b. Use Type 2P coating to field-coat galvanized nuts, bolts, and washers used to connect reinforcing and tie strips. Repair damage to the coating on connecting devices or reinforcing devices from shipping, storage, or erection to the Engineer's satisfaction at no additional cost.

c. Use Type 2P coating to field-coat the parts of the connecting devices exposed after installing the soil reinforcing devices.

5. Epoxy coat the entire surface according Section 514 and Section 867, when required on the Plans.
   a. Do not galvanize the soil reinforcing devices if this coating method is used.
   b. Use Type 2P coating to field-coat galvanized nuts, bolts, and washers used to connect reinforcing and tie strips.
   c. Use Type 2P coating to field-coat the parts of the connecting devices exposed after installing the soil reinforcing devices.
6. Repair damage to the coating on the connecting devices or soil reinforcing devices from shipping, storage, or erection to the Engineer's satisfaction at no additional cost.

G. Reinforcing Steel

Use reinforcing steel that conforms to the requirements of Section 511.

H. Welded Wire Fabric for Precast Panels

Use welded wire fabric that conforms to the requirements of ASTM A 82.

I. Certification

The Department will use certified test report as specified in Subsection 106.05, "Materials Certification" and perform routine tests as a basis for material acceptance furnished for The Work.

J. Corrosion Inhibiting Material

For the corrosion inhibiting material, use a bituminous plastic cement material that conforms to the requirements of Section 848, AASHTO M 243 Trowel Grade Asphalt Mastic, or use an approved corrosion-inhibiting grease.

626.2.01 Delivery, Storage, and Handling

Handle, store, and ship panels to eliminate the danger of chipping, cracking, discoloring, fracturing, and excessive bending stresses.

Repair at the plant the panels damaged during handling or storage at the casting plant as directed by the Engineer. Panels damaged during handling, storing, or shipping may be rejected upon delivery at the Engineer's discretion.

Support panels in storage on firm blocking located immediately adjacent to embedded connecting devices to avoid bending the connecting devices. Repair the coating on ties or soil-reinforcing devices damaged during handling or placing to the Engineer's satisfaction.

626.3 Construction Requirements

626.3.01 Personnel

A. Wall Crew Supervisor

Ensure that the wall crew supervisor has previous satisfactory experience in erecting mechanically stabilized walls.

626.3.02 Equipment

General Provisions 101 through 150.

626.3.03 Preparation

A. Prepare the Foundation

Before beginning construction, prepare the foundation as follows:

1. Grade the foundation for the mechanically stabilized embankment retaining wall level to a width equal to or exceeding the width of the reinforced volume and leveling pad.

Use the top of the leveling pad as the grade elevation.

2. Before beginning the wall and leveling pad construction, compact the foundation to at least 95 percent of maximum laboratory dry density as determined by GDT 7.
3. Where walls are used as a bridge abutment, compact the foundation material as follows:
   a. When a portion of the wall is a bridge abutment, ensure that portions of the wall within 100 ft (30 m) of the lateral limits of the bridge have foundation material compacted to at least 100 percent of maximum laboratory dry density as determined by GDT 7.
   b. When walls are used solely as bridge abutments, compact the foundation material for the entire wall to at least 100 percent of maximum laboratory dry density as determined by GDT 7.

   Place and compact the embankment beneath the wall according to Section 208.
4. If excavating below the leveling pad elevation, reconstruct the area as embankment.
5. Remove and replace foundation soils that are incapable of sustaining the required compaction as directed by the Office of Materials.
6. At each panel foundation level, provide a non-reinforced concrete leveling pad as shown on the Plans.
   a. Place leveling pads so they are level within 1/8 in (3 mm) per pad or per 10 ft (3 m), whichever length is greater.
   b. Repair or replace leveling pads that do not meet this requirement as directed by the Engineer at the Contractor's expense.
   c. If using bearing pads on the leveling pad on the initial row of panels, also use them on all the leveling pads of that wall.
   d. Fill the horizontal joint between the leveling pad and panels with 2 in by 2 in (50 mm by 50 mm) polyether foam strips and cover with filter cloth.
   e. Use neoprene strips 3/16 in (5 mm) thick as necessary to level panels. Do not use more than 3/8 in (10 mm) of neoprene strips.
   f. If more leveling is required, take other corrective action, such as replacing the leveling pad or replacing panels.
7. Embed the wall at least 5 ft (1.5 m) into an embankment, when shown on the Plans. Construct the embankment before constructing the leveling pad and placing backfill for the wall.

   For step details on leveling pads, see plans and construction details.

626.3.04 Fabrication

A. Soil-Reinforcing Devices

Have steel soil-reinforcing devices shop fabricated. Use shop fabricated steel mesh of cold drawn steel welded into the finished mesh fabric according to ASTM A 185.

Cut soil-reinforcing devices to lengths and tolerances shown on the Plans. Punch holes for bolts in the location shown. Ensure that soil-reinforcing devices are true to size and free of defects that may impair the strength or durability.

B. Connecting Devices

Use connecting devices of the dimensions shown on the Plans. Assemble connecting members and soil-reinforcing devices before galvanizing the connecting devices. Ensure that the connecting devices are true to size and are free of defects that may impair the strength or durability.

Tie strips may be partially bent to no more than a 1 in (25 mm) radius before they are shipped to the precast yard. Perform final bending at the precast yard.

Do not allow connecting devices, reinforcing steel, or welded wire fabric used in the panels to contact each other.

C. Bolts and Nuts

Ensure that the nominal diameter is as defined in Subsection 626.2.B, "Connecting Devices."

D. Precast Panels

Use precast panel materials as specified in Subsection 626.2, "Materials." Before casting, set the following in place to the dimensions and tolerances shown on the drawings:

- Tie strips
- Mesh attachment straps
- Coil embeds
- Coil bolts
- Reinforcing steel
- Welded wire fabric
- Connecting pins
- Handling devices

Do not allow the metal connecting devices and reinforcing steel to contact each other when in their final position in the panel.

1. Testing and Inspection

   Use precast concrete panels that are cast at a Class A or B plant that conforms to Standard Operating Procedure 3, Precast/Prestressed Concrete Bridge Members. See QPL 9 for a list of approved plants.

2. Casting

   Cast the panels using steel forms.

   a. Cast the front face of the panel (the face exposed to view when installed in the wall) against a steel form or architectural form liner. Float finish the back face.
   b. Place the concrete in each panel without interruption and consolidate it using an approved vibrator. Supplement vibration with hand tamping as necessary to force the concrete into the corners of the forms and prevent the formation of stone pockets or cleavage planes from forming.
   c. Use clear form oil from only one manufacturer throughout the casting operation.

3. Curing

   Cure the panels as specified in Subsection 500.3.05.Z, "Cure Concrete," or Subsection 865.2.01.B.10, "Concrete Curing." Cure for at least 12 hours or until the concrete develops the specified compressive strength. The Engineer will reject panels that do not reach specified strength within 28 days.

4. Removing Forms

   Keep forms in place until they can be removed without damaging the panel.

5. Concrete Finishing and Tolerances

   Finish the concrete surface for the front face as designated on the Plans. Float-finish the rear face enough to eliminate open aggregate pockets and distortions greater than 1/4 in. (6 mm).

   Only use panels manufactured within the following tolerances:

   - All dimensions are within 3/16 in. (5 mm).
   - Angular distortion in the panel's height does not exceed 3/16 in. (5 mm) in 5 ft. (1.5 m).
   - Diagonal tolerance from Plan dimensions is no more than 3/8 in. (10 mm).

   For textured finishes, surface defects greater than 5/16 in. (8 mm) in 5 ft (1.5 m) will be rejected.

6. Determining Compressive Strength

   Perform compression tests to determine the minimum strength requirements on cylinders.

   a. Make at least three cylinders to determine when the units may be put into service from each day's production and cure according to GDT 35.D.B.6.

      Make two additional cylinders from each day's production or from each 10 cubic yards of concrete placed, whichever is the lesser amount of concrete, to determine the 28-day strength.

b. Ensure that the shipping strength is equal to the required 28-day strength for each day's production or for each 10 yd^3 (7.5 m^3) of concrete placed, whichever amount of concrete is less.

c. Cure according to GDT 35.D.B.6. Ensure that the 28-day compressive strength is at least 4,000 psi (28 MPa). Perform compressive strength tests according to AASHTO T 22.

7. Rejection

Panels will be rejected if they do not meet the requirements above. The following defects are also cause for rejection:

- Indications of imperfect molding that result in tolerances being exceeded
- Honeycombed or open texture concrete

8. Marking

Clearly and permanently mark on the rear face of each panel the date of manufacture, lot number, and type of panel.

E. Precast Coping and Precast Traffic Barrier

To construct the precast portion of the coping or precast traffic barrier, use materials that conform to Subsection 626.2.C, "Concrete." Use the same procedures for precasting, testing, and inspection as those for precast panels.

626.3.05 Construction

A. Wall Erection

Place precast panels so that their final position at the completion of the wall is vertical.

1. Adjust the batter to allow for the effect of backfill type, equipment, and construction method on panel movement.
2. In general, batter the panels 1/2 in. (10 mm) in 4 ft (1 m) into the reinforced volume to allow the panel to move during backfill placement and compaction.
3. Place panels in successive horizontal lifts as backfill is placed.
   a. When placing backfill behind a panel, maintain the panel in a vertical position by placing clamps and temporary wooden wedges in the joints at the junction of two adjacent panels on the external side of the wall.
   b. Use external bracing for the initial lift. Keep the wedges in place until the fourth layer of panels is placed, then remove the bottom layer of wedges.
   c. Remove each succeeding layer of wedges when placing the succeeding panel layers.
   d. When the wall is completed, remove the wedges. Do not use the wedges to level the panels on leveling pads.
   e. Remove the wedges placed below the groundline on the front face of the wall before backfilling this area.
4. Alignment and tolerance are as follows:
   a. Ensure that the horizontal and vertical joint openings between panels are uniform. Ensure that the opening is 7/8 in ± 3/8 in. (22 mm ± 10 mm).
   b. Ensure that the vertical tolerance (plumbness) and horizontal alignment tolerance as the wall is constructed does not exceed 3/4 in (20 mm) when measured along a 10 ft (3 m) straightedge.
   c. Ensure that the overall vertical tolerance of the wall (plumbness from top to bottom) in its final position does not exceed 1/2 in per 10 ft (13 mm per 3 m) of wall height.
   d. Place cast-in-place concrete on top of the wall panel to bring the precast coping elements on top of the wall to proper grade. See the plans or construction details.

      Before placing special backfill material on a soil-reinforcing device, complete the connections to the panels.

B. Joint Fillers

Treat joints between the panels as follows:

1. In flood plains or other intermittently inundated areas, cover the joints as follows:
   - Use a woven plastic filter fabric sheet to cover the joint on the back side of the wall between panels from 3 ft (1 m) above the 100-year flood elevation to the bottom of the wall.

- Use a woven or nonwoven plastic filter fabric sheet to cover the joint on the back side of the wall between panels from 3 ft (1 m) above the 100-year high-water elevation to the top of the wall.

2. At other locations, cover joints between panels with a woven or nonwoven plastic filter fabric sheet.
3. Ensure that horizontal joints between panels contain two 4 by 3 by ¾ in (100 by 75 by 20 mm) ribbed bearing pads or elastomeric pads as specified on the Plans. Use ribbed bearing pads that are SBR rubber with a durometer hardness of 80 plus or minus 10 as required in ASTM D 2240.
4. Use elastomeric pads that are 100 percent virgin chloroprene (neoprene) meeting the requirements of the 1992 AASHTO Specifications for Highway Bridges, Section 18, Elastomeric Bearings.
5. Caulk the openings on either side of and between the pads with 2 by 2 in (50 by 50 mm) open cell urethane foam strips, or equal as approved by the Engineer in addition to other required joint treatments.
6. Caulk vertical joints with 2 by 2 in (50 by 50 m) or open cell urethane foam strips. When piecing the urethane foam strips together, overlap them at least 4 in. (100 mm).
7. Ensure that the minimum width of the plastic filter fabric sheets are as follows:

For vertical joints	18 in (450 mm) wide
For horizontal joints	12 in (300 mm) wide

8. Overlap the filter fabric with the joint at least 4 in. (100 mm).
9. When piecing the filter fabric together, overlap at least 4 in. (100 mm).
10. Glue the filter fabric to the panels. Use an adhesive on QPL 58.

C. MSE Wall Backfill

Place backfill shortly after erecting each lift panel. Follow these guidelines:

1. Place backfill lift to a uniform thickness and place it from the back face of the wall to 1 ft (300 mm) beyond the end of the soil-reinforcing devices.
2. At each soil-reinforcing device level, compact the backfill to the full length of reinforcing devices and slope it to drain away from the wall before placing and attaching the next layer of reinforcing devices.
3. Level the compacted backfill with the connecting device before connecting the reinforcing device.
4. Repair damaged soil reinforcing devices or panels before attaching and backfilling the reinforcing devices.
5. Place soil reinforcing devices at 90 degrees to the face of the wall, unless otherwise indicated on the Plans or by the Engineer.
6. Ensure that the maximum lift thickness is 8 in (200 mm) (loose) and closely follows panel erection. Decrease this lift thickness to obtain the specified density, if required.
7. Compact the embankment backfill material to at least 100 percent of maximum laboratory dry density as determined by GDT 7 or GDT 24a, GDT 24b Method A or B, for full depth of the material.
8. Compact the embankment backfill material without disturbing or displacing the reinforcing devices and panels.
9. Compact from the area nearest the wall face to the back of the reinforcing devices except for a strip 3 ft (1 m) wide adjacent to the backside of the wall.

   After compacting the remainder of the layer, compact this 3 ft (1 m) strip with light mechanical tampers without causing the panels to move outward.
10. Whenever a compaction test fails on a special embankment backfill lift, do not place additional material over that area until the lift is re-compacted and obtains a passing compaction test.
11. Ensure that the stabilizing geogrid at any layer is held taut, by mechanical means, free of wrinkles, bends or undulations until the special backfill material has been placed and compacted above the restrained layer to the level of the next layer of stabilizing geogrid. Release the uppermost layer of stabilizing geogrid after the final layer of special backfill is placed and compacted.

D. Storm Drains

Provide precast panels that have the appropriate storm drain openings into panels at the elevation and locations indicated on drainage profiles.

Place catch basins so that pipes will enter perpendicular (plan view) to the panels or below the leveling pads as shown on the Plans. Coordinate the catch basin construction and the storm drain placement with the wall construction.

E. Dewatering

Furnish, install, operate, and maintain satisfactory dewatering systems to maintain the site in a dry and workable condition to permit grading, compacting the wall foundation, and erecting and backfilling the wall. Furnish dewatering system equipment and materials and continue the system as long as necessary.

F. Catch Basins and Longitudinal Pipes

When catch basins are located behind the wall and the Wall Plans do not indicate a specific construction method, use the method outlined in the construction details.

When longitudinal pipes are located behind the wall, follow this procedure if specific details are not shown on the Wall Plans:

1. Bend the soil-reinforcing device around the pipe without damaging the device, its coating, or its attachment to the precast panel. See the construction details.
2. If the pipe is too close to the wall to bend the soil-reinforcing device without damaging it, the Engineer will investigate relocating the pipe. The Engineer will contact the design office that designed the drainage system or the office responsible for the pipe and will investigate the pipe relocation.
3. If the pipe cannot be relocated or if the pipe is too large for relocation to be feasible, use the back-up panel procedure indicated on the construction details.

Use precast concrete or cast-in-place concrete for:

- Drainage structures that are within the special embankment backfill
- Drainage structures that are outside the special embankment backfill but that are within 5 ft (1.5 m) of the front face of the wall

626.3.06 Quality Acceptance

General Provisions 101 through 150.

626.3.07 Contractor Warranty and Maintenance

General Provisions 101 through 150.

626.4 Measurement

When a mechanically stabilized embankment retaining wall is built to Plan dimensions, the Plan quantities are the pay quantities. When the Engineer changes Plan dimensions during construction, or when original Plans are in error, the revised Plan quantities are the pay quantities.

A. Excavation and Shoring

Excavation, including removing unstable material and shoring for construction of the mechanically stabilized embankment retaining wall, will not be measured and paid for separately.

B. Precast Concrete Panels

The panels complete in place and accepted are measured for payment by the square foot (meter). The area of drains through the wall are not deducted.

C. Soil Reinforcing Devices

The reinforcing strips, backfill stabilizing mesh, or backfill stabilizing geogrid is measured for payment by the linear foot (meter) of strip, mesh or geogrid.

D. Backfill

The special embankment backfill used in the mechanically stabilized embankment retaining wall volume is measured for payment by the cubic yard (meter) and as shown on the Plans. The limits of the mechanically stabilized embankment retaining wall volume are as follows:

1. The width shall be the length of the reinforcing devices plus 12 in (300 mm). Where reinforcing device length changes, the volume width change will occur midway between reinforcing device layers.
2. The height shall extend from the top of the leveling pad to at least 6 in (150 mm) or to a maximum of 3 ft (1 m) above the uppermost reinforcing device layer. The uppermost reinforcing device layer may be attached to the wall, traffic barrier, or bridge cap.
3. The length shall extend for the entire length of the wall.
4. Backfill material required by construction procedures to extend beyond the mechanically stabilized embankment retaining wall volume is incidental and is included in the price bid for Contract items.
5. If the mechanically stabilized embankment retaining wall volume increases from undercut ordered by the Engineer and requires special embankment backfill to provide stability, as determined by the Engineer, this will be measured and paid for at the Contract Unit Price bid per cubic yard (meter) for special embankment backfill.

   If undercuts are not provided for on the Plans and the Engineer determines that special embankment backfill is not appropriate, backfill with foundation material conforming to Subsection 812.2.02, “Foundation Backfill, Type II.” Payment for foundation backfill material used in this application is at the Contract Price bid per cubic yard (meter) for special embankment backfill.

   Backfill for undercut areas that do not require materials of grades higher than common excavation soils will not be measured or paid for separately.

E. Concrete Leveling Pads

Concrete leveling pads are measured for payment by the linear foot (meter). This includes steps shown on the Plans.

F. Dewatering

No separate measurement or payment will be made for dewatering. Include the cost of dewatering in the price bid for special embankment backfill.

G. Units Mounted on the Mechanically Stabilized Embankment Retaining Wall

Units on the mechanically stabilized embankment retaining wall, complete in place and accepted, will be designated on the Plans and paid for at the Contract Unit Price bid per linear foot (meter) for each of the following unit types:

- Cast-in-place coping A
- Cast-in-place coping B
- Precast coping
- Traffic barrier V
- Traffic barrier H

Use traffic barrier H and cast-in-place coping B whenever noise walls, light standards, or other appurtenances are mounted on top of the barrier or coping. Use traffic barrier V and cast-in-place coping A when no appurtenance is used on top of the barrier or coping. Cast all traffic barriers in place except traffic barrier H, which is precast when detailed as precast on the Plans.

626.4.01 Limits

General Provisions 101 through 150.

626.5 Payment

When mechanically stabilized embankment retaining walls are built to Plan dimensions, the Plan quantity will be the pay quantity. When Plan dimensions are revised at the Engineer's direction, mechanically stabilized embankment retaining wall will be paid for using the revised Plan quantities. Payment is full compensation for fabricating, transporting, and erecting material according to the Plans and Specifications.

Separate measurement or payment is not made for tools, superintendence, labor, fasteners, coatings, joint materials (including but not limited to SBR or elastomeric pads, polyether foam, and filter fabric), site preparation, filler concrete, or other incidentals for performing the work. Soil-reinforcing devices attached to the traffic barrier or coping are not measured separately for payment but are included in the price bid for traffic barrier or coping.

Concrete side barrier, noise walls, light standards, V-gutters, guard rail, fencing, and handrail, when shown on the Plans, will be paid for according to the applicable sections of the Project Specifications. Anchor bolts for sleeves for mounting fencing and light standards or noise walls on the wall are included in the price bid for wall items.

Payment will be made under:

Item No. 626	Concrete facia panels	Per square foot (meter)
Item No. 626	Backfill stabilizing devices	Per linear foot (meter)
Item No. 626	MSE wall backfill material	Per cubic yard (meter)
Item No. 626	Concrete leveling pad	Per linear foot (meter)
Item No. 626	Cast-in-place coping A	Per linear foot (meter)
Item No. 626	Cast-in-place coping B	Per linear foot (meter)
Item No. 626	Traffic barrier V	Per linear foot (meter)
Item No. 626	Traffic barrier H	Per linear foot (meter)
Item No. 626	Precast coping	Per linear foot (meter)

626.5.01 Adjustments

General Provisions 101 through 150.

Section 627—Mechanically Stabilized Embankment Retaining Wall—Contractor Design

627.1 General Description

This Specification covers the required materials, fabrication, construction, measurement, and payment for Contractor designed Mechanically Stabilized Embankment (MSE) retaining walls.

The scope of work of wall erection includes:

- Grading for wall construction
- Compacting the wall foundation
- General and local dewatering as required
- Constructing leveling pads
- Erecting precast panels
- Placing soil reinforcing devices
- Placing and compacting special embankment backfill within the reinforced volume

- Furnishing and placing precast or cast-in-place concrete coping and cast-in-place or precast traffic barrier on top of the wall if shown on the Plans
- Providing downdrag protection for piles
- Furnishing and placing precast or cast-in-place concrete coping and precast or cast-in-place traffic barrier on the top of the wall if these items are shown in the Plans.

The wall foundation includes areas underlying the leveling pad and the reinforced volume. Ensure that items used to construct the mechanically stabilized embankment retaining walls but not mentioned in this Specification conform to the applicable sections of the Standard Specifications.

For patented mechanically stabilized embankment retaining walls, obtain panels, soil reinforcing devices, connecting devices, joint materials, attachments, and expertise to construct the walls.

627.1.01 Definitions

Wall foundation—the area underlying the leveling pad and the reinforced volume.

627.1.02 Related References

A. Standard Specifications

Section 106—Control of Materials

Section 208—Embankments

Section 500—Concrete Structures

Section 511—Reinforcement Steel

Section 514—Epoxy Coated Steel Reinforcement

Section 535—Painting Structures

Section 645—Repair of Galvanized Coatings

Section 812—Backfill Materials

Section 848—Pipe Appurtenances

Section 865—Manufacture of Prestressed Concrete Bridge Members

Section 870—Paint

B. Referenced Documents

GDT 75

1992 AASHTO Specifications for Highway Bridges, Section 18, Elastomeric Bearings

627.1.03 Submittals

Submit construction drawings and design notes to the Engineer for review and approval. The submission shall be prepared and stamped by the Design Engineer who shall be registered as a Professional Engineer in the State of Georgia.

Include in the submission, design notes and reproducible drawings concerning the following:

A. Details, dimensions, and schedules of all reinforcing steel, including dowels and/or studs for attaching the facing to the backfill reinforcement.

B. Details of backfill stabilizing devices including the length, spacing and size and type material.

C. For MSE Walls at Bridge Ends:

- Ensure that MSE wall backfill extends vertically to the bottom of the approach slab.

- Ensure that the MSE wall backfill extends horizontally to the back of the MSE backfill for the wall below the approach slab or 12 inches (300 mm) beyond the end of the stabilizing devices attached to the bridge, whichever is greater.
- Show details of attachments to be cast into the bridge endbent, endwall and backwall.
- Do not make attachments to bridge endwalls that are integral to the bridge superstructure and are subject to movement due to superstructure expansion and contraction.

D. Use Traffic barrier H, and Cast-in-place Coping B whenever noise walls, light standards, or any other appurtenance is mounted on top of the barrier or coping.

Use Traffic barrier V and Cast-in-place Coping A when no appurtenance is used on top of the barrier or coping.

Traffic barriers shall be cast in place, except that traffic barrier H shall be precast when detailed as precast on the Plans.

E. Ensure that Plans match GDOT plans in size, format, borders, title block, etc.

F. Prepare the Plans in “microstation.dgn” format.

G. Itemize the wall quantities as follows:

1. Wall Envelope quantities in the Plans.
2. Changed quantities based on the survey verification of the Wall Envelope (Adjusted Wall Envelope).

The time required for preparation and review of plans and calculations will be charged to the allowable contract time. The final plans and calculations for a wall shall be approved prior to beginning construction on the wall.

The Department will be allowed 45 days to review the plans and calculations and provide either approval or review comments to the contractor. The 45-day review time will begin when the Department has received all of the calculations and drawings concerning the structure. Each new submittal from the Contractor as a result of corrections resulting from the Department's review or changes that are made by the contractor to expedite construction or to correct for field errors will have a 45 day review time.

The Department will be the sole judge of the adequacy of the information submitted. The review and acceptance of the final plans and methods of construction by the Department will not in any way relieve the Contractor of responsibility for the successful completion of the work. Contractor delays due to untimely submissions and insufficient information will not be considered as justification for time extensions.

Within 30 days of receiving Department approval of the plans, submit “stamped” reproducible mylar originals for inclusion in the project plans. Also, submit Electronic files of the final plans. For any changes made during construction of the wall, submit “as built” reproducible mylar originals and “as built” electronic files.

627.2 Materials

Meet the requirements of Subsection 626.2, “Materials” of the Specifications.

627.3 Construction Requirements

627.3.01 Personnel

Meet the following personnel requirements:

A. Design

Use a Design Engineer with the following qualifications to design the wall and prepare and submit plans for approval:

- Is a registered as a Professional Engineer in the State of Georgia.
- Has knowledge and experience with the design and construction of MSE walls.
- Is available at any time during the life of the Contract to discuss the design of the walls directly with the Department.

B. Construction

The Contractor or Subcontractor shall meet the following requirements:

- Be experienced in the construction of Mechanically Stabilized Embankment Walls.
- Include on staff, a supervising engineer for the Project with at least five years of experience in the construction of Mechanically Stabilized Embankment Walls.

Submit the following proof, whenever requested by the Department, of the ability to design and/or construct Mechanically Stabilized Embankment Walls.

- Evidence of the successful completion of at least five Projects similar in concept and scope to the proposed wall.
- Resumes of the supervising engineer and foremen to be employed on this Project showing the type and number of Mechanically Stabilized Embankment Walls each worked on within the past five (5) years.

The Department will be the sole judge of the acceptability of the qualifications of the design engineer, supervising engineer and foreman.

627.3.02 Equipment

General Provisions 101 through 150.

627.3.03 Preparation

A. General Requirements – Designing and Detailing

The Department's plans will include a Wall Envelope. The Wall Envelope will show:

- The existing and proposed ground line,
- The maximum elevation of the top of the leveling pad
- The proposed top of coping or the proposed gutterline elevations where the barrier is attached to the wall
- The soil parameters for the wall design
- The location of any internal walls required
- The location of other appurtenances including but not limited to:

  --Light standards

  -- Sound barriers

  --Sign supports
- Other obstructions in the wall backfill including but not limited to:

  -- Drainage structures and pipes

  -- Bridge columns, caps, wingwalls

  -- Bridge piles
- Details of any proposed ditches at the top of the wall
- Proposed pay quantities

Ensure that the wall design is compatible with all horizontal and vertical criteria and backfill loading conditions.

Verify the wall location according to Subsection 149.1.03.E and Subsection 149.3.03.D before the final wall design is submitted. Include in the verification:

- The top and bottom of the wall envelope
- Backfill design conditions
- Depth of wall embedment

- Location of drainage structures and other obstructions in the wall backfill
- Other appurtenances located on the wall.

If any changes to the wall envelope are required by the field survey, submit plan sheets to the Engineer for approval showing the wall envelope as detailed in the plans with the required changes noted.

B. Wall Design

Use the following design criteria for a Contractor designed wall:

1. Provide one of the following wall systems:
   - ARES (Tensar Earth Technologies)
   - Reinforced Earth Wall (The Reinforced Earth Company)
   - Tricon Retained Soil Wall (Tricon Precast)
   - Stabilized Earth Wall (T&B Structural Systems)
2. Design the MSE Wall according to the current AASHTO Standard Specifications for Highway Bridges including interims. (Mechanically Stabilized Earth Wall Design – Section 5.8)
3. Design the MSE wall to account for all live load, dead load and wind load from all traffic barriers, lights, overhead signs, sound barriers and other appurtenances located on top and adjacent to the wall. Design MSE walls to account for all external forces. Also, design abutment walls for all horizontal and vertical loads applied by the bridge.
4. Assume responsibility for all temporary shoring that may be necessary for wall construction. Design the shoring using sound engineering principles.
5. Use permanent concrete wall facing panels that are at least 7 in (175 mm) thick.
6. Provide a minimum length of soil reinforcement of 10 feet (3 m) or seven-tenths (0.7) of the wall height, whichever is greater.
7. Ensure that the special wall backfill extends a minimum of 12 in (300 mm) past the end of the soil reinforcement.
8. Use the Architectural treatment of facing panels as indicated on the Department's drawings.
9. Provide internal walls to allow for future widening if shown on the wall envelope. Ensure the internal walls have galvanized wire or concrete facing. Ensure as a minimum that the facing of the internal walls extend to the back limit of the MSE Wall Backfill for the permanent wall.
10. Ensure the maximum panel area does not exceed 35 square feet (3.25 square meters).
11. Design the barrier for 500 lbs. per linear foot (744 kilograms per linear meter) loading applied horizontally along the top of the barrier. The barrier shall be continuous or have a counterweight slab continuous over not less than four panels.
12. A Foundation Investigation Report may be available from the Geotechnical Engineering Bureau of the Department. The information contained in this report may be used by the Contractor to assist in evaluating existing conditions for design as well as construction. However, the accuracy of the information is not guaranteed and no requests for additional monies or time extensions will be considered as a result of the Contractor relying on the information in this report.
13. Ensure the following requirements are met:
    - The gutterline grade on the proposed top of wall submitted matches the gutter elevations required by the plans.
    - The top of coping is at or above the top of coping shown on the envelope.
    - The leveling pad is at or below the elevation shown on the wall envelope.
    - Any changes in wall pay quantities due to changes in the wall envelope are noted in the contractor's plans

- All changes in quantities due to the proposed walls being outside the wall envelope (step locations, ending wall at full panel, etc.) are shown as separate quantities.

14. Ensure the minimum embedment of the wall (top of leveling pad) is at least 2 feet (600 mm). If the soil slopes away from the bottom of the wall, lower the bottom of the wall to provide a minimum horizontal distance of 10 ft (3 m) to the slope. [i.e. a 2:1 slope in front of the wall requires 5 ft (1.5 m) of embedment; a 4:1 slope in front of the wall requires 2.5 ft (750 mm) of embedment]
15. If the Department's review of the submitted plans and calculations results in more than two submittals to the Department by the Contractor, the Contractor will be assessed for all reviews in excess of two submittals. The assessment for these additional reviews will be at the rate of $60.00 per hour of engineering time expended.

627.3.04 Fabrication

Meet the requirements of Subsection 626.3.04 of the Specifications.

627.3.05 Construction

Meet the requirements of Subsection 626.3.05 of the Specifications.

627.3.06 Quality Acceptance

General Provisions 101 through 150.

627.3.07 Contractor Warranty and Maintenance

General Provisions 101 through 150.

627.4 Measurement

A. Excavation and Shoring

Excavation, including any required removal of unstable material, and shoring necessary for construction of the MSE Wall will not be measured for payment.

B. MSE Wall Face

The area of wall face, complete in place and accepted, will be designated for payment by the square foot (meter) for each height. The area of drains through the Wall will not be deducted.

The wall area measured for payment will be the area from the proposed top of coping or the proposed gutterline or top of sidewalk elevations to the maximum elevation of the top of the leveling pad for each height wall.

Any area of cast-in-place facing around drainage structures within the approved wall envelope will be measured as MSE Wall Face. “Dummy” panels will not be measured for payment.

No separate measurement will be made for internal wall facing.

The entire vertical section of wall will be measured for the greatest height within each section. (i.e. The entire envelope area of a 25 ft (7.62 m) long section of wall that measured from 12 ft (3.66 m) high to 18 ft (5.5 m) high will be measured for payment as MSE Wall Face, Wall No. _ [>10’-20’ (3 – 6 m) ht].

The height will be measured from the maximum elevation of the top of the leveling pad to the:

1. Top of Coping or,
2. Gutterline Elevation at the Barrier or,
3. Top of Sidewalk at Parapet

C. Backfill Stabilizing Devices

The backfill stabilizing devices will not be measured separately.

D. Backfill

The MSE backfill material used in the MSE wall volume will not be measured separately except as noted below.

- The MSE Backfill required behind bridge endwalls or backwalls and above the top of coping will be measured as additional MSE wall backfill.
- Any additional MSE backfill required as a result of an undercut ordered by the Engineer and requiring the MSE backfill material to provide stability, as determined by the Engineer, will be measured and paid for as additional MSE wall backfill.

Backfill of undercut areas not requiring classes of soils higher than common excavation soils will not be measured separately.

Backfill material required by construction procedures to extend outside the MSE wall volume shall be considered incidental and will not be measured separately.

E. Concrete Leveling Pads

Concrete Leveling Pads will not be measured separately.

F. Cast-in-place Coping A, Cast-in-place Coping B, Precast Coping, Traffic Barrier V, Traffic Barrier H, mounted atop the MSE Wall

These units complete in place and accepted, will be designated on the Plans and measured per linear foot (meter) for each type unit.

The quantities of coping and barrier will be measured as horizontal lengths in linear feet (meters).

627.4.01 Limits

General Provisions 101 through 150.

627.5 Payment

The pay quantities will be the Wall Envelope quantities shown in the Plans unless the Engineer approves an adjusted wall envelope. In this case, the pay quantities will be the adjusted wall envelope quantities.

No additional compensation will be made for any additional material, equipment, design, or other items found necessary to comply with the project Specifications as a result of the Department's review except for changes made necessary by the survey verification required by Subsection 149.1.03.E and Subsection 149.3.03.D, or other changes approved by the Engineer.

Include in the unit bid prices all costs necessary to comply with the requirements of this specification. No payment will be made for wall area outside of the adjusted wall envelope.

A. Excavation and Shoring

Excavation, including removing unstable material and shoring for construction of the mechanically stabilized embankment retaining wall, will not be paid for separately.

B. MSE Wall Face

The area of wall face, complete in place and accepted, will be paid for by the square foot (meter) for each height. The area of drains through the wall will not be deducted.

Any area of cast-in-place facing around drainage structures within the approved wall envelope will be paid as wall face. Payment will include all costs for concrete, reinforcing steel in the cast-in-place areas. No additional payment will be made for any “dummy” panels required.

If the wall height changes to a height greater than the maximum included in the pay items, the area of wall with a height greater than the maximum will be paid at 120% of the bid price of the maximum height pay item included in the plans.

The entire vertical section of wall will be paid at the unit price for the greatest height within each section. (i.e. The entire envelope area of a 25 foot (7.62 m) section of wall that measured from 12 ft (3.66 m) high to 18 ft (5.5 m) high will be paid as MSE Wall Face, Wall No. _ [>10'-20' (3 – 6 m) ht]

No separate payment will be made for architectural treatment.

No separate payment will be made for internal wall facing, internal wall backfill stabilizing devices or additional MSE backfill necessitated by the internal wall.

C. Backfill Stabilizing Devices

The backfill stabilizing devices will not be paid for separately. Include this cost in the unit price bid for MSE wall face.

D. Backfill

The MSE backfill material used in the MSE wall volume will not be paid for separately except as noted below. When not paid for separately, include the cost in the unit price bid for MSE wall face.

Exceptions:

- The cost of MSE Backfill required behind bridge endwalls or backwalls and above the top coping will be paid for as Additional MSE Wall Backfill.
- Any additional MSE backfill required as a result of an undercut ordered by the Engineer and requiring the MSE backfill material to provide stability, as determined by the Engineer, will be paid as additional MSE wall backfill.
- If no quantities for this item are included in the proposal, a price of $25 per cubic yard ($33.00 per cubic meter) will be paid.

Backfill of undercut areas not requiring materials of grades higher than common excavation soils will not be paid for separately. Include the cost in the overall bid price submitted.

Any backfill material required by construction procedures to extend outside the MSE Wall volume is considered incidental. Include this cost in the price bid for contract items.

E. Concrete Leveling Pads

Concrete leveling pads, including steps shown in the Plans will not be paid for separately.

F. Cast-in-place Coping A, Cast-in-place Coping B, Precast Coping, Traffic Barrier V, Traffic Barrier H, mounted atop the MSE Wall

These units, complete in place and accepted, will be designated on the Plans and paid for at the Contract Unit Price bid per linear foot (meter) for each type unit.

G. Dewatering

No separate payment will be made for dewatering. Include the cost of dewatering in the price bid for special embankment backfill.

Payment will be made under:

Item No. 627	MSE wall face, wall No. __0 -10 ft (0 -3 m)	Per square foot (meter)
Item No. 627	MSE wall face, wall No. __>10 -20 ft (3 -6 m)	Per square foot (meter)
Item No. 627	MSE wall face, wall No. __>20- 30 ft (6 -9 m)	Per square foot (meter)
Item No. 627	MSE wall face, wall No. __>30 ft (6 -9 m)	Per square foot (meter)
Item No. 627	Coping, A, wall No. ___	Per linear foot (meter)
Item No. 627	Coping, B, wall No.___	Per linear foot (meter)

Item No. 627	Traffic barrier, H, wall No.___	Per linear foot (meter)
Item No. 627	Traffic barrier, V, wall No.___	Per linear foot (meter)
Item No. 627	Additional MSE backfill	Per cubic yard (meter)

627.5.01 Adjustments

General Provisions 101 through 150.

Section 628—Permanent Soil Nailed Wall

628.1 General Description

Specifications for this work will be included elsewhere in the Contract.

Section 630—Modular Block Retaining Wall System

630.1 General Description

Specifications for this work will be included elsewhere in the Contract.

Section 631—Permanent Changeable Message Signs

631.1 General Description

Specifications for this work will be included elsewhere in the Contract.

Section 632—Portable Changeable Message Signs

632.1 General Description

This work includes furnishing, maintaining, transporting, and using Portable Changeable Message Signs according to these Specifications at locations shown on the Plans, in the Special Provisions, or as directed by the Engineer.

632.1.01 Definitions

General Provisions 101 through 150.

632.1.02 Related References

A. Standard Specifications

General Provisions 101 through 150.

B. Referenced Documents

MUTCD

NCHRP 350

QPL 82

632.1.03 Submittals

General Provisions 101 through 150.

632.2 Materials

General Provisions 101 through 150.

632.2.01 Delivery, Storage, and Handling

General Provisions 101 through 150.

632.3 Construction Requirements

632.3.01 Personnel

General Provisions 101 through 150.

632.3.02 Equipment

Use Portable Changeable Message Sign (PCMS) meeting the requirements of MUTCD, Section 6F.55 Portable Changeable Message Signs and the following:

A. Completed a full evaluation cycle (1-year) by National Transportation Product Evaluation Program (NTPEP).

B. Passed NTPEP durability test.

C. Has a control system with a keyboard to allow programming of user defined messages.

D. Have primary and backup power sources.

E. Capable of adjusting its brightness from daylight to night time conditions.

F. Capable of displaying 3 lines of legend.

G. Has a minimum reliability from its primary power supply for a minimum of 14 days for solar units (5 days for diesel units). Gasoline powered units not allowed.

H. Message displayed on the sign is visible for 3000 feet (915 m) and legible for not less than 650 ft (198 m) during both daytime and nighttime operation.

I. Is a self-contained unit including a control system with keyboard, primary and backup power source, mounting and transporting equipment (trailer mounted with all applicable lights and hardware).

J. Bottom of message sign panel is capable of being raised a minumun of 7 feet above the roadway.

K. Listed on QPL 82 as maintained by the Office of Materials or have a letter of approval from the Office of Materials before the sign is used on any portion of the worksite.

L. PCMS that remain the property of the Contractor may be either new or used provided the PCMS meets the requirements of this Subsection.

M. In addition to the alphanumeric combinations, the signs should include the capability to display directional arrow messages. A PCMS may be used as an arrow board display panel provided the PCMS meets the size and display requirement of a Type C panel as defined by the MUTCD, Section 6F.55 Portable Changeable Message Signs.

N. The PCMS has the following programmed as permanent messages:

1. /KEEP/RIGHT/ /
2. /KEEP/LEFT/ /
3. /TWO WAY/ TRAFFIC/AHEAD/
4. /ONE LANE/BRIDGE/AHEAD/
5. /MERGING/TRAFFIC/AHEAD/
6. /HEAVY/TRAFFIC/AHEAD/
7. /BUMP/AHEAD//
8. /PAINT/CREW/AHEAD/
9. /LOOSE/GRAVEL/AHEAD/

10. /SURVEY/PARTY/AHEAD/
11. /ICY/BRIDGE/AHEAD/
12. /ROUGH/ROAD/AHEAD/
13. /DO/NOT/PASS/
14. /LOW/SOFT/SHOULDER/ /
15. /SHOULDER/DROPOFF/ /
16. VEHICLES/CROSSING/ROADWAY/
17. /DETOUR/AHEAD/ /
18. /MERGE/RIGHT/AHEAD/
19. /MERGE/LEFT/AHEAD/
20. /TRAFFIC/ACCIDENT/AHEAD/
21. /TRAFFIC/SLOWS/AHEAD/
22. /ROAD/NARROWS/AHEAD/
23. /LEFT/LANE/NARROWS/
24. /RIGHT/LANE/NARROWS/
25. /LANE/NARROWS/AHEAD/
26. /LEFT/LANE/ /
27. /RIGHT/LANE/ /
28. /LEFT/SHOULDER/ /
29. /RIGHT/SHOULDER/ /
30. /CLOSED/AHEAD/ /

O. The PCMS is entirely mounted on a trailer that meets all of the requirements of the Georgia Vehicle Code. Additional trailer requirements:

1. The trailer and the components of the sign is designed to allow one person to perform all transporting and operating functions without assistance.
2. The trailer is designed for unlimited on-highway travel at 70 mph (110 kph).
3. The trailer has a minimum of four outrigger type leveling jacks, one at each corner of the trailer deck.
4. The jacks are mounted to allow them to swivel into a locked position for secure storage during travel.
5. The trailer and all mounted equipment are structurally adequate for unlimited normal operation in wind velocities up to 80 mph (130 kph).

632.3.03 Preparation

General Provisions 101 through 150.

632.3.04 Fabrication

General Provisions 101 through 150.

632.3.05 Construction

A. Utilization Requirements

1. When set up as a Pay Item in the Contract, utilize PCMS whenever any condition(s) exists that would require extra emphasis in warning motorists of a situation or at any location as directed by the Engineer. Furnish PCMS and have them available on a continuous basis.
2. Use PCMS on Interstate, limited access and multi-lane divided highways when any of these conditions exist:
   a. Workers or equipment operating with in 2 ft. (600 mm) of a travel lane without appropriate traffic control devices for positive barrier protection.

b. Excavation or other construction creates drop-offs adjacent to the edge of a travel lane and channelization devices are placed within the travel lane that is adjacent to the drop-off.

c. Material hauling in or out of a travel lane by hauling vehicles requires traffic to slow in the temporary traffic control zone.

d. Traffic is delayed by pacing all lanes for short periods of time for placing bridge beams, overhead sign structures, blasting, etc.

e. Any time that divided highway traffic is required to operate as two-way traffic condition and traffic is not separated by a positive barrier system.

f. One mile in advance of lane closure, place PCMS on outside shoulder denoting appropriate lane closure one mile ahead.

3. Use PCMS on all other types of roadways according to the the traffic control plan or as directed by the Engineer.
4. Locate the PCMS near the construction activity and display a message that is both concise and meaningful. Obtain the Engineer's approval for messages used on the PCMS.
5. Include the location of the PCMS and any message to be displayed on the PCMS in the approved traffic control plan required in Section 150-Traffic Control.
6. For emergency situations, PCMS that are smaller in size and do not have all of the capabilities outlined in this Specification, may be used until a PCMS that meets these requirements can be located and placed in operation at the site.

   The Engineer will determine when conditions and situations are to be considered emergencies and will regulate the length of time that non-specification PCMS may be used.

   Provide the Engineer written notification when non-specification PCMS signs are in use on the work.

B. PCMS Phase Messages

1. Messages are displayed in preferrably one phase but no more than two phases.
2. The first phase directs the motorist to take a specific action, such as MERGE/RIGHT, KEEP/RIGHT, OR REDUCE / SPEED.
3. The second phase, if necessary, is used to inform the motorist of road conditions such as LEFT/LANE/CLOSED; LANE/NARROWS/AHEAD; WATER/IN/ROAD; SHOULDER/DROP OFF; TRUCKS/IN AND/OUT.
4. Do not use messages such as USE/CAUTION; HAZARD/AHEAD; or DANGER which are confusing and give no guidance to the motorist. Also, do not use messages such as BUCKLE/UP or DRIVE/SAFELY which diminish the impact of important and relevant messages.

632.3.06 Quality Acceptance

General Provisions 101 through 150.

632.3.07 Contractor Warranty and Maintenance

Keep the units in good repair and neat and clean in appearance. If the unit fails, malfunctions, or is damaged, immediately repair the unit and furnish flaggers or other approved means to safely control the traffic until the units are back in service. Make repairs or replace the unit within 24 hours. Maintenance also includes periodically cleaning the units.

632.4 Measurement

Changeable message signs, complete with trailer and generating equipment, are measured by the unit.

632.4.01 Limits

General Provisions 101 through 150.

632.5 Payment

Changeable message signs, complete with appurtenances, will be paid for at the Contract Unit Price Per Each. Payment is full compensation for furnishing, using, and maintaining the signs for the duration of The Work. Each PCMS will be paid for only one time. The PCMS will remain the property of the Contractor.

Payment will be made under:

Item No. 632	Changeable message sign, portable, type3	Per each

632.5.01 Adjustments

General Provisions 101 through 150.

Section 633—Modification of Existing Signs

633.1 General Description

Specifications for this work will be included elsewhere in the Contract.

Section 634—Monuments and Road Markers

634.1 General Description

This work includes furnishing and erecting monuments, name plaques—special design, county line markers, and right-of-way markers.

634.1.01 Definitions

General Provisions 101 through 150.

634.1.02 Related References

A. Standard Specifications

Section 500—Concrete Structures

B. Referenced Documents

General Provisions 101 through 150.

634.1.03 Submittals

General Provisions 101 through 150.

634.2 Materials

Ensure that concrete is Class A or a mix approved by the Engineer that provides a cement factor of at least 5.85 CWT/yd³ (347 kg/m^3) of concrete. Use a test specimen cut from a monument or marker using the proposed concrete design and manufacturing method to prove the concrete meets a compressive strength of at least 2,000 psi (14 MPa) at 7 days.

Ensure that concrete is reinforced, free of honeycomb, has uniform surfaces, and meets the applicable requirements of Section 500.

All other materials used will be those specified on the Plans or in the Proposal.

634.2.01 Delivery, Storage, and Handling

General Provisions 101 through 150.

634.3 Construction Requirements

634.3.01 Personnel

General Provisions 101 through 150.

634.3.02 Equipment

General Provisions 101 through 150.

634.3.03 Preparation

General Provisions 101 through 150.

634.3.04 Fabrication

General Provisions 101 through 150.

634.3.05 Construction

Set the monuments and road markers in the ground to the depth shown on the Plans.

Use backfilling material of selected earth or gravel. Carefully tamp it in place so that the monument is stable and secure, when completed. Use a level to set it plumb in all directions.

Attach Name Plaques—Special Design to bridge end posts as shown on the Plans.

634.3.06 Quality Acceptance

General Provisions 101 through 150.

634.3.07 Contractor Warranty and Maintenance

General Provisions 101 through 150.

634.4 Measurement

The quantity to be paid for under this Item is the actual number of monuments, name plaques—special designs, road markers, Right-of-Way markers, and county line markers placed, completed, and accepted.

634.4.01 Limits

General Provisions 101 through 150.

634.5 Payment

These Items will be paid for at the price bid for each, complete in place.

Payment will be made under:

Item No. 634	Monuments	Per each
Item No. 634	Right-of-Way markers	Per each
Item No. 634	County line markers	Per each
Item No. 634	Name plaques—special design	Per each

634.5.01 Adjustments

General Provisions 101 through 150.

Section 635—Barricades

635.1 General Description

This work includes furnishing, installing, and maintaining timber barricade panels of the types called for on the Plans.

635.1.01 Definitions

General Provisions 101 through 150.

635.1.02 Related References

A. Standard Specifications

Section 860—Lumber and Timber

Section 862—Wood Posts and Bracing

Section 863—Preservative Treatment of Timber Products

Section 870—Paint

Section 913—Reflectorizing Materials

MUTCD

B. Referenced Documents

General Provisions 101 through 150.

635.1.03 Submittals

General Provisions 101 through 150.

635.2 Materials

Ensure that the materials conform to these Specifications:

Material	Section
Lumber	860.2.01
Posts	862.2.02
Preservative Treatment of Timber Products	863
Paint for Timber	870.2.04
Reflective Sheeting	913.2.01

635.2.01 Delivery, Storage, and Handling

General Provisions 101 through 150.

635.3 Construction Requirements

635.3.01 Personnel

General Provisions 101 through 150.

635.3.02 Equipment

General Provisions 101 through 150. Ensure that barricades meet the requirements of Section 3F.01 of the MUTCD.

635.3.03 Preparation

General Provisions 101 through 150.

635.3.04 Fabrication

General Provisions 101 through 150.

635.3.05 Construction

Use timber barricades to warn and alert drivers of the terminus of a road, street, or highway in a nonconstruction or nonmaintenance area. Install timber barricades where called for on the Plans or directed by the Engineer.

Ensure that the barricade rails are marked with alternate red and white stripes sloping downward at an angle of 45 degrees in the direction traffic is to pass. If the traffic may turn right or left, have the stripes slope downward in both directions from the center of the barricade.

Make the entire red-and-white striped area of retroreflectorized sheeting meeting Subsection 913.2.01. Other barricade components shall be white.

Ensure that the barricade has three rails as long as specified on the Plans.

Promptly clean, repair, or replace barricades that are damaged, defaced, or otherwise unfit at the Contractor's expense.

635.3.06 Quality Acceptance

General Provisions 101 through 150.

635.3.07 Contractor Warranty and Maintenance

General Provisions 101 through 150.

635.4 Measurement

Barricades are measured for payment by the overall length of the barricade, complete in place and accepted.

635.4.01 Limits

General Provisions 101 through 150.

635.5 Payment

Barricades as measured above will be paid for at the Contract Unit Price per linear foot (meter) of barricade. Payment is full compensation for furnishing materials, erecting the barricades, and maintaining them until Final Acceptance.

Payment will be made under:

Item No. 635	Barricades	Per linear foot (meter)

635.5.01 Adjustments

General Provisions 101 through 150.

Section 636—Highway Signs

636.1 General Description

This work includes fabricating and installing highway signs according to the details on the Plans and the Manual on Uniform Traffic Control Devices.

636.1.01 Definitions

General Provisions 101 through 150.

636.1.02 Related References

A. Standard Specifications

Section 500—Concrete Structures

Section 830—PortlandCement

Section 855—Steel Pile

Section 870—Paint

Section 910—Sign Fabrication

Section 911—Sign Posts

Section 912—Sign Blanks and Panels

Section 913—Reflectorizing Materials

Section 914—Sign Paint

Section 915—Mast Arm Assemblies

Section 916—Delineators

Section 917—Reflective and Nonreflective Characters

B. Referenced Documents

Manual on Uniform Traffic Control Devices

636.1.03 Submittals

Before fabricating overhead panel type signs, submit to the Engineer the Shop Drawings to approve the sign bracing and method of attaching to sign supports.

Before driving piles, furnish a list of proposed pile lengths to the Engineer.

636.2 Materials

Ensure that materials meet the requirements of the following Specifications:

Material	Section
Sign Fabrication and Accessories	910
Steel Sign Posts and Bolts (Drive Type)	911.2.01
Galvanized Steel Structural Shape Posts	911.2.02
Delineator Posts	
Galvanized Steel	911.2.04.A.4
Aluminum “U” Flange	911.2.04.A.5
Wood	911.2.04.A.6
Flexible	911.2.04.A.7
Aluminum Sign Blanks	912.2.01
Extruded Aluminum Sign Panels	912.2.02
Reflective Sheeting	913.2.01
Silk Screen Lettering Paint	914.2.01
Steel Posts and Arms for Mast Arm Assembly	915.2.01

Material	Section
Guy Wires for Mast Arm Assembly	915.2.02
Center Mount Reflector	916.2.01
Demountable Characters with Reflective Sheeting	917.2.01
Fittings, bolts, nuts, washers, clips, molding, etc., for panel signs shall conform to the requirements shown on the Plans.	
Class A Concrete Footings for Signs	500
Piling	855.2.03
Portland Cement	830.2.01
Sign Paint, Enamel	870.2.03

636.2.01 Delivery, Storage, and Handling

General Provisions 101 through 150.

636.3 Construction Requirements

636.3.01 Personnel

General Provisions 101 through 150.

636.3.02 Equipment

General Provisions 101 through 150.

636.3.03 Preparation

General Provisions 101 through 150.

636.3.04 Fabrication

General Provisions 101 through 150.

636.3.05 Construction

A. Finished Signs

Ensure that the finished signs are clear cut and that the lines of letters and details are true, regular, and free of waviness, unevenness, furry edges or lines, scaling, cracking, blistering, pitting, dents, or blemishes.

Only one type of demountable characters (letters, numerals, symbols, and borders) is permitted on special roadside signs on each Project.

B. Erecting the Signs

1. Drive Type Posts

   Drive type posts may be driven in place or placed in prepared holes.

   a. Use driven posts only in firm and stable soil. If the soil is sandy or unstable, place each drive type post in a prepared dry hole of at least a 4 in (100 mm) diameter.

   b. When placing posts in prepared holes:

      1) Backfill the holes with a mixture of damp, clean friable soil and 8 percent by volume Portland cement.

      2) Thoroughly tamp the mixture in place around the posts.

   c. Erect posts vertically as deep and at an angle to the roadway as shown on the Plans or as directed.

   d. Do not penetrate posts in the coastal plain region less than 4 ft (1.2 m) or 3 ft (1 m) for posts in the Piedmont and the Valley and Ridge Regions when no guard rail is present.

When erecting signs behind a guard rail, penetrate at least 3 ft (1 m) for posts 14 ft (4.2 m) or less long, or 4 ft (1.2 m) for posts over 14 ft (4.2 m) long.

2. Single-Plate Signs

   Erect single-plate signs 9 ft² (0.84 m²) or less on one drive-type post unless otherwise specified on the Plans.

   Erect single-plate signs greater than 9 ft² (0.84 m²) on two drive-type posts.

   Leave enough distance between the two posts to fit the mounting holes in the sign plate.

3. Steel Posts for Mast Arm Assemblies
   a. Erect steel posts for mast arm assemblies in a concrete foundation according to the Plans. Erect at the place, height, and angle to the roadway specified.
   b. After curing the concrete foundation for at least 24 hours, securely fasten the specified signs into place on the mast arm.
4. Ground-Mounted Panel-Type Signs
   a. Erect the supporting members of ground-mounted panel-type signs where shown on the Plans or as directed by the Engineer at the specified angle to the roadway.
   b. Securely fasten the panels into place.
5. Milepost Signs

   Erect milepost signs including posts as specified on the Plans.

6. Delineator Posts

   Use delineator posts made of galvanized steel, aluminum, or an alloy that conforms to the requirements of Subsection 911.2.04.A.4 or 911.2.04.A.5.
   a. Erect the posts where shown on the Plans.
   b. Mount reflectors for galvanized steel or aluminum posts on the flange side of the post.
   c. When signs are attached to supports, torque the bolts to at least 20 ft-lbs (27 N•m).
7. Overhead Panel-Type Signs

   Erect overhead panel type signs on sign supports where shown on the Plans or as directed by the Engineer.
   a. Ensure that the bottom of the sign is 18 in (450 mm) above the top of the lighting fixture.
   b. Ensure that the sign has ample bracing for mounting the sign support so that each sign can withstand 1 in (25 mm) of ice accumulated on the entire sign and wind pressures shown on the Plans.
   c. Ensure that the top of each sign is three degrees off perpendicular from the bottom of the sign. Use the three-degree slant to lean the sign toward the approaching traffic.

C. Foundations (for Special Roadside Signs)

Do not disturb the natural ground adjacent to a foundation more than necessary to construct the footing.

1. Excavate for the footings to the lines and elevations shown on the Plans or established by the Engineer. Do not disturb or loosen the foundation below these elevations.
2. Use forms of the necessary shape and dimensions to construct the footings to the lines and elevations shown on the Plans.
3. Cure the concrete foundations, constructed in conformance with Section 500 and the Plan details, at least 7 days before erecting the sign.
4. Ensure that the minimum lengths of steel H piling used in the foundations of ground-mounting signs are accepted and meet the Plan penetration requirements.

   The Plan quantity of steel H piling is shown for estimating purposes only; determine and provide the necessary lengths of piles.

5. Before driving the piles, furnish a list of proposed pile lengths to the Engineer.
   a. Use full-length piles or built-up piles with a maximum of two splices that are made in the presence of the Engineer.

b. Furnish satisfactory identification for all piles or portions thereof.

6. When rock prevents the penetration required on the Plans, construct according to the notes and details shown on the Plans.
7. The minimum energy ratings required by Section 520 for pile hammers will be waived for constructing ground-mounted sign supports. Jetting is not permitted.
8. Place required backfilling in layers no greater than 6 in (150 mm) thick and thoroughly compact it to the approximate density of the undisturbed soil in the area.

D. Sign Panels

Use extruded, panel-type aluminum. Ensure that the sign type used meets the requirements of Subsection 912.2.02.

E. Legends and Borders

Place legends and borders according to Subsection 917.2.01, “Demountable Characters”, with Type IX reflective sheeting.

636.3.06 Quality Acceptance

General Provisions 101 through 150.

636.3.07 Contractor Warranty and Maintenance

General Provisions 101 through 150.

636.4 Measurement

A. Type-1 or Type-2 Highway Signs

Type 1 or Type 2 highway signs with reflective sheeting of Type III, IV, or IX as specified on the Plans to be paid for are measured for payment by the actual number of square feet (meters) and fraction thereof of sign type and sheeting specified. The measurement includes providing the message and furnishing and placing signs complete and accepted. The Plan quantity will be the pay quantity.

B. Extruded Aluminum Panels

Extruded aluminum panels to be paid for are the number of square feet (meters) or portion of square feet (meters) furnished, including legend components, border material, fittings, nuts, washers, clamps, molding, etc., furnished, erected, completed, and accepted.

C. Galvanized Steel Posts

Galvanized steel posts, types 1, 2, 3, 4, 5, 6, 7, or 8 to be paid for are the actual number of linear feet (meters) and fraction thereof of the type specified, furnished, erected, completed, and accepted.

Galvanized steel to be paid for is the number of pounds (kilograms) furnished, erected, and accepted. Weights are computed from theoretical weights listed in the Plans for each post size. Base plates, connections, anchors, stub post, etc., are not measured for payment but are considered incidental to the Item.

D. Delineators

Delineators (reflectorized guide markers) to be paid for are the number of the type specified, including posts, rivets, and spacers, that are furnished, placed, and completed and accepted.

E. Mast Arm Assemblies

Mast arm assemblies to be paid for are the actual number furnished and erected, including concrete footing, sign, and post, completed and accepted.

F. Special Roadside Signs

Class A concrete for special roadside signs to be paid for are measured by the cubic yard (meter), neat measurement according to Section 500.5 “Payment.” No deductions are made for the volume of concrete displaced by steel piling, anchor bolts, or posts.

G. Portland Cement

Portland cement stabilized material used for backfilling holes is not measured for payment.

H. Steel H—Piling

Steel H—piling is measured for payment by the linear foot (meter) of accepted piling in place (signs), remaining in the completed work.

636.4.01 Limits

General Provisions 101 through 150.

636.5 Payment

Highway signs, galvanized steel posts, I-beam posts, delineators, mast arm assemblies, Class A concrete, and piling for signs are paid for at the Contract Unit Price for the various items. Payment is full compensation for furnishing and erecting the Item complete in place according to this Specification.

Separate payment will not be made for piling splices, the cost of cutting, or the cutoff portions. Pile cutoffs remain the Contractor’s property.

Piles eliminated due to authorized revisions will be paid for according to Subsection 109.06, “Eliminated Items.” These piles become Departmental property. Except for the above provision, no payment will be made for piles delivered to the Project that are not used in the work.

Payment will be made under:

Item No. 636	Highway signs, type 1 material, reflective sheeting type___,	Per square foot (meter)
Item No. 636	Highway signs, type 2 material, reflective sheeting type___,	Per square foot (meter)
Item No. 636	Galvanized steel posts, type ___	Per linear foot (meter)
Item No. 636	Galvanized steel structural shape posts	Per pound (kilogram)
Item No. 636	Highway signs, aluminum extruded panels, reflective sheeting type ___	Per square foot (meter)
Item No. 636	Plastic Flexible Delineator, type___	Per each
Item No. 636	Delineator, Type___	Per each
Item No. 636	Piling in place, signs, steel H, HP 12x53 (HP 310x79)	Per linear foot (meter)

636.5.01 Adjustments

General Provisions 101 through 150.

Section 637—Illuminated Sign System

637.1 General Description

This Specification describes the complete sign illumination system. Complete a secure installation according to the recommendations of the American Association of State Highway and Transportation Officials (AASHTO), the Illuminating Engineering Society, the standards of the National Electrical Code, and the applicable local ordinances.

For temporary overhead guide sign structures, except wire-supported signs, light the signs as soon as they are erected. Keep them lit during darkness until the temporary sign is no longer required.

The cost of temporary signs and electrical energy are included in the price bid for Section 150 when shown in the Proposal as a Pay Item. Otherwise, payment is as shown in Section 150. Ensure that illumination complies with Subsection 637.3.05.H, "Externally Illuminated Signs."

637.1.01 Definitions

The terms "cable" and "wire" are used synonymously in this Specification.

637.1.02 Related References

A. Standard Specifications

Section 150—Traffic Control

Section 500—Concrete Structures

Section 636—Highway Signs

Section 638—Structural Supports for Overhead Signs

Section 863—Preservative Treatment of Timber Products

Section 911—Sign Posts

Section 923—Electrical Conduit

B. Referenced Documents

NEC Section 370-18(c) in conjunction with NEC Section 250-42

ANSI C 80.1

EEI/NEMA publications

637.1.03 Submittals

Before purchasing materials or equipment, submit to the Engineer for approval a complete list of the products proposed for use. On the list, show the manufacturer's name and catalog number of each item to ensure compliance with the requirements of these Specifications. Include in this submittal the calculations or computer printouts for sign illumination and uniformity values.

Submit voltage drop calculations for each circuit to verify that proper voltage is furnished to the sign luminaires. Provide alternate equipment or a sample board to be activated for in-service evaluation, when the Engineer requires.

637.2 Materials

A. General Requirements

Have electrical material approved by the Underwriter's Laboratory or other acceptable testing agency. Provide the fittings, devices, materials, and Work to install the complete functional system. Use methods that comply with local ordinances, rules, and regulations. See Section 636 and Section 638.

B. Power Supply and Wiring

Use cable and wire of sufficient size to safely carry the capacity intended and to prevent the voltage from dropping more than 5 percent from the service point to the farthest light.

1. Determine Cable and Wire Sizes

   If the cable size is not specified on the Plans, determine the safe size after studying the Plans and Specifications.

   Wire and cable sizes as indicated below are for copper. Do not use aluminum wire unless otherwise noted on the Plans.

   Acceptable copper cable and wire sizes (commercial) are as follows:

No. 2/0 AWG	19 strand
No. 1/0 AWG	19 strand
No. 2 AWG	7 strand
No. 4 AWG	7 strand
No. 6 AWG	7 strand

   Use smaller wire sizes (No. 10 AWG minimum) on the sign structure only if it is adequately protected with fuses inside the handhole of the structural support. Ensure that the fuse rating is the same as the ampere rating of the wire, such as 30 A for No. 10 AWG wire.

   Do not reduce the wire size to a size that carries more than 80 percent of its rated amperage. If the number of luminaires on the sign structure is too many for No. 10 AWG wire, run two separate circuits from the base of the structural support to the luminaires. Fuse each of these separate circuits at the handhole of the sign structure.

2. Insulate Wire and Cable

   The neutral/ground wire shall have white insulation or mark it with strips of white tape at each access point.

   On the cable installed underground, use 600 V, type RHH/RHW/USE, 75 °C insulation. On the cable installed on the sign structure and connected to the luminaires, use 600 V, type RHH, XHHW, or THHN, 90 °C insulation.

   Install a waterproof boot, furnished by the fuseholder manufacturer, over each end of the fuseholder.

C. Power Control

When noted on the Plans, furnish and install a lighting contactor and a photoelectric control, complete with receptacle and accessories. Mount the photoelectric control near the top of the service pole so that it is exposed to the north sky. The control shall provide ON operation as shown in Subsection 637.2.I, “Photoelectric Controls.”

D. Grounding Rods

Use ground rods 5/8 in (16 mm) in diameter (± 1/16 in [± 1.6 mm]) and 8 ft (2.4 m) long unless otherwise specified on the Plans. Use ground rods that are galvanized steel. Ensure that the galvanization coating is at least 2 ounces/ft² (610 g/m²) according to the requirements of ASTM A 153/A 153 M.

E. Conduit

Use conduit approved by the Underwriters’ Laboratories, Inc.

1. Rigid Steel Conduit

   Use rigid steel conduit, including elbows and couplings, that conforms to American National Standards Institute Specification C 80.1.

   a. Protect rigid steel conduit by a uniform metallic zinc coating on the exterior and interior surfaces.
   b. Ensure that the conduit and coupling are galvanized at least 1.24 ounces/ft² (380 g/m²) (total of both surfaces).
   c. Determine the weight of the zinc coating according to ASTM A 90. If the Engineer elects, determine the thickness of the zinc coating by using a magnetic or electromagnetic thickness gage.

2. Nonmetallic Conduit

Unless otherwise noted, use Type II, schedule 40 (heavy wall) polyvinyl chloride (unplasticized) nonmetallic conduit that conforms to Subsection 923.2.02.

3. Flexible Conduit

   Ensure that the flexible conduit consists of a galvanized steel core and a polyvinyl chloride cover. Ensure that it contains a continuous copper ground and is liquid tight.

F. Circuit Breakers

Use quick-make and quick-break circuit breakers with a thermal magnetic molded case.

Use circuit breakers with the following characteristics:

- Over-the-center, toggle operating type with the handle positioned between ON and OFF to indicate automatic tripping
- Single handle and common trip multi-pole breakers
- Multi-pole breakers with a voltage rating 240 V or more from line to ground
- Bolt-on type with industrial rating and a minimum interrupting capacity of 10,000 RMS symmetrical amperes
- Lugs large enough to accommodate the cable used
- Lockable, weatherproof enclosure

G. Fuses and Fuseholders

Use fuses with the appropriate ampere rating and voltage rating for the operating voltage.

Use in-the-line and waterproof fuseholders.

H. Lightning Arresters

Use metal oxide varistor lightning arresters rated 650 V with the number of required poles unless otherwise specified. Provide a pole for each ungrounded leg of the service voltage.

I. Photoelectric Controls

Ensure that the photoelectric controls have a factory setting for turn-on at 1.5 foot-candles (16.1 lx) ambient light level.

Provide controls with a differential between turn-on and turn-off levels to prevent cycling at critical levels.

Use controls that meet these requirements:

- Operates on a supply voltage of 105 V to 130 V, 50/60 Hz, AC with an in rush rating of 120 A at 120 V and a lamp load rating of 1,000 W for incandescent and 1,800 V amperes for mercury vapor and fluorescent
- Contains built-in surge and lightning protection
- Has a rated life at full load of at least 5,000 on-off operations
- Withstands an ambient temperature range of –65 °F to 158 °F (-54 °C to 70 °C) and is moisture proof

Provide single-pole, single-throw (SPST), normally closed (NC) relay contacts. Ensure that the dielectric strength is at least 5,000 V between a current carrying part and the metal mounting surface.

The housing shall be approximately 2.25 in (57 mm) high with a base diameter of no more than 3.25 in. (83 mm).

The chassis shall be molded phenolic with three locking type blades and a neoprene gasket that conforms to EEI/NEMA publications. Mount the photoelectric control on an approved receptacle.

J. Lighting Control

Use lighting contactors specifically designed for use on tungsten and ballast (fluorescent and high-intensity discharge) lamp loads without derating. Use a contactor with these characteristics:

- The number of poles required to open each ungrounded conductor

- Lugs large enough to accommodate the cable used
- Lockable, weatherproof enclosure

K. Luminaires and Lamps

Use 400 W mercury luminaries with H 33-GL-400/DX lamps and a box-type configuration, unless otherwise specified. Mount on horizontal luminaire support channels.

Ensure that the luminaire contains:

- Integral regulator ballast and a prewired terminal board to connect the supply voltage
- Conduit openings on each side for through wiring
- Rain-tight housing made of aluminum with baked-on enamel finish
- Noncorrosive hardware
- Seals or gaskets at critical points to form a weathertight, breathing seal.
- Porcelain enclosed mogul socket, with spring loaded center contact and lamp grips, attached to ensure proper lamp positioning
- Lamp support on the end opposite from the socket to prevent the lamp from breaking from vibration
- Highly polished anodic-surfaced aluminum reflector and a removable, stippled, heat and shock tempered glass refractor
- Integral hinge system for the door that must be in a specified position to remove the door
- Detachable locking brace to hold the door open during maintenance
- Heavy-duty spring loaded latch on the front of the luminaire that produces a watertight seal between the door and housing when closed

Ensure that the luminaire support framework is designed to withstand wind and 1 in (25 mm) of ice accumulated on the entire framework as shown on the Plans.

Ensure that lamps are 400 W deluxe white mercury vapor and have 24,000 hours rated life at 10 hours per start.

L. Ballasts

Use regulator-type ballast that provides rated lamp watts to the lamp through a range in primary voltage of plus or minus 10 percent.

Use high-power ballasts with a power factor of at least 0.90 and enough open circuit voltage to start lamps at a temperature as low as -20 °F (-29 °C). Enclose ballasts for external or cabinet mounting in an epoxy-encapsulated covering.

637.2.01 Delivery, Storage, and Handling

General Provisions 101 through 150.

637.3 Construction Requirements

637.3.01 Personnel

A. Contractor Requirements

The person performing this work must be on the Department list of approved electrical contractors or electrical subcontractors.

B. Qualified Electrician

A qualified electrician has a Class II license issued by the Georgia State Construction Industry Licensing Board, has completed an approved four-year apprenticeship training program, and is classified as a Journeyman Electrician. The

qualified electrician shall show evidence of this classification to the Department Engineer in charge of the Construction. For further definition, see Subsection 755.1.01.

Always have a qualified electrician on the job site when pulling electrical wiring or making electrical connections.

637.3.02 Equipment

General Provisions 101 through 150.

637.3.03 Preparation

General Provisions 101 through 150.

637.3.04 Fabrication

A. Pull and Junction Boxes

Construct pull and junction boxes installed in the ground according to the design and dimensions, and at the locations shown on the Plans. Use a type approved by the Engineer.

1. Construct concrete boxes of Class A concrete meeting the requirements of Section 500, including precast concrete boxes.

   Manufactured units are permitted when the Engineer determines that they are equal in design, quality, and structural strength.
2. Provide cast iron, steel, or reinforced concrete covers as shown on the Plans for each pull or junction box.
3. Provide a drainage system for each ground-mounted box to keep water from accumulating inside the box.
4. Ground cast iron or steel covers used on electrical junction boxes or pull boxes as required by NEC Section 370-18(c) in conjunction with NEC Section 250-42.
5. Ensure that the pull and junction boxes mounted on bridges and the sign structure are waterproof, galvanized steel, stainless steel, or cast aluminum and conform to NEC requirements.
6. Seal conduit entrance holes in pull or junction boxes around the conduit to the Engineer's satisfaction.
7. Blank off unused entrance holes and openings for conduit to be extended by other Contractors with suitable plugs of plastic, bituminous fiber, or other approved material to prevent foreign matter from entering.

637.3.05 Construction

A. Fees and Permits

Pay the fees and permits required by power companies or governmental agencies.

Notify the power company at least 30 days before the power source connection is needed.

B. Power Supply and Wiring

Use a power supply of 120/240 V, 3-wire, single phase, with a supply point where the Department and the serving electric utility determine, unless otherwise noted. The supply point is usually near the right-of-way line near the sign location.

The sign lighting pay Unit includes setting a wooden service pole that meets the requirements of Section 863 near the edge of the right-of-way to receive the service from the utility company, unless otherwise indicated. Use at least a 30 ft (9 m) Class 5 pole or as shown on the Plans.

1. Install the metallic service riser with a weatherhead on the service pole and a weatherproof housing containing circuit breakers of the appropriate voltage and ampere rating.
2. When specified on the Plans, install a photoelectric control with the mounting hardware near the top of the service pole and a lighting contactor in a weatherproof housing on the service pole.
3. Ensure that the circuit breaker and lighting contactor have the number of poles required to open each ungrounded conductor.

Ensure that the circuit breakers and lighting contactors have proper lugs, sized for the cable to be used. Do not cut the cable strands to attach to the circuit breakers or lighting contactors.

4. Install an approved meter base in the service riser when required by the power company or indicated on the Plans.
5. Furnish and install an approved 650 V lightning arrester at the weatherproof enclosure and connect the arrester to the grounding system.
6. Furnish an approved padlock with two keys each for locking the weatherproof housings. Key the padlocks alike if more than one padlock is required on a Project.
7. Enclose the wiring on the sign framework in rigid galvanized steel conduit. Use liquid-tight flexible conduit in transition areas between rigid members. Do not splice cable or wire except in junction boxes.
8. Splice the conductors according to the National Electric Code and the splice manufacturer's recommendations. Splicing is subject to the Engineer's approval.
   a. Make splices only in junction boxes and pole bases unless otherwise shown on the Plans.
   b. Make the straight or line splices of conductors the same size with tin-plated copper compression tubular splices.
   c. Splice conductors of different sizes or different terminating directions by using tin-plated copper compression ring tongue terminals on each conductor. Bolt the terminals together with stainless steel or high-strength silicone bonze hardware.
9. Use lock nuts, pal nuts, or lock washers to keep the connection tight. Do not use split bolt connectors.
10. After splicing the conductor, insulate the splice with heat shrinkable tubing coated with adhesive on the inner wall supplied by the manufacturer.

    Select the shrink tube so that when it is applied over the connector it has an insulation thickness equal to or greater than the insulation thickness of the conductor used.

    Ensure that the heat shrinkable tubing is UL listed and meets ANSI C 119.1 (latest edition) requirements for submersible and direct buried splices.
11. When bolting connectors together:
    a. Wrap the bolted connection with cloth tape before applying the heat shrinkable tubing.
    b. Pad the sharp points and edges on splices to prevent the heat shrinkable tubing from splitting during shrinking.
    c. Position the shrink tubing so that at least 3 in (75 mm) of seal length ± 0.05 in (± 13 mm) is established on each side of the splice after the tube is fully recovered.
    d. Ensure that the spliced joints are watertight.
12. Include an approved 650 V lightning arrester inside the handhole of each structural support for illuminated signs.
13. Install in-the-line fuses in each ungrounded conductor inside the handhole of each structural support for illuminated signs.
14. Notify the power company at least 30 days before the connection to the power source is needed.

C. Power Control

The photoelectric control operates the lighting contactor that supplies power to the lighting circuit. If the supply voltage is other than 120/240 V, furnish and install a transformer in a weatherproof enclosure to provide 120 V control voltage.

1. Mount the circuit breaker, lighting contactor, and transformer, if required, in NEMA-3R lockable weatherproof cabinet(s) located on the service pole accessible from the ground.
2. Enclose the wiring to and from the photoelectric control in rigid galvanized conduit.

D. Grounding Rods

Install the grounding rods adjacent to each structural support foundation where the supply voltage enters and adjacent to the service pole.

1. Solidly connect to the grounding conductor the sign framework and metallic, noncurrent carrying materials in the lighting system.

2. Ensure that the neutral/grounding conductor is continuous and is connected to the luminaire housing, the ground rod at each structural support, and the ground rod at the service pole.
3. Drive the single ground rods vertically until the top of the rod is at least 12 in (300 mm) below the finished ground.
4. Use round rod clamps to attach a length of No. 6 AWG, bare solid, soft drawn or medium hard drawn copper ground wire to the ground rod. Connect it to the grounding point on the structural support.

   If penetration cannot be obtained in the above manner:

   a. Place a ground rod system consisting of 3 parallel ground rods at least 6 ft (1.8 m) center to center in a horizontal pattern and at least 12 in (300 mm) below the finished ground.
   b. Join these rods and connect them to the grounding point on the structural support with No. 6 AWG, bare solid, soft drawn, or medium-hard drawn copper ground wire and ground rod clamps.

E. Conduit, Boxes, Fittings, Circuit Breakers, Fuses, Wiring, and Supports

Furnish and install the conduit, boxes, fittings, circuit breakers, fuses, wiring supports, and accessories to complete the work for each circuit as required by the National Electrical Code.

F. Fuses and Fuseholders

Construct and install the fuseholder to retain the fuse on the load side if disconnected or broken apart. Install a waterproof boot, furnished by the fuseholder manufacturer, over each end of the fuseholder.

G. Lightning Arresters

House the lightning arrester in a watertight housing. Encapsulate or seal the lead entrance into the housing.

For units that are not factory sealed, apply silicone caulk to the lead entrance and install heat shrinkable tubing with precoated sealant on the interior surface over the lead entrance.

H. Externally Illuminated Signs

Ensure that the lighting system provides on the face of the signs at least 30 foot-candles (320 lx), average maintained, at 60 °F (15 °C) ambient temperature with a uniformity ratio (average/minimum) of no more than 3.5:1. Tilt the sign 3 degrees off perpendicular toward the pavement.

1. Luminaires and Lamps
   a. Mount luminaires so that the top of the luminaire is at least 18 in (450 mm) below the bottom edge of the sign and at a horizontal distance to provide uniform illumination.
   b. Extend the luminaires within 2 ft (600 mm) of the outside edge of the sign in each direction. The luminaire design will direct the longitudinal separation of luminaires.
   c. Support the luminaires and conduit runs with a framework of aluminum or hot dip galvanized steel channel solidly fastened to the structural support with galvanized steel or aluminum clamps. Do not drive holes into the structure.
   d. Ensure that luminaires are accessible from the maintenance walkway for maintenance and lamp replacement.
2. Ballasts

   Ensure that the ballasts for high intensity discharge (HID) or fluorescent lamps are integral with the luminaire housing or are in a separate weatherproof housing attached to the luminaire housing, unless otherwise specified. Use ballasts when using multiple circuits, unless otherwise specified, and when operating at voltages shown on the Plans.
3. Light Shield

   Provide a light shield plate made of 0.10 in (2.54 mm) thick, B-209 alloy 6061-T6 aluminum sheet 12 in (300 mm) wide and the combined length of the signs.

   Erect the shield below the signs at an elevation that will eliminate glare from the luminaires to motorists traveling in the opposite direction from the face of the sign. Mount the shield to the catwalk supports with U-clamps according to Section 911.

637.3.06 Quality Acceptance

The Department will accept luminous intensity using a color and cosine corrected lux meter. The Department will measure at random points by placing the meter flat against the surface of the sign with the light cell parallel to the face of the sign.

The maintained luxfoot-candle values will be calculated using depreciation factors of 0.75 for the luminaire and 0.70 for the lamp (combined value = 0.525) to provide a minimum of 30 foot-candles (320 lx) average maintained during the service life of the system.

A. Before Testing Period

Complete and energize each lighting circuit as early as possible. Before beginning the testing period, have an electrician with a megger, voltmeter, and ammeter perform the following tests in the presence of the Department Inspectors for each lighting circuit.

1. Before connecting the phase conductors to the source breaker, the sign structure, or the lighting standard wiring and lightning arresters, megger the circuit conductors to ensure that the phase conductors are free of grounds.
2. Test systems of 480 V at 1,000 V dc. Test systems less than 480 V at 500 V dc. The minimum acceptable reading is one megohm after the test voltage has been applied for 10 minutes. Test the system as follows:
   a. Before turning the circuit breaker on at the service point, measure the service voltage between the phase conductors and between each phase conductor and the neutral or ground.
   b. If the proper voltage is observed, turn the circuit breaker on. Wait 10 minutes for the luminaires to warm up and repeat the above voltage measurements.
   c. After energizing the circuit for at least 10 minutes, measure the load current in each phase conductor and the neutral at the service point. Ensure that the current in the phase conductors is balanced and no current is in the neutral.
   d. Record the test data in the Project records.

Final acceptance of the lighting system will be withheld for a 30-day testing period of continuous nightly automatic operation after the lighting work is complete or until other items in the Contract (except grassing) have been accepted, whichever occurs later. If a portion of this testing period occurs after Final Acceptance, other Work will not be charged against the Contract Time.

Correct defects in material or workmanship that occur during this 30-day period of continuous nightly automatic operation and until the Project is accepted, whichever occurs later. If defects are found during the 30-day test, continue testing it until achieving 30 days of continuous nightly automatic operation.

Assume the energy cost of each circuit or part of the circuit during this test period. Others will assume the energy costs after the successful 30-day test period.

B. After Testing Period

After the testing period and at the time of Final Acceptance, have an electrician with a voltmeter and ammeter perform the following tests in the presence of the Department Inspector for each lighting circuit.

1. Energize the circuit for at least 10 minutes and measure the service voltage between the phase conductors and between each phase conductor and the neutral or ground at the service point.
2. If the proper voltage is observed, measure the load current in each phase conductor and the neutral. Ensure that the current in the phase conductors is balanced and there is no current in the neutral.
3. Record this test data in the Project records.

637.3.07 Contractor Warranty and Maintenance

General Provisions 101 through 150.

637.4 Measurement

Each illuminated sign system completed and accepted at the location specified is measured for payment per Lump Sum.

637.4.01 Limits

General Provisions 101 through 150.

637.5 Payment

Each illuminated sign system measured for payment will be paid for at the Lump Sum price bid for each system. Price and payment is full compensation for furnishing and installing each complete and functional system, including designs when furnished by the Contractor, drawings, electrical apparatus and wiring specified, required excavation, backfill, concrete for conduits, and other materials, labor, equipment, and incidentals to complete the Item.

Structural supports for overhead highway signs will be erected and paid for separately according to Section 638. Signs will be paid for according to Section 636.

Payment will be made under:

Item No. 637	Illuminated sign system—sta.___	Per lump sum

637.5.01 Adjustments

General Provisions 101 through 150.

Section 638—Structural Supports for Overhead Signs

638.1 General Description

This item includes the materials, design requirements, fabrication, and erection of structural supports for overhead signs, including excavation, foundations, anchor bolt assemblies, backfill, redressing, and regrassing but exclusive of signs.

638.1.01 Definitions

Structural supports for overhead signs are defined generally as follows:

Type	Description
I	A SIGN BRIDGE type structure that spans the roadway with more than two horizontal chords supported by two columns, one at each end. Each column shall have at least two braced vertical members.
II	A CANTILEVER type structure with two or more horizontal chords supported by a single column at one end.
III	A BUTTERFLY type structure with two or more horizontal chords extending an equal distance in opposite directions from a single column.
IV	A COMBINATION (Bridge-Cantilever) type structure with more than two horizontal chords supported by two columns, only one at one end and one at an intermediate point. Each column shall have at least two braced vertical members.
V	A CANTILEVER type structure with a maximum of two horizontal chords supported by a single column at one end.
VI	A SIGN BRIDGE type structure that spans the roadway with a maximum of two horizontal chords supported by two columns, one at each end.
VII	A BRIDGE MOUNTED (attached to a highway bridge) structural frame.
VIII	A BUTTERFLY type structure with a maximum of two horizontal chords extending an equal distance in opposite directions from a single column.

Type II and V structures' maximum horizontal dimension shall be 32 ft (9.75 m). The horizontal dimension is measured from the column's centerline to the furthest point of the structure or sign.

Type III and VIII structures' maximum horizontal dimension shall be 25 ft (7.6 m). The horizontal dimension is measured from the furthest point of the structure or sign on one side to the furthest point of the structure or sign on the other side. Place the sign(s) on the structure to create a slightly unbalanced condition about the column’s centerline during wind loads.

Types V, VI, and VIII structural supports shall be used with flat sheet aluminum signs. If the vertical dimension of the largest sign is 42 in (1050 mm) or less, one horizontal chord may be used.

A walkway is required only when called for on the signing plans.

638.1.02 Related References

A. Standard Specifications

Section 207—Excavation and Backfill for Minor Structures

Section 500—Concrete Structures

Section 501—Steel Structures

Section 511—Reinforcement Steel

Section 645—Repair of Galvanized Coatings

Section 700—Grassing

Section 833—Joint Fillers and Sealers

Section 852—Miscellaneous Steel Materials

B. Referenced Documents

1994 Edition of AASHTO Standard Specifications for Structural Supports for Highway Signs, Luminaires and Traffic Signals,

AASHTO Standard Specifications for Highway Bridges

Current edition of the Manual on Uniform Traffic control Devices for Streets and Highways (MUTCD)

Current issue of ASTM Standards of the American Society for Testing and Materials

American National Standards Institute (ANSI)

American Petroleum Institute (API)

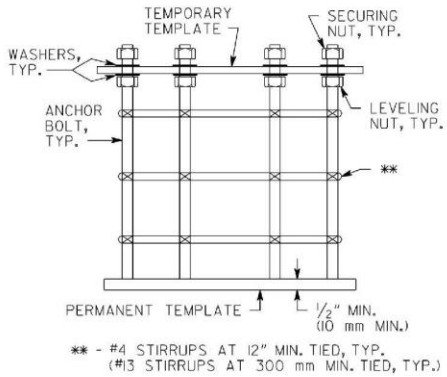

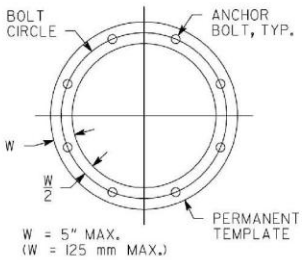

SECTION A-A

FIGURE 1

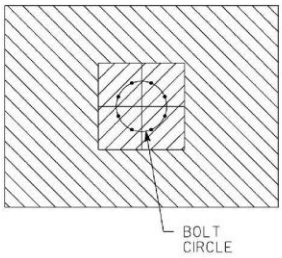

PLAN

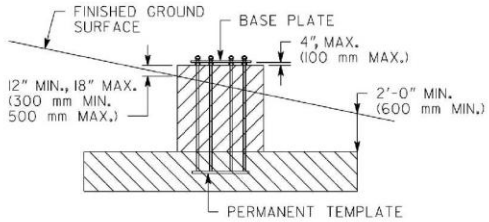

ELEVATION

LEGEND
STEM
FOOTING

REINFORCEMENT STEEL NOT SHOWN IN STEM AND FOOTING.

FIGURE 2

Current issue of AASHTO Standard Specification for Transportation Materials and Methods of Sampling and Testing

638.1.03 Submittals

Submit to the Engineer 6 sets of shop drawings [(12 in x 18 in (305 x 457 mm)] half size plan sheets) and 2 sets of design calculations [8.5 in x 11 in (216 x 297 mm)] sheets, neatly bound and indexed] for the Structural Supports, anchor bolt assemblies, and foundations for review and approval. Also send a copy of your transmittal letter to the State Traffic Operations Engineer.

Detail the shop drawings to permit replacement of all members and include all dimensions, construction tolerances, elevations at top and bottom of foundations, and sizes of members. The shop drawings shall include the material designations of the structure and of the hardware for attaching the sign, the lane delineation of the roadway under the structure, and the walkway. See Figure 1, Figure 2, and Figure 3.

A. Structural Supports

Design structural supports to use interchangeable components whenever feasible.

Design Type I, IV, and VI supports for 100% of the design sign area shown on the Plans and 100% of the wind pressure as calculated by the AASHTO Specifications for Structural Supports for Highway Signs, Luminaries and Traffic Signals.

Design bases for a minimum of four anchor bolts per column.

Design Type II, III, V, and VIII supports for 100% of the design area shown on the Plans and 150% of the wind pressure as calculated by the AASHTO Specifications for Structural Supports for Highway Signs, Luminaries and Traffic Signals. Design bases for a minimum of 8 anchor bolts per column.

Design Type VII supports for 100% of the design sign area shown on the Plans and 100% of the wind pressure as calculated by the AASHTO Specifications for Structural Supports for Highway Signs, Luminaries and Traffic Signals.

Type VII bridge mounted structural frames may be attached to concrete barrier, parapet, or deck or steel beams. Structural Supports shall not be attached to prestressed, post-tensioned, or reinforced concrete beams unless inserts were placed in beams during fabrication or construction. Make attachments to the concrete by bolting through the concrete or using chemical anchors. Mechanical anchors will not be allowed.

Attachments shall be flush on the traffic side of the concrete barrier, parapet, or deck. No attachments shall be welded to beams. When bolting to ASTM A 709 Grade 50W (A 709 M Grade 345 W) steel; bolts, nuts and washers shall be made from a steel that meets mechanical properties of ASTM A 325 (A 325M) and has weathering characteristics comparable and compatible to ASTM A 709 Grade 50W (A 709 M Grade 345W) steel. If the Structural Support is attached to a bridge beam, additional bracing will be required between the exterior beam and the first interior beam.

B. Walkways

When walkways are required by the signing plans, place walkways in front of the signs and extend them at least 1 ft (300 mm) outside of the edge of all overhead signs and at least 2 ft (600 mm) outside of the right edge of paving, or as directed by the Engineer. Provide walkways in front of the lower front chord, and do not locate a portion higher than the lowest part of any sign. Make the walkway continuous from end to end with a railing along the front side that can be folded down flush with the walkway when not in use.

C. Anchor Bolt Assemblies

Anchor bolt assemblies shall be of the proper length, area, and perimeter to transfer loads from the base plates to the foundations. The permanent template may be used in developing anchor bolts. Anchor bolts shall be at least 1-1/2 in. (38 mm) in diameter. Anchor bolt assemblies shall consist of a permanent template at the base, anchor bolts, leveling nuts, washers, temporary template, securing nuts, and #4 (#13) reinforcing bars.

The distance between the base plate and the top of the stem shall not exceed 4 in. (100 mm). Do not use grout between the base plate and the top of the stem. The anchor bolt shall project 1/4 to 1 in. (6 to 25 mm) above the securing nut. See Figure 1, Figure 2, and Figure 3.

D. Foundations

Unless otherwise required on the Plans, design foundations as spread footings with an allowable soil bearing pressure of 3 KSF (140 kPa). Do not allow calculated bearing pressure to exceed the allowable soil bearing pressure. No overstressing will be permitted. Drilled shaft foundation shall be used when called for on the Plans and will require a soil investigation report that shall be included with your submittal. Drilled shafts shall not be used with Type II and V structures.

Unless otherwise shown on the Plans:

- The top of the footing shall be at least 2 ft (600 mm) below the finished ground surface.
- The bottom of the foundation shall be placed on or below the original ground or on fill compacted to at least 95 percent of the maximum laboratory dry density according to Section 208.
- The clearance between the anchor bolt assembly and the stem reinforcement shall be 2-1/2 in (65 mm)minimum.
- One foundation per structure shall have a minimum of 2 in (50 mm) rigid, galvanized steel conduits stubbed up 6 in (150 mm) above the stem and capped a minimum of 3 ft (1 m) outside the footing and a minimum of 18 in (450 mm) below the finished ground surface for connecting to the underground power source or for future use.

638.2 Materials

Except for the Type VII structure, all structural members shall be tubular shapes. All materials shall meet the requirements of the applicable Specification. Do not use a material until the Office of Materials approves it.

Furnish one legible, reproducible copy of certified mill test reports including chemical analysis and physical test results covering steel and aluminum.

A. Aluminum Structures

Materials for aluminum structures shall comply with AASHTO Standard Specifications for Structural Supports for Highway Signs, Luminaries and Traffic Signals.

B. Steel Structures

All components of steel structures shall be galvanized in accordance with ASTM A 123/A 123 M or ASTM A 153/A 153 M, whichever is applicable. All components galvanized in accordance with ASTM A 123/A 123 M shall be quenched immediately upon removal from the zinc bath. If the contract plans require painting of the structural supports, the structural supports shall be painted with an approved paint system after galvanization.

- Structural steel, including base plates—Shall meet the requirements of the AASHTO Standard Specifications for Structural Supports for Highway Signs, Luminaries, and Traffic Signals.
- Steel pipe—Shall meet the requirements of ASTM A 53 Types E or S. Grade B; ASTM A 139 Grade B; ASTM A 252 Grade 2; API 5L-X42; or API 5L-X52. The hydrostatic requirements are waived. Other alloys of steel may be accepted if minimum yield strength of the material is less than or equal to 60,000 psi.
- Walkway and sign connection bolts including U-bolts—Shall meet the requirements of Subsection 852.2.

All other connections shall be made with high strength ASTM A 325 (A 325 M) bolts with washers and nuts meeting all the requirements of Subsection 852.2.

C. Anchor Bolts

Anchor bolts, nuts and washers shall meet the requirements of Subsection 852.2, or ASTM F 1554 (F 1554 M), A 563 (A 563 M) and F 436 (F 436 M), except that threads shall be rolled and shall be 8 UN/8 UNR thread profile according to ANSI B1.1). Bolts shall have Class 2A threads, and nuts shall have Class 2B threads.

The permanent template shall meet the requirements of ASTM A 709 Grade 36 or 50 (A 709 M Grade 250 or 345) or shall be an approved equal. Construct temporary templates from a material rigid enough to prevent any movement and misalignment of the anchor bolts.

D. Concrete Foundations

Class A concrete shall comply with Section 500.

Reinforcement steel shall comply with Section 853, Grade 60 (420).

E. Silicone Caulking Compound

Silicone caulking sealant shall comply with Subsection 833.2.06.A.1.a.1), “Type A.”

F. Neoprene

Neoprene, or its approved equal, shall be approved by the Office of Materials.

G. Ground Rods

Ground rods shall comply with Subsection 894.2.04.

H. Ground Wire

Ground wire shall comply with Section 922.

I. Threadlocker Adhesive

Threadlocker adhesive shall be an anaerobic threadlocking and sealing compound approved by the Office of Materials.

J. Rigid Steel Conduit

Rigid steel conduit shall be a 2 in (50 mm) rigid steel conduit meeting the requirements of Subsection 923.2.01.A.2

638.2.01 Delivery, Storage, and Handling

During shipment and handling, protect the metal components to prevent bending the components and damaging the galvanized coating.

Handle galvanized steel components with rope slings or other methods approved by the Office of Materials.

Do not use metal slings, chains, or hooks on galvanized surfaces.

Repair minor damage to galvanizing, as determined by the Engineer, according to Section 645. Extensive galvanizing damage is cause for rejection.

638.3 Construction Requirements

638.3.01 Personnel

General Provisions 101 through 150.

638.3.02 Equipment

General Provisions 101 through 150.

638.3.03 Preparation

A. Footings

Footings may be designed as spread footings with an allowable soil bearing pressure of 3 KSF (144 kPa). Include a soil investigation and report for other footings in the submittal.

1. Increase the allowable stress for group loading as given in Subsection 638.2.01. Disregard the gust factor.
2. The factor of safety in overturning shall be 1.15.
3. Unless shown otherwise on the Plans, extend the top of each footing at least 4 in (100 mm) above the ground. Place the footings to miss present and known future underground installations.
4. Stub at least two 2 in (50 mm) rigid, galvanized steel conduits up 6 in (150 mm) into the riser of one footing and cap at a distance of 3 ft (1 m) outside the foundation. Place the conduit at least 18 in (450 mm) below the ground level to connect to the underground power feed or for future use.

638.3.04 Fabrication

Fabrication of structural supports and anchor bolt assemblies shall be according to the approved shop drawings and the Plans. Only use fabricators of structural supports and anchor bolt assemblies that are listed on the Department's Qualified Products List as a qualified fabricator of structural supports and anchor bolt assemblies.

A. General

Use aluminum or steel supports for signs. Steel supports shall be galvanized after fabrication. Connections may be welded, bolted, riveted, or fastened by other means if the connecting method ensures adequate strength and does not distract from the aesthetics of the structure. Do not weld splice structural members.

Fabricate columns, chords, and struts from one piece of material by using one longitudinal seam weld. Bolted splicing of truss chords may be allowed if shown on approved shop drawings. Use struts to brace all truss chords.

Provide an electrical outlet on the front horizontal chord with a cover for connecting to the power source or for future use. Weld into the column near the base the column with the conduit in the foundation, a handhole assembly, curved on the front to follow the contour of the column. Ensure that the handhole reinforcing frame has a tapped hole to accommodate the grounding lug and secure a cover to the frame with at least two screws. The column shall have a J-hook wire support welded inside near the top.

Provide brackets for mounting signs. These brackets shall be adjustable to permit mounting the sign faces at any angle between a truly vertical position and three degrees from vertical. Obtain this three-degree angle by rotating the top edge

of the sign downward toward approaching traffic. All brackets shall be equal in length to the vertical dimension of the signs being supported.

B. Welding

All welding shall be done in the shop by current GDOT certified welders. The welders will weld the steel structures according to the latest AWS Structural Welding Code as modified by the GDOT Specifications and will weld aluminum structures according to Subsection 638.1.02.

C. Fabrication and Testing

Fabricate components in a jig or fixture to prevent distortion during and after welding and to ensure exact alignment at the time of erection.

Carefully check welds by visual and non-destructive inspection, by destructive testing of weld samples fabricated during welding, or by other methods approved by the Engineer. Sufficiently test weld samples to verify the reliability of production welding.

D. Galvanizing

After fabrication, thoroughly clean and galvanize all components of steel structures, including clamps and brackets, using the hot-dip process according to ASTM A 123/A123 M or ASTM A 153/A153 M, whichever is applicable.

Clean and galvanize interior and exterior surfaces of hollow sections. All components galvanized according to ASTM A 123/A 123 M shall be immediately quenched when removed from the zinc bath.

Galvanize Type VII bridge mounted structural frames except where the support is attached to weathering steel. When attached to weathering steel, fabricate the support of ASTM A 709 Grade 50W (A 709 M Grade 345W) steel or paint with an approved paint system to match the color of the weathering steel after galvanization.

638.3.05 Construction

A. Protection of Metal

During shipment and handling, protect all metal components to prevent damage to galvanized coatings. Handle galvanized steel components with rope slings or alternate methods approved by the Office of Materials before use. Do not use metal slings, chains, or hooks on galvanized surfaces.

Repair minor damage to galvanizing, as determined by the Engineer, according to Sections 645. Metal components will be rejected if they have extensive damage to galvanizing.

B. Foundations

For construction methods, see Sections 207, 500, and 511.

Chamfer the edges of the stems 3/4 in (19 mm). Stems shall have a Type III finish to at least 6 in (150 mm) below the finished ground surface unless otherwise noted on the Plans. The Engineer shall inspect the anchor bolt assembly installation before the placement of concrete. Complete the anchor bolt assembly installations so as to prevent movement during the concrete placement. Tolerance for the placement of anchor bolt assemblies shall be 3/8 in. (10 mm) horizontally and 1:20 (3 degrees) vertically. Do not remove the temporary template until the footing and stem concrete have been in place at least 24 hours.

The Office of Materials shall inspect the Type II and V sign structure footings before the column is erected. The OMR will perform a second inspection after the column is erected, and will also perform ultrasonic testing of the anchor bolts at this time. Type II and V sign structures will not be accepted until the footing inspections have been performed and approved.

C. Erection

Erecting the structure shall include placing and leveling a leveling nut on each anchor bolt. Use a washer with each leveling nut. Set the column on the washers without the horizontal structure, and place and tighten a washer and securing nut on each anchor bolt. Tightening is turning the nut an eighth of a turn after the nut is snug tight, and then applying the threadlocker adhesive.

After tightening, inspect the connections to ensure full bearing of the top and the bottom washers on the base plate and to ensure that the distance between the top of the stem and the bottom of the base plate does not exceed 4 in. (100 mm). No structure will be accepted if this dimension is greater than 4 in. (100 mm).

Attach the horizontal structure to the column with ASTM A 325 (A 325 M) bolts. Install ASTM A 325 (A 325 M) bolts according to Subsection 501.3.04.F, "High-Tensile Strength Bolt Connections." Do not reuse bolts and nuts after tightening them.

D. Type VII Bridge Mounted

Coat with silicone sealant all surfaces that are in contact with concrete. Separate with neoprene or an approved equal material all surfaces that are in contact with dissimilar metals.

E. Grounding

Install ground rods for each structural support adjacent to the foundation with the conduit as indicated below:

1. Vertically drive single, 8 ft (2.4 m) long ground rods until the top of the rod is at least 12 in. (300 mm) below the finished ground.
2. Attach a length of #6 bare copper, 7-strand wire to the ground with suitable ground rod clamps and connect it to the grounding nut of the column.
3. If sufficient penetration cannot be obtained in the above manner, place a ground rod system consisting of 3 parallel ground rods a minimum of 6 ft (1.8 m) center-to-center in a horizontal pattern and at least 12 in. (300 mm) below the finished ground. Join these rods and connect them to the grounding nut of the column with #6 bare copper, 7-strand wire and suitable ground rod clamps.

F. Finished Ground Surface

Ensure that the finished ground surface matches the typical section adjacent to the structural support. Do not adjust the ground surface around the stem to obtain 12 in (300 mm) minimum projection above finished ground surface.

638.3.06 Quality Acceptance

General Provisions 101 through 150.

638.3.07 Contractor Warranty and Maintenance

General Provisions 101 through 150.

638.4 Measurement

The quantity measured for payment shall be each structure type at the specified location completed and accepted. This shall include design, fabrication, and construction of structural supports including anchor bolt assemblies, foundations, excavation, backfill, redressing, and regrassing; but exclusive of signs.

638.4.01 Limits

General Provisions 101 through 150.

638.5 Payment

This item, measured according to Subsection 638.4, "Measurement," for each structural support for overhead highway signs, is paid for at the Lump Sum Contract Unit Price bid for the complete structure.

Payment will be made under:

Item No. 638	Structural support for overhead highway sign, type I–sta.___	Per lump sum
Item No. 638	Structural support for overhead highway sign, type II–sta.___	Per lump sum
Item No. 638	Structural support for overhead highway sign, type III–sta.___	Per lump sum
Item No. 638	Structural support for overhead highway sign, type IV–sta.___	Per lump sum
Item No. 638	Structural support for overhead highway sign, type V–sta.___	Per lump sum
Item No. 638	Structural support for overhead highway sign, type VI–sta.___	Per lump sum
Item No. 638	Structural support for overhead highway sign, type VII–sta.___	Per lump sum
Item No. 638	Structural support for overhead highway sign, type VIII–sta.___	Per lump sum

638.5.01 Adjustments

General Provisions 101 through 150.

Section 639—Strain Poles for Overhead Sign and Signal Assemblies

639.1 General Description

This work includes furnishing and erecting overhead sign and signal support strain poles and steel wire strand cable according to this Specification and the Plans.

Make concrete or steel strain poles at any one location within the Project from the same material unless the Plans designate a particular type for that location.

Use timber strain poles only where designated on the Plans.

639.1.01 Definitions

General Provisions 101 through 150.

639.1.02 Related References

A. Standard Specifications

Section 500—Concrete Structures

Section 636—Highway Signs

Section 647—Traffic Signal Installation

Section 852—Miscellaneous Steel Materials

Section 861—Piling and Round Timber

Section 863—Preservative Treatment of Timber Products

Section 865—Manufacture of Prestressed Concrete Bridge Members

Section 915—Mast Arm Assemblies

B. Referenced Documents

ASTM A 27 / A 27 M

ATSM A 36 / A 36 M

ASTM A 123 / A 123 M

ASTM A 153 / A 153 M

ASTM A 242 M

ASTM A 595

ASTM A 709(A 709 M)

639.1.03 Submittals

For steel and prestressed concrete strain poles, prepare drawings and other data that give the pole dimensions and design. Submit them to the Bridge Engineer for approval before beginning construction. See section 647.1.03 for additional design requirements for type IV strain poles.

Ensure that the total deflection of strain poles resulting from the dead load plus the live load is equal to or less than 2.5 percent of the pole height measured from the ground line to the point at which the load is applied.

639.2 Materials

Ensure that materials meet the requirements of the following Specifications:

Material	Section
Class A Concrete	500
Class B Concrete	500
Class AAA Concrete	500
Timber Poles	861.2.02
Seasoning and Preservative Treatment	863.2.01
Steel Wire Strand Cable	915.2.02
Guys and Anchors	Per Plans

A. Steel Strain Poles

Use shafts for steel strain poles fabricated of steel that conforms to one or more of the following:

- ASTM A 242/A 242 M
- ASTM A 709 Grade 50W (A 709 M Grade 345W)
- ASTM A 595
- AISI 1015
- AISI 1020
- SAE: 1015

Ensure that the steel characteristics or strength do not change significantly from welding.

1. Shaft

Use the appropriate shape of shaft which is a continuous taper and is constructed of corrosion resistant steel, unless otherwise specified, to the dimensions required for the specified classification type.

Form the shaft from one piece with one electrically welded longitudinal joint and no intermediate horizontal joints.

2. Pole

   Use a pole with a mill certified yield strength of at least 48,000 psi (331 MPa). After forming and welding the pole, the shaft may be longitudinally cold rolled under enough pressure to flatten the shaft to conform to the required yield strength. For Type IV steel strain poles, ensure that the wall thickness is at least 3 gauge or 0.25 in. (6 mm).

3. Traffic Signal Strain Poles (See section 647.1.03 for additional design requirements)

   Assemble traffic signal strain poles as follows:

   a. Weld a handhole assembly, curved on the front to follow the contour of the pole, into the shaft near the base.
   b. Include a tapped hole on the handhole reinforcing frame to accommodate the grounding lug.
   c. Secure the cover to the frame using at least two stainless steel screws.
   d. Weld a J-hook wire support inside near the top of the shaft for the poles.
   e. If an overhead power source is shown, use a clamp and clevis device to connect the wire to the pole and provide a weatherproof wire inlet close to the attachment. Conceal the other wiring to and from the controllers within the pole.

      For traffic signal strain poles with mounted controller cabinets and/or meter, provide 2, 2 in. (50 mm) half coupling wire inlet to mount the controller cabinet on the designated pole. Ensure that the location where cable enters the wire inlets at the top of the traffic signal strainpoles has a neat design and appearance. Do not use junction boxes at the top of poles to facilitate cable entrances.

4. Grounding

   Provide a 0.5 in (13 mm) approved grounding connector in the shaft. Equip the top of the shaft with a removable cap held securely in place.

   Hot-dip galvanize the shaft according to ASTM A 123/A 123 M unless otherwise specified.

5. Base

   Secure to the lower end of the shaft a one-piece cast steel base or a one-piece flat plate base that meets the requirements of ASTM A 27, Grade 65-35/A27 M Grade 450-240, or A 36/ A 36 M, as required.

   a. Ensure that the base, after welding, develops the full strength of the adjacent shaft section to resist bending.
   b. Attach the base to the concrete foundation with four bolts according to this subsection.
   c. Provide four removable cast or pressed steel ornamental covers with each base, and attach it to the base.

6. Anchor Bolts

   Furnish each pole with four anchor bolts of the size required in the manufacturer's Shop Drawings. Ensure that the anchor bolts meet the requirements of Subsection 852.2.02.

   Galvanize the threaded portions according to ASTM A 153/A 153 M and the Plan details.

B. Prestressed Concrete Strain Poles

Use shafts for these poles that comply with Subsection 865.2.01.B, except give the poles a steel trowel finish on the unformed side and any required pointing to eliminate air and water holes left by the steel forms. Use Class AAA concrete.

Use a marking tool to identify the pole class and height, or cast it with a die in the front face of the pole to produce letters and numbers at least 2 in (50 mm) high and wide.

C. Miscellaneous Hardware

Use hardware for steel and concrete strain poles with these features:

1. The steel required to fabricate other structural components is weldable and conforms physically and chemically to applicable ASTM specifications.

2. Nuts, bolts, and screws conform to these diameter requirements:
   - If diameters are less than 0.5 in (13 mm), the hardware is passivated stainless steel that meets the requirements of AISI 300, commercial grade.
   - If diameters are 0.5 in (13 mm) and larger, the hardware conforms to ASTM physical and chemical qualifications that ensure strength commensurate with the parts being connected. Galvanize the hardware according to ASTM A 153/A 153 M.
3. Use galvanized steel ground rods 5/8 in (16 mm) diameter, ± 1/16 in, (± 1.6 mm) and 8 ft (2.4 m) long unless otherwise specified.

   Ensure that galvanizing has a coating of at least 2 oz/ft² (610 g/m²) according to ASTM A 153/A 153 M.

D. Strain Poles for ATMS Applications

Provide poles for supporting CCTV, VDS, and microwave radar detection devices that meet the following design specifications:

- Designed to 80 mph AASHTO wind load requirements
- Limited to a live horizontal deflection at the top equal to or less than 1% of pole height in a 50 mph wind, with a design load of four static cameras and one movable camera.
- Torsional deflection limited to a 1 degree, maximum.

Install mounting brackets, as illustrated on the plans, which are galvanized steel and are compatible with the mounting design of the specified cameras and pan/tilt devices, and are affixed to the pole to prohibit rotation.

Install all wiring internal up to the camera mounting bracket with no external conduit on the pole.

Provide a weatherproof wiring access point or handhole on the pole.

639.2.01 Delivery, Storage, and Handling

General Provisions 101 through 150.

639.3 Construction Requirements

639.3.01 Personnel

General Provisions 101 through 150.

639.3.02 Equipment

General Provisions 101 through 150.

639.3.03 Preparation

General Provisions 101 through 150.

639.3.04 Fabrication

General Provisions 101 through 150.

639.3.05 Construction

A. Timber Poles

Construct the following according to the Plan:

1. Excavate the hole to the proper diameter and depth.
2. Erect the pole to an out-of-plumb position with its base resting on the bottom of the hole.

   Hold the pole in its out-of-plumb position until the cavity around the pole is filled and compacted.

B. Steel Poles

Construct the steel poles in accordance with the manufactures specifications.

C. Prestressed Concrete Poles

Drill round holes or dig square holes for prestressed concrete poles.

1. Do not disturb the natural ground adjacent to the foundation more than necessary to construct the foundation.
2. Excavate to the lines and elevations shown on the Plans or established by the Engineer.
   a. Dispose of the excavated materials as directed.
   b. Regrade and grass the disturbed areas to match the contiguous area.
3. Backfill according to the Plans. Furnish and place Class A concrete, as required, according to the applicable portions of Section 500 and Plan details.
4. When leaving lifting eyes or loops on the pole to facilitate handling and erecting, burn them off and patch them after erecting.

D. Ground Rods

Install ground rods for steel and prestressed concrete strain poles adjacent to the strain pole base as follows:

1. Vertically drive the single ground rods 8 ft (2.4 m) long until the top of the rod is at least 12 in (300 mm) below the finished ground.
2. Use exothermic weld or ground rod clamps as approved by the Engineer to attach a length of No. 6 AWG solid copper wire to the ground rod. Connect the wire to the grounding nut of the strain pole base.
3. When penetration cannot be obtained in the above steps, place three parallel ground rods at least 6 ft (1.8 m) center-to-center in a horizontal pattern and at least 12 in (300 mm) below the finished ground.

   Join the rods and connect them to the grounding nut of the pole base with No. 6 AWG solid copper wire and exothermic weld or ground rod clamps as approved by the Engineer.

E. Rake

Use the proper rake to erect the pole so that the pole will be plumb after the load is applied.

F. Erecting Cable

Follow these steps to erect the cable:

1. Install the top cable 6 in (150 mm) from the top of the pole, unless otherwise indicated on the Plans.
2. Install the bottom cable no more than 5 ft (1.5 m) from the top of the pole according to Plan details.
3. Secure the cable to each pole as shown on the Plans. Use preformed cable grips instead of cable clamps, if necessary.
4. Apply enough tension to pull timber poles toward each other past the plumb position by one degree. Minimum sag of 2.5%.

639.3.06 Quality Acceptance

General Provisions 101 through 150.

639.3.07 Contractor Warranty and Maintenance

General Provisions 101 through 150.

639.4 Measurement

Highway signs are measured and paid for under Section 636.

A. Treated Timber Poles

Treated timber poles of the class and length specified are measured by the number of units installed, including guys, anchors, and hardware.

B. Steel Cable

Steel cable of the specified size are measured by the linear foot (meter), complete in place.

C. Steel Strain Poles

Steel strain poles are classified and measured for payment by each unit and by type according to the following table:

Type	Span Length
I	Less than 60 ft (18 m)
II	60 to 95 ft (18 m to 29 m)
III	Greater than 95 ft (29 m)
IV	Traffic signal strain pole

D. Prestressed Concrete Strain Poles

Prestressed concrete strain poles are measured for payment by each unit and pole type as specified in the above table.

639.4.01 Limits

General Provisions 101 through 150.

639.5 Payment

A. Treated Timber Poles

Treated timber poles of the class and length specified will be paid for at the Contract Price bid per each. Payment is full compensation for poles, concrete encasements, excavation for pole and anchor holes, temporary pole alignment, bracing, guys, and items to complete the Work.

B. Steel Strain Poles

Steel strain poles of the type specified, complete in place and accepted, including backfill, erection, and necessary regrassing will be paid for at the Contract Unit price bid for each pole of each type.

C. Prestressed Concrete Strain Poles

Prestressed concrete strain poles of the type specified, complete in place and accepted, including backfill, erection, and necessary regrassing will be paid for at the Contract Unit Price bid for each pole of each type.

When neither concrete nor steel strain poles are specified, either type is acceptable. Measurement is specified in Subsections 639.4.C. or 639.4.D. The payment item is Strain Poles, Type___.

D. Steel Cable

Steel cable complete in place and accepted will be paid for at the Contract Unit Price bid per linear foot (meter) of each specified diameter. Payment is full compensation for furnishing and erecting the cable and for providing hardware including thimbles, but not hardware that is a part of the pole.

Payment will be made under:

Item No. 639	Treated timber pole class___, __ ft (m)	Per each
Item No. 639	Steel strain pole, type____	Per each
Item No. 639	Prestressed concrete strain pole, type___	Per each
Item No. 639	Strain Poles, Type___	Per each
Item No. 639	Steel strand wire cable___in. (mm)	Per linear foot (meter)

639.5.01 Adjustments

General Provisions 101 through 150.

Section 640—Retroreflectorized Railroad Cross Buck Sign

640.1 General Description

This work includes furnishing and erecting retroreflectorized railroad cross buck signs, including wood or steel posts and concrete bases for steel posts at locations shown on the Plans or as directed by the Engineer.

640.1.01 Definitions

General Provisions 101 through 150.

640.1.02 Related References

A. Standard Specifications

Section 500—Concrete Structures

B. Referenced Documents

Specifications of the Association of American Railroads

MUTCD

640.1.03 Submittals

General Provisions 101 through 150.

640.2 Materials

Use Class B or better concrete for steel posts that conforms to the dimensions and details shown on the Plans, and meets the requirements of Section 500. Ensure that the concrete surface is uniform and free of honeycomb.

Ensure that other elements of the sign conform to the requirements of the Specifications, or to the Specifications of the Association of American Railroads, whichever is indicated on the Plans.

640.2.01 Delivery, Storage, and Handling

General Provisions 101 through 150.

640.3 Construction Requirements

640.3.01 Personnel

General Provisions 101 through 150.

640.3.02 Equipment

General Provisions 101 through 150.

640.3.03 Preparation

General Provisions 101 through 150.

640.3.04 Fabrication

General Provisions 101 through 150.

640.3.05 Construction

A. Steel Post

Place a steel post as follows:

1. Set each steel post for a sign assembly in a concrete foundation according to the Plans.
2. Securely hold each post vertically until the concrete is strong enough to hold the post and sign without support.
3. Replace cracked bases.
4. Backfill around the bases with satisfactory materials.
5. Carefully tamp the backfill in place.

After setting the steel post, curing the concrete, and backfilling, fasten the cross buck sign to the post according to the details shown in the Plans.

B. Wood Post

Place a wood post as follows:

1. Place each post in a prepared dry hole at least 6 in (150 mm) diameter.
2. Backfill the hole with a mixture of Portland cement and damp clean friable soil using 8 percent cement by volume.
3. Thoroughly tamp the resultant mixture in place around the post.
4. Erect the posts vertically to the depth and at an angle to the roadway as shown on the Plans or directed by the engineer. The post shall penetrate the ground at least 4 ft. (1.2 m).

640.3.06 Quality Acceptance

General Provisions 101 through 150.

640.3.07 Contractor Quality and Maintenance

General Provisions 101 through 150.

640.4 Measurement

Retroreflectorized railroad cross buck signs are measured for payment by the number in place completed and accepted.

640.4.01 Limits

General Provisions 101 through 150.

640.5 Payment

Cross buck signs measured for payment will be paid for per each. Payment is full compensation for furnishing and erecting the Item complete in place according to the Plans and Specifications, and for providing materials and concrete, excavating, backfilling, and disposing of the surplus materials.

Payment will be made under:

Item No. 640	Retroreflectorized railroad cross buck signs, steel post	Per each
Item No. 640	Retroreflectorized railroad cross buck signs, wood post	Per each

640.5.01 Adjustments

General Provisions 101 through 150.

Section 641—Guardrail

641.1 General Description

This work includes furnishing and erecting guardrail and appurtenances according to the Specifications. Conform with the lines, grades, and locations shown on the Plans or as directed.

Place W-beam, T-beam, or "T" beam with modified offset block as shown on the Plans and in the Proposal. Unless designated otherwise, references to guardrail shall mean W-beam.

Unless provided for in the Plans, this work also includes:

- Grading to provide the "T" distance shown on the standard behind the guardrail
- Grading to construct shoulder flares for approved guardrail anchorage systems and widened shoulders along Guardrail runs according to Section 205 and
  Section 208
- Furnishing and setting additional posts (all lengths) together with the necessary offset blocks and hardware (when specified in the Plans or in the Proposal)

641.1.01 Definitions

General Provisions 101 through 150.

641.1.02 Related References

A. Standard Specifications

Section 205—Roadway Excavation

Section 208—Embankments

Section 645—Repair of Galvanized Coatings

Section 700—Grassing

Section 859—Guardrail Components

Section 870—Paint

B. Referenced Documents

General Provisions 101 through 150.

NCHRP 350

641.1.03 Submittals

General Provisions 101 through 150.

641.2 Materials

A. Steel Guardrail

Use steel Guardrail and steel posts unless specified otherwise on the Plans or in the Proposal.

B. Guardrail Auxiliary Items

Ensure that the guardrail includes auxiliary materials and Work to make connections and other guardrail or structures required to complete the construction indicated on the Plans.

C. Offset Blocks

Except at locations approved by the Engineer, use plastic offset blocks according to Subsection 859.2.05 “Plastic Offset Blocks” for “W” beam guardrail installation. Offset blocks for “T” beam guardrail installations shall be plastic, or modified steel offset blocks per the Standard Plans including Construction Details and Section 859. When approved by the Engineer, use treated wood offset blocks according to Subsection 859.2.04, “Wood Guardrail Posts and Offset Blocks.”only in isolated areas of “W” beam or “T”beam guardrail installations, where standard size blocks would not provide a satisfactory fit.

Wood offset blocks and/or wood posts may be specified within the limits of an approved anchorage terminal. Use only one type of offset block within continuous runs of guardrail except in transitions or where specified in the Plan details.

Ensure that materials meet the requirements of these Specifications:

Material	Section
Guardrail Elements and Fittings	859.2.01
Cable End Anchor Assembly	859.2.02
Steel Post and Offset Blocks	859.2.03
Wood Post and Offset Blocks	859.2.04
Plastic Offset Blocks	859.2.05
Galvanized Repair Compound	870.2.05

641.2.01 Delivery, Storage, and Handling

General Provisions 101 through 150.

641.3 Construction Requirements

641.3.01 Personnel

General Provisions 101 through 150.

641.3.02 Equipment

General Provisions 101 through 150.

641.3.03 Preparation

General Provisions 101 through 150.

641.3.04 Fabrication

A. Guardrail Anchorages, Mounting Devices, and Brackets

Fabricate and install guardrail anchorages, mounting devices, brackets, and other appurtenances according to the Plan details or as approved by the Engineer.

641.3.05 Construction

A. Erection of Posts

1. Wood guardrail posts shall not be used at any location except as required for guardrail anchorage.
2. Set the posts in post holes or drive them vertically at the positions, depth, spacing, and alignment shown on the Plans.
3. Install posts for Guardrail on bridges or other structures as detailed on the Plans.
4. Backfill post holes to the ground line with approved material tamped in place in layers of not more than 4 in (100 mm) thick.

5. If posts are driven, protect the tops of the posts with a suitable driving mat or cap. Remove and replace posts damaged during driving, at no additional cost.
6. Backfill the post holes that are drilled in rock as indicated on the Plans or directed by the Engineer.
7. Remove and reset posts that are out of alignment or too low in grade. Do not cut off posts that are too high; drive them to the proper elevation. Do not deviate more than 1/4 in (6 mm) vertical and horizontal post alignment.
8. Fit the posts with an offset block according to this Specification and Plan details.
9. Set additional posts and appurtenances, when required, according to the requirements of this Section and the Plan details.
10. When necessary to place posts in existing pavement, slope paving, etc., exercise extreme care in the cutting process, protect the adjacent areas, and remove all loose material. Cut holes in the existing paved area by drilling or sawing. Replace the pavement material in kind to the full depth of the original pavement, as directed, after the post is installed.

B. Erection of Rail

Erect the rails to attain a smooth, continuous rail line that conforms to the line and grade of the highway.

Determine the height of the rail from the dimensions shown on the Plans. Use bolts long enough to extend at least 1/4 in (6 mm) beyond the nuts after they are firmly tightened.

Install reflectorized washers on guardrail and anchorages. Where double faced guardrail is located on the inside shoulder of medians, install reflectorized washers only on the side which is nearest to traffic. In stall reflectorized washers according to this Specification and Plan details.

C. Damaged Spelter Coating

Repair damaged spelter coating according to the requirements of Section 645.

D. Guardrail Anchorages

Guardrail Anchorage Type 12 shall be any guardrail terminal, designed for use with “W” beam guardrail installations, which has been approved by the FHWA as meeting the requirements of the National Cooperative Highway Research Report 350, Test Level 3 (NCHRP-350, TL-3). Where the anchorage is connected to “T” beam guardrail installations, a transition is required as shown in the Standard details.

Construct Type 12 anchorages according to the manufacturer’s requirements except for the grading which will be as shown in the Plans and as directed by the Engineer. Obtain copies of the manufacturer’s details and installation instructions and provide copies of the same to the Engineer prior to the installation of the unit. Provide a FHWA letter of approval forNCHRP-350, TL-3 compliance of the terminal to be used as Type 12 anchorage.

Yellow and black nose striping, as shown on the Plans will be required on all Type 12 anchorages.

641.3.06 Quality Acceptance

General Provisions 101 through 150.

641.3.07 Contractor Warranty and Maintenance

General Provisions 101 through 150.

641.4 Measurement

A. Guardrail

Guardrail of the type specified is measured in linear feet (meters), including terminal sections when installed. Measurement does not include guardrail anchorage assembly.

When double faced guardrail of the type specified is installed, the single guardrail on each side of the posts is not measured separately. Each single rail is a component part of the double faced guardrail installation.

B. Guardrail Anchorage Assembly

This Item is measured by the number of each type installed according to the details shown on the Plans.

C. Guardrail Posts

All lengths of guardrail posts when shown in the Plans or Proposal as a separate payment Item are measured by the Unit.

641.4.01 Limits

General Provisions 101 through 150.

641.5 Payment

Guardrail, of the type specified, complete in place including posts, offset blocks, and hardware will be paid for at the Contract Price per linear foot (meter).

Guardrail anchorage assembly will be paid for at the Contract Price per each assembly, complete in place.

All lengths of guardrail posts when shown in the Contract documents as a separate Pay Item will be paid for at the Contract Unit Price. Payment is full compensation for furnishing the posts, offset block, hardware, and Work to complete the Item.

For Projects that do not include grading as a Pay Item, payment for guardrail and guardrail anchorage systems on shoulders includes:

- Embankment material for shoulders as shown on the Standard Details or Plans
- Compacting embankment material for shoulders to the approximate density of the surrounding soils
- Removing existing vegetation and obstructions before placing the embankment
- Grassing the reconstructed area according to Section 700

Payment will not be increased or decreased when wood offset blocks are added to or substituted for steel or plastic offset blocks.

Payment will be made under:

Item No. 641	Guardrail, type____	Per linear foot (meter)
Item No. 641	Double faced guardrail, type____	Per linear foot (meter)
Item No. 641	Guardrail for bridges, type____	Per linear foot (meter)
Item No. 641	Double guardrail for bridges, type____	Per linear foot (meter)
Item No. 641	Guardrail, Type T, Modified offset block	Per linear foot (meter)
Item No. 641	Guardrail anchorage, type___,	Per each
Item No. 641	Guardrail posts (all lengths)	Per each

641.5.01 Adjustments

General Provisions 101 through 150.

Section 642—Cable Barrier

642.1 General Description

Specifications for this work will be included elsewhere in the Contract.

Section 643—Fence

643.1 General Description

This work includes constructing fence and gates according to these Specifications where shown on the Plans or designated by the Engineer. Ensure that this work conforms with the lines and grades shown on the Plans. The fence types covered by these Specifications are:

- Chain-link
- Woven wire
- Barbed wire
- Field fence
- Barrier fence

643.1.01 Definitions

General Provisions 101 through 150.

643.1.02 Related References

A. Standard Specifications

Section 500—Concrete Structures

Section 645—Repair of Galvanized Coatings

Section 862—Wood Posts and Bracing

Section 863—Preservative Treatment of Timber Products

Section 894—Fencing

B. Referenced Documents

General Provisions 101 through 150.

643.1.03 Submittals

Furnish the Engineer, in duplicate, a materials certification for temporary barrier fence physical properties according to Section 106 of the Specifications.

643.2 Materials

Ensure that materials conform to the following Specifications:

Material	Section
Concrete (Class A or B)	500
Wood Fence Posts and Bracing	862.2.01
Metal Caps	862.2.01.A.5.
Preservative Treatment	863.2.01
Chain Link Fence (Fabric, Posts, Gates, and Accessories)	894.2.01
Woven Wire Fence (Fabric, Gates, and Posts)	894.2.02
Barbed Wire (including Posts)	894.2.03
Ground Rods and Connections	894.2.04
Field Fence	894.2.05

A. Chain-Link Fence

Use the fencing material shown in Subsection 894.2.01. Ensure that posts, fabric, wire, appurtenances, and gates when required, are the same or matching type for each Project, unless otherwise directed.

B. Woven-Wire or Barbed-Wire Fences

Use wood or steel post types as shown on the Plans. Ensure that each Project fence and post is the same type and shape, unless otherwise specified.

C. Temporary Barrier Fence

1. Use barrier fence fabricated from high-density polyethylene or polypropylene containing U.V. stabilizers
2. Ensure the barrier fence meets the following:
   a) Is free of manufacturing flaws
   b) Meets the following physical properties

Maximum Mesh Opening Size	1 ¾” (45 mm) x 2 1/8 “ (54 mm)
Roll Width	4 ft. (1.2 m)
Color	International Orange
Maximum Porosity	80%
Minimum Yield Strength (MD)	750 lb/ft (11 kN/m)

643.2.01 Delivery, Storage, and Handling

Do not store barbed-wire, woven-wire fence fabric, steel posts, hardware, and other materials on the ground. Place them in floored buildings, on platforms, or on wooden timbers or poles. Ensure that the floors, platforms, or props are high enough to prevent the wire and steel posts from touching ground or surface water.

Wire or steel posts that are damaged from improper storage between fabrication and final erection will be rejected.

643.3 Construction Requirements

643.3.01 Personnel

General Provisions 101 through 150.

643.3.02 Equipment

General Provisions 101 through 150.

643.3.03 Preparation

General Provisions 101 through 150.

643.3.04 Fabrication

General Provisions 101 through 150.

643.3.05 Construction

Construct fence (except for field fence) within the right-of-way line. Do not allow the permanent installation to encroach on adjacent property.

A. General Fencing Requirements

Follow these general requirements when placing the fence:

1. Construct the fence to follow the contour of the ground. Place the bottom of the fence fabric at least 1 in (25 mm) from the ground surface, but no more than 6 in. (150 mm).

2. Clear the fence line a maximum of 8 ft (2.4 m) wide and grade where necessary to provide a neat appearance.
3. When the ground profile in low areas changes abruptly, use longer posts to maintain the ground clearance. Stretch multiple strands of barbed wire on the posts with 6 in (150 mm) or less vertical clearances between strands of barbed wire.
4. Connect the existing cross fences to new fencing, except for obviously unserviceable fences.
5. Place corner or end posts, whichever is appropriate, at the junction with existing fences and fasten the wires in the new and existing fences to the posts.
6. Install corner or pull posts for new fencing without placing tension on existing fence posts. At structures, fasten new fencing to end posts to permit livestock to pass through or under the structure freely, unless otherwise directed or shown on the Plans.

B. Posts and Appurtenances

Follow these steps to install posts and appurtenances:

1. Place and install the posts as shown on the Plans. If the soil is Class I, II, III, or V, drive "C" and 2-3/8 in (60 mm) tube-type line posts for all fence types at least 3 ft (900 mm) deep instead of using concrete encasement.
2. Encase in concrete line posts installed in marshy or swampy areas (Class IV soils). Install posts in rock according to this subsection.
3. Encase the corner, end, and pull posts in concrete as shown on the Plans.
4. Replace posts damaged by driving. When posts are set in concrete, fill the entire hole around the post with Class A or B concrete.
5. Hand mix concrete for batches of 1/2 yd^3 (0.5 m^3) or less. Firmly brace the posts and hold them in place until the concrete has set.
6. Ensure that the distance between the end, pull, and corner or angle post assemblies does not exceed the following:

For chain-link fence, straight line	500 ft (150 m)
For chain-link fence, curved line	250 ft *(75 m)
For woven-wire fabric	330 ft (100 m)
Field fence	330 ft (100 m)

7. On end, pull, and corner or angle post assemblies for woven-wire fence, add additional approach posts for greater stability when necessary or as directed by the Engineer.
8. Set posts placed on concrete walls, slabs, or solid rock in round holes 6 in (150 mm) deep or as indicated on the Plans.
9. Fill the space around the post with molten lead or a cement filler approved by the laboratory.
10. Repair the posts after cutting or drilling. Repair galvanized steel posts according to Section 645. Repair other metal posts according to the manufacturer's recommendations.
11. Treat timber posts and braces with a preservative coating of the type specified in Subsection 863.2.01.

C. Fence Erection

Install fence fabric or barbed wire when posts are set and braced, except when posts are set in concrete footings.

When posts are set in concrete footings, delay installing the fabric or wire to allow the concrete to cure at least 5 days. When barbed wire fence is required, install three strands unless otherwise indicated on the Plans.

D. Gates

Ensure that the gate assemblies are the length, height, and type designated on the Plans. Install the gate to provide a 180-degree swing.

Weld the gate frames into units. Properly coat them after welding according to Section 894.

Stretch fabric that matches the fence fabric taut over the gate frame. Provide gate assemblies with a positive-type locking device, padlock, and keys.

E. Electrical Ground

Wherever a power line carrying more than 600 volts passes over the fence, install a ground rod.

1. Install the ground rod at the nearest point directly below the point of crossing.
2. Where possible, drive the rod into the ground for a full 8 ft (2.4 m) of penetration.
   a. In rocky soil, drive the rod slanted to provide 18 in (450 mm) of cover at the tip.
   b. In solid rock, install two ground rods at the nearest post on each side of the power line crossing where soil conditions will permit.
3. Use clamps to attach a length of No. 6 AWG bare copper, 7-strand wire between the fence and the ground rod.

F. Trespassing on Private Property

To trespass on private property outside the right-of-way or easements provided on the Plans, obtain permission from the property owner for the intrusion.

Use field fence for replacing fence outside the right-of-way or for providing temporary fence at locations shown on the Plans or directed by the Engineer. Field fence is considered permanent unless it is specified as temporary.

G. Maintaining Livestock

Construct the fence to prevent livestock from escaping. Schedule fence removal and new fence installation to provide continuous security of the livestock. If security is not maintained and animals or property are damaged or lost, compensate the owner or make repairs at no cost to the Department. Replace or repair damaged existing fences.

H. Temporary Barrier Fence

Install the barrier fence according to the manufacturer's instruction. Use suitable strength metal, wood, or composite posts. Ensure the posts are long enough to be embedded to a depth that will provide stability to the fence have sufficient rigidity to hold the fence in a vertical position.

The maximum post spacing is 10 ft (3 m). Attach the fence to the posts with nails, staples, or wire ties spaced every 6 in. (150 mm) along the posts. Do not allow the method of attachment to create a safety hazard.

At the completion of the project, or as directed by the Engineer, remove all barrier fence including posts and incidentals.

643.3.06 Quality Acceptance

Repair rusted wire or posts before Final Acceptance, or remove and replace with new material at the Contractor’s expense. Do not replace the fence if rusting occurs as a result of ponding water after the fence is erected.

643.3.07 Contractor Warranty and Maintenance

General Provisions 101 through 150.

643.4 Measurement

Fence will be measured by the linear foot (meter) along the bottom of the fence, from the outside of end posts for each continuous run of fence. Measurement for payment includes posts, post assemblies, pull, corner, and gate posts, and gates unless gates are a separate Pay Item.

When gates are paid for separately they will be measured as complete Units of the type and size specified and installed.

Temporary barrier fence will be measured by the linear foot (meter) along the bottom of the fence outside of end posts for each continuous run of fence.

643.4.01 Limits

General Provisions 101 through 150.

643.5 Payment

The accepted quantities of fence, measured as indicated above, will be paid for at the Contract Unit Price per linear foot (meter) of the specified type and height of fence. Payment includes gates unless the gates are paid for separately.

The accepted quantity of gates, when listed as a separate Pay Item, will be paid for at the Contract Unit Price for each type and size of gate specified, complete in place, including posts and hardware, locks, keys, and other incidentals shown on the Plans.

Payment includes clearing and grubbing, grading, excavating, backfilling, disposing of surplus materials, and furnishing materials and incidentals such as molten lead or cement filler on concrete walls, slabs, or solid rock to complete the work.

When field fencing is temporary, payment includes removal. Materials salvaged from temporary field fence remain the Contractor's property.

The accepted quantities of temporary barrier fence measured as indicated above will be paid for at the Contract unit price per linear foot (meter) of fence. Payment to complete the item includes all necessary clearing, installation of fence including hardware and other incidentals, and removal of the fence. The barrier fence, posts, and all incidentals become the property of the Contractor upon removal.

Payment will be made under:

Item No. 643	Field fence, woven wire	Per linear foot (meter)
Item No. 643	Field fence, barbed wire (strand)	Per linear foot (meter)
Item No. 643	Field fence, special design	Per linear foot (meter)
Item No. 643	Chain-link fence (type___), (height___) in (mm), wire gauge___	Per linear foot (meter)
Item No. 643	Chain-link fence (type___), (height___) in (mm), wire gauge___, with extension arms and barbed wire	Per linear foot (meter)
Item No. 643	Woven-wire fence	Per linear foot (meter)
Item No. 643	Barbed-wire fence (strand)	Per linear foot (meter)
Item No. 643	Gate (fence type,___) (size___)	Per each
Item No. 643	Barrier fence, height,____ ft (m)	Per linear foot (meter)

643.5.01 Adjustments

General Provisions 101 through 150.

Section 645—Repair of Galvanized Coatings

645.1 General Description

This work includes field repairing damaged galvanized coatings, except coatings on wire and chain-link wire fence.

When galvanized materials are welded, the work applies to the welded area and to the damaged areas adjacent to the weld. It does not apply to new materials deficient in coating.

645.1.01 Definitions

General Provisions 101 through 150.

645.1.02 Related References

A. Standard Specifications

Section 870—Paint

B. Referenced Documents

General Provisions 101 through 150.

645.1.03 Submittals

General Provisions 101 through 150.

645.2 Materials

Use material for repairing galvanized coatings that conforms to the following:

Material	Section
Galvanizing Repair Compound	870.2.05

645.2.01 Delivery, Storage, and Handling

General Provisions 101 through 150.

645.3 Construction Requirements

645.3.01 Personnel

General Provisions 101 through 150.

645.3.02 Equipment

General Provisions 101 through 150.

645.3.03 Preparation

Before applying repair compounds:

1. Clean the area of grease using an approved solvent recommended by the producer of the galvanizing repair compound.
2. Thoroughly brush the area with a stiff wire brush to remove dirt, loose galvanizing, welding slag, or other foreign material.

645.3.04 Fabrication

General Provisions 101 through 150.

645.3.05 Construction

Apply the repair compound smoothly and evenly with a moderately filled paint brush when the temperature of the steel, compound, and surrounding air is above 45 °F (7 °C). On smooth surfaces, ensure that the minimum dry film thickness is 2 mils (0.05 mm).

On rough and pitted surfaces, the Engineer may require more than one coat. When additional coats are required, allow a drying time of at least four hours between coats. Do not brush over partly dried applications.

645.3.06 Quality Acceptance

General Provisions 101 through 150.

645.3.07 Contractor Warranty and Maintenance

General Provisions 101 through 150.

645.4 Measurement

This work will not be measured separately for payment.

645.4.01 Adjustments

General Provisions 101 through 150.

645.5 Payment

This work shall be performed at the Contractor's expense.

645.5.01 Adjustments

General Provisions 101 through 150.

Section 647—Traffic Signal Installation

647.1 General Description

This work consists of furnishing materials and erecting a traffic signal installation including all traffic signal equipment, poles, bases, wires and miscellaneous materials required for completion of the installation. Ramp Meters are defined as a form of traffic signalization and all general provisions for traffic signalization are applicable unless otherwise noted in the Plans and Specifications.

It also includes all test periods, warranties and guarantees as designated in subsequent sections, and response to maintenance and operational issues as described in subsequent sections.

Apply for, obtain and pay for all utility services, communications services to, and pole attachment permits required by all utility owners that are necessary for the signal installation and operation required in the Plans. The Contractor will be responsible for establishing utility services and ongoing monthly costs related to utility services until final acceptance of the signal project.

Upon completion of a successful "burn in" or operational testing period for the signal installation, the Contractor will be responsible for an orderly and uninterrupted transfer of these services and permits to the local government or other jurisdiction that will be responsible for subsequent maintenance and operation.

647.1.01 Definitions

General Provisions 101 through 150.

647.1.02 Related References

A. Standard Specifications

Section 106—Control of Materials

Section 107—Legal Regulations and Responsibility to the Public

Section 108 —Prosecution and Progress

Section 150 —Traffic Control

Section 500—Concrete Structures

Section 501—Steel Structures

Section 535—Painting Structures

Section 615—Jacking or Boring Pipe

Section 631—Changeable Message Signs

Section 636 – Highway Signs

Section 639—Strain Poles for Overhead Sign and Signal Assemblies

Section 645—Repair of Galvanized Coatings

Section 680—Highway Lighting

Section 681—Lighting Standards and Luminaires

Section 682—Electrical Wire, Cable, and Conduit

Section 700—Grassing

Section 755—Electrical Work

Section 800—Coarse Aggregate

Section 801—Fine Aggregate

Section 832—Curing Agents

Section 833—Joint Fillers and Sealers

Section 850—Aluminum Alloy Materials

Section 852—Miscellaneous Steel Materials

Section 853—Reinforcement and Tensioning Steel

Section 854—Castings and Forgings

Section 861—Piling and Round Timber

Section 870—Paint

Section 886—Epoxy Resin Adhesives

Section 910—Sign Fabrication

Section 911—Steel Sign Posts

Section 912—Sign Blanks and Panels

Section 913—Reflectorizing Materials

Section 915—Mast Arm Assemblies

Section 922—Electrical Wire and Cable

Section 923—Electrical Conduit

Section 924—Miscellaneous Electrical Materials

Section 925—Traffic Signal Equipment

Section 926 – Wireless Communication Equipment

Section 927 – Wireless Communication Installation

Section 935—Fiber Optic System

Section 936—CCTV System

Section 937—Video Detection System

Section 939—Communications & Electronic Equipment

Section 940—Navigator Integration

B. Referenced Documents

National Electrical Manufacturers Association (NEMA) Traffic Control Systems Standards No. TS 1

NEMA Traffic Control Systems Standards No. TS 2

AASHTO Roadside Design Guide

The Manual on Uniform Traffic Control Devices (MUTCD), current edition

National Electrical Code

National Electrical Safety Code (NESC)

GDT 7 Determining Maximum Density of Soils

GDT 24a Determining the Theoretical Minimum Dry Density of Soils or Soil Aggregates containing > 45% Retained on the No. 10 Sieve

GDT 24b Determining the Theoretical Minimum Dry Density of Soils or Soil Aggregates containing > 5% Retained on 2-Inch Sieve using a 5.5 Pound Rammer and a 12 Inch Drop

GDT 67 Family of Curves Method for Determining Maximum Density of Soils

647.1.03 Submittals

Use only equipment and materials that are on the Department's Qualified Products List (QPL).

These products have been evaluated by the Office of Traffic Operations and have proven their capability of meeting the appropriate Georgia Department of Transportation Specification. Any of these products may be used without sampling or pre-testing. The Contractor shall submit a letter to the Field Engineer, stating which QPL items they will use. Submittal letter shall include QPL number, and product description. The Field Engineer and/or department designee must ascertain that the construction item is the same material identified on the appropriate QPL and will acknowledge receipt of these items in the project diary or as required by the Construction manual.

Written approval is required from the State Traffic Engineer or District Engineer prior to beginning any work on the traffic signal installation and /or installing the proposed on the work site.

A. Review

For all traffic signal material submittals, the Engineer's review of the material should be completed within forty five (45) days from the date of receipt of the submission unless otherwise specified. The State Traffic Engineer or District Engineer will advise in writing, as to the acceptability of the material submitted.

The State Traffic Engineer or District Engineer may determine that submitted equipment is approved, in which no further action is required. In the event, materials submitted for use are rejected the Contractor is required to re-submit materials, within fifteen (15) days of notification of material failure or rejection. Resubmittal of subsequent materials for review will be considered the start point of a new approval cycle as described.

The Department reserves the right to be reimbursed by the Contractor for reviewing any equipment and/or component submittals after a second submittal of equipment proposed for use on the project.

B. Submittal Costs

No separate measurement or payment will be made for submittal costs. All costs associated with reproduction of submittal material documents, samples and mailing expensed will be the responsibility of the Contractor and are not subject to reimbursement by the Department. All submittal material becomes the property of the Department and will not be returned to the Contractor.

C. Steel Strain Pole, Concrete Strain Pole or Steel Pole Certification

Instruct the supplier or manufacturer of the strain poles or steel poles with traffic signal mast arms to submit a certification, including mill certificates to:

Department of Transportation
Office of Materials
15 Kennedy Drive
Forest Park, Georgia 30297

Include the following in the certification:

- A statement that the items were manufactured according to the Specifications, including the Specification Subsection number
- Project number and P.I. number

Instruct the supplier or manufacturer to send copies of the transmittal letter to the Engineer.

Prepare Shop Drawings and related signal strain pole design calculations with the following criteria, 5% sag and 18 foot signal head height. Provide "bending moment at yield" to determine the foundation size according to the signal strain pole foundation drawings. Submit all Shop Drawings and related signal strain pole design calculations to the Traffic Engineer. The Traffic Engineer will forward to the State Bridge and Structural Design Engineer for review and approval. Obtain written approval prior to pole fabrication and installation. Upon acceptance of the pole certification provide one copy of the design calculations and shop drawings to the agency responsible for maintaining the traffic signal installation.

All pole drawings shall include roadway and pole elevations.

Show all dimensions and material designations of the designs on the Drawings. See Subsection 501.1.03 for the certification procedure for poles and anchor bolts.

D. Signal Item Certification

Only equipment and/or material on QPL shall be submitted for certification. All others will be rejected. Submit four (4) copies of material catalog product numbers and descriptions to the Engineer. One copy of all submittals is to be provided to the maintaining agency. Reference the project number, P.I. number and QPL number for the following traffic signal items:

- Signal heads
- LED Signal Modules
- Mounting hardware
- Controllers
- Cabinet assemblies
- Battery Backup System (BBS)
- Detectors
- Monitors (conflict/IVDS)
- Cable
- Load switches
- Blank-out signs
- Lane use signals
- Preformed cabinet bases
- Other related signal equipment (including but not limited to Conduit, Pull boxes, Ground Rods, Enforcement Indications, etc.)

E. Test Results Submittal

Submit the results of the testing of the following items to the Engineer. A copy of the test result submittals shall be provided to the maintaining agency.

- Loop Detector Testing
- Signal Cable Testing
- Interconnect Cable Testing
- Pre-emption Testing
- Controller and Cabinet Testing from Manufacturer (Including conflict monitor)
- Traffic Signal Monitor

- Any other operational testing required by the Engineer

F. Mast Arm Pole Chart

For locations with mast arm pole installations, submit a "Mast Arm Pole Chart" for review and approval by the State Bridge and Structural Design Engineer. The "Mast Arm Pole Chart" shall also include a sketch on an 8 ½ inch x 11 inch (216 mm x 279 mm) sheet of paper showing the following:

- Curb lines
- Location of mast arm pole based on utility information and field location verified by Contractor. (Final location of mast arm pole must meet the criteria for setback from the road as specified in the Roadside Design Guide by AASHTO and in the Standard Detail Drawings.
- Distance from both adjacent curbs to mast arm pole
- Distance along mast arm from pole to curb and from curb to each proposed signal head
- Directional arrow
- Street names
- Position of Luminaries

Label the sketched distances. Once this pole chart is approved, the Contractor shall use the distances measured to the proposed signal head locations when ordering the mast arm to ensure that the mast arm is fabricated with holes for signal head wiring in the correct locations.

647.2 Materials

647.2.01 Delivery, Storage, and Handling

A. State-supplied Equipment

For projects where traffic signal equipment is to be supplied by the Georgia Department of Transportation, obtain State-supplied traffic signal equipment from the Traffic Signal Electrical Facility (TSEF):

1. Contact the Engineer by phone or correspondence within one week after receiving the Notice to Proceed and arrange for a date, time and location to pick up the signal equipment and materials from the Traffic Signal and Electrical Facilities (TSEF).
2. Sign GDOT's Warehouse Issue Request Form 592 to accept delivery of the State-supplied equipment from GDOT's Traffic Signal Equipment Warehouse. Initial Form 592 if equipment is received from a GDOT District Field Office.
3. Inspect the equipment to ensure that it is operating properly and perform any operational tests within ten (10) calendar days after receiving the equipment.
4. Before installation, and within ten (10) calendar days, certify to the Engineer in writing that the State-supplied equipment was received in good condition.
5. Notify the Engineer in writing if the State-supplied equipment is defective. The State Signal Engineer will replace the defective State-supplied equipment.
6. If no written dissent is received after ten (10) calendar days or if equipment is installed in the field, the Engineer will consider this equipment to be satisfactory and accepted.
7. The Contractor shall supply new in like and kind State approved equipment to replace State-supplied equipment that is damaged or lost.

B. Signal Equipment

See Section 925 for signal equipment specifications.

The signal equipment, components, supplies, or materials used in traffic signal installation may be sampled and tested if not previously approved by the Department.

Test according to the Specifications and the Sampling, Testing, and Inspection Manual using one or more of the following methods:

- Have the Department use their own facilities.
- Have the supplier or manufacturer use their facilities with an authorized Department representative to witness the testing.
- Provide independent laboratory test results indicating compliance with Department Specifications referenced in Subsection 647.1.02, "Related References", of this document.
- When testing by the Department is required, supply the item to the Department. Acceptance of materials tested does not exclude further testing or waive warranties and guarantees required by the Specifications.

C. Cable

Use cable conforming to Section 680, Section 922, and Section 925 and the appropriate IMSA, NEMA, or UL Specifications for the wire or cable.

Obtain pole attachment permits required by local utility companies or pole owners to allow joint use for signal cable, hardware, or other auxiliary devices.

D. Interconnect Communications Cable

1. Use fiber optics interconnect cable or spread spectrum radio for all new interconnected signal systems. See Section 935 for fiber optic cable or spread spectrum information, specifications, marking and installation and testing techniques.
2. Use copper cable only as directed by the Engineer or where specifically shown in the Plans. Refer to Subsection 647.3.05, "Construction", of this document for installation.

E. Conduit on Structures

Use galvanized rigid steel materials for all exposed conduit for cabling. Use galvanized rigid steel (GRS) conduit on the exterior of signal poles and other structures and to house signal conductors for the entire length from the weather head on the pole to the interior of the cabinet or to the pull box and ground conduit using an approved grounding bushing.(see Subsection 647.3.05V).

647.3 Construction Requirements

Refer to Subsection 107.07 of the Specifications regarding proper conduct of The Work.

647.3.01 Personnel

For the definition of a qualified electrician, see Subsection 755.1.01.

647.3.02 Equipment

Use machinery such as trucks, derricks, bucket vehicles, saws, trenchers, and other equipment necessary for the work and approved by the Engineer prior to installation operations.

647.3.03 Preparation

Utility Permits

A. Application

Apply for, obtain, and pay for utility services and pole attachment permits for signal operation, traffic signal communications including standard telephone service and signal communications as required in the Plans.

B. Maintenance

The Contractor will be responsible for establishing utility services and ongoing monthly costs related to utility services until Final Acceptance of the signal(s) installation, or in the event of multiple installations, the Contractor will be responsible for utility costs until overall project acceptance. After Final Acceptance, the Contractor will provide an orderly transfer these services and permits to the local government or jurisdiction responsible for maintenance and operation. Ensure that the transfer does not interrupt service.

C. Utility Location

1. Adjustment

   Prior to ordering signal poles, locate utilities and adjust the location of poles, where necessary, to minimize utility conflicts. Obtain approval from the District Traffic Engineer for any deviation from the Plans.

   Determine the final length of mast arms based on any field adjusted pole locations. Final location shall be approved by the District Traffic Engineer.

2. Clearance

   When installing aerial cable of any type, it is the Contractor's responsibility to ensure that overhead clearance and separation requirements conform to local utility company standards, the NEC and the NESC. Refer to the Standard Details Drawings for further information on utility clearances.

3. Pre-emption

   When traffic signal pre-emption is used, coordinate with the railroad, fire department or any other agency that uses pre-emption to obtain pre-emption output and route output cable to the signal controller operating the intersection to be pre-empted. It is the Contractor's responsibility to obtain all permits and approval for crossing at grade or grade separated railroad facilities.

647.3.04 Fabrication

General Provisions 101 through 150.

647.3.05 Construction

A. Acquiring and Disposing of Equipment

Do not modify the signal equipment, design, and operation without the District Traffic Operations Engineer's written approval.

All traffic signal equipment removed or replaced shall be returned to District Traffic Signal Shops unless otherwise noted in the Plans or as directed by the Engineer or District Signal Engineer. Provide an inventory list and arrange a mutually agreeable delivery time with the District Signal Engineer twenty-four (24) hours in advance. All materials not returned to the District Signal shop shall be the responsibility of the Contractor to remove and dispose.

B. Traffic Signal Equipment Modification and Removal

Upon the Department issuance of Notice to Proceed any existing traffic signal equipment, responsibilities for maintenance, operations and response to traffic signal malfunction become the responsibility of the Contractor and provisions of Subsection 647.3.07, "Contractor Warranty and Maintenance", apply.

1. Remove existing signal equipment that is not used in the final installation when the new signal equipment is operational.

   Carefully remove equipment to minimize damage and retain it in its original form. This equipment may include:

   - Strain poles including the foundation down to 3 feet (900 mm) below ground level finished grade
   - Timber poles
   - Traffic signal cabinets including contents, cabinet base and work pads
   - Original signal heads including span wire support
   - Other equipment not retained in the final installation

   Ensure that unused equipment is secured and disposed of in accordance with all Environmental Protection Agency regulations and Department instructions.

2. Replace traffic signal equipment that the District Signal Engineer determines has been damaged or destroyed during installation, modification, or removal of the traffic signal, at no expense to the Department. Replace with new material.

3. If the Engineer finds that the existing material shown in the Plans to be relocated is unsatisfactory, replace with new material. The costs will be paid for as Extra Work.

4. Remove old signal heads by the end of the day that the new signal equipment is placed in operation. Remove all other signal equipment within seven (7) days after operations of the newly installed equipment.

C. Auxiliary Cabinet Equipment

Provide auxiliary cabinet equipment or special purpose equipment with connecting harnesses, if necessary, or as shown in the Plans or Standard Detail Drawings.

1. Install the equipment in its associated cabinet. Extraneous wiring may be necessary to install the equipment. Additional cabling shall be enclosed in NEMA enclosure and neatly secured.
2. Connect the auxiliary equipment to its cable harness, or insert it in premounted racks or sockets.

D. Signal Controllers

Furnish and install approved microprocessor controllers at the locations shown in the Plans or as directed by the Engineer. All equipment furnished shall comply with Section 925,"Traffic Signal Equipment".

1. Identify the controller and other auxiliary equipment by model and revision numbers. These numbers shall agree with previously approved catalog submittals.
2. Assemble the controller, cabinet, and auxiliary equipment to provide the operational sequence shown in the Plans and future operations specified. Ensure the controller functions as a unit with the cabinet assembly.
3. Ensure controller and auxiliary equipment are provided AC power from receptacles marked for controller power.
4. The Department will provide controller firmware. The Contractor shall provide the controller to the Department. The Department will load the firmware into the controller and notify the Contractor that the controller is ready to be picked up. If the controller is purchased with applications firmware, ensure that the firmware provided is the current Department licensed version of firmware including "boot code". Current firmware version shall be at the date of application "turn on".
5. Unless otherwise specified in the Plans or directed by the Engineer, thirty days prior to installation of equipment the Contractor shall deliver the controllers to and pick up the controller from the Traffic Signal Electrical Facility (TSEF) Atlanta office. The Department shall have 30 work days to load the controller firmware starting from the date the Contractor delivered the controllers to the Department.
6. For 2070 signal controllers used for Ramp Metering ensure the Watchdog Timer "Muzzle Jumper" is selected on the field input/output module. This is required for operating with a 208 monitor.

E. Cabinet Assembly

1. Location

   The cabinet should be located in accordance with the Plan location, however if the cabinet location needs to be moved, choose a location that:

   a. Protects maintenance personnel from vehicles when servicing the equipment
   b. Allows the front panel door of the controller to open away from the intersection for view of signal indications while servicing or performing cabinet work.
   c. Does not block a sidewalk or passageway and complies with Federal regulations for Americans with Disabilities Act (ADA) clearance requirements.
   d. Is located away from the roadway or curb line to prevent vehicular damage to the cabinet.
   e. Is not located within drainage areas or installed in areas likely to collect and hold surface water.
   f. Relocate the cabinet to avoid conflicts from proposed reconstruction projects, commercial driveways, etc. within the right-of-way at the Engineer's discretion.

2. Erection

   Install and level traffic signal controller cabinets at locations shown in the Plans and/or as directed by the Engineer.

   a. Install cabinets to conform to the Standard Detail Drawings. Install pole or base-mounted as indicated in the Plans. Cabinet base shall not extend more than 9 inches above final grade.

b. Seal base-mounted cabinets to their base using silicone based sealer. Pliable sealant used shall not melt or run at temperatures as high as 212 ºF (100 ºC).

c. Use prefabricated bases and work pads

d. Install technician pad in front and rear of the controller cabinet door and if applicable in front of battery backup cabinet door. See Standard Details for pad information.

e. Close all unused conduit in the controller base with a PVC cap sized appropriately. Do not permanently affix the conduit cap to the conduit. Seal those conduits used for signal cable with a pliable sealant to prevent moisture and insects from entering the cabinet via the conduit.

3. Field Cabinet Wiring

All wiring shall be neat and secured and comply with NEC, NEMA, and Table 647-1, Table 647-2, Table 647-3 Table 647-4, Table 647-5, and Table 647-6 of this Specification.

a. Cut field cabinet wiring to the proper length and organize it in the cabinet. Wire lengths should be slack (minimum 10 feet) allowing for future modifications.

- Use at least No. 6 AWG wire for the conductors between service drop and AC+ and the AC- terminals.

b. Do not mount electrical meter to the cabinet. Submit “power pedestal” or other method of providing location for mounting to the Engineer.

c. Label all field terminals and conductors so as to identify the specific field input.

d. Crimp terminal connections to conductors with a ratchet-type crimping tool that will not release until the crimping operation is completed.

e. Do not use splices inside the controller cabinet, base, or conduit.

f. Do not use solid wire, except grounding wire.

g. Supply the cabinets with cabinet wiring diagrams, schematic drawings, pin assignment charts, and manuals for circuits and components. Store these documents in the cabinet in a resealable, weatherproof container.

F. Signal Monitors

Furnish signal monitor equipment as follows,

1. Mount signal monitors in a rack with appropriate connectors to attach to the wiring harness.
2. Program the monitor according to the signal operation indicated in the Signal Plans before placing the installation in flash or stop-and-go operation. Provide any signal monitoring programming tools required to program the monitor to the maintaining agency.
3. Configure and equip the signal monitor to monitor all red signal indications. Ensure that the red output for unused or vacant load bays or output slots is jumpered to 120 V AC+.
4. For ITS Cabinets configure the CMU and AMU.
5. For Ramp Metering Cabinets mount model 208 monitor in rack and provide the necessary programming required for the Ramp Meter operation as shown in the Plans.

G. Power Disconnect

Install a power disconnect box at each intersection as shown in the Standard Detail Sheets. Ensure the power disconnect is installed at the top of the cabinet pole or as indicated on plans. Install service cables from disconnect box and terminate as specified on the controller cabinet-wiring or battery backup diagram.

H. Flashing Beacon

Furnish and install the flashing beacon controller at the locations shown in the Plans and/or as directed by the Engineer. Install it as a complete unit (solid state flasher and cabinet with time clock, if applicable) and ensure that it conforms to this Specification.

I. Loop Detector Systems

Install and test loop detector systems according to NEMA Standards Publication TS 1-1983, Section 15, Inductive Loop Detectors, subsequent revisions (except as shown in the Plans), Details, notes, and this Specification.

Ensure that loop detectors are complete and fully operational before placing the signal in stop-and-go operation.

1. General Installation Requirements

   Each loop must consist of at least two turns of conductor, unless otherwise shown in the Plans or this Specification. Do not place a portion of the loop within 3 feet (1 m) of a conductive material in the pavement such as manhole covers, water valves, grates, etc.

   a. Install pull boxes, condulets, and conduits before beginning loop installation.

   b. Ensure that the ambient pavement surface temperature in the shade is at least 40 ºF (5 ºC) before cutting roadway and placing sealant into saw cuts.

2. Loop Saw Cuts

   a. Outline the loop on the pavement to conform to the specified configuration.

   b. Ensure each loop has a separate saw cut with a minimum distance between saw cuts of 6 inches.

   c. Install the detector loop in a sawed slot in the roadway surface deep enough to provide at least 3 inches (76 mm) of sealant cover.

   d. Ensure that the slot is at least 0.25 inches (6 mm) wide for stranded No. 14 AWG loop wire, THWN, XHHW, or XLPE, and at least 0.31 inches (7 mm) wide for polyethylene or PVC encased No. 14 AWG loop wire.

      1.) At the intersection of the slots, drill a 2 inch (51 mm) diameter hole or make miter saw cuts in the pavement. Overlap miter saw cuts at the intersection of saw cuts so that the slots have a full-depth and smooth bottom.

      2.) Prevent the wire from bending sharply.

      3.) Do not install detector loop wire unless sawed slots are completely dry and free of debris. Pressure wash the slot to guarantee adhesion of the loop sealant. Use compressed air to thoroughly dry the sawed slot.

      4.) Install the loop wire starting at the nearest pull box or condulet, around the loop for the specified number of turns, and back to the pull box or condulet.

      NOTE: Loop wire from the street is to bespliced in condulets or pull boxes only.

      5.) Refer to table 647-9 for the number of turns for Quadrupole loops. Refer to table 647-8 for the number of turns for) Bipole loops. Bipole loops require at least three (3) turns.

   e. Press the wire in the slot without using sharp objects that may damage the jacket.

   f. Hold the loop in place every 5 feet (1.5 m) with 1 inch (25 mm) strips of rubber, neoprene, flexible tubing, or foam backer rod as approved by the Engineer.

   g. Leave the hold down strips in place when filling the slot with loop sealant.

   h. Where encased loop wire is used, apply a waterproof seal to the ends of the polyethylene tubing that encase the wire to prevent moisture from entering the tube.

   i. Where the loop wires cross pavement joints and cracks, protect the loop wires using the method specified in “Traffic Signal Details” in the Plans. When crossing expansion joints drill a 2 inch diameter hole minimum 3 inches deep, or to bottom of saw cut. Do not install loop wires in an expansion joint.

   j. Twist Loop Lead-in 3 turns per foot.

3. Loop Sealing

   After successfully testing each loop, fill the slots with sealant to fully encase the conductors.

   a. Seal the slot within one hour of cutting slot.

   b. Ensure that the sealant is at least 3 inches (75 mm) thick above the top conductor in the saw cut.

   c. Apply the sealant so that subsequent expansion does not extend the sealant material above the pavement surface.

   d. In case of accidental spill, before the sealant sets, remove surplus sealant from the adjacent road surfaces without using solvents or epoxy sealants.

e. When the Engineer determines that the loop sealant can accommodate traffic but the surface is tacky, dust the sealer on the pavement surface with cement dust before opening the roadway to traffic.

f. Dispose of the solvents used to clean loop installation equipment according to the manufacturer's specifications and local, State, and Federal regulations.

4. Loop Connections

Connect loop conductors to a shielded lead-in cable that runs from the pull box adjacent the pavement edge or condulet to the detector hook-up panel in the controller cabinet, unless otherwise specified in the Plans.

a. Use continuous (no splices) shielded lead-in cable from the pull box or condulet to the cabinet input file terminal. Do not ground the shield in the loop lead-in cable at the cabinet.

b. Connect each loop to an individual detector channel as specified in the Plans.

c. If the Plans specify that two or more loops will be operated on the same detector channel or detector amplifier unit, wire them in series to their loop lead-in at the pull box or condulet.

d. Use series-parallel connections when series connections do not meet the manufacturer's specified operating range for the detector amplifier unit.

e. Make weather-tight and waterproof splices as detailed on the Plan Standard Detail Sheets. Make loop splices to loop lead-in cable only after the detector system has been tested and demonstrated under traffic conditions to the Engineer's satisfaction.

5. Loop Maintenance

Locate all existing loops, determine the operational status of all loop assemblies, and notify the Engineer prior to commencing loop construction activities at the intersection.

Maintain all existing, operational loops, unless otherwise notified by the Engineer. Repair of an existing loop that is non-operational prior to beginning work will be considered as extra work.

Locate points of conflict between new loops and existing loops, and install all new loops and saw cuts so as not to cut existing loop lead-ins and loop wires that are to be retained.

If an existing operational loop that is not scheduled for replacement fails during the construction time frame, notify the Engineer and complete the replacement of the damaged loops immediately.

The Engineer may grant a twenty-four (24) hour period to repair the loops if their operation is not critical. All costs associated with the replacement of the loops damaged during construction shall be charged and paid for by the Contractor.

J. Pedestrian Push Button

Install the push button with a pedestrian instruction sign as illustrated on the Department's Standard Detail Sheets and according to the Plans.

1. Place the pedestrian buttons as shown on the Signal Plan Sheet and within 10 inches (254 mm) of sidewalk or concrete landing pad. Position the pedestrian button to correspond to the appropriate signal phase. Locate pedestrian buttons perpendicular to the appropriate signal indication and signal phase, and as field conditions require.
2. Place the center of the buttons between 38 inches (0.965 m) and 42 inches (1.05 m) above the sidewalk or ground level.
3. Seal all openings to prevent moisture from entering the pushbutton.

K. Cable

Install and connect electrical cable to the proper equipment to produce an operating traffic signal system. Use stranded copper cable conforming to Section 925.

Install wiring in accordance with IMSA, NEMA, UL, and the Department's Traffic Signal Wiring Standards, shown in Tables 647-1, 647-2, 647-3, 647-4, 647-5, and 647-6 of this Specification.

In addition to the information provided below, see Section 682, Section 922, and Section 925 for cable equipment and installation specifications.

Table 647-1 Vehicular Signals Georgia DOT Wiring Standards			
Signal Indications	**3-Section Signal Heads Seven Conductor Cable**		**5-Section Signal Heads Seven Conductor Cable**
	Phases 2, 4, 6, and 8	**Phases 1, 3, 5, and 7**	**Phases 1/6, 2/5, 3/8 & 4/7**
Red	Red Wire		Red Wire
Yellow	Orange Wire		Orange Wire
Green	Green Wire		Green Wire
Red Arrow		White Wire with Black Tracker	
Yellow Arrow		Black Wire	Black Wire
Green Arrow		Blue Wire	Blue Wire
Neutral	White Wire	White Wire	White Wire

Table 647-2 Vehicular Loop Detectors Georgia DOT Wiring Standards				
Detectors	**Phases 3, 4, 7, and 8 Presence Loops**		**Phases 2 and 6 Setback Pulse Loops and Phases 1 and 5 Presence Loops**	
	Loop Wires	**Shielded Loop Lead-in Cable, 3 Pair**	**Loop Wires**	**Shielded Loop Lead-in Cable, 3 Pair**
Right Curb Lane	Red Wire	Red/Black Pair (1)	Red Wire	Red/Black Pair (1)
Second Lane	Green Wire	Green Black Pair (1)	Green Wire	Green Black Pair (1)
Third Lane	White Wire	White/Black Pair (1)	White Wire	White/Black Pair (1)
Fourth Lane	Red Wire	Red/Black Pair (2)	Red Wire	Red/Black Pair (2)
Fifth Lane	Green Wire	Green/Black Pair (2)	Green Wire	Green/Black Pair (2)
Sixth Lane	White Wire	White/Black Pair (2)		
First Left-Turn Lane			Red Wire	Red/Black Pair (3)
Second Left-Turn Lane			Green Wire	Green/Black Pair (3)

Table 647-3 Pedestrian Signals Georgia DOT Wiring Standards		
Signal Indications	**2-Section Signal Heads Seven Conductor Cable**	
	Phases 2 and 6	**Phases 4 and 8**
Don’t Walk	Red Wire	White Wire with Black Tracker
Walk	Green Wire	Blue Wire
Neutral	White Wire	White Wire

Table 647-4 Pedestrian Detectors Georgia DOT Wiring Standards		
	3 Pair Shielded Cable	
Push Buttons	**Phase 2 and 6**	**Phase 4 and 8**
Call	Green and Black Pair	Red and Black Pair

NOTE: Do not use aluminum cable.

Table 647-5 Ramp Meter Signals Georgia DOT Wiring Standards	
Signal Indications	**3-Section Signal Heads Seven Conductor Cable L1,L2,L3**
Red	Red Wire
Yellow	Orange Wire
Green	Blue Wire
Neutral	White Wire

Table 647-6 Ramp Meter Loop Detectors Georgia DOT Wiring Standards				
	Demand Detector Loops		**Queue Detector Loops**	
	Loop Wires	**Shielded Loop Lead-in Cable, 3 Pair**	**Loop Wires**	**Shielded Loop Lead-in Cable, 3 Pair**
Lane 1	Red Wire	Red/Black Pair (2)	Red Wire	Red/Black Pair (1)
Lane 2	Green/Wire	Green Black Pair (2)	Green Wire	Green/Black Pair (1)
Lane 3	White Wire	White/Black Pair (2)	White Wire	White/Black Pair (1)
	Passage Detector Loops		**Mainline Detector Loops (if used)**	
	Loop Wires	**Shielded Loop Lead-in Cable, 3 Pair**	**Loop Wires**	**Shielded Loop Lead-in Cable, 3 Pair**
Lane 1	Red Wire	Red/Black Pair (3)	Red Wire	Red/Black Pair (4)
Lane 2	Green Wire	Green/Black Pair (3)	Green Wire	Green/Black Pair (4)
Lane 3	White Wire	White/Black Pair (3)	White Wire	White/Black Pair (4)

L. Signal Cable for Vehicular Signal Heads and Pedestrian Heads

Install cable for signal heads and pedestrian heads as follows:

1. For vehicle signal heads, install one 7-conductor signal cable for each intersection approach from the controller cabinet to the through-signal head on each approach as directed by the Engineer. From this leftmost signal head, install a 7-conductor signal cable to each of the other signal heads on the same approach in sequence.
2. For pedestrian signal heads, install one 7-conductor signal cable from the controller cabinet to each pedestrian head installation location to operate either one or two pedestrian heads.
3. Make a minimum 1 foot (300 mm) diameter 3 turn weather drip loop as shown in the Standard Detail Drawings in the Plans at the entrance to each signal head.
4. Neatly tie signal cables leaving a structure or weatherhead to enter a signal fixture. Tie the cables to the messenger cable as illustrated in the Standard Detail Drawings.
5. For Ramp Meter signal heads install one 7-conductor signal cable for each lane of the Ramp Meter operation from the controller cabinet.

M. Interconnect Communications Cable

Use fiber optic interconnect cable as specified in the Plans for all new interconnected signal systems. See Section 935 for fiber optic cable information, specifications and installation and testing techniques, and all other signal interconnect methods. Install interconnect communications cable as follows:

1. Provide support for the interconnect cable on new or existing utility poles or signal poles; install underground in conduit.
2. Use fiber optic standoff brackets as needed to prevent damage from poles, trees and other structures.
3. Pull cables with a cable grip that firmly holds the exterior covering of the cable.
4. Pull the cables without dragging them on the ground, pavement or over or around obstructions. The Engineer will inspect and approve the cable prior to installation. Use powdered soapstone, talc, or other approved inert lubricants to pull the cable through the conduit.
5. When using a separate messenger cable, spirally wrap the communications cable with a lashing machine according to the IMSA-20-2 Specifications.
6. Do not splice outside the signal cabinet except at the end of full reels of 5,000 feet (1500 m).
7. Ensure that splice points are near support poles and accessible without closing traffic lanes.
8. Unless drop cable assemblies for communications are used, loop the cable in and out of the control cabinets. Coil and tie 10 feet (3 m) of cable in the controller cabinet foundation. Tape the cable ends to keep moisture out until the terminals are attached.
9. Prevent damage to the cable during storage and installation.

NOTE: Do not allow anyone to step on or run over any cablewith vehicles or equipment.

N. Loop Detector Lead-in Cable

Use 3-pair shielded lead-in cable in compliance with Section 925 and manufacturer's recommendations for Detector loop lead-in installed for loop detectors. Ensure the three pair has 3 separate distinguishing colors. Use a shielded lead-in cable connecting the loop to the detector hook-up panel in the controller cabinet, unless otherwise specified in the Plans. Provide a separate 3- pair for each phase or future phase.

1. Splice the loop detector wire to a shielded loop detector lead-in cable in a pull box adjacent to the loop detector installation.
2. Use continuous (no splices) shielded lead-in cable from the pull box or condulet to the cabinet input file terminal. If induced voltage is present, the shield in the loop lead-in cable shall be grounded to cabinet per NEC. Otherwise do not ground the shield in the loop lead-in cable at the cabinet.
3. Connect each loop to an individual detector channel as specified in the Plans.
4. Each detection loop shall be connected to the control cabinet via separate lead-in pair.
5. Set back loops with aerial loop leads to the control cabinet shall be supported by ¼ inch messenger cable with no splices between the control cabinet and the initial point of aerial attachment.

6. Make weather tight and waterproof splices between lead-in and loop wire. Loop installation may be approved only after the detector system has been tested and demonstrated under traffic conditions to the Engineer's satisfaction, during the Operational Test Period.

O. Pedestrian Push Button Lead-in

Use 3-pair shielded lead-in cable compliant with Section 925 for pedestrian push buttons. Install one 3-pair shielded lead-in cable to each pedestrian push button station(s) location to operate either one or two push buttons. Do not ground the shield for the push button lead-in cable at the controller cabinet. Do not use the same 3 pair cable for loop and pedestrian detectors.

P. Messenger Cable, Stranded-Steel

The messenger is used to support signal cable indicated in the Plans as overhead cable. Use devices such as aluminum wrap, aluminum wire ties or lashings to attach the cable.

- Before erecting the messenger strand, determine the suspension strand length to span the distance between the poles.
- Run the messenger strand from structure to structure without splicing.
- The minimum allowable sag is two and one-half percent (2.5%) for timber poles, five (5%) for strain poles of the longest diagonal distance between the signal poles unless pole manufacturers specifications exceed 2.5%.
- Calculate attachment points for the messenger strand at the signal pole according to the Plan Detail Sheet.

Set messenger strands so that the height conforms to the clearances on the Standard Detail Drawings. Attach cables to messenger cable using lashing wire, aluminum ties, or lashing rods (Subsection 925.2.43). If lashing rods are used use lashing rods sized for the cables and messenger strand. Only use lashing rods that are of the same material as the messenger strand. Lashing wire shall only be used to support aerial loop lead-in and fiber optic.

1. Drill wood poles to receive the eye bolts so that the span wire and eyebolt at each connection form a straight angle.
2. Never pull or strain the messenger on the eye bolt to an angle of variance greater than ten degrees (10º).
3. Attach down guy wires to guy hooks. Use a minimum 3/8 inch messenger cable for down guys. Never attach them directly to the eye of an eyebolt.
4. Ensure that messenger strand clearances conform with local utility company Standards.
5. Make stranded messenger cable attachment points with the appropriate size strand vises or 3 bolt clamps. Stranded steel messenger cable is not paid for separately under this Specification.
6. Use minimum ¼ inch messenger cable.
7. Use standoff brackets as needed to prevent damage from poles, trees or other structures.

NOTE: Never splice messenger cable between structures or stand off brackets.

Q. Underground Cable for Signal Circuits

Underground cable for signal circuits includes cable, with conduit, as shown in the Plans. Install cable under existing pavement or surfaced shoulder, according to Subsection 680.3.05.

1. Cable in Conduit

   Pull cable into conduits as follows:

   a. Pull cables into conduits without electrical or mechanical damage. Pull cables by hand only. The use of trucks or other equipment is not permitted, unless approved by the Engineer. If mechanical pulling is approved, do not exceed the manufacturer's tension rating for the cable.
   b. Pull cables with a cable grip that firmly holds the exterior covering of the cable.
   c. Use powdered soapstone, talc, or other inert lubricants to place conductors in conduit according to manufacturer's recommendations.
   d. Handle and install the conductors to prevent kinks, bends, or other distortion that may damage the conductor or outer covering.

e. Pull all cables in a single conduit at the same time. When pulling cables through hand holes, pole shafts, etc., use a pad of firm rubber or other material between the cable and the opening edges to prevent cable damage.

f. When installing cable in conduit with existing signal cable circuits remove all existing cables and pull them back into the conduit with the new cables.

g. The distance between pull boxes in a run of conduit shall not be greater than 100 feet (30 m), unless otherwise shown in the Plans or approved by the Engineer or District Signal Engineer, with the exception of fiber optic cable.

h. The distance between pull boxes in a run of conduit for fiber optic cable shall not exceed 750 feet (225 m), unless otherwise shown in the Plans or approved by the Engineer. Identification tape and tone detection wire shall be used for fiber optic cable in conduit. All unused conduit shall have a continuous pull cable installed between pull boxes.

2. Splices

Required splicing shall be performed according to the National Electric Code; use materials compatible with the sheath and insulation of the cable.

Insulate required splices with electrical insulation putty tape, plastic, pressure sensitive, all-weather 1.5 mil (0.038 mm) electrical tape in accordance to standard details.

a. Make the spliced joints watertight.

NOTE: Splice detector wires to shielded loop detector lead-in at pull boxes located immediately after loop wire leaves the roadway. No splices will be permitted in shielded loop detector lead-in cable from this point tothe controller cabinet.

R. Conduit and Fittings

Install conduit by type (GRS, HDPE, PVC) as shown in the Plans and the Standard Detail Drawings. Refer to the NEC, for conduit full percentages.

Separate the power cable to the controller cabinet from all other cables in its own 1in (25 mm) galvanized rigid steel conduit except inside poles. Ensure that conduit conforms to Section 682, Section 923 and Section 925 with the following addition:

- Use flexible conduit only where shown in the Details or as directed to do so in writing by the District Signal Engineer.

Use the conduit size specified in the Plans, unless otherwise directed by the Engineer. Obtain written approval from the Engineer prior to installing conduit other than the size specified in the Plans.

All 2 inch (50 mm) conduit elbows shall be “sweep” type. The minimum radius for the elbow is 18 inches (450 mm), unless otherwise approved by the Engineer.

NOTE: Do not use multi-cell conduit.

Install conduit and fittings as follows:

1. Ensure that exposed conduit on poles are galvanized rigid steel (GRS) conduit.
2. Ream the ends of metallic conduit after cutting the threads. Ream other conduit as necessary.
3. Cut the ends square, and butt them solidly in the joints to form a smooth raceway for cables.
4. Make conduit joints to form a watertight seal.
5. Coat metallic conduit threads with red- or white-lead pipe compound, thermoplastic or Teflon seal. Ensure that they are securely connected.
6. Make plastic conduit joints with materials recommended by the conduit manufacturer.
7. Install bushings in the conduit to protect the conductors. When conduit is installed for future use, properly thread and cap the ends of the metallic conduit runs.
   a. Plug the ends of nonmetallic conduit runs to prevent water or other foreign matter from entering the conduit system.

   b. Seal the exposed conduit ends with a permanently malleable material.
   c. Ensure that empty conduit installed for future wire or cable has a nylon pull string or cord inside that is impervious to moisture and rot and can withstand a load of 50 pounds (23 kg) without breaking. Secure this pull cord at each open end and at each pull box.
8. Ensure that conduit on pole exteriors are mounted with galvanized, two-hole straps or clamps. Place the clamps not more than 3 feet (1 m) from junction boxes, condulets, or weatherheads. Place it at 3 foot (0.9 m) intervals elsewhere.
   a. Fasten the clamps to wood poles with galvanized screws or lag bolts.
   b. Do not install conduit risers on concrete, steel, or mast arm poles unless approved by the Engineer.
9. Install a weatherhead at the end of exterior conduit runs on a pole or other structure to prevent moisture or other matter from entering the conduit.
10. After installation, ensure that the conduit or fitting placement has not warped or distorted any condulet, terminal, control or junction box.
11. Ensure Conduit that is terminated at poles is grounded at the pull box.

S. Underground Conduit

Underground conduit includes encased or direct burial conduit.

1. Install the conduit in a trench excavated to the dimensions and lines specified in the Plans.
   a. Provide at least 18 inches (450 mm) finished cover, unless otherwise specified.
   b. Under pavement, excavate at least 36 inches (900 mm) below the bottom of the pavement.
2. Before excavation, the Contractor is responsible for determining the location of electrical lines, drainage, or utility facilities in the area to prevent damage.
   a. Place the conduit where it will not conflict with proposed guardrail, sign posts, etc.
   b. Change locations of conduit runs, pull boxes, etc., if obstructions are encountered during excavation. Changes are subject to the Engineer's approval.
   c. Where possible, provide at least 12 inches (300 mm) between the finished lines of the conduit runs and utility facilities such as gas lines, water mains, and other underground facilities not associated with the electrical system.
3. When the conduit run is adjacent to concrete walls, piers, footings, etc. maintain at least 4 inches (100 mm) of undisturbed earth or firmly compacted soil between the conduit and adjacent concrete or, when the conduit is encased, between the encasement and the adjacent concrete. Unless specified in the Plans, do not excavate trenches in existing pavement or surfaced shoulders to install conduit.
4. When placing conduit under an existing pavement, install the conduit by directional boring, or other approved means. See Section 682 for directional boring pipe specifications. Obtain the Engineer's approval prior to installing conduit by means of boring-method.
5. When the Plans allow trench excavation through an existing pavement or surfaced shoulder, restore the pavement shoulder surface, base, and subgrade according to the Specification.
6. Cut trenches for conduit on a slight grade (0.25 percent minimum) for drainage, unless otherwise specified. When the grade cannot be maintained all one way, grade the duct lines from the center, both directions, down to the ends.
7. Avoid moisture pockets or traps. Excavate vertical trench walls.
8. Tamp the bottom of the trench to produce a firm foundation for the conduit.
9. When necessary to prevent damage, sheet and brace the trenches and support pipe and other structures exposed in the trenches.
10. Conduit installed for fiber optic cable installation shall have identification tape and detectable tone wire installed for detection as specified and detailed in the Project Standard Detail Sheets.
11. Install direct burial conduit as shown in the Plans. Use rigid galvanized steel, or polyethylene conduit. Excavate at least 36 inches (900 mm) below the top of the finished ground or 36 inches (900 mm) below the bottom of the pavement.

12. When rock is in the bottom of the trench, install the conduit on a bed of compacted, fine-grain soil at least 4 inches (100 mm) thick.
13. Conduit installed for fiber optic cable installation shall have detectable tone wire installed for detection as specified in Section 682 and detailed in Standard Detail Sheets.

T. Encased Conduit

Place encased conduit in the locations shown in the Plans unless otherwise specified. Construct as follows:

1. Construct the encasement using Class A concrete that meets requirements in Section 500 .
2. Extend the encasement or conduit under roadway pavements or surfaces 6 inches (150 mm) past the outer edge of paved shoulders or sidewalks, or past curbs if no shoulder or sidewalk is present.
3. Extend the conduit at least 3 inches (75 mm) beyond the encasement.
4. Place 3 inches (75 mm) of concrete in the bottom of the trench and place the conduit on top of it.
5. Temporarily plug the ends of the conduit to prevent concrete or foreign materials from entering.
6. Cover the conduit with at least 3 inches (75 mm) of concrete. Wait to encase the conduit with concrete until the Engineer inspects and approves the conduit.
7. Cure the concrete encasement according to Subsection 500.3.05.Z, except curing may be reduced to twenty-four (24) hours. Use a precast encasement if approved by the Engineer.

U. Backfilling

Immediately backfill the conduit after the Engineer's inspection and approval, except for encased conduit, which must complete a twenty-four (24) hour cure period.

1. Backfill with approved material free of rocks or other foreign matter.
2. Backfill in layers no greater than 6 inches (150 mm) loose depth, up to the original ground level.
3. Compact each layer to one hundred percent (100%) of the maximum laboratory dry density as determined by GDT 7, GDT 24a, GDT 24b, or GDT 67 whichever applies.~~.~~

V. Conduit on Structures

Install conduits, condulets, hangers, expansion fittings, and accessories on structures according to the Plans and, unless otherwise specified, the following:

1. Run the conduit parallel to beams, trusses, supports, pier caps, etc.
2. Install horizontal runs on a slight grade without forming low spots so they may drain properly.
3. Run conduits with smooth, easy bends. Hold the conduit ends in boxes with locknuts and bushings to protect the conductors.
4. When not specified in the Plans or Special Provisions, submit the type and method for attachment to structures to the Engineer for submission to the District Signal Engineer for approval.
5. Ground galvanized rigid steel conduit in pull boxes.

All exposed conduit shall be galvanized, rigid conduit unless otherwise specified.

W. Testing Conduit

After installing the conduit, test it in the presence of the Engineer.

1. Test conduit using a mandrel 2 inches (50 mm) long and 0.25 inches (6 mm) smaller in diameter than the conduit.
2. Repair conduit to the Engineer's satisfaction if the mandrel cannot pass through. If repairs are ineffective, remove and replace the conduit at no additional cost to the Department.
3. Thoroughly clean the conduits. When installing conduit but wiring at a later date:
   a. Perform the mandrel test.
   b. Ream the duct opening to remove burrs or foreign matter.

c. Thoroughly clean the duct.

d. Provide and install a weatherproof cap at each open end.

e. All installed conduit not used or containing cable shall have a continuous nylon pull string installed between junction boxes.

X. Grounding

Ground the cabinets, controller, poles, pull boxes, and conduit to reduce extraneous voltage to protect personnel or equipment**.**

NOTE: Grounding shall meet the minimum requirements of NEC.

Provide permanent and continuous grounding circuits with a current-carrying capacity high enough and an impedance low enough to limit the potential above the ground to a safe level.

Perform grounding as follows:

1. Bond the grounding circuits to nonferrous metal driven electrodes. Use electrodes that are at least 0.625 inches (15 mm) in diameter, 8 feet (2.4 m) long, and are driven straight into the ground.
2. Use the shortest possible ground lead that leads directly to a grounding source.
3. Ensure that the maximum resistance between the ground electrode and the earth ground is no greater than twenty five (25) ohms.
4. Connect the ground electrodes and the ground wire with an exothermic weld or ground rod clamp as approved by Signal Engineer.
5. Connect neutral conductors to the cabinet buss-bar and ground them at each terminal point.
6. Ground the cabinet with a No. 6 AWG solid copper wire between the buss-bar to the ground electrode. Bends shall not exceed 4 inch (100 mm) radius bends.
7. Permanently ground the poles by bonding the No. 6 AWG solid copper wire to a separate ground rod.
8. Ground pole-mounted accessories to the pole.
9. Underground metallic conduit or down guys are not acceptable ground electrodes. Do not use Snap-On connections.
10. For extended distances between Ramp Meter and IVDS additional grounding may be required by the manufacturer.

Y. Ground Rod

Install copper clad ground rods adjacent to the traffic signal pole bases, controller cabinet bases, and in pull boxes to shield and protect the grounding system.

When ground rods are not protected, bury them at least 2 inches (50 mm) below the finished ground level.

1. Use 0.625 inch (15 mm) diameter ground rods at least 8 feet (2.4 m) long. Use copper clad ground rods.
2. Drive single ground rods vertically until the top of the rod is no more than 2 inches (50 mm) above the finished ground.
3. Attach a length of No. 6 AWG solid copper wire to the top of the ground rod using an exothermic weld.
4. When controller cabinets are mounted on timber poles, ground them with No. 6 AWG solid copper wire attached to the ground rod. Run the wire inside a minimum 0.75 inch (19 mm) rigid conduit attached to the timber pole and to the chassis ground in the controller cabinet.
5. When ground penetration is not obtained:
   a. Place a horizontal ground rod system of three (3) or more parallel ground rods at least 6 feet (1.8 m) center-to-center and 30 inches (720 mm) below the finished ground.
   b. Ensure that this grounding system produces a resistance of 25 ohms or less.
   c. Join the ground rods and connect them to the grounding buss of the traffic signal cabinet with No. 6 AWG solid copper wire.
6. Install a ground wire on wood poles.

a. Use at least No. 6 AWG solid copper wire bonded to the grounding electrode and extending upward to a point perpendicular to the uppermost span.

b. Place wire staples no greater than 2 feet (0.6 m) apart to secure the ground wire to the pole.

c. Connect the span wire to the pole ground using copper split bolt connectors. Provide a separate ground rod for pole mount cabinets. Do not use the pole ground. Bond the pole ground to the pole cabinet ground rod.

7. Ensure that grounding for signal strain poles conforms to the grounding assembly typical erection Detail Sheet in the Plans.

8. Permanently ground cabinet and cabinet conduits to a multi-terminal main ground buss.

a. Use a No. 6 AWG solid copper wire bonded between the buss and grounding electrode.

b. Connect the power company neutral, conduit ground, and grounds of equipment housed in the cabinet to the buss-bar.

c. Do not ground to a permanent water system instead of the driven ground rod. Ensure that grounding devices conform to the requirements of the NEC and NEMA.

9. When testing for resistance ensure the ground is dry. The Contractor is responsible for submitting the ground test results.

Z. Signal Poles

See Section 501 for signal pole materials certification and Subsection 925.2.27, Subsection 925.2.28, Subsection 925.2.29, Subsection 925.2.30 and Subsection 925.2.31 for traffic signal equipment. Refer to the Plans for pole locations.

Where necessary, adjust pole location to avoid utility conflicts. Provide minimum clearance distances between the signal pole and the roadway as specified in the Plans and on the Standard Detail Drawings.

1. Strain Poles

Provide signal strain poles that conform to Section 639.

Provide caissons or foundations that conform to the "Construction Detail for Strain Pole and Mast Arm Pole Foundations" in the Plans.

Determine the required foundation size based on the manufacturer's specified "bending moment at yield" for each pole.

Provide strain poles with manufacturer-installed holes for pedestrian heads and push buttons. Seal unused holes with water tight plugs that match the pole finish provided by the manufacturer of the pole. All steel strain pole holes that are used shall have a rubber grommet or weather head.

Rake the poles during installation to provide a pole that is plumb once the load is applied.

2. Metal Poles

Install metal poles as follows:

a. Ensure that anchor bolts, reinforcing bars, and ground rods conform to Section 639 and Section 852 and are placed in the excavation.

b. Support the anchor bolts with a template to provide the proper bolt circle for the pedestal or pole to be installed. Anchor bolts shall be installed without any modifications. Refer to signal details for proper installation.

c. Wire the reinforcing bars together or to the anchor bolts.

d. Wire the conduits in the base to the reinforcing bars for support. Ensure that they are accessible above and beyond the foundation.

e. Before pouring the foundation concrete, determine that the anchor bolt orientation is correct so that the tensile load is divided between at least two anchor bolts. Pour and vibrate the concrete with the Engineer present.

f. Ensure that the pole foundations and pedestals with the anchor-type base conform to Section 500 and Section 639. Do not install or locate poles without the Engineer's approval. Ensure the foundation meets AASHTO guidelines.

1) The Engineer may take a concrete test cylinder as it is being poured.

2) Cure the cylinder and submit it for testing to the Office of Materials.

g. If the concrete foundation fails to meet the requirements of the Specifications and is not accepted, replace the foundation upon notification of failure.

h. After installing poles and applying the load of the signal span, inspect them for plumb and for the proper horizontal position of the mast arm, when applicable. Make sure all threads of the nut are threaded onto the anchor bolt.

i. Correct deficiencies by using the leveling nuts on the anchor bolts or by adjusting the mast arm.

j. The Engineer will examine the pedestals and poles for damaged paint or galvanizing. Restore the finish coating where necessary.

k. After the Engineer approves the pole installation, provide an acceptable method of protecting the area between the pole base and the top of the foundation to prevent the accumulation of debris.

If the finish or galvanized steel materials is scratched, chipped, or damaged, the material will be rejected. The finish may be replaced as specified under Section 645, with the Engineer's approval.

NOTE: Never add holes or openings to the metal pole or mast arm without approval from the Office of Bridge and Structural Design.

l. For poles or arms that need galvanization, thoroughly clean the steel poles and arms and touch up non-galvanized parts with i-d red or original-type primer.

m. Apply the remaining coats according to the System V (Heavy Exposure) Section 535, unless otherwise indicated in the Plans. The entire pole shall be the same color.

n. Install a service bracket and insulator on one pole at each intersection to attach power service wire as specified in the Plan Details. Install a disconnect box on the cabinet pole at each intersection to attach power service where the power service is provided overhead.

o. Install poles to which controller cabinets are attached with mounting plates, bolts, nipples, and at least two, 2.5 inch (64 mm) threaded openings at the top and at least two (2) 2 inch (50 mm) at the bottom of the pole.

p. Attach the fittings to the poles as specified by the manufacturer in the Plans or as the Engineer directs. The fittings may include:

- Cast aluminum cap
- Pole clamp hardware for span wire attachment
- Weatherhead with chase nipples and couplings
- Galvanized elbow with bushing installed by cutting the pole and welding in place around the entire circumference

q. The Office of Materials will inspect the anchor bolts. If approved, the Office of Materials will display the inspector's hammer stamp mark on the top of the bolt.

3. Concrete Strain Poles

a. Ensure that concrete strain poles meet the requirements of Section 639 and detailed construction drawings.

b. Install concrete strain poles so that the angle of variance between the eye bolt on the pole and the span wire is less than ten degrees (10º).

c. Verify pole hole orientations for pedestrian heads, pedestrian push button stations, luminaries arms, etc., with the Engineer prior to proceeding with traffic signal installation. For poles at cabinet location provide at least two 2.5 inch (64 mm) openings at the top of pole and at least two 2.0 inch (50 mm) threaded openings at the bottom.

d. Plug all unused holes. Use Grout or threaded fittings. Match the finish of the pole.

4. Mast Arms

Install mast arms that can accommodate traffic signal mounting hardware and that adhere to the manufacturer's recommended procedures and Section 925 and Section 915. Do not add holes.

a. Seal the openings in the mast arms to prevent pests from entering.

b. Align the mast arm to allow the signal heads to hang plumb at the correct height without using extensions.

c. All Mast arms are to be galvanized unless indicated otherwise in the Plans.

NOTE: The Contractor shall submit a "Mast ARM Pole Chart" to the Engineer and the Office of Bridge Design for review and approval as described in Subsection 647.103.F of this specification.

Verify pole hole orientations for pedestrian heads, pedestrian push button stations, luminaries arms, etc., with the Engineer prior to proceeding with traffic signal installation.

5. Aluminum Pedestrian Pedestals Poles

   Install aluminum pedestal poles, which adhere to Section 850 on breakaway aluminum bases that meet the requirements for breakaway construction. See Section 925 for breakaway base requirements. See the Standard Detail Drawings for Pole and Foundation Details.

   a. Secure at least four anchor bolts in a concrete foundation as shown in the construction Detail.
   b. As an alternate to a concrete foundation install a Pedestal Foundation Anchor Assembly (Subsection 925.2.29). Install the foundation until the top of the base plate is level with the ground. Slide bolt heads through the keyhole and under the base plate against the bolt head keepers with threads up. Bolt the pole base to the foundation. Adhere to the manufacturers instructions for installation.
      1) Use a Universal Driving Tool with the correct kelly bar adaptor and bolts supplied with the tool.
      2) Attach driving tool assembly to the foundation base plate using the bolts provided with each foundation. Be sure to align the tool soothe holes in the tool line up with the proper bolt circle on the foundation.
      3) Stand the foundation, with the attached drive tool assembly, upright and attach the drive-tool-foundation to the kelly bar.
      4) Raise the kelly bar until the foundation swings free of the ground. Maneuver the kelly bar until the point of the foundation is over the marked installation location.
      5) Lower the kelly bar until the point of the foundation is forced into the ground and the helix is flush with the ground surface.
      6) Ensure the shaft of the foundation is plumb by checking the shaft with a level on two sides that are at least 90 degrees from each other. Recheck the shaft to be sure it is plumb when the foundation has penetrated 1 foot into the ground.
      7) When the base plate of the foundation is 1 (25 mm) to 2 (50 mm) inches above the ground line remove driving tool.
   c. Contain the wiring inside the pole or in approved hardware. Do not allow conduit outside the pole.
   d. Position the pedestal pole plumb and high enough to clear the pedestrian's head as shown in the Plans. Ensure that the bottom of the pedestrian signal housing including brackets is not less than 10 feet (3 m) from the ground line. If using a vehicle signal housing ensure pole is adequate to give signal head a height of 12 feet (3.6 m)
   e. Instruct the supplier to furnish a mill certificate that shows the alloy and physical properties of the steel used in fabricating the anchor bolts. The bolts may be subjected to a tensile and shear strength test.

6. Timber Poles

   Timber poles do not require the use of concrete for filling the cavity around the pole base.

   Use timber poles that meet the requirements of Section 861 and Section 639. Use Class II for all signal support poles. Use Class IV for aerial loop lead-in or communication cable if approved by the Engineer. Poles shall be inspected and include AWW stamp.

   Drill wood poles to receive the eye bolt so that the angle of variance between the eye bolt and span wire at each connection is less than ten degrees (10º). See the Standard Detail Drawings for additional information.

   Guy timber poles use single or double guy wires as shown in the Plans and as directed by the Engineer. Guy helper cables with separate guy wires when helper signal span cables are indicated in the Plans.

   NOTE: Never attach down guy wires to eye bolts. Attach down guy wires to angle guy attachment only and install insulating rods on all down guy installations as detailed on Standard Detail Sheets.

AA. Pull Boxes

Ensure that pull boxes conform to the Standard Detail Drawings or Plan Detail Sheet. Install pull boxes as required by the Specifications and Plans.

1. Include provisions for drains in pull box excavations as specified.
2. Do not place the aggregate for the drain until the Engineer approves the excavation.
3. Do not set the pull box until the aggregate is in place.
4. Set the pull boxes in place, level, and install conduits as required. Conduit entrance shall be through the open bottom in Types 1, 2, 3, 4S and 5S. Conduit entrance shall be directly through cored holes in the side walls in Types 4 and 5. Conduit entrance shall be through the conduit terminators in Types 6 and 7.

   Adjust the location of the pull box if necessary to avoid obstacles.

   Where conduit entrance will be through the side wall in Types 4 and 5, or for conduit other than the terminator size provided in Types 6 and 7, use field cored conduit entrance holes in the side wall of the box. All field coring shall be made with a diamond-tipped masonry hole saw and according to the pull box manufacturer's recommendations.

   Use an approved HDPE to EPVC coupling or an underground-type conduit adhesive where joining conduit or conduit bodies of dissimilar materials, such as HDPE-to-EPVC sweeps into pull boxes or installing into pull box conduit terminators.

   - Do not locate pull boxes on the curb side of the signal pole in the intersection radius return
   - Install pull boxes so that the long dimension is parallel to the adjacent roadway
   - Install the pull box at a location that is level with the surrounding ground or pavement. Do not place a pull box in a ditch or depression. Unless otherwise shown in the Plans, when installed either in a sidewalk or in the ground, the top of the pull box shall be level with the sidewalk or ground surface.
5. Obtain the Engineer's approval, and begin backfilling and installing the frame and cover. Ground metal lids or covers.

BB. Span Wire and Span Wire Assemblies

Use span wire to support signal heads, cable, and other hardware only. Use messenger cable to support the aerial cable plant. Install span wire and messenger wire where specified in the Plans and in accordance with the Standard Detail Drawings. See Section 925 for information on span wire and messenger cable.

1. Install signal span wire not to exceed the sag specified by the pole manufacturer. Span wire used with timber pole installation shall have a minimum 2.5% sag. Span wire used with strain pole installation shall have a minimum 5% sag.
2. Use helper cables where specified in the Plans and on the Standard Detail Drawings.
3. For construction of a box or modified box span, use bullrings. Be consistent throughout the intersection in use of bull rings or strandvises. If bull rings are not used, standvises shall be interlocked.
4. Install 12 inch (300 mm) diameter drip loop wrapped three times at the cable entrance to signal heads. Arrange cable so that it enters the structure from the bottom of the drip loop. Use a 24 inch (600 mm) diameter drip loop where cables enter a weatherhead and use 24 inch (600 mm) sag at corners of a span.
5. Use aluminum ties, lashing rods, or aluminum wrap to attach cables to span wire. When using aluminum wrap or aluminum ties spaced at 6 inch (150 mm) increments. Aluminum wrap shall have at least three turns of wrap. Do not use lashing wire on span wire.
6. Ground all span wire and down guy assemblies as shown on Standard Detail Sheets. Bond all span wire together and bond to ground at every pole.

CC. Traffic Signal Heads

Place traffic signal heads according to the signal design and Plan Detail Drawings. Deviation from the Plans must be according to the MUTCD, current edition and at the Engineer's approval. Ensure all Traffic Signal Heads at an installation have the same appearance for the signal heads and the LED Modules. The Ramp Metering enforcement device shall be mounted on the back of one signal per lane and wired to the red display. The enforcement device shall be able to be viewed from downstream on the ramp.

1. Install traffic signal heads at least 17 feet (5.1 m), but no greater than 19 feet (5.7 m) over the roadway. All vertically attached signal head assemblies shall have a metal support plate installed within the top section (RED) indication of

the signal head for additional support and stability. Install Ramp Metering traffic signal heads as shown on the Plans Detail Drawings.

2. Adjust signal heads on the same approach to have the same vertical clearance.
   a. Measure the clearance from the pavement to the lowest part of the assembly, including brackets and back plates.
   b. Mount traffic signals on poles with a clearance of at least 12 feet (3.6 m) but no more than 19 feet (5.8m) above the sidewalk or pavement grade of the center of the highway, whichever grade is higher.
   c. Mount and adjust Ramp Metering traffic signals as per the Plan Detail Drawings.
   d. Mount and adjust Ramp Meter enforcement device (head) as per the Plan Detail Drawings.
3. Connect the signal cable to the wire in each signal head to provide the correct signal indication when the cables are connected to the controller cabinet back panels. Do not splice cables. Use wire nuts to make the connections to the LED signal modules leadin. Make all connections in the top section. Ensure that the black jacket is pulled into the signal head 6 inches (150 mm).
4. Install optically programmable (OP) signal heads as shown in the Plans and Standard Detail Sheet and as directed by the manufacturer.
5. Mount OP heads securely or tether them to limit movement.
6. Mask the OP lamp for directing visibility under the Engineer's supervision.
7. Tether signal heads that have tunnel visors longer than 12 inches (300 mm), at the discretion of the Engineer.
8. Attach signal heads to mast arms using rigid mounting brackets. See Section 925 for equipment information. Adjust signal heads on mast arms so that all red indications on the same mast arm are at the same elevation.
9. Install lane control heads for reversible lane systems and Ramp Metering heads as shown in the Plans and the Standard Detail Drawings. Center each signal over the lane or lanes under signal control.
10. Leave a vertical clearance for blank-out signs as shown on the Standard Detail Drawings. Use a spirit level to ensure that the bottom edge of each sign is horizontal.

DD. Pedestrian Signal Heads

Install pedestrian signal heads on wood, concrete, steel strain poles, wood or steel auxiliary poles, or metal pedestal poles. Do not mix pole mount methods at the same intersection installation.

Install the pedestrian signal heads as shown on the Standard Detail Drawings and the intersection Plan Sheets and Drawings.

Leave a vertical clearance from the bottom of the head to the ground level of least 10 feet (3 m) unless specified by the Engineer.

1. Pedestal Mounts

   Make pedestal mounts with a lower supporting assembly consisting of:
   a. A 4 inch (100 mm) slip-fitter bracket
   b. Hollow aluminum arms with a minimum inside cross-sectional area equal to a 1.5 inch (38 mm) pipe

      Use serrated locking devices that firmly hold the signal heads in the required alignment.
   c. For Pedestal Mounts using side hinge "clamshell". Secure "clamshell" to pedestal using 0.75 inch (19 mm) wide and 0.30 inch (0.75 mm) thick stainless steel bands.
2. Pole Mounts (Side of Pole)

   For Metal poles, use side hinge "clamshell" mounting hardware or hardware as described in Wood Pole, Metal Pole alternate, or pedestrian pole.
   a. Side Hinge "Clamshell"
      - Secure the hubs to metal or concrete poles using 0.75 inch (10 mm) wide and 0.030 inch (0.75 mm) thick stainless steel bands. Secure the hubs to wood poles using lag bolts.
   b. Wood Pole or Metal Pole alternate:

      Make pole mounts with the upper and lower assembly consisting of:

- A post arm with a minimum cross-sectional area equal to a 1.5 inch (38 mm) pipe
- A post hub plate that matches the outside pole contour
- Secure the hubs to metal or concrete poles using 0.75 inch (19 mm) wide and 0.030 inch (0.75mm) thick stainless steel bands. Secure the hubs to wood poles using lag bolts, or banding.

Space the junctions so that each pedestrian signal head can be directed toward approaching traffic as needed.

Use serrated locking devices that hold the pedestrian signal heads in alignment.

EE. Blank-out Signs

Install blank-out signs as shown on Plans or as follows:

1. Securely fasten the signs to a stationary structure or to a messenger strand support system.
2. Center each sign over the lane or lanes under sign control, where applicable.
3. Leave a vertical clearance for blank-out signs as shown in the Plans or in Subsection 647.3.05.EE, "Traffic Signal Heads." Use a spirit level to ensure that the bottom edge of each sign is horizontal.
4. Use terminal strips to connect each sign electrically to the external control box or cabinet.

FF. Battery Backup System (BBS)

Install Battery Backup System (BBS) if indicated on the Plans. Install in accordance with the option as indicated on the Plans and as directed by the Engineer.

With the Battery Backup submittal provide calculations for determining the size of the inverter and batteries based on the actual power requirements for the intersection installation. Ensure that all auxiliary items are included in the calculations. Ensure the submittal specifies the model number and the firmware revision that is being supplied.

Ensure that the external cabinet supplied meets the Section 925 Specifications and is base mounted next to the 332A cabinet as specified. Do not attach the battery external cabinet to the 332A cabinet unless otherwise specified. The external cabinet option allows for 2 separate configurations. Ensure that the correct configuration is installed in accordance with the Plans. Make all connections to the 332A cabinet through the base of the cabinets.

Provide date of manufacture of all batteries provided.

Ensure the BBS functions as required by the specifications. Ensure the "ON BATTERY" relay provides an input into the controller Alarm 2. Install the two hour run time circuitry from the normally open contacts in the BBS controller to the AC+ and the mercury coil terminal in the traffic signal cabinet.

Provide copy of all documentation (Operation and Maintenance Manual) for items supplied. Include with documentation any communications firmware and cable required to interrogate the unit for status, setup or logs.

647.3.06 Quality Acceptance

A. Testing Loop Detector Installation

Test each loop after installing the conductors in the slots cut in the pavement and before sealing.

- Perform a test where the loop wire is spliced to the shielded lead-in wire and where the shielded lead-in wire enters the controller cabinet
- If there are no splice points, such as in direct entry to the controller cabinet, only perform the tests at the controller
- Record the test results on the Loop Installation Data Sheet in Table 647-10, as shown in this section. Make copies of the data sheet as needed.
- Include the data sheets in the records, and place a copy in the controller cabinet.

Conduct the following five (5) tests to evaluate each loop installation for acceptance before sealing the loop in the pavement:

1. Induced AC Voltage Test

Read 0.05 V AC or less on a digital voltmeter or no deflection on the pointer of an analog meter.

2. Inductance

   Inductance (I) is measured in microhenries (mH), and the total inductance is equal to the inductance of loop plus inductance of the loop lead-in.

   Acceptable inductance is within 10 percent (10%) of the calculated value for a single loop with the design criteria listed in Table 647-8 and Table 647-9:

Table 647-8 Standard (Bi-Pole) Loops	
6 ft x 6 ft (3 turns) [1.8 m x 1.8 m (3 turns)]	I = 76 mH + 23 mH per 100 feet of loop lead-in cable I = 76 mH + 23 mH per 30 m of loop lead-in cable
6 ft x 30 ft (2 turns) [1.8 m x 9 m (2 turns)]	I = 126 mH + 23 mH per 100 feet of loop lead-in cable I = 126 mH + 23 mH per 30 m of loop lead-in cable
6 ft x 40 ft (2 turns) [1.8 m x 12 m (2 turns)]	I = 165 mH + 23 mH per 100 feet of loop lead-in cable I = 165 mH + 23 mH per 30 m of loop lead-in cable
6 ft x 50 ft (2 turns) [1.8 m x 15 m (2 turns)]	I = 205 mH + 23 mH per 100 feet of loop lead-in cable I = 205 mH + 23 mH per 30 m of loop lead-in cable
6 ft x 70 ft (2 turns) [1.8 m x 21 m (2 turns)]	I = 285 mH + 23 mH per 100 feet of loop lead-in cable I = 285 mH + 23 mH per 30 m of loop lead-in cable

Table 647-9 Quadrupole (QP) Loops	
6 ft x 30 ft (2, 4, 2 turns) [1.8 m x 9 m (2, 4, 2, turns)]	I = 269 mH + 23 mH per 100 feet of loop lead-in cable I = 269 mH + 23 mH per 30 m of loop lead-in cable
6 ft x 40 ft (2, 4, 2 turns) [1.8 m x 12 m (2, 4, 2 turns)]	I = 349 mH + 23 mH per 100 feet of loop lead-in cable I = 349 mH + 23 mH per 30 m of loop lead-in cable
6 ft x 50 ft (2, 4, 2 turns) [1.8 m x 15 m (2, 4, 2, turns)]	I = 429 mH + 23 mH per 100 feet of loop lead-in cable I = 429 mH + 23 mH per 30 m of loop lead-in cable
6 ft x 60 ft (2, 4, 2 turns) [1.8 m x 18 m (2, 4, 2, turns)]	I = 509 mH + 23 mH per 100 feet of loop lead-in cable I = 509 mH + 23 mH per 30 m of loop lead-in cable
6 ft x 70 ft (2, 4, 2 turns) [1.8 m x 21 m (2, 4, 2, turns)]	I = 589 mH + 23 mH per 100 feet of loop lead-in cable I = 589 mH + 23 mH per 30 m of loop lead-in cable

3. Leakage Resistance to Ground

   The resistance to ground shall be 5 Mohm or more.

4. Loop Resistance

   The resistance reading on an ohmmeter is approximately within ten percent (10%) of the calculated value:

   - Acceptable Resistance @ (dc @ 68 ºF [20 ºC]):ohms(µ)
   - No. 18 AWG wire: R = 29.4µ/mile (or) R = 5.5 x 10^{-3}µ/ft. Approximately 5.5 ohms per 1,000 feet of No. 18 AWG wire)[R = 18.3µ/km (or) R=18.3 x 10^{-3}µ/m]
   - No. 14 AWG wire: R = 13.32µ/mile (or) R = 2.523 x 10^{-3}µ/ft. Approximately 2.52 ohms per 1,000 feet of No. 14 AWG wire)[R = 8.3µ/km (or) R=8.3 x 10^{-3}µ/m]
   - No. 12 AWG wire: R = 5.2µ/mile (or) R = 9.85 x 10^{-4}µ/ft. Approximately 0.98 ohms per 1,000 feet of No. 12 AWG wire [R = 3.24µ/km (or) R = 3.24 x 10^{-3}µ/m]

5. Loop Q

Q at 50 kHz is greater than 5.

Report to the Engineer an out-of-range reading on any of the above tests. If a test is found unacceptable, remove the loop, install new wire, and repeat the test procedure.

Include in the test results:

- Type and model number of the equipment used (must be ohmmeter having a high resistance scale of R x 10 KW or greater)
- The last calibration date of the equipment and the scale used

Check the loop using an impedance tester to determine the natural operating frequency and impedance. Ensure that the completed units detect all motor vehicles. If the loop detection system does not meet the above test requirements, payment will not be made for work on the signal installation until corrections are completed.

Table 647-10 Loop Installation Data Sheet	
Conditions	
Project Number:	
Date:	
Contractor:	
Weather:	
Temperature:	
Pavement Condition - Wet ( ) or Dry ( )	
Location	
City or County:	Phase:
Intersection Name or Number:	Function:
Route Number(s) or Name (s):	Lane Location:
Installation or Plan Sheet Number:	No. of Turns:
Size and Type of Loop:	Downstream/Upstream: Down ( ) Up ( )
Distance from Stop Bar:	Distance E.O.P/Curb to Lead-in:
Distance Lead-in Cable:	
Material	
Loop Wire Color/Insulation Type/Gauge:	
Loop Lead-In Wire Color/Insulation Type/Gauge:	
Splice Point:	
Conduit Length from Curb/E.O.P. to Splice Point:	
Conduit Length from Splice Point to Cabinet:	
Sealant Type and Part Number:	
Sealant Manufacturer and Lot No.:	
Interconnect Wire Type and Length:	
Loop Tests	
1. Induced Voltage _____2. Inductance _____ microhenries	
3. Leakage Resistance to Ground _____ megohoms 4. Loop Resistance _____ ohms 5. Loop Q (Quality) _____ Q	
Comments	
Inspector's Name, and Title	

B. Field Tests

In addition to performing tests during installation and before turning on the equipment, perform the following tests on traffic signal circuits in the presence of the Engineer:

- Test each circuit for continuity

Test each circuit for grounds. If a test fails, repair the circuit immediately. New signals shall operate in the flash mode for three (3) days prior to beginning stop-and-go operation unless otherwise directed by the Traffic Engineer.

For Ramp Metering:

The Contractor shall submit to and obtain approval from the Engineer for Ramp Metering testing procedures for each specific Ramp Meter location. The testing procedure shall demonstrate that all components: hardware, cable, and connections furnished and installed by the Contractor operates correctly and that all functions are in conformance with the specifications.

At a minimum, the Contractor shall demonstrate to the Engineer:

- The IVDS and loop detectors at each location are functioning properly with expected accuracy as specified. IVDS burn-in period shall only be in conjunction with the Ramp Meter signal burn-in periodof 30 days.
- The Ramp Meter signals function properly at all stages, including non-metering, startup, metering, and shutdown.
- In multi-lane configurations, the Ramp Meter can operate a simultaneous release of vehicles from all lanes and as well as an alternating or staggered release of vehicles from the two (or three) lanes.
- Queue detectors are functioning as specified, including both queue detection and queue override.
- The Ramp Meter functions properly for both local traffic responsive and time of day operations.
- The advance warning sign can be clearly seen and can be activated and deactivated properly.
- The Ramp Meter can communicate properly with the hub/TMC.
- The traffic enforcement heads are operating as per the Plans and can be seen by enforcement personnel.

The Contractor shall coordinate closely with Engineer for conducting Ramp Meter field operational tests. Note: Pretest should be performed prior to calling the Engineer for formal field tests inspection. Pretest shall be defined as conducting all field tests in accordance with the Ramp Metering field testing procedures submitted and approved. Results of pretests shall be recorded and submitted to the Engineer. The Engineer may require the Contractor to address particular items noted in the pretest before beginning the actual field tests.

Operational test shall not begin until the field tests are accepted by the engineer that will be performed during the Engineer's inspection. Begin operational tests after the Engineer is satisfied that all work has been completed. After the Ramp Meter has been placed in operation, the Contractor, in coordination with the system integrator, shall demonstrate that all equipment furnished and installed by the Contractor operates with all software and firmware as specified.

After successful completion of the test procedure, each Ramp Meter assembly shall go through a burn-in period for 30 consecutive days of normal Ramp Metering operations. During the burn-in period, the Contractor shall ensure that all Contractor-supplied equipment operates without failures of any type. If any equipment component malfunctions or fails to provide the specified functionality during the 30-day burn-in period, the Contractor shall replace or repair the defective equipment within 48 hours of notification by the Engineer.

After the malfunctioning component(s) have been repaired or replaced to the satisfaction of the Engineer, the Contractor shall begin a new 30-day burn-in period. The new 30-day burn-in period shall apply only to equipment components supplied by the Contractor. In the event of a failure or malfunctioning of equipment furnished by others which prevents the 30-day burn-in test from continuing, the Engineer will suspend the burn-in test and resume when the other equipment failures are corrected.

C. Operational Tests and Equipment Activation

After the equipment is installed and the field tests are completed successfully the Contractor shall request an initial equipment inspection. The Engineer shall notify in writing the District Signal Engineer a minimum of 14 working days prior to the inspection. The District Signal Engineer shall provide an in depth inspection and provide a written punch list of items for the Contractor to correct. Within fourteen days of the notification the Contractor shall correct the items noted.

Prior to activating new equipment and before removal of any existing intersection control or equipment, test and ensure any communications equipment is functional.

In the event that programming of the controller application is not a pay item for the contract the Engineer will notify the District Signal Engineer a minimum of 14 working days prior to activating the equipment.

Prior to activating equipment all Inductance loop, video detection equipment and detection zones shall be functional and operational.

When defects are resolved, the District Signal Engineer will begin the Contractor's operational test period to demonstrate that every part of the system functions as specified. The operational test shall be concurrent for the entire project.

1. The operational test for the traffic signal and Ramp Metering projects shall be at least thirty (30) days of continuous, satisfactory operation.
2. If a component or system fails or shows unsatisfactory performance, the condition must be corrected and the test repeated until thirty (30) days of continuous satisfactory operation is obtained.
3. The District Traffic Engineer will send the Engineer and Construction Office a letter showing the start, termination, suspension, or successful completion of the operational test period.
4. The District Engineer may recommend payment only after the successful completion of the test period.
5. The Contractor shall obtain written acceptance of the signal installation from the District Traffic Operations Engineer before Final Acceptance.

Costs incurred during operational tests, including power consumption, shall be at the Contractor's expense and included in the price bid for Contract Items.

647.3.07 Contractor Warranty and Maintenance

A. Traffic Signal Equipment Maintenance

See Section 150.

If a signal that is the responsibility of the contractor is not functioning properly:

1. Non-Emergency

   Commence work on this signal within three (3) days of the written notice from the Engineer. Failure to respond shall result in a per calendar day charged against monies due or that may become due until the maintenance work is started. See Section 108.

   The Contractor shall be responsible for all materials, equipment and expertise necessary to correct signal malfunction or repair.

   The Department or local municipality will not be held responsible or liable for any alleged damage to the signal or as a result of the signal malfunction due to problems that may occur after the Department or local municipality forces make repairs.

   Upon Notice to Proceed, The Contractor shall check and make any needed adjustments to time clocks on a monthly basis. No additional payment shall be made for this requirement.

2. Emergency

   If the Engineer determines that the signal malfunction or failure is an operational hazard, the Contractor is to take corrective action within three (3) hours of the first attempt of notification. Response shall be considered only when qualified personnel and equipment are provided.

   Failure to respond within three (3) hours will result in a non-refundable deduction of money of $1,000.00 with an additional charge of $500.00 per hour after the first three (3) hours until qualified personnel and equipment arrives on site and begins corrective action.

   In addition, the cost of labor and material will be charged by the Department if the Department takes corrective action using its own forces or local municipality forces.

   Total charges will not exceed $5,000.00 (per emergency call) in addition to the material cost and labor incurred to make repairs by the Department or local municipality forces responding to the malfunction.

   The Department will not be held responsible or liable for any alleged damage to the signal or as a result of the signal malfunction due to problems that may occur after Department or local municipality forces make emergency repairs.

The Contractor shall be responsible for all materials and equipment necessary to correct signal malfunction or repair. Final Acceptance will not be given until payment for such work is received.

B. Warranties

Provide manufacturer's warranties or guarantees on electrical, electronic, or mechanical equipment furnished, except state-supplied equipment.

Ensure that warranties and/or guarantees are consistent with those provided as customary trade and industry standard practices; or as otherwise specified in the Plans, Standard Specifications, or Special Provisions.

Upon Final Acceptance, transfer the manufacturer and Contractor warranties or guarantees to the Engineer. Ensure that warranties are continuous and state that they are subject to transfer.

Acceptance or approval of the Work does not waiver warranties or guarantees where required by the Specifications. Final Acceptance will not be granted until all warranties and guarantees are received.

C. Guarantees

Repair and/or replace all equipment and material supplied under these Contract Documents which has been determined by the Engineer to not meet Specifications.

The Engineer reserves the sole right to determine suitability or unsuitability of the supplied equipment and material. The Contractor shall bear the total cost of delivery and transportation related to the repair and replacement of equipment and material throughout the duration of the Contract unless otherwise approved by the Engineer.

Transfer to the Engineer any warranties and guarantees remaining on all items after Final Acceptance. Perform transfer at 12:01 AM of the day following Final Acceptance.

647.4 Measurement

647.4.01 General

Traffic signal items complete, in place, and accepted of the kind, size, and type specified are measured as follows:

A. Traffic Signal Installation

Signal installation will be paid for by lump sum, including furnishing labor, materials, tools, equipment, and incidentals required to complete the work unless otherwise specified in this Subsection.

B. Communications Wire, Fiber Optic Cable

The number of feet (meters) of communications cable, wire or fiber optic cable is the actual number of linear feet (meters) of the size installed and accepted. Communications cable shall be paid for under Section 935.

C. Strain Poles, Traffic Signs

Highway signs are measured and paid for under Section 636. Strain poles are measured and paid for under Section 639.

D. Type 4, 4S, 5, 5S, 6 and 7 Pull Boxes

The number of pull boxes will be the actual number of pull boxes installed and accepted.

E. Loop Detector – Maintenance Milling and Resurfacing Projects

The number of loop detectors will be the actual number of loop detectors installed as specified in the Plans or as directed by the Engineer and accepted. Loop detector lead-in cable will not be measured separately for payment but will be included in the price submitted for Loop Detectors.

647.4.02 Limits

General Provisions 101 through 150.

647.5 Payment

647.5.01 General

The lump price bid for Traffic Signal and/or Ramp Meter Installation covers all Items of work in this Specification including furnishing labor, materials, tools, equipment, and incidentals required to complete the work.

Costs for installation, operation, maintenance, and removal of the traffic signal equipment are included under this Item.

Include payment for removal; disposal of existing pavement, shoulder surface, base and sub-grade; and restoration to original condition in the Contract Price for the items to which they pertain. They will not be paid for separately.

Furnishing, installing, and removing sheeting, bracing, and supports will not be paid for separately, but is included in the Contract Prices for other items.

No additional payment will be made for testing and storing State-supplied or Contractor-furnished traffic signal equipment.

No payment will be made for individual items unless a pay item is included in the Plans for the specific item.

Type 4, 4S, 5, 5S, 6, and 7 pull boxes will be paid for per each. Loop Detector will be paid for per each.

Payment will be made under:

Item No. 647	Traffic signal installation no-	Per lump sum
Item No. 647	Pull Box PB4	Per each
Item No. 647	Pull Box PB4S	Per each
Item No. 647	Pull Box PB5	Per each
Item No. 647	Pull Box PB5S	Per each
Item No. 647	Pull Box PB6	Per each
Item No. 647	Pull Box PB7	Per each
Item No. 647	Loop Detector	Per each

Payment for various elements of traffic signals will be as shown on the Plans.

A. Partial Payment

The Contractor may initiate a partial payment process for the lump sum traffic signal Items by submitting a written request to the Engineer. If the Engineer approves this request, payment will be made as follows:

Underground (loops, pull boxes, and conduits)	20%
Overhead (span, heads, poles, push buttons)	30%
Cabinet, contents, and base	20%
Successful completion of operational test	10%

B. Additional Items

Payment Items related to Section 647 are described in the following sections:

Strain Poles	Section 639
Highway Lighting	Section 680
Lighting Standards and Luminaries	Section 681
Electrical Wire, Cable, and Conduit*	Section 682
Grassing	Section 700
Timber Poles	Section 639 and Subsection 861.2.02
Sign Blanks	Section 912
Reflectorization Materials	Section 913
Traffic Signal Equipment/Ramp Metering Equip.	Section 925
* Payment for conduit installation shall be as described in Section 682 unless conduit installation is performed as part of a traffic signal installation, in which case measurement and payment is a part of the complete traffic signal installation. Payment is Lump Sum, unless listed as a separate pay item.	

647.5.02 Adjustments

General Provisions 101 through 150.

Section 648—Traffic Impact Attenuator

648.1 General Description

This work includes furnishing and installing impact attenuator units/arrays to conform with Plan locations and details and/or as directed by the Engineer. All impact attenuator units/arrays shall be tested and approved at the specified NCHRP 350 Test Level.

648.1.01 Definitions

General Provisions 101 through 150.

Gating-A gating end treatment allows a vehicle impacting the nose or the side of the unit at an angle near the nose to pass through the device

Non- Gating-A non-gating end treatment is capable of redirecting a vehicle impacting the nose or the side of the unit along the unit's entire length.

648.1.02 Related References

A. Standard Specifications

General Provisions 101 through 150

B. Referenced Documents

National Cooperative Highway Research Program (NCHRP) Report 350.

ASTM A 123/A 123M

QPL 64

Roadside Design Guide

648.1.03 Submittals

A. Installation Drawings

Submit all required certifications, test reports and drawings of details for completing the installation. Obtain Engineer's approval of these documents before beginning work on attenuator installation. Portable Impact Attenuator arrays shall meet the requirements of Ga. Std. 4960 and manufacturer specifications.

B. Manufacturer's Information

Submit certification from the manufacturer that the attenuator unit/array and its interconnecting hardware replicates an NCHRP-350 approved attenuator in an accepted letter from the FHWA. Furnish items such as manufacturer's brochures or specifications that completely outline the manufacturer's recommendations for materials and installation methods. All workmanship and materials are subject to the Engineer's approval.

648.2 Materials

A. Attenuator

1. Ensure that materials are in accordance with the manufacturer's recommendations, specifications and details.
2. Use attenuators that have been classified as "accepted" by the Department's Office of Materials and approved by the Federal Highway Administration (FHWA) as meeting NCHRP-350 for the test level specified.
3. Where restoration and/or repair cannot be accomplished without the necessity of removing the unit/array from the original location, ensure replacement unit/array installation upon removal of the damaged unit/array. Furnishing, installing and maintaining the replacement will be at no additional cost.
4. Where required, ensure the approach end of the attenuator is equipped with a reflectorized object marker in accordance with Plan Details. The object marker may be furnished by the manufacturer of the attenuator or by others. Ensure that the front most section of the unit (the "nose") is yellow in color unless specified otherwise.
5. Where required, use an approved back-up system as specified in the Plans.
6. For non-gating attenuators, anchor the attenuator to the pavement according to a system recommended by the manufacturer for the type pavement encountered.
7. Use Class "A" concrete for reinforced concrete pads, concrete back up if used, and concrete transition where required.
8. Use metal components and hardware galvanized according to ASTM A 123/A 123M unless otherwise specified. Ensure all metal components and hardware of permanent attenuators are free of corrosion when shipped.
9. In freezing conditions, water filled attenuators shall be treated according to the manufacturer's recommendations.

648.2.01 Delivery, Storage, and Handling

A. General

General Provisions 101 through 150.

648.3 Construction Requirements

648.3.01 Personnel

General Provisions 101 through 150.

648.3.02 Equipment

General Provisions 101 through 150.

648.3.03 Preparation

General Provisions 101 through 150

648.3.04 Fabrication

A. Design Criteria and Type Selection

The Impact Attenuator Unit/array Type will be shown on the plans and designated by four characters.

- First character

  Indicates the type of permanent installation.

  The letter "P" designates a permanent (non-gating) installation.

  The letter “S” designates a permanent self restoring (non-gating) installation which is capable of withstanding multiple hits without requiring repair or adjustment.
- Second character

  Designates the required NCHRP test level.
- Third character

  Indicates the traffic flow direction(s).

  The letter "B" indicates bi-directional traffic typical for median applications or when the unit is installed on the shoulder of a two-lane, two-way traffic facility. Bi-directional means traffic flows in opposite directions at the site of the attenuator installation.

  The letter "U" indicates uni-directional traffic flow typical for gore areas. Uni-directional means traffic on both sides traveling the same direction, from the nose to the rear of the unit.

  The letter "S" indicates traffic flow in one direction on a single side only, typical for a unit located on the outside shoulder of a roadway with one-way traffic and the other side of the attenuator not being exposed to traffic.
- Fourth character

  Indicates the numerical value of the width, in inches (millimeters), of the base of the rigid object that the attenuator will be shielding.

  At bridge columns, this character is typically the width of the column plus the barrier base widths on the column sides at the pavement surface.

B. Example

A Type P-3-U-60 attenuator designates a permanent installation tested and approved at NCHRP test level 3

Uni-directional traffic flow

a 60” (1500 mm) wide base for the rigid object being shielded.

Temporary portable units/arrays may be either gating or non-gating based on construction sequencing and/or field conditions, See Specification Section 150. Unless otherwise specified, all permanent attenuators shall be non-gating.

648.3.05 Construction

Field locate the position of the attenuator nose as shown on the plans prior to beginning the installation. Have any variations approved by the Engineer.

If the length of the attenuator unit/array is less than that indicated in the plan details for the specified conditions, the length of the concrete transition section or the length of the longitudinal barrier shall be increased as needed to provide a proper beginning point for the attenuator nose as shown in the plans.

The length of the system will be the combined length of the attenuator unit/array, the back-up system and any required transition. The length of the system shall not be excessive to the extent that it intrudes appreciably within the clear offset distance as shown on the plans.

The increased length of transition or barrier is considered as an incidental part of the system and will not be itemized separately.

Temporary portable units/arrays shall be installed, moved, reinstalled and maintained as required.

648.3.06 Quality Assurance

Obtain certification from the manufacturer that the impact attenuator unit/array installed meets all required approvals and specifications and furnish these to the Engineer.

Furnish any mill test/galvanizing test reports and heat numbers for all metal components of the unit per current requirements of the Department's Office of Materials.

648.3.07 Contractor Warranty and Maintenance

General Provisions 101 through 150.

648.4 Measurement

Each traffic impact attenuator of the type specified, complete, in place and accepted at its location will be measured by the unit/array, including components, hardware, anchors, incidentals, freeze treated water or sand, and labor for each installation shown on the plans or as directed by the Engineer.

Site preparation work, as described under 648.3.03, “Preparation” is measured and paid for separately under the respective items involved unless otherwise specified.

Temporary units/arrays will be measured for payment only once, regardless of how often they are moved. See Specification Section 150.

648.4.01 Limits

General Provisions 101 through 150.

648.5 Payment

Impact Attenuator Units/Arrays will be paid for per each type specified. Payment is full compensation for all materials, labor, and incidentals necessary to complete the Item including installing, moving, reinstalling and maintaining Units/Arrays as required.

Payment will also include the back-up system and transitions where required.

Payment will be made under:

Item No. 648	Impact attenuator unit, Type P-	Per each
Item No. 648	Impact attenuator unit, Type S-	Per each

648.5.01 Adjustments

General Provisions 101 through 150.

Section 649—Concrete Glare Screen

649.1 General Description

This work includes erecting a Portland cement concrete glare screen according to Plan dimensions on top of a concrete median barrier.

649.1.01 Definitions

General Provisions 101 through 150.

649.1.02 Related References

A. Standard Specifications

Section 621—Concrete Barrier

B. Referenced Documents

General Provisions 101 through 150.

649.1.03 Submittals

General Provisions 101 through 150.

649.2 Materials

Use materials that comply with Section 621 and the Plan details.

649.2.01 Delivery, Storage, and Handling

General Provisions 101 through 150.

649.3 Construction Requirements

649.3.01 Personnel

General Provisions 101 through 150.

649.3.02 Equipment

General Provisions 101 through 150.

649.3.03 Preparation

General Provisions 101 through 150.

649.3.04 Fabrication

General Provisions 101 through 150.

649.3.05 Construction

Construct the glare screen using one of the following alternatives:

A. Alternative One

Cast the median barrier and while the concrete is still plastic, insert "D" bars into the fresh concrete as indicated on the Plans. Wait until the median barrier concrete has reached a compressive strength of 2000 psi (14 MPa) or an age of seven days. Then place a second course of barrier, of the dimensions shown on the Plans, on top of the first course and finish and cure according to Subsections 621.3.05.C and 621.3.05.D.

B. Alternative Two

As an alternative to inserting "D" bars into the plastic concrete, wait until the median barrier concrete has reached a compressive strength of 2,000 psi (14 MPa), then drill holes for the "D" bars and epoxy them in place.

Construct the second course of barrier on top of the first course according to Plan dimensions. Finish and cure according to Subsections 621.3.05.C and 621.3.05.D.

649.3.06 Quality Acceptance

General Provisions 101 through 150.

649.3.07 Contractor Warranty and Maintenance

General Provisions 101 through 150.

649.4 Measurement

Concrete glare screen is measured for payment in linear feet (meters) of accepted work of each specified height. The surface is measured along the top of the glare screen.

649.4.01 Limits

General Provisions 101 through 150.

649.5 Payment

This work will be paid for at the Contract Unit Price per linear foot (meter) for each specified height. Payment will be full compensation for furnishing materials and performing the Work.

Payment will be made under:

Item No. 649	Concrete glare screen (height)	Per linear foot (meter)

649.5.01 Adjustments

General Provisions 101 through 150.

Section 651—Raised Traffic Bars

651.1 General Description

This work includes furnishing and placing raised traffic bars according to the type, locations, and specifications in the Plans.

651.1.01 Definitions

General Provisions 101 through 150.

651.1.02 Related References

A. Standard Specifications

Section 500—Concrete Structures

Section 886—Adhesive (Epoxy Resin)

B. Referenced Documents

General Provisions 101 through 150.

651.1.03 Submittals

General Provisions 101 through 150.

651.2 Materials

Ensure that materials meet the requirements of the following Specifications:

Material	Section
Adhesive (Epoxy Resin)	Section 886
Concrete, Class A, Air Entrained	Section 500

651.2.01 Delivery, Storage, and Handling

General Provisions 101 through 150.

651.3 Construction Requirements

651.3.01 Personnel

General Provisions 101 through 150.

651.3.02 Equipment

General Provisions 101 through 150.

651.3.03 Preparation

General Provisions 101 through 150.

651.3.04 Fabrication

General Provisions 101 through 150.

651.3.05 Construction

A. Precasting

1. Concrete

   Use concrete materials, and mix and place concrete, to comply with Section 500 for Class A, Air Entrained.

2. Forms

   Use forms that meet the requirements of Section 500. Make the insides of forms accessible for tamping and vibrating the concrete.

3. Finish

   Unless otherwise specified on the Plans, finish bars according to Subsection 500.3.05.AB. For unformed areas, use Type IV—Floated Surface Finish, unbroomed. For formed areas, use Type I—Ordinary Surface Finish.

4. Curing

   Cure bars according to Subsection 500.3.05.Z, except do not use curing compound on the bottom surfaces.

B. Installation

Follow these steps to cement bars to the pavement:

1. Sandblast clean the highway surface of dirt, curing compound, grease, oil, moisture, loose or unsound layers, and other material that would prevent the bar adhesive from bonding.
2. Use epoxy resin type IR or IS adhesive as follows:
   a. Use type IR when pavement temperature is between 50 ° to 60 °F (10 ° to 15 °C), or when traffic conditions require a rapid set.
   b. Use type IS when pavement temperatures are above 60 °F (15 °C) and when traffic conditions permit.
   c. Do not place bars when pavement temperatures drop below 50 °F (10 °C).
3. Place enough adhesive on the cleaned pavement, or on the bottom of the bar, to completely cover the area of contact with no voids. Allow a slight amount of adhesive to extrude from all sides of the bar after it has been pressed into place.
4. Position the bar and press it firmly into the pavement. Immediately and completely remove excess adhesive around the edge of the bar with a clean, absorbent cloth. Do not use thinners or solvents to remove the adhesive. Protect the bar from impact until the adhesive hardens to the degree designated by the Engineer.

C. Adhesive Qualities

Do not use a viscous or partially set batch of adhesive that does not extrude from under the bar edges when pressed to the pavement.

Do not heat any adhesive above 120 °F (49 ºC).

Prepare adhesive as follows:

1. Before combining Package A and B, thoroughly stir each package. Reject material that cannot be readily redispersed.

2. After stirring, mix one volume from Package A with one volume from Package B until obtaining a uniform color with no visible streaks of either component.
3. Cement bars in place within 10 minutes of starting to mix the adhesive.
4. To prolong the pot life of the adhesive, either let it cool after mixing the components or spread out a thin layer on a board before applying it.
5. When an approved fast setting adhesive is used, mix the components using a 2-component type automatic mixing and extrusion apparatus. Place the bars immediately after the adhesive has been mixed and extruded.

651.3.06 Quality Acceptance

General Provisions 101 through 150.

651.3.07 Contractor Warranty and Maintenance

General Provisions 101 through 150.

651.4 Measurement

Complete and in-place raised traffic bars, of the type specified, are measured by the linear foot (meter) along the bottom front face of the bar.

651.4.01 Limits

General Provisions 101 through 150.

651.5 Payment

Raised traffic bars will be paid for at the Contract Unit Price per linear foot (meter). Payment is full compensation for furnishing and installing the bar.

Payment will be made under:

Item No. 651.	Raised traffic bars, type_____	Per linear foot (meter)

651.5.01 Adjustments

General Provisions 101 through 150.

Section 652—Painting Traffic Stripe

652.1 General Description

This work includes furnishing and applying reflectorized high build standard and high build wet weather traffic line paint according to the Plans and these Specifications.

This Item also includes applying words and symbols according to Plan details, Specifications, and the current Manual on Uniform Traffic Control Devices.

652.1.01 Definitions

Painted Stripes: Solid or broken (skip) lines. The location and color are designated on the Plans.

Skip Traffic Stripes: Painted segments with unpainted gaps as specified on the Plans. The location and color are designated on the Plans.

652.1.02 Related References

A. Standard Specifications

General Provisions 101 through 150.

Section 656—Removal of Pavement Markings

Section 870 – Paint

EPA Method 3052

EPA Method 6010

B. Referenced Documents

ASTM	ASTM	Other
D711	E4941	AASHTO M 247
D3335	E1710	QPL 46, QPL 71
D3718	E2177	SOP 39
D4144		TT-P-1952E

652.1.03 Submittals

General Provisions 101 through 150.

652.2 Materials

Ensure that materials for painting traffic stripe, words, and symbols meet the following requirements:

A. Traffic Line Paint

Material	Section
Traffic Line Paint 6A and 6B	870.2.02.A.4 and 870.2.02.A.5

Glass Spheres and Reflective Composite Optics

Use glass spheres and/or reflective composite optics for the reflective media system that ensures the high build paint pavement markings meet the reflectance performance requirements in Subsection 652.3.06. Do not use glass spheres and/or reflective composite optics containing greater then 200 ppm total arsenic, 200 ppm total antimony, or 200 ppm total lead when tested according to the most recent US EPA Methods 3052 and 6010, or other approved methods.

Ensure glass spheres meet the requirements of AAHTO M 247. Use glass spheres produced from an approved source listed on QPL 71. Glass beads conforming to an alternative gradation may be used provided all other requirements of AASHTO M 247 and this specification are met. Obtain approval from the Office of Materials to use alternate gradations.

652.2.01 Delivery, Storage, and Handling

A. Storage

Ensure the paint does not cake, liver, thicken, curdle, gel, or show any other objectionable properties after storage for six months above 32 °F (0 °C).

B. Handling

Mix thoroughly before use.

652.3 Construction Requirements

652.3.01 Personnel

General Provisions 101 through 150.

652.3.02 Equipment

A. Traveling Traffic Stripe Painter

Use a traffic stripe painter that can travel at a predetermined speed both uphill and downhill, applying paint uniformly. Ensure that the painter feeds paint under pressure through nozzles spraying directly onto the pavement.

Use a paint machine equipped with the following:

1. Three adjacent spray nozzles capable of simultaneously applying separate stripes, either solid or skip, in any pattern.
2. Nozzles equipped with the following:
   - Cutoff valves for automatically applying broken or skip lines
   - A mechanical bead dispenser that operates simultaneously with the spray nozzle to uniformly distribute glass spheres and/or reflective composite optics at an application rate to meet the reflectance performance requirements in Subsection 652.3.06.
   - Line-guides consisting of metallic shrouds or air blasts
3. Tanks with mechanical agitators
4. Small, portable applicators or other special equipment as needed

B. Hand Painting Equipment

Use brushes, templates, and guides when hand painting.

C. Cleaning Equipment

Use brushes, brooms, scrapers, grinders, high-pressure water jets, or air blasters to remove dirt, dust, grease, oil, and other foreign matter from painting surfaces without damaging the underlying pavement.

652.3.03 Preparation

Locate approved paint manufacturers on QPL 46.

Before starting each day’s work, thoroughly clean paint machine tanks, connections, and spray nozzles, using the appropriate solvent.

Thoroughly mix traffic stripe paint in the shipping container before putting it into machine tanks.

Before painting, thoroughly clean pavement surfaces of dust, dirt, grease, oil, and all other foreign matter.

652.3.04 Fabrication

General Provisions 101 through 150.

652.3.05 Construction

A. Alignment

Ensure that the traffic stripe is the specified length, width, and placement. On sections where no previously applied markings are present, ensure accurate stripe location by establishing control points at spaced intervals. The Engineer will approve control points.

B. Application

Apply traffic stripe paint by machine. If areas or markings are not adaptable to machine application, use hand equipment.

1. Application Rate

Paint will be subject to application rate checks.

Apply 5 in (125 mm) wide traffic stripe at the following minimum rates:

a. Solid Traffic Stripe Paint: At least 34 gal/mile (80 L/km)

b. Skip Traffic Stripe Paint: At least 10 gal/mile (24 L/km)

NOTE: Change minimum rate proportionately for varying stripe widths.

2. Thickness

   Maintain a 25 mils (0.58mm) minimum wet average thickness above the surface of the pavement.

3. Do not apply paint to areas of pavement when:
   - The surface is moist or covered with foreign matter.
   - Air temperature in the shade is below 50 °F (10 °C)
   - Wind causes dust to land on prepared areas or blows paint and glass spheres and/or reflective composite optics around during application

4. Apply a layer of glass spheres and/or reflective composite optics immediately after laying the paint. Apply glass spheres and/or reflective composite optics at a rate to meet the reflectance performance requirements in Subsection 652.3.06.

C. Protective Measures

Protect newly applied paint as follows:

1. Traffic

   Control and protect traffic with warning and directional signs during painting. Set up warning signs before beginning each operation and place signs well ahead of the painting equipment. When necessary, use a pilot car to protect both the traffic and the painting operation.

2. Fresh Paint

   Protect the freshly painted stripe using cones or drums. Repair stripe damage or pavement smudges caused by traffic according to Subsection 652.3.06.

D. Appearance and Tolerance of Variance

Continually deviating from stated dimensions is cause for stopping the work and removing the nonconforming stripe. (See Section 656—Removal of Pavement Markings.) Adhere to the following measurements:

1. Width

   Do not lay stripe less than the specified width. Do not lay stripe more than 1/2 in (13 mm) over the specified width.

2. Length

   Ensure that the 10 ft (3 m) painted skip stripe and the 30 ft (10 m) gap between painted segments vary no more than ± 1 ft (300 mm) each.

3. Alignment

   a. Ensure that the stripe does not deviate from the intended alignment by more than 1 in (25 m) on straight lines or curves of 1 degree or less.

   b. Ensure that the stripe does not deviate by more than 2 in (50 mm) on curves exceeding 1 degree.

652.3.06 Quality Acceptance

A. General

For a minimum of 30 days from the time of placement, ensure the high build traffic paint pavement marking material shows no signs of failure due to blistering, excessive cracking, shipping, bleeding, staining, discoloration, oil content of the pavement materials, smearing or spreading under heat, deterioration due to contact with grease deposits, oil, diesel fuel, or gasoline drippings, spilling, poor adhesion to the pavement material, vehicular damage, and normal wear. In the event that failures mentioned above occur, ensure corrective work is completed at no additional cost to the Department.

Obtain pavement marking retroreflectivity values with a 30 meter geometry retroreflectometer.

B. Initial Retroreflectivity

1. Longitudinal Lines

   Within 30 days of installation, ensure the in-place markings meet the following minimum reflectance values:

   a. High Build Wet Weather Traffic Paint

	White	Yellow
Dry (ASTM E 1710)	300 mcd/lux/m^2	250 mcd/lux/m^2
Wet recovery (ASTM E 2177)	150 mcd/lux/m^2	100 mcd/lux/m^2

   b. High Build Standard Traffic Paint

	White	Yellow
Dry (ASTM E 1710)	300 mcd/lux/m^2	250 mcd/lux/m^2

   For each center line, edge line, and skip line, measure retroreflectivity 9 times for each mile; 3 times within the first 500 feet, 3 times in the middle, and 3 times within the last 500 feet. For projects less than one mile in length, measure retroreflectivity 9 times as above.

   Record all retro reflectivity measurements on the form OMR CVP 66 in SOP 39.

2. Messages, Symbols, and Transverse Lines

   Within 30 days of installation, ensure the in-place markings when tested according to ASTM E 1710 meet the following minimum reflectance value of 275 mcd/lux/m^2.

   Perform at a minimum, one retroreflectivity measurement at one message, one symbol and one transverse line per intersection. Take one measurement per mile for locations other than intersections (i.e. school messages, railroad messages, bike symbols etc.)

C. Six Month Retroreflectivity (Longitudinal Lines)

Maintain the following minimum reflectance values for 180 days after installation:

1. High Build Wet Weather Traffic Paint

	White	Yellow
Dry (ASTM E 1710)	300 mcd/lux/m^2	250 mcd/lux/m^2
Wet recovery (ASTM E 2177)	150 mcd/lux/m^2	100 mcd/lux/m^2

2. High Build Standard Traffic Paint

	White	Yellow
Dry (ASTM E 1710)	300 mcd/lux/m^2	250 mcd/lux/m^2

Retest the in-place markings according to Subsection 652.3.06.B.1, 180 days after installation to ensure these minimum retroreflectance values are maintained.

NOTE: The Contractor is responsible for retroreflectivity testing. Furnish initial test results to the Engineer within 30 days of application. Furnish 6 month test results to the Engineer within 180 days of application or prior to final acceptance, whichever comes first.

D. Thickness

At the time of installation, check the thicknesses on all skip lines, edge lines and center lines according to ASTM D 4114.

For each center line, edge line, and skip line, measure thickness above the pavement 3 times for each mile; once within the first 500 feet, once in the middle, and once within the last 500 feet. For projects less than one mile in length, measure the thickness above the pavement 3 times.

Record thickness measurements on the form OMR CVP 66 in SOP 39.

Submit results to the Engineer.

E. Corrective Work

For each mile section, if paint stripe fails to meet Plan details or Specifications or deviates from stated dimensions, correct it at no additional cost to the Department. If removal of pavement markings is necessary, perform it according to Section 656 and place it according to this Specification. No additional payment will be made for removal and replacement of unsatisfactory striping. Ensure corrective work is completed at no additional cost to the Department. Perform testing according to this Specification. Any retest due to failures will be performed at no additional cost to the Department. Furnish all test reports to the Department.

Retroreflectivity and Thickness Longitudinal Line Deficiency: A deficiency will ensure when two or more Location Average results as recorded on form OMR CVP 66 within a One-Mile Section do not meet the performance criteria herein. The entire line within this one mile section will be determined to be deficient. If the evaluated section is less than 1.0 mile, a single Location Average result not meeting the performance criteria herein will result in the entire line to be determined to be deficient.

Retroreflectivity Transverse Markings and Symbol Deficiency: A single Location Average result on the marking or symbol not meeting the performance criteria herein will result in the marking or symbol to be determined to be deficient.

F. Acceptance Criteria

Ensure that stripes and segments of stripes are clean-cut and uniform. Markings that do not appear uniform or satisfactory, either during the day or night, or do not meet Specifications, will be corrected at the Contractor's expense. Paint will be subject to application rate checks.

1. When correcting a deviation that exceeds the permissible tolerance in alignment, do the following:
   a. Remove the affected portion of stripe, plus an additional 25 ft (8 m) in each direction according to Section 656—Removal of Pavement Markings.
   b. Paint a new stripe according to these Specifications.
2. Removal of Excess Paint

   Remove misted, dripped, or spattered paint to the Engineer's satisfaction. Do not damage the underlying pavement during removal.

   Refer to the applicable portions of Section 656—Removal of Pavement Markings.

652.3.07 Contractor Warranty and Maintenance

General Provisions 101 through 150.

652.4 Measurement

When traffic stripe is paid for by the square yard (meter), the number of square yards (meters) painted is measured and the space between stripes is included in the overall measurement.

Linear measurements are made on the painted surface by an electronic measuring device attached to a vehicle. On curves, chord measurements, not exceeding 100 linear feet (30 linear meters), are used.

Traffic stripe and markings, complete in place, are measured and accepted for payment as follows:

A. Solid Traffic Stripe

Solid traffic stripe is measured by the linear foot (meter), linear mile (kilometer), or square yard (meter). Breaks or omissions in solid lines or stripes at street or road intersections are not measured.

B. Skip Traffic Stripe

Skip traffic stripe is measured by the gross linear foot (meter) or gross linear mile (kilometer). Unpainted spaces between the stripes are included in the overall measurements if the Plan ratio of 1 to 3 remains uninterrupted. Measurement begins and ends on a stripe.

C. Pavement Markings

Markings are words and symbols completed according to Plan dimensions. Markings are measured by the unit.

652.4.01 Limits

General Provisions 101 through 150.

652.5 Payment

Payment will be full compensation for the work under this Section, including the following:

- Cleaning and preparing surfaces
- Furnishing materials, including paints, beads, and thinners
- Applying, curing, and protecting paints
- Protecting traffic, including providing and placing necessary warning signs
- Furnishing tools, machines, and other equipment necessary to complete the Item

Payment will be made under:

Item No. 652	Solid traffic stripe, _____ in (mm), (color)	Per linear mile (kilometer)
Item No. 652	Skip traffic stripe, _____in (mm), (color)	Per gross linear mile (kilometer)
Item No. 652	Solid traffic stripe, _____in (mm), (color)	Per linear foot (meter)
Item No. 652	Skip traffic stripe, _____in (mm), (color)	Per gross linear foot (meter)
Item No. 652	Pavement markings, words, and symbols, (color)	Per each
Item No. 652	Traffic stripe, _____in (mm), (color)	Per square yard (meter)
Item No. 652	Solid traffic stripe, High Build Wet Weather, _____ in (mm), (color)	Per linear mile (kilometer)
Item No. 652	Skip traffic stripe, High Build Wet Weather, _____ in (mm), (color)	Per gross linear mile (kilometer)
Item No. 652	Solid traffic stripe, High Build Wet Weather, _____in (mm), (color)	Per linear foot (meter)
Item No. 652	Skip traffic stripe, High Build Wet Weather, _____in (mm), (color)	Per gross linear foot (meter)
Item No. 652	Pavement markings, High Build Wet Weather, words, and symbols, (color)	Per each
Item No. 652	Traffic stripe, High Build Wet Weather, _____in (mm), (color)	Per square yard (meter)

652.4.01 Adjustments

General Provisions 101 through 150.

Section 653—Thermoplastic Traffic Stripe

653.1 General Description

This work includes furnishing and applying standard and wet weather thermoplastic reflectorized pavement marking compound. Ensure markings conform to Plan details and locations, these Specifications, and the Manual on Uniform Traffic Control Devices.

Thermoplastic traffic stripe consists of solid or broken (skip) lines, words, and symbols according to Plan color, type, and location.

653.1.01 Definitions

Thermoplastic Marking Compound: A heated compound extruded or mechanically sprayed on the pavement that cools to pavement temperature. When combined with glass spheres and/or reflective composite optics it produces a reflectorized pavement marking.

Short Lines: Crosswalks, stop bars, arrows, symbols, and crosshatching. Extrude short lines rather than spraying them on.

653.1.02 Related References

A. Specifications

Section 656—Removal of Pavement Markings

B. Referenced Documents

QPL 46

QPL 71

SOP 37

SOP 38

SOP 39

Federal Test Standard Number 595B

Federal Test Standard Number 695B

AASHTO M 247

AASHTO M 249

ASTM D 92

ASTM D 476

ASTM D 2240

ASTM D 4960

ASTM E 1710

ASTM E 2177

40 CFR 261.24

EPA Method 3050

EPA Method 3052

EPA Method 6010

EPA Method 7000A

653.1.03 Submittals

Ensure the producers of the thermoplastic compound and the producers of both the intermix and drop-on glass spheres furnish to the Department copies of certified test reports showing results of all tests specified in this Section. Also ensure that producers certify that the materials meet the other requirements of this Section by submitting copies of certification at the time of sampling.

653.2 Materials

A. General Characteristics of Thermoplastic

Use thermoplastic material produced from an approved source listed on QPL 46. Use thermoplastic material that meets the requirements of AASHTO M 249 with the following exceptions:

1. Material Composition

   Ensure the resin of the thermoplastic material is an alkyd binder. Ensure the alkyd binder consists of a mixture of synthetic resins and a high boiling point plasticizer. Ensure at least one synthetic resin is a solid at room temperature. Ensure at least 50% of the binder composition is 100% maleic-modified glycerol ester resin. Ensure at least 18% by weight of the entire material formulation consists of binder. Do not use alkyd binder that contains petroleum based hydrocarbon resins. Ensure the finished thermoplastic material is not adversely affected by contact with pavement materials or by petroleum droppings from traffic. Use thermoplastic material that has been evaluated (2 year field evaluation) by the National Transportation Product Evaluation Panel (NTPEP) test facility or other approved test facility.

2. Suitability for Markings

   Use thermoplastic material that is especially compounded for traffic markings and has the following characteristics:

   - Prevents markings from smearing or spreading under normal traffic conditions at temperatures below 120 ^{o}F (49 ^{o}C)
   - Gives a uniform cross section, with pigment evenly dispersed throughout the material
   - Has a uniform material density and character throughout its thickness
   - Allows the stripe to maintain its original dimensions and placement
   - Ensures that the exposed surface is free from tack and is not slippery when wet
   - Does not lift from the pavement in freezing weather
   - Has cold ductility properties that permit normal movement with the road surface without chipping or cracking

3. Color

   Confirm the color of thermoplastic as follows:

   a. White – Use titanium dioxide that meets the requirements of ASTM D 476, Type II, Rutile, as the pigment for white thermoplastic material. Do not use anatase titanium dioxide pigment. Ensure thermoplastic material is free from dirt or tint. Ensure white thermoplastic material heated for 240 ± 5 minutes at 425 ± 3 ºF (218 ± 3 ºC) and cooled to 77 ± 3 ºF (25 ± 2 ºC) matches Federal Test Standard Number 695B-Color 17925. Ensure the material, when compared to the magnesium oxide standard using a standard color spectrophotometer according to ASTM D 4960, meets the following:

Scale	Definition	Magnesium Oxide Standard	Sample
Rd	Reflectance	100	75 min.
a	Redness-Greenness	0	-5 to + 5
b	Yellowness-Blueness	0	-10 to + 10

   b. Yellow – Use only non-hazardous pigments as defined by the Resource Conservation and Recovery Act (RCRA) Subarticle C rules, table 1 of 40 CFR 261.24 “Toxicity Characteristic”. Do not use yellow thermoplastic containing more than 3.0 ppm lead by weight when tested in accordance with the most recent EPA Methods 3050 and 6010 or 7000. Ensure yellow thermoplastic material heated for 240 ± 5 minutes at 425 ± 3 ºF

(218 ± 2 ºC) and cooled to 77 ± 3 ºF (25 ± 2 ºC) matches Federal Test Standard Number 595B-Color 13538. Ensure the material, when compared to PR#1 Chart using a standard color spectrophotometer according to ASTM D 4960, plots within the following chromaticity coordinates:

	1	2	3	4
X	0.455	0.510	0.472	0.530
Y	0.444	0.485	0.400	0.456

c. Initial Reflectance (CIE Y): 45 minimum

d. Ensure the in-service daytime chromaticity for yellow material plots within the following coordinates after a period of 30 days:

	1	2	3	4
X	0.435	0.510	0.449	0.530
Y	0.429	0.485	0.377	0.456

4. Indentation Resistance

   Measure the hardness by a Shore Durometer, Type A2, as described in ASTM D 2240. Maintain the temperature of the Durometer, 4.4 lb. (2 kg) load and the specimen for 2 hours at 115 °F (45 ^{o}C). Apply the Durometer and 4.4 lb. (2 kg) load to the specimen. The reading must fall between 50 to 75 units, after 15 seconds.

5. Reheating

   Ensure that the compound does not break down, deteriorate, scorch, or discolor if held at application temperature of 425 °F (218 °C) for 6 hours and if reheated up to 4 times to the application temperature. Ensure that the color of white and yellow thermoplastic comply with Subsection 653.2.A.3.a and Subsection 653.2.A.3.b after prolonged heating or reheating.

6. Intermixed Glass Spheres and Reflective Composite Optics

   Ensure glass spheres meet the requirements of AASHTO M 247.

   Do not use glass spheres and /or reflective composite optics containing greater than 200 ppm total arsenic, 200 ppm total antimony, or 200 ppm total lead when tested according to US EPA Methods 3052 and 6010C, or other approved methods.

7. Flashpoint

   Ensure the thermoplastic flashpoint is not less than 500 ºF (260 ºC) as determined by ASTM D 92.

B. Drop-On Glass Spheres and Reflective Composite Optics

Ensure glass spheres meet the requirements of AASHTO M 247. Use spheres produced from an approved source listed on QPL 71. Glass spheres conforming to an alternative gradation may be used provided all other requirements of AASHTO M 247 and this specification are met. Do not use glass spheres and /or reflective composite optics containing greater than 200 ppm total arsenic, 200 ppm total antimony, or 200 ppm total lead when tested according to US EPA Methods 3052 and 6010C, or other approved methods.

C. Sealing Primer

Place the particular type of binder-sealer at the application rate as recommended in writing by the thermoplastic material manufacturer.

653.2.01 Delivery, Storage, and Handling

Use material delivered in 50 lb (22.7 kg) unit cardboard containers or bags strong enough for normal handling during shipment and on-the-job transportation without loss of material.

Ensure that each unit container is clearly marked to indicate the following:

- Color of the material
- Process batch number or similar manufacturer’s identification

- Manufacturer's name
- Address of the plant
- Date of manufacture

653.3 Construction Requirements

653.3.01 Personnel

General Provisions 101 through 150.

653.3.02 Equipment

Depending on the marking required, use hand equipment or truck-mounted application units on roadway installations.

A. Application Machine

Ensure that each application machine is equipped with the following features:

- Parts continuously mix and agitate the material.
- Truck-mounted units for lane, edge, and center lines operate at a uniform, predetermined rate of speed, both uphill and downhill, in order to produce a uniform application of striping material and capable of following straight lines and making normal curves in a true arc.
- Conveying parts between the main material reservoir and the shaping die or gun prevent accumulation and clogging.
- Parts that contact the material are easily accessible and exposable for cleaning and maintenance.
- Mixing and conveying parts, including the shaping die or gun, maintain the material at the plastic temperature with heat transfer oil or electrical element controlled heat. Do not use an external source of direct heat.
- Parts provide continuously uniform stripe dimensions.
- Applicator cleanly and squarely cuts off stripe ends and applies skip lines. Do not use pans, aprons, or similar appliances that the die overruns.
- Parts produce varying widths of traffic markings.
- Applicator is mobile and maneuverable enough to follow straight lines and make normal curves in a true arc.

B. Automatic Bead Dispenser

Apply glass spheres and/or reflective composite optics to the surface of the completed stripe using a dispenser attached to the striping machine to automatically dispense the beads/optics instantaneously upon the installed line. Synchronize the glass sphere/optics dispenser cutoff with the automatic cutoff of the thermoplastic material.

C. Special Kettles

Use special kettles for melting and heating the thermoplastic material. Use kettles equipped with automatic thermostatic control devices that provides positive temperature control and prevents overheating. Ensure that the applicator and kettles are equipped and arranged according to the requirements of the National Fire Underwriters.

D. Hand Equipment

Use hand equipment for projects with small quantities of lane lines, edge lines, and center lines, or for conditions requiring the equipment. Use hand equipment approved by the Engineer.

Ensure hand equipment can hold 150 lbs (68 kg) of molten material and is maneuverable to install crosswalks, arrows, legends, lane, edge, and center lines.

E. Auxiliary Vehicles

Supply the necessary auxiliary vehicles for the operation.

653.3.03 Preparation

For asphaltic concrete pavement, do not begin placement of thermoplastic striping until 15 calendar days after completion of the final surface course.

653.3.04 Fabrication

General Provisions 101 through 150.

653.3.05 Construction

A. General Application

Notify the Engineer prior to the placement of the thermoplastic materials. Furnish the Engineer with the manufacturer's name and batch numbers of the thermoplastic materials and glass spheres to be used. Ensure that the approved batch numbers appear on the thermoplastic materials and glass spheres packages.

Thoroughly clean pavement areas to be striped. Use hand brooms, rotary brooms, air blasts, scrapers, or other approved methods that leave the pavement surface clean and undamaged. Take care to remove all vegetation and road film from the striping area. Ensure all new Portland cement concrete pavement surfaces are mechanically wire brushed or abrasive cleaned to remove all laitance and curing compound before being striped.

Lay stripe with continuous uniform dimensions.

Apply the type of stripe at each location according to the Plans, using one of the following methods:

- Spray techniques
- Extrusion methods wherein one side of the shaping die is the pavement and the other three sides are contained by or are part of the suitable equipment to heat and control the flow of material.
- Extrusion methods using a pressurized ribbon gun to control the application of material.

1. Temperature

   Apply thermoplastic traffic stripe only when the pavement temperature in the shade is above 40 °F (4 °C).

   To ensure optimum adhesion, install the thermoplastic material in a melted state at the manufacturer's recommended temperature but not at less than 375 °F (190 °C).

2. Moisture

   Do not apply when the surface is moist. When directed by the Engineer, perform a moisture test on the Portland cement concrete pavement surface. Perform the test as follows:

   a. Place approximately 1 yd^2 ($1m^2$) of roofing felt on the pavement surface.
   b. Pour approximately 1/2 gallon (2 L) of molten thermoplastic onto the roofing felt.
   c. After 2 minutes, lift the roofing felt and inspect to see if moisture is present on the pavement surface or underside of the roofing felt.
   d. If moisture is present, do not proceed with the striping operation until the surface has dried sufficiently to be moisture free.

3. Sealing Primer

   To ensure optimum adhesion, apply a binder-sealer material before installing the thermoplastic in each of the following cases:

   - Where directed by the Engineer for sprayed thermoplastic
   - Old asphaltic concrete pavements with exposed aggregates
   - Portland cement concrete pavements

   Ensure that the binder-sealer material forms a continuous film that mechanically adheres to the pavement and dries rapidly. Use a-binder-sealer currently in use and recommended by the thermoplastic material manufacturer according to QPL 46.

Apply the binder-sealer immediately in advance of, but concurrent with, the application of the thermoplastic material. Apply in a continuous film over the pavement surface.

4. Bonding to Old Stripe

   If the old stripe is to be renewed by overlaying with new material, ensure the new material bonds to the old line without splitting or cracking.

5. Offset from Construction Joints

   Off-set longitudinal lines at least 2 in (50 mm) from construction joints of Portland cement concrete pavements.

6. Crosswalks, Stop Bars, and Symbols

   Make crosswalks, stop bars, and symbols at least 3/32 in (2.4 mm) thick at the edges and no more than 3/16 in (4.8 mm) thick at the center.

7. Thickness

   Maintain the following minimum average dry thicknesses above the surface on all types of pavement

   - 0.090 in (2.3 mm)* for lane lines
   - 0.060 in (1.5 mm)* for edge lines
   - 0.120 in (3.0 mm)* for gore area lines

   (See below for '*' reference.)

   Compute the minimums by the amount of material used each day, as follows:

(For 5 in wide stripe)	
* Average Thickness (in) =	[(lbs used) ÷ (total linear feet)] x 0.236
(For 125 mm wide stripe)	
*Average Thickness (mm) =	[(kg used) ÷ (total linear meters)] x 4.0
(For 10 in wide stripe)	
* Average Thickness (in) =	[(lbs used) ÷ (total linear feet)] x 0.118
(For 250 mm wide stripe)	
* Average Thickness (mm) =	[(kg used) ÷ (total linear meters)] x 2.0

8. Glass Spheres and Reflective Composite Optics

   a. Apply glass spheres and/or reflective composite optics to installed stripe surface above the minimum rate recommended by the thermoplastic material manufacturer to produce the required retroreflectivity value in accordance with Subsection 653.3.06.

   b. Apply the glass sphere and/or reflective composite optics top-coating with a pressure-type gun specifically designed for applying glass spheres and/or reflective composite optics that will embed at least one-half of the sphere's and optic's diameter into the thermoplastic immediately after the material has been applied to the pavement.

B. Removing Existing Stripe

Remove existing stripe according to Section 656.

Remove 100 percent of existing traffic stripe from:

- Portland cement concrete pavement where the new stripe will be placed at the same location as the existing marking
- Pavement where the new stripe will be placed at a different location from the existing markings

C. Tolerance and Appearance

No traffic stripe shall be less than the specified width and shall not exceed the specified width by more than 1/2 in (13mm). The length of the 10 ft (3 m) segment for skip stripe and the 30 ft (9 m) gap between segments may vary plus or minus 1 ft (300 mm). The alignment of the stripe shall not deviate from the intended alignment by more than 1 in (25 mm) on straight lines. On curves up to and including 1 degree (radius of 1745 m or greater), the alignment of the stripe shall not deviate from the intended alignment by more than 1 in (25 mm). On curves exceeding 1 degree (radius less than 1745 m), the alignment of the stripe shall not deviate from the intended alignment by more than 2 in (50 mm).

Stop work when deviation exceeds the above dimensions, and remove the nonconforming stripe.

D. Traffic Marking Protection

Do not allow traffic onto or permit vehicles to cross newly applied pavement markings until they are sufficiently dry. Remove and replace any portion of the pavement markings damaged by passing traffic or from any other cause, at no additional cost to the Department.

653.3.06 Quality Acceptance

A. General

For a minimum of 30 days from the time of placement, ensure the thermoplastic pavement marking material shows no signs of failure due to blistering, excessive cracking, chipping, bleeding, staining, discoloration, oil content of the pavement materials, smearing or spreading under heat, deterioration due to contact with grease deposits, oil, diesel fuel, or gasoline drippings, spilling, poor adhesion to the pavement material, vehicular damage, and normal wear. In the event that failures mentioned above occur, ensure corrective work is completed at no additional cost to the Department.

Obtain pavement marking retroreflectivity values with a 30 meter geometry retroreflectometer.

B. Initial Retroreflectivity

1. Longitudinal Lines

   Within 30 days of installation, ensure the in-place markings meet the following minimum reflectance values:

   a. Standard

	White	Yellow
Dry (ASTM E 1710)	400 mcd/lux/m^2	300mcd/lux/m^2

   b. Wet Weather

	White	Yellow
Dry (ASTM E 1710)	400 mcd/lux/m^2	300 mcd/lux/m^2
Wet recovery (ASTM E 2177)	150 mcd/lux/m^2	125 mcd/lux/m^2

   For each center line, edge line, and skip line, measure retroreflectivity 9 times for each mile; 3 times within the first 500 ft (152 m), 3 times in the middle, and 3 times within the last 500 ft (152 m). For projects less than one mile in length, measure retroreflectivity 9 times as above.

   Record all retroreflectivity measurements on the form OMR CVP 66 in SOP 39.

2. Messages, Symbols, and Transverse Lines

   At the time of installation, ensure the in-place markings when tested according to ASTM E 1710 meet the following minimum reflectance value of 275 mcd/lux/m^2.

   Perform at a minimum, one retroreflectivity measurement at one message, one symbol and one transverse line per intersection. Take one measurement per mile for locations other than intersections (i.e. school messages, railroad messages, bike symbols etc.)

C. Six Month Retroreflectivity (Longitudinal Lines)

Maintain the following minimum reflectance values for 180 days after installation:

1. Standard

	White	Yellow
Dry (ASTM E 1710)	400 mcd/lux/m^2	300 mcd/lux/m^2

2. Wet Weather

	White	Yellow
Dry (ASTM E 1710)	400 mcd/lux/m^2	300 mcd/lux/m^2
Wet recovery (ASTM E 2177)	150 mcd/lux/m^2	125 mcd/lux/m^2

Retest the in-place markings according to Subsection 653.3.06.B.1 180 days after installation to ensure these minimum retroreflectance values are maintained.

NOTE: The Contractor is responsible for retroreflectivity testing. Furnish initial test results to the Engineer within 30 days of application. Furnish 6 month test results to the Engineer within 180 days of application or prior to final acceptance, whichever comes first.

D. Thickness

1. New Striping

   Check the thicknesses on all skip lines, edge lines and center lines with an approved traffic marking thickness gage consisting of 3 dials as follows:

   For each center line, edge line, and skip line, measure thickness above the pavement 3 times for each mile; once within the first 500 ft (152 m), once in the middle, and once within the last 500 ft (152 m). For projects less than one mile in length, measure the thickness above the pavement 3 times.

   Record all thickness measurements on the form OMR CVP 66 in SOP 39.

2. Recapping Refurbishment Thermoplastic

   Place durable tape, film, or metal plate of known and uniform thickness on an area to be striped. After the striper has passed over, remove the sample and measure the thickness with calipers or a micrometer.

   For each center line, edge line, and skip line, measure thickness above the pavement 3 times for each mile; once within the first 500 ft (152 m), once in the middle, and once within the last 500 ft (152 m). For projects less than one mile in length, measure the thickness above the pavement 3 times.

   Submit results to the Engineer.

E. Corrective Work

For each mile section, if the thermoplastic traffic stripe fails to meet Plan details or Specifications or deviates from stated dimensions, correct it at no additional cost to the Department. If removal of pavement markings is necessary, perform it according to Section 656 and place it according to this Specification. No additional payment will be made for removal and replacement of unsatisfactory striping. Ensure corrective work is completed at no additional cost to the Department. Perform testing according to this Specification. Any retest due to failures will be performed at no additional cost to the Department. Furnish all test reports to the Department.

Retroreflectivity and Thickness Longitudinal Line Deficiency: A deficiency will ensue when two or more Location Average results as recorded on form OMR CVP 66 within a One-Mile Section do not meet the performance criteria herein. The entire line within this one mile section will be determined to be deficient. If the evaluated section is less than 1.0 mile, a single Location Average result not meeting the performance criteria herein will result in the entire line to be determined to be deficient.

Retroreflectivity Transverse Markings and Symbol Deficiency: A single Location Average result on the marking or symbol not meeting the performance criteria herein will result in the marking or symbol to be determined to be deficient.

653.3.07 Verification

See SOP 39

653.4 Measurement

When stripe will be paid for by the square yard (meter), the actual number of square yards (meters) painted will be measured. The space between the stripes will be included in the overall measurement.

Linear measurements may be made by electronic measuring devices attached to a vehicle.

Thermoplastic traffic stripe, complete in place and accepted, is measured as follows:

A. Solid Traffic Stripe

Stripe is measured by the linear foot (meter), linear mile (kilometer), or square yard (meter). Breaks or omissions in solid lines or stripes at street or road intersections are not measured for payment.

B. Skip Traffic Stripe

Skip stripe is measured by the gross linear mile (kilometer) as specified. The unpainted space between the painted stripes is included in the overall measurement if the Plan ratio of one to three (10 ft [3 m] segment and 30 ft [9 m] gap or other patterns as designated on the Plans) remains uninterrupted. Measurement begins and ends on a stripe.

C. Words and Symbols

Each word or symbol complete according to Plan dimensions is measured by the Unit.

653.4.01 Limits

General Provisions 101 through 150.

653.5 Payment

Payment is full compensation for the Work under this section, including:

- Cleaning and preparing surfaces
- Furnishing all materials
- Applying, curing, and protecting stripe
- Protecting traffic, including providing necessary warning signs
- Furnishing tools, machines, and other equipment necessary to complete the Item

Measurement and payment for removing pavement markings will be according to Section 656 when shown in the Proposal as a payment Item. Otherwise, removal will not be paid for separately, but will be included in the payment for other Work under this section.

Payment will be made under:

Item No. 653	Thermoplastic solid traffic stripe, __ in (mm), (color)	Per linear foot (meter)
Item No. 653	Thermoplastic solid traffic stripe, __ in (mm), (color)	Per linear mile (kilometer)
Item No. 653	Thermoplastic skip traffic stripe, __ in (mm), (color)	Per gross linear foot (meter)
Item No. 653	Thermoplastic skip traffic stripe, __ in (mm), (color)	Per gross linear mile (kilometer)
Item No. 653	Thermoplastic pavement markings, words, and symbols (color), type _____	Per each
Item No. 653	Thermoplastic traffic stripe	Per square yard (meter)
Item No. 653	Wet Weather Thermoplastic solid traffic stripe, __ in (mm), (color)	Per linear foot (meter)
Item No. 653	Wet Weather Thermoplastic solid traffic stripe, __ in (mm), (color)	Per linear mile (kilometer)
Item No. 653	Wet Weather Thermoplastic skip traffic stripe, __ in (mm), (color)	Per gross linear foot (meter)
Item No. 653	Wet Weather Thermoplastic skip traffic stripe, __ in (mm), (color)	Per gross linear mile (kilometer)

Item No. 653	Wet Weather Thermoplastic pavement markings, words, and symbols (color), type _____	Per each
Item No. 653	Wet Weather Thermoplastic traffic stripe	Per square yard (meter)

653.5.01 Adjustments

General Provisions 101 through 150.

Section 654—Raised Pavement Markers

654.1 General Description

This work includes furnishing and placing raised pavement markers according to the Plans or as directed by the Engineer. Use markers that conform to Plan shapes, dimensions, and tolerances.

654.1.01 Definitions

General Provisions 101 through 150.

654.1.02 Related References

A. Standard Specifications

Section 868—Bituminous Adhesive for Raised Pavement Markers

Section 886—Epoxy Resin Adhesives

Section 919—Raised Pavement Marker Materials

B. Referenced Documents

QPL 74

654.1.03 Submittals

General Provisions 101 through 150.

654.2 Materials

Ensure that materials meet the requirements of the following Specifications:

Material	Section
Bituminous Adhesive	868
Epoxy Resin Adhesives	886
Pavement Markers	919

654.2.01 Delivery, Storage, and Handling

General Provisions 101 through 150.

654.3 Construction Requirements

654.3.01 Personnel

General Provisions 101 through 150.

654.3.02 Equipment

Before beginning construction, clean marker replacement equipment and ensure that it is mechanically sound.

A. Containers and Stirring Devices

Clean containers and stirring devices (paddles, propellers for drills, etc.) before hand-mixing epoxy.

B. Automatic Mixing Device

1. Cleaning

   Clean the mixing head to the automatic epoxy mixing equipment after stopping work for any extended period of time. The length of down-time allowed depends on the pot life of the adhesive system being used.

2. Mixing Ratio

   Use an automatic mixing device that delivers separate components to the mixing head in a one-to-one ratio by volume.

3. Sample Valves

   Equip the lines feeding the mixing head with suitable valves to allow samples to be taken for checking the ratio of each component.

C. Bituminous Adhesive Equipment

Clean and maintain equipment for melting, stirring, and dispensing bituminous adhesive according to the bituminous adhesive manufacturer's requirements.

654.3.03 Preparation

General Provisions 101 through 150.

654.3.04 Fabrication

General Provisions 101 through 150.

654.3.05 Construction

A. Adhesive Types

Cement markers to pavement surfaces with a Type I-R Epoxy or Type I-S Epoxy (see Section 886), or with a bituminous adhesive (see Section 868). Space markers according to the Plans.

1. **Type I-R Epoxy.** Use Type I-R Epoxy when the pavement temperature is above 50 °F (10 °C), or when traffic conditions require a rapid setting system.
2. **Type I-S Epoxy.** Use Type I-S Epoxy when the pavement temperature is above 60 °F (15 °C) and traffic conditions permit a slower setting system.
3. **Bituminous Adhesive.** Use bituminous adhesive when the pavement temperature is above 40 °F (4 °C) or when traffic conditions require a rapid setting material.

B. Handling and Applying Adhesives

Obtain an epoxy adhesive furnished as two separate components. Combine and use the components as follows:

1. Immediately before use, thoroughly stir the individual components with separate paddles. Reject material permanently increasing in viscosity or showing settling of pigments, filler, or thixotropic additives that cannot be readily redispersed.
2. After stirring or agitating the two separate components, mix them in a one-to-one ratio and blend thoroughly until obtaining a uniform color without streaks.
3. At time of mixing, ensure that the temperature of both components is 60 ° to 80 °F (15 ° to 27 °C). If necessary, heat components using indirect heat to avoid locally overheating and decomposing the material. Do not heat adhesive above 120 °F (49 °C).
4. Place markers between the start of mixing the epoxy system and the termination of the pot life. The Engineer will designate the allowable pot life based on environmental factors. Never use a partially set mixed system that does not readily extrude around the perimeter of the marker when pressed to the roadway.

5. When using an approved fast-setting epoxy system, mix the separate components with a two-component type automatic mixing and extrusion apparatus, and place markers immediately.
6. Use bituminous adhesive furnished in approximately 30 lb (14 kg) cubes.
   a. Heat the cubes in an oil-jacketed melting pot.
   b. Maintain the bituminous adhesive at the manufacturer-recommended temperature during placement of the markers.
   c. Discard bituminous adhesive heated above 450 °F (232 °C).

C. Placement of Markers

1. Surface Cleaning

   Clean pavement of dirt, curing compound, grease, oil, paint, moisture, loose or unsound layers, or other material that would impair the bond between the adhesive and the roadway.
   a. Use either sand-blasting or grinding equipment to clean. Remove the dust before placing the marker.
   b. Provide cleaning equipment air lines with suitable traps to prevent oil or moisture from being redeposited on the road surface.
2. Placement Limits

   Place markers as follows:
   a. Do not place markers over joints in rigid pavement.
   b. Do not place markers when pavement temperature is below 40 °F (4 °C).
   c. When possible, wait 60 to 90 days before placing markers using epoxy adhesive on newly constructed asphaltic concrete pavements.
3. Marker Placement Using Epoxy Adhesives

   Place markers using epoxy adhesives as follows:
   a. Place enough adhesive on the cleaned pavement or the bottom of the marker to completely cover the contact area of the marker.
   b. Press the marker firmly to the pavement.
   c. Allow a slight bead of epoxy adhesive to extrude from under the marker edges.
   d. Remove adhesive on the face of the marker or adhesive that obscures the marker. Do not use thinners or solvents to clean epoxy adhesives from the markers.
4. Marker Placement Using Bituminous Adhesives

   Place markers using bituminous adhesives as follows:
   a. Place enough bituminous adhesive on the cleaned pavement or the bottom of the marker to completely cover the contact area of the marker.
   b. Press the marker firmly to the pavement.
   c. Allow a slight bead of adhesive to extrude from under the marker edges.
   d. Remove adhesive on the face of the marker or adhesive that obscures the marker.
   e. Place the marker before the bituminous adhesive cools and does not extrude around the perimeter of the marker when pressed to the roadway.

654.3.06 Quality Acceptance

Refer to QPL 74 for raised pavement markers that have met these requirements.

654.3.07 Contractor Warranty and Maintenance

General Provisions 101 through 150.

654.4 Measurement

The number of each type of installed and accepted pavement marker is counted separately for payment.

654.4.01 Limits

General Provisions 101 through 150.

654.5 Payment

Raised pavement markers will be paid for at the Unit Price for each Unit of each type. Payment is full compensation for furnishing and installing each marker.

When designated, payment will also include recessing the marker.

Payment will be made under:

Item No. 654	Raised pavement markers type_____	Per each
Item No. 654	Raised pavement markers type_____(recessed)	Per each

654.5.01 Adjustments

General Provisions 101 through 150.

Section 655—Pavement Arrow with Raised Reflectors

655.1 General Description

This work includes installing pavement arrows with raised reflectors. Mark arrows with traffic paint, thermoplastic, or preformed plastic pavement markings according to the Proposal and Plan details.

655.1.01 Definitions

General Provisions 101 through 150.

655.1.02 Related References

A. Standard Specifications

Section 652—Painting Traffic Stripe

Section 653—Thermoplastic Traffic Stripe

Section 654—Raised Pavement Markers

Section 657—Preformed Plastic Pavement Markings

Section 868—Bituminous Adhesive For Raised Pavement Markers

Section 870—Paint

Section 886—Epoxy Resin Adhesives

Section 913—Reflectorizing Materials

Section 919—Raised Pavement Marker Materials

B. Referenced Documents

General Provisions 101 through 150.

655.1.03 Submittals

General Provisions 101 through 150.

655.2 Materials

Ensure that materials conform to the following Specifications:

Material	Section
Glass Beads (Paint)	652.2
Thermoplastic Traffic Markings	653.2
Glass Spheres (Thermoplastic)	653.2.D
Preformed Plastic Pavement Markings	657
Bituminous Adhesive	868
Traffic Line Paint	870.2.02
Epoxy Adhesives, Type I	886.2.01.A
Raised Pavement Marker	919

655.2.01 Delivery, Storage, and Handling

General Provisions 101 through 150.

655.3 Construction Requirements

655.3.01 Personnel

General Provisions 101 through 150.

655.3.02 Equipment

General Provisions 101 through 150.

655.3.03 Preparation

General Provisions 101 through 150.

655.3.04 Fabrication

General Provisions 101 through 150.

655.3.05 Construction

Install the raised markers for pavement arrows according to Subsection 654.3.05.

A. Painted Arrows

Apply painted arrows according to Section 652.

B. Thermoplastic Arrows

Except as noted below, place thermoplastic according to Section 653. Do not sand blast arrows to be coated with thermoplastic.

1. Apply thermoplastic 125 mils (3.18 mm) thick.
2. Screed or level the thermoplastic.
3. Immediately embed the raised reflector in the molten thermoplastic.

C. Preformed Plastic Pavement Markings

Apply preformed plastic pavement markings according to Section 657.

655.3.06 Quality Acceptance

General Provisions 101 through 150.

655.3.07 Contractor Warranty and Maintenance

General Provisions 101 through 150.

655.4 Measurement

Each type of arrow is measured by the Unit.

655.4.01 Limits

General Provisions 101 through 150.

655.5 Payment

Each arrow will be paid for per Unit placed. Payment is full compensation for furnishing materials, cleaning, and installing the completed arrow with raised reflectors.

Payment will be made under:

Item No. 655	Pavement arrow (painted) with raised reflectors	Per each
Item No. 655	Pavement arrow (thermoplastic) with raised reflectors	Per each
Item No. 655	Pavement arrow (preformed plastic) with raised reflectors	Per each

655.5.01 Adjustments

General Provisions 101 through 150.

Section 656—Removal of Pavement Markings

656.1 General Description

This work includes removing existing traffic stripes or markings according to Plans or as designated by the Engineer.

656.1.01 Definitions

General Provisions 101 through 150.

656.1.02 Related References

A. Standard Specifications

Section 107—Legal Regulations and Responsibility to the Public

Section 150—Traffic Control

Section 804—Abrasives for Blast Cleaning

B. Referenced Documents

General Provisions 101 through 150.

656.1.03 Submittals

General Provisions 101 through 150.

656.2 Materials

General Provisions 101 through 150.

656.2.01 Delivery, Storage, and Handling

General Provisions 101 through 150.

656.3 Construction Requirements

656.3.01 Personnel

General Provisions 101 through 150.

656.3.02 Equipment

General Provisions 101 through 150.

656.3.03 Preparation

General Provisions 101 through 150.

656.3.04 Fabrication

General Provisions 101 through 150.

656.3.05 Construction

Remove pavement markings before changing the traffic pattern. This Specification does not relieve the Contractor of the responsibilities in Section 150 or Subsection 107.07.

Utilize blasting, such as sand blasting or water blasting, grinding, or other approved methods to completely remove pavement markings without materially damaging the pavement surface or texture. Repair (at the Contractor's expense) damage to the pavement or other surface from removing the markings. Use repair methods acceptable to the Engineer.

A. Blast Cleaning

Do not allow sand and other debris to accumulate and interfere with drainage or create a traffic hazard.

1. When blast cleaning within 10 ft (3 m) of a lane occupied by public traffic, immediately remove residue and dust when the sand hits the pavement surface.
2. Use a vacuum attachment operating simultaneously with blast cleaning, or use other methods approved by the Engineer.
3. Ensure that sand for blast cleaning conforms to Section 804.

656.3.06 Quality Acceptance

General Provisions 101 through 150.

656.3.07 Contractor Warranty and Maintenance

General Provisions 101 through 150.

656.4 Measurement

Removal of existing pavement markings is measured by the linear foot (meter), linear mile (kilometer), gross linear foot (meter), gross linear mile (kilometer), or square yard (meter) of the designated width and the type of stripe.

Where removal of traffic markings will be paid for by the square yard (meter), the actual number of square yards (meters) removed will be paid for. The space between the stripes or letters will be included in the overall measurement.

Removal of words in existing traffic markings is measured per each word removed.

656.4.01 Limits

General Provisions 101 through 150.

656.5 Payment

When shown as a Pay Item on the Plans, payment for removing pavement markings will be at the Contract Unit Price for the Unit. Payment is full compensation for furnishing materials, labor, equipment, and traffic control necessary to perform the work.

Payment will be made under:

Item No. 656	Removing existing solid traffic stripe __ in (mm) wide (type)	Per linear foot (meter)
Item No. 656	Removing existing skip traffic stripe __ in (mm) wide (type)	Per gross linear foot (meter)
Item No. 656	Removing existing solid traffic stripe __ in (mm) wide (type)	Per linear mile (kilometer)
Item No. 656	Removing existing skip traffic stripe __ in (mm) wide (type)	Per gross linear foot (meter)
Item No. 656	Removing existing traffic markings (type)	Per square yard (meter)
Item No. 656	Removing existing traffic markings—words	Per each

656.5.01 Adjustments

General Provisions 101 through 150.

Section 657— Preformed Plastic Pavement Markings

657.1 General Description

This work includes placing plastic pavement markings or legends according to the Plans and Specifications or as otherwise directed.

657.1.01 Definitions

General Provisions 101 through 150.

657.1.02 Related References

A. Standard Specifications

General Provisions 101 through 150.

B. Referenced Documents

ASTM D 638

ASTM D 4061

ASTM D 4505

ASTM D 4592

ASTM E 274

ASTM E 303

ASTM E 1710

ASTM E 2177

US EPA Method 3052

US EPA Method 6010C

Manual on Uniform Traffic Control Devices for Streets and Highways

Federal Test Standard 141, Method 6192

QPL 74

SOP 39

657.1.03 Submittals

Transfer to the Department manufacturer warranties or guarantees for heat-applied and wet reflective preformed plastic marking materials. Ensure that warranties or guarantees state that they are subject to transfer.

657.2 Materials

Select one of the following types of preformed marking material according to the Plans and Proposal:

- Type TR – Temporary Removable Plastic Marking
- Type TN – Temporary Non-Removable Plastic Marking
- Type PA – Permanent Plastic Marking
- Type PB – Permanent Patterned Plastic Marking
- Type PB-WR – Permanent Patterned Wet Reflective Plastic Markings

For a list of sources, see QPL-74.

A. General Requirements for Preformed Pavement Markings

1. Shapes and Sizes

   Use markings that conform to the shapes and sizes outlined in the Manual on Uniform Traffic Control Devices for Streets and Highways.

2. Pigmentation

   Use white or yellow pigmented plastic according to each marking type.

3. Adhesion

   Use markings that can be affixed to bituminous or Portland cement concrete pavements by pressure-sensitive precoated adhesive or a liquid contact cement.

   Ensure that marking adhesive adheres to the roadway under normal climactic and traffic conditions.

4. Conformability

   Use markings that will mold to pavement contours, breaks, faults, and the like, by normal action of traffic at normal pavement temperatures.

5. NTPEP Evaluation

   Use markings evaluated by the National Transportation Product Evaluation Program (NTPEP).

6. Glass Spheres and/or Reflective Composite Optics

   Use markings with a layer of glass spheres and/or reflective composite optics bonded to the surface according to the marking type. Type PB and PB-WR contain glass beads and/or reflective composite optics. Types TR, TN, and PA contain only glass beads.

   Do not use glass spheres and /or reflective composite optics containing greater than 200 ppm total arsenic, 200 ppm total antimony, or 200 ppm total lead when tested according to US EPA Methods 3052 and 6010C, or other approved methods.

   Use glass spheres with less than 2% by weight showing any milkiness, scoring or scratching. Use clear, transparent spheres that are free from air inclusions and conform to the following:

	Glass Spheres
Refractive Index, (tested by oil immersion)	1.50 minimum
Uniform Distribution of Spheres	0.75 minimum

7. Reflective Intensity (Types TR, TN and PA)

   Determine reflective intensity in accordance with ASTM D4061 or E1710.

   Ensure that marking types TR, TN, and PA use white or yellow film with the initial reflective intensity indicated in the table below, when measured at the angles shown.

	White	Yellow
Observation Angle	1.05°	1.05°
Entrance Angle	88.8°	88.8°
Reflective Intensity – Millicandelas per square meter per lux	500	300

8. Composition

   Use markings made of high-quality polymeric materials and pigments. Ensure types TR and PA contain the following composition of materials:

Material	Min% By Weight
Resins and Plasticizers	20
Pigments	30
Graded Glass Spheres	33

B. Requirements for Temporary Markings (Types TR and TN)

1. Temporary Removable Markings (Type TR)

   Use temporary, removable markings that meet the following requirements:

   a. Removability

      Ensure the marking material can be removed from asphaltic and Portland cement as follows:

      - Lifted intact or in large pieces.
      - Lifted either manually or with a roll-up device.
      - Lifted at temperatures above 40 °F (5 °C) without using heat, solvents, sand blasting, or grinding.

      Ensure the pavement shows no objectionable staining or damage after removing the marking.

   b. Elongation and Tensile Strength

      Provide temporary markings with the following elongation and tensile strength when tested according to ASTM D 638:

Elongation	50% maximum
Tensile Strength	40 lbs/in² (275 kPa) minimum

      Test as follows:

      1) Cut a 1 in by 6 in (25 mm by 150 mm) specimen.
      2) Test at a temperature between 70 °F and 80 °F (21 °C and 27 °C).
      3) Test at a jaw speed of 12 in/min (300 m/min).

   c. Adhesion

      Ensure that temporary marking material meets the adhesion requirements of ASTM D4592.

   d. Glass Sphere Retention

      Confirm the glass Sphere retention quality of marking material in both of the following ways:

      1) Laboratory Test
         - Take a 2 in by 6 in (50 mm by 150 mm) sample.

- Bend the sample over a ½ in (13 mm) diameter mandrel, leaving the 2 in (50 m) side perpendicular to the mandrel axis.
- Ensure that the area on the mandrel shows no more than 10 percent of the beads entrapped by the binder less than 40 percent.

2) Field test

- Ensure the Spheres cannot be easily removed by scratching the material firmly with the thumbnail.

e. Skid Resistance

Ensure that the material surface provides a 35 BPN minimum skid resistance value when tested according to ASTM E 303.

f. Thickness

Ensure that the removable marking material is at least 20 mils (0.50 mm) thick not including the backing adhesive.

2. Temporary Non-Removable markings (Type TN)

This type of pavement marking may use a conformable metallic foil backing with a precoated pressure-sensitive adhesive. Skid Resistance

a. Ensure the retroreflective pliant polymer surface provides a skid resistance value of at least 35 BPN. Test according to ASTM E 303.

b. Elongation and Tensile Strength

No test for elongation and tensile strength is required for type TN marking.

c. Glass Sphere Retention

Refer to Subsection 657.2.B.1.d, “Glass Sphere Retention”.

d. Thickness

Ensure the nonremovable marking material is at least 20 mils (0.50 mm) not including the adhesive backing.

C. Requirements for Permanent Markings (Types PA, PB and PB-WR)

1. Permanent Plastic Marking (Type PA)

Provide permanent plastic markings with these features:

a. Adhesive and Backing

Use markings supplied with the following:

- A precoated adhesive
- An easily removable backing to protect the adhesive
- An adhesive backing that allows repositioning of the marking on the surface before permanently sticking with greater pressure

In addition, supply rolls of lane lines with a precoated adhesive but without the protective backing material.

b. Pigments

1) White

- Use white marking material meeting the initial color requirements of ASTM D4505.

2) Yellow

- Use yellow marking material meeting the initial color requirements of ASTM D4505.

3) Appearance

Ensure that each marking meets the following appearance standards:

- Markings are extruded to a uniform thickness.
- Edges are smoothly cut and true.
- Glass spheres are retained on all sides by the plastic base material.

- The wearing surface is free of indentations, displaced spheres, or other irregularities that retain dirt, dust, or other foreign materials.

c. Thickness

Ensure the permanent material is at least 60 mils (1.52 mm) thick, without the pre-coated adhesive.

d. Glass Sphere Retention

Confirm that the surface glass spheres are strongly bonded and are not easily removed by traffic. Test them as follows:

1) Use a Taber Abraser with an H-18 wheel and 125 gram load.
2) Inspect the sample at 200 cycles under the microscope to observe the extent and type of bead failure.
3) Ensure that no more than 15 percent of the spheres have popped-out.
4) Verify that the predominant mode of failure is “wear-down” of the spheres.

e. Tensile Strength and Elongation

Ensure that the permanent markings have the following elongation and tensile strength when tested according to ASTM D 638:

Elongation	50% maximum
Tensile Strength	150 psi (1035 kPa) minimum

Test as follows:

NOTE: Run this test 3 times and base the result on an average of the 3 tests.

1) Cut 3 specimens, 1 in by 6 in (25 mm by 150 mm) each.
2) Place 1 in² (625 mm²) of carborundum extra-coarse emery cloth or its equivalent at each end of the test specimens to prevent the adhesive from sticking to test equipment.
3) Test at a temperature between 70 ° and 80 °F (21° and 27 °C).
4) Test at a jaw speed of 10 to 12 in/min (250 mm to 300 mm/min).

f. Skid Resistance

Test the plastic surface to verify that it provides a skid resistance value of at least 45 BPN. Test according to ASTM E 303.

g. Adhesive

Ensure permanent markings meet the adhesion requirements of ASTM D4505.

2. Permanent Patterned Plastic Marking (Type PB)

Use patterned plastic markings with these features:

a. Patterned Surface

Ensure that the patterned surface has the following characteristics:

- A reflective layer of glass spheres and/or reflective composite optics bonded to a durable polyurethane topcoat.
- The raised area comprises approximately 40% ± 15% of the total marking face.
- The surface presents a near vertical face (β angle of 0° to 60°) to traffic from any direction.
- The Office of Materials approves the pattern configuration.
- The channels between raised areas are free of exposed beads or particles.

b. Adhesive and Backing

Refer to Subsection 657.2.C.1.a, “Adhesive and Backing”.

c. Pigments

Refer to Subsection 657.2.C.1.b, “Pigments”.

d. Glass Spheres and Reflective Composite Optics

Ensure that the top layer of glass spheres and/or reflective composite optics are bonded to a durable polyurethane surface.

e. Thickness

Ensure the permanent material is at least 60 mils (1.52 mm) thick at the thickest portion of the patterned cross-section, and at least 20 mils (0.508 mm) at the thinnest portion of the cross-section.

f. Tensile Strength and Elongation

Refer to Subsection 657.2.C.1.e, “Tensile Strength and Elongation”.

g. Skid Resistance

Refer to Subsection 657.2.C.1.f, “Skid Resistance”.

h. Dry Reflective Intensity

Determine reflective intensity in accordance with ASTM D 4061 or E1710. Initial minimum dry reflective values are as follows:

	White	**Yellow**
Observation Angle	1.05^{o}	1.05^{o}
	White	**Yellow**
Entrance Angle	88.8^{o}	88.8^{o}
Reflective Intensity – Millicandelas per square meter per lux	600	400

3. Permanent Patterned Wet Reflective Plastic Marking (Type PB-WR)

Use patterned plastic markings with these features:

a. Patterned Surface

Ensure that the patterned surface has the following characteristics:

- A reflective layer of glass spheres and/or reflective composite optics bonded to a durable polyurethane topcoat.
- The raised area comprises approximately 40% ± 15% of the total marking face.
- The surface presents a near vertical face (β angle of 0° to 60°) to traffic from any direction.
- The Office of Materials approves the pattern configuration.
- The channels between raised areas are free of exposed beads or particles.

b. Adhesive and Backing

Refer to Subsection 657.2.C.1.a, “Adhesive and Backing” .

c. Pigments

Refer to Subsection 657.2.C.1.b, “Pigments” .

d. Glass Spheres Beads and Reflective Composite Optics

Ensure that the top layer of glass spheres and/or reflective composite optics are bonded to a durable polyurethane surface.

e. Thickness

Ensure the permanent material is at least 60 mils (1.52 mm) thick at the thickest portion of the patterned cross-section, and at least 20 mils (0.508 mm) at the thinnest portion of the cross-section.

f. Tensile Strength and Elongation

Refer to Subsection 657.2.C.1.e, “Tensile Strength and Elongation”.

g. Skid Resistance

Refer to Subsection 657.2.C.1.f, “Skid Resistance”.

h. Dry Reflective Intensity

Determine reflective intensity in accordance with ASTM D 4061 or E1710. Initial minimum dry reflective values are as follows:

	White	Yellow
Observation Angle	1.05°	1.05°
Entrance Angle	88.8°	88.8°
Reflective Intensity – Millicandelas per square meter per lux	600	400

i. Wet Reflective Intensity

Determine wet reflective intensity in accordance with ASTM E2177.

Ensure that markings meet the following initial minimum wet retroreflective intensity.

	White	Yellow
Divergence Angle	1.05°	1.05°
Incidence Angle	88.8°	88.8°
Reflective Intensity --Millicandelas per square meter per lux	250	200

657.3 Construction Requirements

General Provisions 101 through 150.

657.3.01 Personnel

Send a factory-trained representative from the material manufacturer to the jobsite at the start of each project.

657.3.02 Equipment

General Provisions 101 through 150.

657.3.03 Preparation

General Provisions 101 through 150.

657.3.04 Fabrication

General Provisions 101 through 150.

657.3.05 Construction

Remove existing pavement markings according to Subsection 653.3.05.B, “Removing Existing Stripe.”

A. Pre-Conditions for Applying Markings (Types PB and PB-WR)

1. Meet the following conditions before applying markings onto new asphaltic pavements:
   - The ambient temperature is 40 °F (4 °C) and rising.
   - New asphaltic pavement temperature is at least 120 °F (49 °C).
   - The plastic can be applied to new asphaltic pavement immediately before the new surface is rolled for the final time.
   - Conventional steel rollers and water used with them do not impede the plastic’s application.
2. Meet the following conditions before applying markings onto all pavements:
   - The ambient temperature is 40 °F (4 °C) and rising.
   - The pavement temperature is at least 40 °F (4 °C) and rising.
   - The previous night temperature did not fall below 40 °F (4 °C).
   - No significant rainfall occurred 24 hours prior to the plastic’s application.

B. Pre-Conditions for Applying Markings (Types TR, TN, and PA)

1. Meet the following conditions before applying markings onto new asphaltic pavements:
   - The ambient temperature is 60 °F (15 °C) and rising.
   - New asphaltic pavement temperature is at least 120 °F (49 °C).
   - The plastic can be applied to new asphaltic pavement immediately before the new surface is rolled for the final time.
   - Conventional steel rollers and water used with them do not impede the plastic's application.
2. Meet the following conditions before applying markings onto all pavements:
   - The ambient temperature is 60 °F (15 °C) and rising.
   - The pavement temperature is at least 70 °F (21 °C) and rising.
   - The previous night temperature did not fall below 40 °F (4 °C).
   - No significant rainfall occurred 24 hours prior to the plastic's application.

C. Remove Existing Stripe

Remove at least 90% of existing traffic stripe under either of the following conditions:

- On Portland cement concrete pavement where the new stripe is to be placed at the same location as the existing marking
- On all pavements where the new stripe is to be placed at a location different from the existing marking

D. Applying Markings

Apply markings as follows:

1. Thoroughly clean the pavement. Clean with compressed air, hand brooms, rotary brooms, scrapers, or other approved methods which leave the pavement thoroughly clean and undamaged. Remove all vegetation and road film from the area to be striped. Mechanically wire brush or abrasive blast clean all new Portland cement concrete pavement surfaces to remove all laitance and curing compound from the area to be striped.
2. Apply an adhesive activator according to the manufacturer's recommendations, when required.
3. Position markings according to the Plans.
4. Press positioned markings firmly onto the pavement.
5. Offset longitudinal lines at least 2 in (50 mm) from construction joints of Portland cement concrete pavements.

E. Tolerances and Appearance

1. Cut off all stripe ends squarely and cleanly.
2. The length of the 10 ft (3 m) segment for skip stripe and the 30 ft (9 m) gap between segments may vary plus or minus 1in (25 mm). Do not allow the alignment of skip stripe to deviate from the intended alignment by more than 0.5 in (13 mm). Do not allow the alignment of edge stripe to deviate from the intended alignment by more than 0.5 in (13 mm) on tangents and on curves with a radius up to and including one degree. Do not allow the alignment of edge stripe to deviate from the intended alignment by more than 1 in (25 mm) on curves exceeding one degree.
3. Stop work when deviation exceeds the above dimensions, and remove the nonconforming stripe.

657.3.06 Quality Acceptance

A. General

Segments of preformed plastic traffic stripe that have been placed according to the Plans and Specifications may be accepted 30 days after the required work is complete in that segment. If Preformed Plastic Traffic Stripe fails to meet Plan details or Specifications or deviates from stated dimensions, correct it at no additional cost to the Department. If removal of pavement markings is necessary, perform it according to Section 656 and replace it according to this Specification. No additional payment will be made for removal and replacement of unsatisfactory striping.

Obtain pavement marking retroreflectivity values with a 30 meter geometry retroreflectometer.

B. Initial Retroreflectivity

1. Longitudinal Lines

   Within 30 days of installation, ensure the in place markings meet the following minimum reflectance values:

   a. Type PB

	White	Yellow
Dry (ASTM E 1710)	600 mcd/lux/m^2	400 mcd/lux/m^2

   b. Type PB-WR

	White	Yellow
Dry (ASTM E 1710)	600 mcd/lux/m^2	400 mcd/lux/m^2
Wet recovery (ASTM E 2177)	250 mcd/lux/m^2	200 mcd/lux/m^2

   For each center line, edge line, and skip line, measure retroreflectivity 9 times for each mile; 3 times within the first 500 ft (152 m), 3 times in the middle, and 3 times within the last 500 ft (152 m). For projects less than one mile in length, measure retroreflectivity 9 times as above.

   Record all retroreflectivity measurements on the form OMR CVP 66 in SOP 39.

2. Messages, Symbols, and Transverse Lines

   Within 30 days of installation, ensure both Type PB and Type PB-WR in-place markings when tested according to ASTM E 1710 meet the following minimum reflectance value of 600 mcd/lux/m^2.

   Perform at a minimum, one retroreflectivety measurement at one message, one symbol and one transverse line per intersection. Take one measurement per mile for locations other than intersections (i.e. school messages, railroad messages, bike symbols etc.)

C. Six Month Retroreflectivity (Longitudinal Lines)

Maintain the following minimum reflectance values for 180 days after installation:

1. Type PB

	White	Yellow
Dry (ASTM E 1710)	600 mcd/lux/m^2	400 mcd/lux/m^2

2. Type PB-WR

	White	Yellow
Dry (ASTM E 1710)	600 mcd/lux/m^2	400 mcd/lux/m^2
Wet recovery (ASTM E 2177)	250 mcd/lux/m^2	200 mcd/lux/m^2

Retest the in-place markings according to Subsection 657.3.06.B.1 180 days after installation to ensure these minimum retroreflectance values are maintained.

NOTE: The Contractor is responsible for retroreflectivity testing. Furnish initial test results to the Engineer within 30 days of application. Furnish 6 month test results to the Engineer within 180 days of application or prior to final acceptance, whichever comes first.

D. Corrective Work

For each mile section, if preformed plastic pavement marking traffic stripe fails to meet Plan details or Specifications or deviates from stated dimensions, correct it at no additional cost to the Department. If removal of pavement markings is necessary, perform it according to Section 656 and place it according to this Specification. No additional payment will be

made for removal and replacement of unsatisfactory striping. Ensure corrective work is completed at no additional cost to the Department. Perform testing according to this Specification. Any retest due to failures will be performed at no additional cost to the Department. Furnish all test reports to the Department.

Retroreflectivity Longitudinal Line Deficiency: A deficiency will ensure when two or more Location Average results as recorded on form OMR CVP 66 within a One-Mile Section do not meet the performance criteria herein. The entire line within this one mile section will be determined to be deficient. If the evaluated section is less than 1.0 mile, a single Location Average result not meeting the performance criteria herein will result in the entire line to be determined to be deficient.

Retroreflectivity Transverse Markings and Symbol Deficiency: A single Location Average result on the marking or symbol not meeting the performance criteria herein will result in the marking or symbol to be determined to be deficient.

657.3.07 Contractor Warranty and Maintenance

A. Warranties

Transfer all warranties or guarantees normally furnished by the manufacturer to the Department. Include a provision that warranties are subject to transfer. Warrant Type PB and Type PB-WR Plastic Markings to adhere to the pavement and to provide a minimum (ASTM E 1710) dry coefficient of retroreflection of 100 mcd/lux/m^2 when measured using a 30 meter geometry retroreflectometer for a period of at least 6 years for longitudinal markings and at least 2 years for intersection markings and symbols under normal traffic conditions.

B. Maintenance

Use the following according to manufacturer's instructions to ensure effective marking performance:

- Solvents or adhesives
- Appropriate equipment
- Recommendations for application

657.4 Measurement

Preformed plastic pavement markings complete in place and accepted are measured as follows:

A. Solid Traffic Stripe

Solid stripe is measured by the linear foot (meter) or linear mile (kilometer) as specified. Breaks or omissions in solid lines and stripes at street or road intersections are not measured for payment.

B. Skip Traffic Stripe

Skip stripe is measured by the gross linear foot (meter) or gross linear mile (kilometer) as specified. The unpainted spaces between the stripes are included in the overall measurement, if the Plan ratio is not interrupted. Measurement begins and ends on a stripe.

C. Payment by Square Yard (Meter)

When preformed pavement markings are paid for by the square yard (meter), the number of square yards (meters) covered is measured. The space between the markings is included in the overall measurement. The color, width, and type are according to the Plans.

D. Preformed Plastic Word or Symbol

Each preformed plastic word or symbol, complete according to Plan dimensions, is measured by the unit. The code for each word or symbol is stated in the Plans.

E. Removing Existing Pavement Markings

Measurement and payment for removing pavement markings will be according to Section 656 when shown in the Proposal as a payment Item. Otherwise, removal will not be paid for separately, but will be included in the payment for other Work under this Section.

657.4.01 Limits

General Provisions 101 through 150.

657.5 Payment

Payment in each case is full compensation for applying markings, including adhesives, cleaning, application, and traffic control necessary to complete the Item.

Payment will be made under:

Item No. 657.	Preformed plastic solid pavement markings_____ in (mm), (color), (type)	Per linear foot (meter)
Item No. 657.	Preformed plastic solid pavement markings_____ in (mm), (color), (type)	Per linear mile (kilometer)
Item No. 657.	Preformed plastic skip pavement markings_____ in (mm), (color), (type)	Per gross linear foot (meter)
Item No. 657.	Preformed plastic skip pavement markings_____ in (mm), (color), (type)	Per gross linear mile (kilometer)
Item No. 657.	Preformed plastic pavement markings	Per square yard (meter)
Item No. 657.	Preformed plastic pavement markings, words or symbols (color), (type)	Per each
Item No. 657.	Wet reflective preformed solid pavement markings_____ in (mm), (color), (type)	Per linear foot (meter)
Item No. 657.	Wet reflective preformed solid pavement markings_____ in (mm), (color), (type)	Per linear mile (kilometer)
Item No. 657.	Wet reflective preformed skip pavement markings_____ in (mm), (color), (type)	Per gross linear foot (meter)
Item No. 657.	Wet reflective preformed skip pavement markings_____ in (mm), (color), (type)	Per gross linear mile (kilometer)
Item No. 657.	Wet reflective preformed pavement markings	Per square yard (meter)
Item No. 657.	Wet preformed pavement markings, words or symbols (color), (type)	Per each

657.5.01 Adjustments

General Provisions 101 through 150.

Section 658—Polyurea Traffic Stripe

658.1 General Description

This work includes furnishing and applying reflectorized standard and wet weather polyurea traffic stripe according to the Plans and these Specifications.

This Item also includes applying words and symbols according to Plan details, Specifications, and the current Manual on Uniform Traffic Control Devices.

658.1.01 Definitions

Painted Stripes: Solid or broken (skip) lines. The location and color are designated on the Plans.

Skip Traffic Stripes: Painted segments between unpainted gaps on a designated sequence with a ratio of 1:3 [10 ft (3 m) segment and 30 ft (9 m) gap] as specified on the Plans. The location and color are designated on the Plans.

658.1.02 Related References

A. Standard Specifications

General Provisions 101 through 150.

Section 656—Removal of Pavement Markings

B. Referenced Documents

QPL 46

QPL 71

AASHTO M 247

ACI Method 503

ASTM C 4060

ASTM D 711

ASTM D 1155

ASTM D 1213

ASTM D 4061

ASTM D 6359

ASTM E 303

ASTM E 1710

ASTM E 2177

ASTM G 154

ASTM G 53-77

Federal Standard No. 595A-17778

SOP 39

US EPA Method 3052

US EPA Method 6010C

658.2 Materials

A. General Requirements

- Use polyurea material that has been evaluated (2 year field evaluation) by the National Transportation Product Evaluation Panel (NTPEP) test facility or other approved test facility.
- Use polyurea material produced from an approved source listed on QPL 46.
- Use a polyurea composition that is specifically formulated for use as a durable pavement marking material and for application at elevated temperatures not exceeding 170 ºF (77 ºC).
- Ensure the liquid markings consist of a two-component (Part A and Part B), 100% solids polyurea film formulated and designed to provide a simple volumetric mixing ratio as recommended by the manufacturer.
- Use white or yellow films for the markings. Ensure that these films are manufactured without the use of lead chromate pigments or other similar, lead-containing chemicals.
- Ensure that the white polyurea contains not less than 13% by weight rutile titanium dioxide pigment to insure adequate opacity, hiding power,and reflective properties.

B. Glass Spheres and Reflective Composite Optics

Use glass spheres and/or reflective composite optics for the reflective media system that ensures the polyurea pavement markings meet the reflectance performance requirements in Subsection 658.3.04. Do not use beads and/or optics containing greater then 200 ppm total arsenic, 200 ppm total antimony, or 200 ppm total lead when tested according to the most recent US EPA Methods 3052 and 6010, or other approved methods.

Ensure glass spheres meet the requirements of AASHTO M 247. Use glass spheres produced from an approved source listed on QPL 71. Glass spheres conforming to an alternative gradation may be used provided all other requirements of AASHTO M 247 and this specification are met. Obtain approval from the Office of Materials to use alternate gradations.

C. Finished Product Requirements:

1. Composition

   Ensure that the retroreflective pavement markings consist of a mixture of high-quality resins, curing agent and pigments, with a reflective layer bonded to the top surface consisting of glass spheres and/or reflective composite optics.

2. Color

   Meet these color requirements:

   - White markings are pure white and free from dirt or tint.
   - Yellow markings are “Federal Yellow” in color.
   - The material does not change its color and brightness characteristics after prolonged exposure to sunlight.

3. Skid Resistance

   Ensure the surface of the retroreflective marking provides an initial average skid resistance value of 45 BPN when tested according to ASTM E303.

4. Color and Weathering Resistance

   Ensure that the mixed polyurea compound, both white and yellow, when applied to 3 in (75 mm) x 6in (150 mm) aluminum panels at 15 ± 1 mils (0.381 mm ± 0.025 mm)wet thickness without glass beads and exposed in a Q.U.V. Environmental Testing Chamber, as described in ASTM G-53-77, conforms to the following minimum requirements:

   - The color of the white polyurea compound is not darker than Federal Standard No. 595A-17778.
   - The color of the yellow polyurea compound meets the requirements of the “Federal Yellow” color chart.

5. Drying Time (Laboratory)

   When tested in accordance with ASTM D-711 the polyurea marking material shall reach a no-pick-up condition in 10 minutes or less. Perform this test with AASHTO M247 Type 1 beads applied at a rate of 0.099 pounds per square foot (0.483 kg/m^2). Ensure that the drying time does not increase substantially with decreasing temperature.

6. Drying Time (Field)

   When installed at 77 ºF (25 ºC), at a thickness of 25± 2 mils (0.635 mm ± 0.051 mm) above the surface of the pavement on open graded asphalt concrete friction coureses and 20± 2 mils (0.508 mm ± 0.051 mm) on all other pavement types, and reflectorized with glass spheres and/or reflective composite optics, ensure that the polyurea markings reach a no-track condition in less than 10 minutes. Dry to “no-tracking” will be considered as the condition where no visual deposition of the polyurea marking to the pavement surface is observed when viewed from a distance of 50 feet (15 m), after a traveling vehicle’s tires have passed over the marking.

7. Abrasion Resistance

   Ensure that the wear index of the polyurea compound does not exceed 0.00026 lbs (120 mg) when tested in accordance with ASTM C4060 using a CS-17 wheel and under a load of 2.2 lbs (1000 g) for 1000 cycles.

8. Adhesion to Concrete

   Ensure that the polyurea pavement marking materials, when tested according to ACI Method 503, have such a high degree of adhesion to the specified concrete surface that there is a 100% concrete failure in the performance of this test. Condition the prepared specimens at room temperature 75 º ± 2 ºF (24 ºC) for a minimum of 24 hours and maximum of 72 hours prior to the performance of this test.

9. Adhesion to Asphalt

   Ensure that the polyurea pavement marking materials, when tested according to ACI Method 503, have such a high degree of adhesion to the specified asphalt surface that there is a 100% asphalt failure in the performance of this test. Condition the prepared specimens at room temperature 75 º ± 2 ºF (24 ºC) for a minimum of 24 hours and maximum of 72 hours prior to the performance of this test.

658.3 Construction Requirements

658.3.01 Equipment

A. Traveling Traffic Stripe Painter

To apply the traffic marking material, use a mobile, truck mounted and self contained pavement marking machine, specifically designed to apply two-component liquid materials, and glass beads, in a continuous and skip-line pattern.

Apply the two-component liquid materials through airless impingement mixing guns. The guns must accommodate a plural component material system at the manufacturer's recommended volumetric mixing ratio. The guns must have the capacity to deliver materials from approximately 1.5 gal (5.7 L) to 3 gal (11.4 L) per minute to compensate for a typical range of application speeds of 3 mph (5 km/h) to 6 mph (10 km/h). Ensure that the machine travels at a uniform rate of speed both uphill and downhill.

Select the necessary accessories such as spray tip, mix chamber or static tube, and rod diameter to ensure proper mixing.

Ensure that the machine meets the following:

- The machine is capable of applying three separate stripes, either solid or skip, in any specified pattern by utilizing three adjacent spray nozzles at the same time.
- Each nozzle is equipped with satisfactory cutoff valves that will apply skip lines automatically.
- The application equipment is maneuverable to the extent that straight lines can be followed and normal curves can be made in a true arc.
- The truck-mounted unit is provided with accessories to allow for the marking of symbols and legends.
- The mobile applicator provides individual material reservoirs for the storage of Part A and Part B of the resin composition.
- The applicator is equipped with heating equipment of sufficient capacity to maintain the individual resin components at the manufacturer's recommended temperature for spray application.
- The applicator is equipped with separate temperature controls for each component.
- The applicator is equipped with glass spheres dispensing equipment and capable of applying the glass spheres at a uniform rate.
- The application equipment is equipped with metering devices or pressure gauges on the proportioning pumps as well as stroke counters to monitor volumetric usage. Ensure that the metering devices or pressure gauges and stroke counters are visible.
- The applicator is equipped with all the necessary spray equipment, mixers, compressors, and other appurtenances to allow for the placement of reflectorized pavement markings in a simultaneous sequence of operations.

B. Cleaning Equipment

Use brushes, brooms, scrapers, grinders, high-pressure water jets, or air blasters to remove dirt, dust, grease, oil, and other foreign matter from painting surfaces without damaging the underlying pavement.

658.3.02 Preparation

For asphaltic concrete pavement, do not begin placement of polyurea pavement markings until 30 calendar days after completion of the final surface course.

Notify the Engineer prior to the placement of the polyurea materials. Furnish the Engineer with the manufacturer's name and batch numbers of the polyurea materials and glass spheres to be used. Ensure that the approved batch numbers appear on the polyurea materials and glass spheres packages.

Before painting, thoroughly clean pavement surfaces of dust, dirt, grease, oil, and all other foreign matter.

Remove concrete curing compounds on new Portland cement concrete surfaces and existing pavement markings on both concrete and asphalt surfaces.

658.3.03 Construction

A. Atmospheric Conditions

Apply pavement markings only during conditions of dry weather and subsequently dry pavement surfaces. Ensure that the pavement surface temperature and the ambient temperature at the time of installation are both greater than 40 ºF (4 ºC) and that the relative humidity is not greater than 85%.

B. Alignment

Ensure that the traffic stripe is the specified length, width, and placement. On sections where no previously applied markings are present, ensure accurate stripe location by establishing control points at spaced intervals. The Engineer will approve control points.

C. Application

Apply the pavement markings as follows:

1. Apply the liquid marking material by spray method and according to the manufacturer's installation instructions.
2. Ensure marking configurations are in accordance with the "Manual on Uniform Traffic Control Devices."
3. Place the reflectorized pavement markings only on properly prepared surfaces and at the widths and patterns designated on the Plans. Do not begin marking operations until applicable surface preparation work is completed and approved by the Engineer.
4. Air-blast the surface first, to remove any dirt and residues from the pavement. Then apply the pavement markings as a continuous operation.
5. Heat Component A and Component B to the manufacturer's recommended temperatures.
6. Ensure that mixing of the two components occurs in a static tube or impingement chamber prior to reaching the application spray nozzle.
7. Spray the mixed resin onto the pavement at a rate to obtain a minimum uniform dry thickness of 25 mils ± 2 mils (0.635 mm ± 0.051 mm) above the surface of the pavement on open graded asphalt concrete friction coureses and 20 mils ± 2 mils (0.508 mm ± 0.051 mm) above the surface of the pavement on all other pavement types .
8. Immediately following application, drop the glass spheres and/or reflective composite optics onto the liquid marking at the application rates recommended by the binder manufacture.
9. The work will be subject to application rate checks for both Compnent A and Component B, spheres and/or reflective composite optics.

Following an application of glass spheres and/or reflective composite optics, and upon curing, ensure that the resulting marking is an adherent reflectorized stripe of the specified thickness and width that is capable of resisting deformation by traffic.

D. Protective Measures

Protect newly applied Polyurea as follows:

1. Traffic

   Control and protect traffic with warning and directional signs during striping. Set up warning signs before beginning each operation and place signs well ahead of the striping equipment. When necessary, use a pilot car to protect both the traffic and the striping operation.

2. Fresh Polyurea

   Protect the freshly painted stripe using cones or other satisfactory devices. Repair stripe damage or pavement smudges caused by traffic according to Subsection 658.3.04.

E. Appearance and Tolerance of Variance

Continually deviating from stated dimensions is cause for stopping the work and removing the nonconforming stripe. (See Section 656.) Adhere to the following measurements:

1. Width

   Do not lay stripe less than the specified width. Do not lay stripe more than 1/2 in (13 mm) over the specified width.
2. Length

   Ensure that the 10 ft (3 m) painted skip stripe and the 30 ft (10 m) gap between painted segments vary no more than ± 1 ft (300 mm) each.
3. Alignment
   a. Ensure that the stripe does not deviate from the intended alignment by more than 1 in (25 m) on straight lines or curves of 1 degree or less.
   b. Ensure that the stripe does not deviate by more than 2 in (50 mm) on curves exceeding 1 degree.

658.3.04 Quality Acceptance

A. General

For a minimum of 30 days from the time of placement, ensure the polyurea traffic pavement marking material shows no signs of failure due to blistering, excessive cracking, chipping, bleeding, staining, discoloration, oil content of the pavement materials, smearing or spreading under heat, deterioration due to contact with grease deposits, oil, diesel fuel, or gasoline drippings, spilling, poor adhesion to the pavement material, vehicular damage, and normal wear. In the event that failures mentioned above occur, ensure corrective work is completed at no additional cost to the Department.

Ensure that stripes and segments of stripes are clean-cut and uniform. Markings that do not appear uniform or satisfactory, either during the day or night, or do not meet Specifications or become marred or damaged by traffic or from other causes, will be corrected at the Contractor's expense.

Sections of stripe, words, and symbols placed according to the Plans and Specifications and have dried so that material will not be picked up or marred by vehicle tires will be accepted.

Obtain pavement marking retroreflectivity values with a 30 meter geometry retroreflectometer.

1. Correction of Alignment

   When correcting a deviation that exceeds the permissible tolerance in alignment, do the following:
   a. Remove the affected portion of stripe, plus an additional 25 ft (8 m) in each direction in accordance with Section 656.
   b. Paint a new stripe according to these Specifications.
2. Removal of Excess Material

   Remove misted, dripped, or spattered material to the Engineer's satisfaction. Do not damage the underlying pavement during removal.

   Refer to the applicable portions of Section 656.

B. Initial Retroreflectivity

1. Longitudinal Lines

   Within 30 days of installation, ensure the in-place markings meet the following minimum reflectance values:
   a. Standard Polyurea Traffic Material

	White	Yellow
Dry (ASTM E 1710)	600 mcd/lux/m^2	400 mcd/lux/m^2

b. Wet Weather Polyurea Traffic Material

	White	Yellow
Dry (ASTM E 1710)	600 mcd/lux/m^2	400 mcd/lux/m^2
Wet recovery (ASTM E 2177)	250 mcd/lux/m^2	200 mcd/lux/m^2

For each center line, edge line, and skip line, measure retroreflectivity 9 times for each mile; 3 times within the first 500 ft (152 m), 3 times in the middle, and 3 times within the last 500 ft (152 m). For projects less than one mile in length, measure retroreflectivity 9 times as above.

Record all retro reflectivity measurements on the form OMR CVP 66 in SOP 39.

2. Messages, Symbols, and Transverse Lines

Within 30 days of installation, ensure the in-place markings when tested according to ASTM E 1710 meet the following minimum reflectance value of 275 mcd/lux/m^2.

Perform at a minimum, one retroreflectivety measurement at one message, one symbol and one transverse line per intersection. Take one measurement per mile for locations other than intersections (i.e. school messages, railroad messages, bike symbols etc.)

C. Six Month Retroreflectivity (Longitudinal Lines)

Maintain the following minimum reflectance values for 180 days after installation:

1. Standard Polyurea Traffic Material

	White	Yellow
Dry (ASTM E 1710)	600 mcd/lux/m^2	400 mcd/lux/m^2

2. Wet Weather Polyurea Traffic Material

	White	Yellow
Dry (ASTM E 1710)	600 mcd/lux/m^2	400 mcd/lux/m^2
Wet recovery (ASTM E 2177)	250 mcd/lux/m^2	200 mcd/lux/m^2

Retest the in-place markings according to Subsection 658.3.04.B.1 180 days after installation to ensure these minimum retroreflectance values are maintained.

NOTE: The Contractor is responsible for retroreflectivity testing. Furnish initial test results to the Engineer within 30 days of application. Furnish 6 month test results to the Engineer within 180 days of application or prior to final acceptance, whichever comes first.

D. Thickness

Check the thicknesses on all skip lines, edge lines and center lines by placing durable tape, film, or metal plate of known and uniform thickness on an area to be striped. After the striper has passed over, remove the sample and measure the thickness with calipers or a micrometer.

For each center line, edge line, and skip line, measure thickness above the pavement 3 times for each mile; once within the first 500 ft (152 m), once in the middle, and once within the last 500 ft (152 m). For projects less than one mile in length, measure the thicknesss above the pavement 3 times.

Record thickness measurements on the form OMR CVP 66 in SOP 39.

Submit results to Engineer.

E. Corrective Work

For each mile section, if polyurea traffic stripe fails to meet Plan details or Specifications or deviates from stated dimensions, correct it at no additional cost to the Department. If removal of pavement markings is necessary, perform it according to Section 656 and place it according to this Specification. No additional payment will be made for removal and replacement of unsatisfactory striping. Ensure corrective work is completed at no additional cost to the Department. Perform testing according to this Specification. Any retest due to failures will be performed at no additional cost to the Department. Furnish all test reports to the Department.

Retroreflectivity and Thickness Longitudinal Line Deficiency: A deficiency will ensure when two or more Location Average results as recorded on form OMR CVP 66 within a One-Mile Section do not meet the performance criteria herein. The entire line within this one mile section will be determined to be deficient. If the evaluated section is less than 1.0 mile, a single Location Average result not meeting the performance criteria herein will result in the entire line to be determined to be deficient.

Retroreflectivity Transverse Markings and Symbol Deficiency: A single Location Average result on the marking or symbol not meeting the performance criteria herein will result in the marking or symbol to be determined to be deficient.

658.3.05 Verification

See SOP 39.

658.4 Measurement

When traffic stripe is paid for by the square yard (meter), the number of square yards (meters) painted is measured and the space between stripes is included in the overall measurement.

Linear measurements are made on the painted surface by an electronic measuring device attached to a vehicle. On curves, chord measurements, not exceeding 100 linear feet (30 linear meters), are used.

Traffic stripe and markings, complete in place, are measured and accepted for payment as follows:

A. Solid Traffic Stripe

Solid traffic stripe is measured by the linear foot (meter), linear mile (kilometer), or square yard (meter). Breaks or omissions in solid lines or stripes at street or road intersections are not measured.

B. Skip Traffic Stripe

Skip traffic stripe is measured by the gross linear foot (meter) or gross linear mile (kilometer). Unpainted spaces between the stripes are included in the overall measurements if the Plan ratio of 1 to 3 remains uninterrupted. Measurement begins and ends on a stripe.

C. Pavement Markings

Pavement markings, words and symbols completed according to Plan dimensions are measured by the unit.

658.5 Payment

Payment will be full compensation for the work under this Section, including the following:

- Cleaning and preparing surfaces
- Furnishing materials, including paints, beads, and thinners
- Applying, curing, and protecting paints
- Protecting traffic, including providing and placing necessary warning signs
- Furnishing tools, machines, and other equipment necessary to complete the Item

Payment will be made under:

Item No. 658	Solid polyurea traffic stripe, _____ in (mm), (color)	Per linear mile (kilometer)
Item No. 658	Skip polyurea traffic stripe, _____in (mm), (color)	Per gross linear mile (kilometer)
Item No. 658	Solid polyurea traffic stripe, _____in (mm), (color)	Per linear foot (meter)
Item No. 658	Skip polyurea traffic stripe, _____in (mm), (color)	Per gross linear foot (meter)
Item No. 658	Polyurea pavement markings, words, and symbols, (color)	Per each
Item No. 658	Polyurea traffic stripe, _____in (mm), (color)	Per square yard (meter)
Item No. 658	Wet weather solid polyurea traffic stripe, _____ in (mm), (color)	Per linear mile (kilometer)
Item No. 658	Wet weather skip polyurea traffic stripe, _____in (mm), (color)	Per gross linear mile (kilometer)
Item No. 658	Wet weather solid polyurea traffic stripe, _____in (mm), (color)	Per linear foot (meter)
Item No. 658	Wet weather skip polyurea traffic stripe, _____in (mm), (color)	Per gross linear foot (meter)
Item No. 658	Wet weather polyurea pavement markings, words, and symbols, (color)	Per each
Item No. 658	Wet weather polyurea traffic stripe, _____in (mm), (color)	Per square yard (meter)

658.5.01 Adjustments

General Provisions 101 through 150.

Section 659—Hot Applied Preformed Plastic Pavement Markings

659.1 General Description

This work includes furnishing and placing hot applied preformed plastic pavement markings according to these Specifications and at locations shown in the Plans or as otherwise directed. Use applied markings that are very durable, impervious to oil and grease, and provide immediate and continuing retroreflectivity. Use hot applied preformed plastic pavement markings that are compatible with existing alkyd and hydrocarbon thermoplastic material.

659.1.01 Definitions

General Provisions 101 through 150.

659.1.02 Related References

A. Standard Specifications

General Provisions 101 through 150.

B. Referenced Documents

Manual on Uniform Traffic Control Devices for Streets and Highways

AASHTO M 249

659.1.03 Submittals

Transfer to the Department all manufacturer warranties or guarantees for heat-applied preformed plastic marking materials. Ensure that warranties or guarantees can be transferred.

659.2 Materials

A. Marking Characteristics

Ensure that markings have the following characteristics:

1. Composition

   The pavement marking material shall consist of a homogeneous mixture of high quality hydrocarbon resin, alkyd resin, or modified ester rosin solution in conjunction with aggregates, pigments, binders, and glass beads. Use thermoplastic material that conforms to AASHTO M 249, except for relevant differences due to the material being supplied in a preformed state.

   The markings shall contain at least 30% glass beads that conform to AASHTO M 247, Type 1. Use glass beads that are clear and transparent with at least 80% true spheres. The glass beads shall have a minimum index of refraction of 1.50.

2. Pigmentation

   a. White

      The white markings shall contain at least 8% by weight of titanium dioxide pigment meeting ASTM D 476, Type II, Rutile. The color shall be Federal Highway White, Color 17886, as per Federal Standard 595. The white markings shall have a minimum daylight reflectance (Y value) at 45°/0° of 80%.

   b. Yellow

      The yellow markings shall contain sufficient yellow pigment to ensure a color of Federal Highway Yellow, Color 13538, as per Federal Standard 595. The yellow markings shall have a minimum daylight reflectance (Y value) at 45°/0° of 45%.

3. Shapes and Sizes

   Prefabricated legends and symbols must conform to the applicable shapes and sizes outlined in the "Manual on Uniform Traffic Control Devices for Streets and Highways." As an option, turn arrows and combination arrows may come without pre-applied surface glass beads to allow reversibility.

4. Thickness

   Ensure that the material is at least 0.125 in (3.175 mm) thick.

5. Retroreflectivity

   The preformed markings shall have the following initial minimum reflectivity values:

White @ 86.5° incidence angle and 1.5° divergence angle	350 candle power/ft candle ft^2 (350 mc/lx/m^2)
Yellow @ 86.5° incidence angle and 1.5° divergence angle	200 candlepower/ft candle ft^2 (200 mc/lx/m^2)

6. Skid Resistance

   The surface of the preformed markings shall provide a minimum skid resistance of 45 BPM when tested according to ASTM E 303.

B. Heating Characteristics

The preformed markings shall be capable of being affixed to bituminous or Portland cement concrete pavements by the use of the normal heat of a torch recommended by the manufacturer and according to the manufacturer's installation guidelines. The preformed markings shall have resealing characteristics so that it will fuse with itself and with previously applied marking material of the same composition under normal conditions of use.

659.2.01 Delivery, Storage, and Handling

The markings shall be manufactured and packaged in a way that permits storage at normal shelf temperatures for up to one year after purchase.

659.3 Construction Requirements

659.3.01 Personnel

General Provisions 101 through 150.

659.3.02 Equipment

General Provisions 101 through 150.

659.3.03 Preparation

General Provisions 101 through 150.

659.3.04 Fabrication

General Provisions 101 through 150.

659.3.05 Construction

A. Pre-Conditions for Applying Markings with Heat

Apply markings under the following conditions:

1. Apply markings when the ambient temperature is 35 °F (2 °C) or above.
2. Apply markings when the pavement is clean, dry, and free of debris.
3. Apply drop-on glass beads to the entire surface of preformed markings that do not have factory pre-applied surface beads.
4. Apply the drop-on glass beads to the preformed marking material while still in a liquid state. Use beads that meet the same requirements specified in Subsection 659.2.A.

659.3.06 Quality Acceptance

Materials shall be evaluated by the National Transportation Product Evaluation Program (NTPEP), the Georgia Department of Transportation or other State DOT test facilities before being approved for use. Data generated from the field tests will be used to select those materials that have performed satisfactorily during the evaluation period.

Hot applied preformed plastic pavement markings that have met the laboratory test and field test requirements will be placed on the Georgia Department of Transportation Qualified Products List. The manufacturer shall certify that the Hot Applied Preformed Plastic Pavement Markings supplied to construction and maintenance projects is formulated of the same material as when tested by NTPEP and will conform to the requirements of this Specification. Products that have met all the requirements in this Section but fail to perform adequately in actual use will be removed from the Qualified Products List.

659.3.07 Contractor Warranty and Maintenance

General Provisions 101 through 150.

659.4 Measurement

Heat-applied preformed plastic pavement markings, complete in-place and accepted, are measured as follows:

A. Solid Traffic Stripe

Solid traffic stripe of the color, width, and type shown on the Plans or in the Proposal will be measured by the linear foot (meter) or linear mile (kilometer) as specified. Breaks or omissions in solid lines or stripes at street or road intersections will not be measured for payment.

B. Skip Traffic Stripe

Skip traffic stripe of the color, width, and type shown on the Plans or in the Proposal will be measured by the gross linear foot (meter) or gross linear mile (kilometer) as specified. The unpainted spaces between the stripes will be included in the overall measurement if the Plan ratio remains uninterrupted. Measurement will begin and end on a stripe.

C. Payment by Square Yard (Meter)

When hot applied preformed plastic pavement markings are paid for by the square yard (meter), the actual number of square yards (meters) covered will be measured in the overall measurement, including the space between the markings. The color, width, and type shall be indicated on the Plans.

D. Heat Applied Preformed Plastic

Each heat-applied preformed plastic word or symbol, complete according to Plan dimensions, is measured by the unit. The code for each word or symbol is stated in the Plan.

659.4.01 Limits

General Provisions 101 through 150.

659.5 Payment

Payment in each case will be full compensation for all aspects of heat-applied markings, including adhesives, cleaning, application, and traffic control necessary to complete the Item.

Payment will be made under:

Item No. 659	Hot applied preformed plastic solid pavement markings_____ in (mm), (color), (type)	Per linear foot (meter)
Item No. 659	Hot applied preformed plastic solid pavement markings_____ in (mm), (color), (type)	Per linear mile (kilometer)
Item No. 659	Hot applied preformed plastic skip pavement markings_____ in (mm), (color), (type)	Per gross linear foot (meter)
Item No. 659	Hot applied preformed plastic skip pavement markings_____ in (mm), (color), (type)	Per gross linear mile (kilometer)
Item No. 659	Hot applied preformed plastic pavement markings	Per square yard (meter)
Item No. 659	Hot applied preformed plastic pavement markings words or symbols (color), (type)	Per each

659.5.01 Adjustments

General Provisions 101 through 150.

Section 660—Sanitary Sewers

660.1 General Description

Specifications for this work will be included elsewhere in the Contract.

Section 664—Electric Distribution Systems

664.1 General Description

Specifications for this work will be included elsewhere in the contract.

Section 665—Gas Distribution System

665.1 General Description

Specifications for this work will be included elsewhere in the contract.

Section 666—Vertical Drainage Wicks

666.1 General Description

This work includes furnishing and installing vertical drainage wicks according to locations and depths shown on the Plans, or as directed by the Engineer.

666.1.01 Definitions

General Provisions 101 through 150.

666.1.02 Related References

A. Standard Specifications

Section 106—Control of Materials

B. Referenced Documents

ASTM D 4632

ASTM D 751

ASTM D 1424

666.1.03 Submittals

A. Materials Certification

Furnish the Engineer with materials certification, in duplicate, according to Subsection 106.05, “Materials Certification.”

B. Installation Sequence and Method Details

Submit installation sequence and method details to the Engineer for review at least two weeks before installing the drainage wick.

The Engineer’s approval of the installation sequence and method does not constitute acceptance of the installation method.

If at any time the Engineer feels the installation method does not produce a satisfactory drainage wick, alter the method or equipment to comply with these Specifications.

666.2 Materials

A. Drain Fabrication

Ensure the following:

- Use drainage wicks consisting of a band–shaped plastic case, permitting continuous vertical drainage, wrapped in a filter jacket, installed in the ground by displacement methods, and spaced and arranged as shown on the Plans. Ensure drainage wicks are a prefabricated type consisting of a plastic drainage core encased in or integrated with a nonwoven polyester filter jacket. Use a band-shaped drain with an aspect ratio (width divided

by thickness) not exceeding 50. Ensure the jacket allows free passage of pore water to the core without loss of soil material or piping. Ensure the core provides continuous vertical drainage.

- Ensure the assembled drains are resistant to wet rot, mildew, bacterial action, insects, salts, acids, alkalis, solvents, or any other ingredients in the site groundwater harmful to the drains. Use drains free from defects, rips, holes or flaws.
- Ensure the filter jacket is capable of resisting all bending, puncturing, and tensile forces imposed during installation and during the design life of the drain. Use a jacket material resistant to localized damage (e.g., punching through the filter by sand or gravel particles) and sufficiently rigid to withstand lateral earth pressures due to embedment and surcharge so the vertical flow capacity through the core will not be adversely affected. Ensure the jacket material is sufficiently flexible to bend smoothly during installation and induced consolidation settlement without damage, and will not undergo cracking or peeling during installation of the drain.
- Ensure the core is a continuous plastic material fabricated to promote drainage along the axis of the vertical drain.

B. Physical Properties

Ensure that the drain meets minimum requirements according to the following:

		Filter
Breaking Load	ASTM D 4632	30 lbs/in width (5 N/mm width)
Mullenburst	ASTM D 751	85 lbs/in^2 (585 kPa)
Elmendorf Tear	ASTM D 1424	200 grams
Permeability Coefficient		1x10^{-4} in/sec (3x10 $^{-3}$ mm/s)

666.2.01 Delivery, Storage, and Handling

A. Drain Protection

Ensure that the drain is wrapped in burlap or a similar heavy-duty covering during shipment and storage.

B. Storage Protection

Protect the storage area from sunlight, mud, dirt, dust, debris, and detrimental substances.

666.3 Construction Requirements

666.3.01 Personnel

General Provisions 101 through 150.

666.3.02 Equipment

The Contractor is responsible for selecting the proper size and amount of equipment.

A. Approval of Equipment

Adhere to the following requirements for equipment:

1. Secure approval of all equipment before beginning work.
2. Promptly replace or supplement unsatisfactory equipment.
3. Note that equipment is approved for use on a trial basis.
4. Remove, replace, or supplement equipment that proves unsatisfactory after a short test section is complete.

B. Required Equipment

Choose a type of carrier depending upon the desired installation force, and then ensure the following:

- The carrier is equipped with a mandrel or sleeve to protect the wick from tears, cuts, and abrasions during installation.
- The protective mandrel or sleeve has at least a 10 in² (6450 mm²) cross sectional area.

C. Precautions

Take precautions to protect instrumentation devices.

Replace, at no additional cost to the Department, any equipment that is damaged or becomes unreliable during construction due to construction operations.

666.3.03 Preparation

A. Location Stakes

Prior to drain installation, the Engineer will stake the proposed drain locations. Take reasonable precautions to preserve the stakes.

Ensure that drain locations do not vary by more than 6 in (150 mm) from locations indicated on the Plans, or as directed by the Engineer.

B. Trial Drain

Install a trial drain at a location designated by the Engineer to demonstrate that the equipment, method, and materials will provide a satisfactory installation according to this Specification.

666.3.04 Fabrication

General Provisions 101 through 150.

666.3.05 Construction

A. Installation Depth

1. Install drainage wicks to the depth shown on the Plans or to a depth where reasonable efforts at further penetration fail.

   The Engineer may vary the wick depths, spacings, or numbers installed, and may revise Plan limits for this work.
2. Provide a means of determining the wick depth and quantity of wick used at each drain location and at anytime.

B. Installation of Drains

1. Normal Installation

   Use a mandrel or sleeve to install the drainage wick, as follows:
   a. Ensure that the mandrel or sleeve completely encloses and protects the drainage wick during installation.
   b. Force the mandrel containing the wick vertically into the ground to the required depth.
   c. Cut the mandrel neatly at its upper end after installation.
   d. Ensure that a 4 in to 8 in (100 mm to 200 mm) length of wick protrudes from the ground.
2. Drilling Upper Soils

   If necessary, drill through the dense upper soils before installing the prefabricated drains. Do not drill more than 2 ft (600 mm) into the underlying compressible soils, as determined by the Engineer.
3. Obstruction of Depth

   If obstructions cannot be penetrated using normal and accepted procedures, do the following:
   a. Complete the drain from the point of obstruction to the surface.
   b. Notify the Engineer.
   c. At the direction of the Engineer, install a new drain within 18 in (450 mm) of the obstructed drain.
4. Wick

Make splices or connections in the drainage wick to ensure continuity.

C. Wick Alignment

1. Carefully check equipment for plumbness before advancing each wick.
2. Ensure that wicks do not deviate more than 1 in/ft (85 mm/m) from the vertical.

666.3.06 Quality Acceptance

No compensation will be allowed for materials, work performed, or drilling if wicks are unsatisfactory. The Engineer will reject wicks that are:

- Out of location by more than 6 in (150 mm)
- Damaged in construction
- Improperly completed

666.3.07 Contractor Warranty and Maintenance

General Provisions 101 through 150.

666.4 Measurement

This work is measured according to the following:

- Drill holes are measured in linear feet (meters), to the nearest 0.1 ft (0.03 m).
- Vertical drainage wicks are measured in linear feet (meters), to the nearest 0.1 ft (0.03 m).

666.4.01 Limits

General Provisions 101 through 150.

666.5 Payment

This work will be paid for at the Contract Price for the accepted quantity of drill holes and vertical drainage wicks, complete and in-place. Payment is full compensation for:

- Drilling holes
- Furnishing materials
- Placing materials
- Providing labor, equipment, tools, and incidentals necessary to complete the work

The Contract Price will be for the number of drains at the spacing shown on the Plans.

Payment will be made under:

Item No. 666	Drill holes	Per linear foot (meter)
Item No. 666	Vertical drainage wicks	Per linear foot (meter)

666.5.01 Adjustments

General Provisions 101 through 150.

Section 667—Horizontal Drain

667.1 General Description

Specifications for this work will be included elsewhere in the Contract.

Section 668—Miscellaneous Drainage Structures

668.1 General Description

This work includes constructing catch basins, drop inlets, manholes, junction boxes, spring boxes, drain inlets, special inlets with safety grates, and vertical tee sections.

Construct according to these Specifications and the lines and grades shown on the Plans, or as established by the Engineer.

668.1.01 Definitions

General Provisions 101 through 150.

668.1.02 Related References

A. Standard Specifications

Section 207—Excavation and Backfill for Minor Structures

Section 500—Concrete Structures

Section 607—Rubble Masonry

Section 608—Brick Masonry

Section 801—Fine Aggregate

Section 830—Portland Cement

Section 834—Masonry Materials

Section 843—Concrete Pipe

Section 853—Reinforcement and Tensioning Steel

Section 854—Castings and Forgings

Section 866—Precast Concrete Catch Basin, Drop Inlet, and Manhole Units

B. Referenced Documents

General Provisions 101 through 150.

668.1.03 Submittals

General Provisions 101 through 150.

668.2 Materials

The structures in this section may be constructed of brick, cast-in-place concrete, or pre-cast concrete, unless the Plans or Proposal specifies a specific type of construction.

Use rubble masonry only when specified on the Plans. Ensure that materials meet the following specifications:

Material	Section
Class “A” or “B” Concrete	500
Sand for Bedding Material	801.2.01
Fine Aggregate for Mortar	801.2.02
Portland Cement	830.2.01
Brick	834
Masonry Stone	834
Mortar and Grout	834
Nonreinforced Concrete Pipe	843
Steel Bars for Reinforcement	853.2.01
Gray Iron Castings	854.2.01
Precast Reinforced Concrete Catch Basin, Drop Inlet, and Manhole Units	866

Ensure that the materials for fabricating special inlets and their safety grates are according to Plan details.

Construct the following manholes and drainage structures from pre-cast or cast-in-place concrete:

- Structures within the backfill limits of mechanically stabilized embankment retaining walls
- Structures within 5 ft (1.5 m) of the wall foundation’s front.

668.2.01 Delivery, Storage, and Handling

General Provisions 101 through 150.

668.3 Construction Requirements

668.3.01 Personnel

General Provisions 101 through 150.

668.3.02 Equipment

General Provisions 101 through 150.

668.3.03 Preparation

General Provisions 101 through 150.

668.3.04 Fabrication

General Provisions 101 through 150.

668.3.05 Construction

A. Excavation and Backfill

Excavate and prepare foundations for the structures included in this section; place pipe through the structures according to Section 207.

B. Concrete

Concrete units may be either poured-in-place or precast. Construct units as follows:

1. Poured-in-Place Units

The throat or other nonreinforced portions of catch basins may be Class B concrete. Use Class A concrete for the top slab. Construct units according to Section 500.

2. Pre-Cast Reinforced Concrete Units

   Construct pre-cast reinforced concrete units as follows:

   a. Holes for Pipe

      Cast each unit with the number and dimensions of pipe holes necessary to incorporate the unit into the drainage system according to Plan details.

      Installation conditions may require additional pipe for which no holes have been cast. If so, make the holes and repair or replace, to the Engineer's satisfaction, pipe damaged during the process.

   b. Pipe Connections

      Use mortar or Class A concrete to connect pipe to units.

   c. Installation of Pre-cast Concrete

      1) Pre-cast Reinforced Units: Set these units to within 1/2 in (± 13 mm) of grade on a bed of compacted sand 2 in to 3 in (50 mm to 75 mm) thick.

      2) Sectional Precast Reinforced Units: When using these units to build-up extra-depth catch basins or drop inlets, fill the joints between sections with mortar and wipe smooth.

C. Brick Masonry

Construct brick masonry structures according to Section 608.

D. Mortar Rubble Masonry

Construct rubble masonry structures according to Section 607.

E. Castings

Hold frame castings securely in place to proper line and grade. Make castings an integral part of the complete structure. After completion, ensure that castings subject to traffic use are firm and stable under traffic.

F. Maintenance

Thoroughly clean fallen masonry, silt, debris, and other foreign matter from structures.

G. Safety Grates

Fabricate safety grates according to Plan details.

H. Sanitary Sewer Manholes

Ensure that sanitary and combination sanitary and storm sewer manholes conform to the following requirements and the related Specifications.

1. Form Invert Channels

   Shape invert channels to the lines and grades shown on the Plans, or as established by the Engineer. Ensure that channel surfaces are smooth.

   Form invert channels by one of the following methods:

   - Directly form the invert channel in the concrete base of the manhole.
   - Construct the invert channel of brick and mortar.
   - Lay half-round tile in the concrete base of the manhole.
   - Lay round sewer pipe through the manhole and cut out the top half of the pipe after the concrete base has set. Do not use this method if the Plans provide for an offset drop in the invert.

2. Plaster Outside Walls

Plaster outside walls as follows:

a. Saturate the outside wall of each brick manhole with water.

b. Plaster the wall smooth with a mortar coat at least 1/2 in (13 mm) thick. Manufacture the mortar according to Section 834 with the following exceptions:

- Manufacture the mortar with one part cement to two parts mortar sand.
- Do not add hydrated lime.

3. Connections to Manholes

Complete manhole connections to the Engineer's satisfaction and as follows:

a. Carefully connect existing sewer lines to new manholes to prevent infiltration of foreign substances.

b. Construct manholes in or adjacent to existing sewer lines according to Section 660 to maintain continuous sewage flow in existing lines.

668.3.06 Quality Acceptance

General Provisions 101 through 150.

668.3.07 Contractor Warranty and Maintenance

General Provisions 101 through 150.

668.4 Measurement

Catch basins, drop inlets, manholes, junction boxes, drain inlets, special inlets, and safety grates, complete in place and accepted, are measured for payment according to the following:

A. Catch Basins and Drop Inlets

Each catch basin or drop inlet is grouped for measurement as follows:

- Group 1: Structures connected to pipe 36 in (900 mm) or less in diameter, regardless of the pipe skew
- Group 2: Structures connected to pipe over 36 in (900 mm) diameter regardless of the pipe skew

Catch basins or drop inlets, complete in place and accepted, are measured by the unit.

In addition, each catch basin or drop inlet deeper than 6 ft (1.8m) is measured for additional payment. The extra depth is measured in linear feet (meters).

B. Manholes

Manholes are measured for payment as follows:

1. Sanitary and Storm Sewer Manholes

Sanitary sewer manholes and storm sewer manholes are measured separately and divided into two types:

- Type 1: Structures connected to pipe 42 in (1050 mm) or less in diameter regardless of the pipe skew
- Type 2: Structures connected to pipe 48 in to 84 in (1200 mm to 2100 mm) diameter regardless of the pipe skew

Each manhole is measured by the unit.

2. Manhole Additional Depth

In addition to Types 1 and 2 above, each Manhole deeper than 6 ft (1.8 m) is measured for additional payment, termed "manhole additional depth." This additional depth is measured in linear feet (meters) and does not include the upper 6 ft (1.8 m). Manhole additional depth is classed as follows:

- Manhole Additional Depth, Class 1: Applies to each manhole deeper than 6 ft (1.8 m), but not deeper than 10 ft. (3.0 m) Class 1 payment is for the manhole depth between 6 ft and 10 ft. (1.8 m and 3.0 m).
- Manhole Additional Depth, Class 2: Applies to each manhole deeper than 10 ft (3.0 m), but not deeper than 20 ft (6.1 m). Class 2 payment is for the manhole depth between 6 ft and 20 ft (1.8 m and 6.1 m).

- Manhole Additional Depth, Class 3: Applies to each manhole deeper than 20 ft (6.1 m), but not deeper than 30 ft (9.1 m). Class 3 payment is for the manhole depth between 6 ft and 30 ft (1.8 m and 9 m).
- Manhole Additional Depth, Class 4: Applies to each manhole deeper than 30 ft (9 m), but not deeper than 45 ft (14 m). Class 4 payment is the manhole depth between 6 ft and 45 ft (2 m and 14 m).

Manhole additional depth is measured for payment at the class that includes the greatest depth below the original 6 ft (1.8 m).

For example, a manhole 32 ft (11m) deep would be measured and paid for as follows:

Storm (or sanitary) sewer manhole, type_____	Per each
Storm (or sanitary) sewer manhole, type_____, additional Depth Class 4	26 linear feet (9 linear meters)

C. Junction Boxes, Spring Boxes, and Drain Inlets

Junction boxes, spring boxes, and drain inlets are measured by the unit.

1. Each junction box will be complete according to Plan details.
2. Each drain inlet will consist of a pipe elbow or tee, concrete collar, and casting of the required diameter.
3. Each spring box will be complete according to Plan details.

D. Safety Grates

Safety grates fabricated and installed according to Plan details are measured by the square foot (meter), computed from the overall surface dimensions of each grate.

E. Special Inlets for Safety Grates

Special inlets, complete in place, are measured for payment in cubic yards (meters) according to Section 500.

F. Vertical Tee Sections (or Saddles)

Vertical tee sections are not measured for separate payment.

668.4.01 Limits

General Provisions 101 through 150.

668.5 Payment

Payment for the various structures under this Section will be made as follows:

A. Catch Basins and Drop Inlets

Catch basins or drop inlets will be paid for at the Contract Price per each.

Depth in excess of 6 ft (1.8 m) will be paid for at the Contract Price per linear foot (meter).

Payment is full compensation for the following:

- Furnishing castings
- Making pipe connections regardless of skew
- Providing materials, making forms, and disposing of surplus material

B. Manholes

Sanitary sewer and storm sewer manholes, complete in place, will be paid for at the Contract Price per each.

Manhole additional depth of the appropriate class will be paid for at the Contract Price per linear foot (meter).

Payment is full compensation for the following:

- Furnishing castings, fittings, and other appurtenances called for on the Plans to complete the Item
- Making pipe connections regardless of skew
- Providing materials, making forms, and disposing of surplus material

NOTE: No additional payment will be made for connecting manholes to existing or new sewer lines. Include costs related to connections in the Contract Price for the structure.

C. Junction Boxes, Spring Boxes, and Drain Inlets

Junction boxes, spring boxes, or drain inlets will be paid for at the Contract Price per each. Payment is full compensation for the following:

- Furnishing castings, fittings, and other appurtenances called for on the Plans to complete the Item
- Making pipe connections regardless of skew
- Providing materials, making forms, and disposing of surplus material

D. Pipe

Pipe entering or exiting catch basins, drop inlets, manholes, junction boxes, spring boxes, or drain inlets, will be paid for under the section of the Specifications governing the pipe.

E. Sand Bedding Material for Precast Structures

No separate payment will be made for this material. Its cost is included in the Contract Price for the structure under which it is used.

F. Excavation and Normal Backfill

No separate payment will be made for excavation and normal backfill. Their cost is included in the Contract Price for the structure being excavated.

G. Safety Grates

Safety grates will be paid for at the Contract Price per square foot (meter).

H. Inlets for Safety Grates

Inlets for safety grates will be paid for at the Contract Price per cubic yard (meter) of Class “A” concrete, including reinforcing steel.

I. Vertical Tee Sections (or Saddles)

Vertical tee sections will be included in payment for the section of structure they are incorporated in.

No separate payment will be made for excavation, backfill, and disposal of surplus material.

Payment will be made under:

Item No. 668	Catch basin, group_____	Per each
Item No. 668	Catch basin, group_____ additional depth	Per linear foot (meter)
Item No. 668	Drop inlet, group_____	Per each
Item No. 668	Drop inlet, group_____ additional depth	Per linear foot (meter)
Item No. 668	Sanitary sewer manhole, type_____	Per each
Item No. 668	Sanitary sewer manhole, type_____, additional depth class_____	Per linear foot (meter)
Item No. 668	Storm sewer manhole, type_____	Per each

Item No. 668	Storm sewer manhole, type_____, additional depth class_____	Per linear foot (meter)
Item No. 668	Junction box	Per each
Item No. 668	Spring box	Per each
Item No. 668	Drain inlet, __ in (mm)	Per each
Item No. 668	Safety grate, type_____	Per square foot (meter)
Item No. 500	Class A concrete, including bar reinforcing steel	Per cubic yard (meter)

668.5.01 Adjustments

General Provisions 101 through 150.

Section 670—Water Distribution System

670.1 General Description

Specifications for this work will be included elsewhere in the Contract.

Section 676—Appurtenances for Water Systems

676.1 General Description

Specifications for this work will be included elsewhere in the Contract.

Section 680—Highway Lighting

680.1 General Description

This work includes furnishing and installing roadway and structure lighting systems according to the Specifications and Plan details.

680.1.01 Definitions

Conduit: Metallic or nonmetallic pipe, tube, or duct.

Rigid Conduit: Metallic conduit unless otherwise noted.

680.1.02 Related References

A. Standard Specifications

Section 205—Roadway Excavation

Section 500—Concrete Structures

Section 681—Lighting Standards and Luminaires

Section 682—Electrical Wire, Cable, and Conduit

Section 683—High Level Lighting Systems

Section 800—Coarse Aggregate

Section 801—Fine Aggregate

Section 832—Curing Agents

Section 853—Reinforcement and Tensioning Steel

Section 854—Castings and Forgings

Section 870—Paint

Section 920—Lighting Standards and Towers

Section 921—Luminaires

Section 922—Electrical Wire and Cable

Section 923—Electrical Conduit

Section 924—Miscellaneous Electrical Materials

B. Related Documents

GDT 7

GDT 59

GDT 67

680.1.03 Submittals

A. Purchase List

Before purchasing materials, submit 7 copies of the complete materials and structures list, including Shop Drawings, to the Engineer for approval. Include the manufacturer's name, catalog number(s), and other descriptive data needed to clearly define each Item.

B. Manufacturer's Certifications

1. Certification of Construction Items

   Secure supplier or manufacturer certifications, including mill certificates, guaranteeing the construction items were manufactured according to the Specifications.

   Ensure that the certificate shows that representative samples were tested and test results conform to the Specifications.

2. Certification of Quantity

   Attach a copy of the bill of lading, sales order, or list showing the quantity of materials furnished for a specific project. Make this part of the certification by reference.

C. Manufacturer's Guarantees

After the work is complete and accepted, obtain manufacturer's guarantees for the mechanical and electrical equipment used.

Give these to the Engineer who will pass them to the agency responsible for continued equipment maintenance.

680.2 Materials

Furnish only new materials and equipment for this work. Ensure that materials meet the following requirements unless otherwise indicated:

Material	Section
Portland Cement Concrete, Class A	500
Coarse Aggregate	800
Fine Aggregate	801
Cement Concrete Curing Materials	832
Bar Reinforcement for Concrete Structures	853.2.01
Gray Iron Castings	854.2.01
Paints (Field Painting)	870
Lighting Standards and Towers	920
Luminaires	921
Electric Wire and Cable	922
Electric Conduit	923
Miscellaneous Electrical Materials	924

A. Codes and Regulations

Ensure that all materials and work performed meet the latest revisions of the following standard codes and regulations:

- National Electrical Code (NEC)
- National Electrical Safety Code
- Illuminating Engineering Society
- American National Standards Institute (ANSI)
- Power company regulations and standards
- Codes, regulations, and rules in the work area or municipality

In addition to the above, ensure that electrical materials meet the following standards, provided a standard exists for that material:

- Underwriter's Laboratories, Inc. (UL)
- American Institute of Electrical Engineers (AIEE)
- National Electrical Manufacturer's Association (NEMA)

680.2.01 Delivery, Storage, and Handling

Dispose of excess or unsuitable material according to Section 205.

680.3 Construction Requirements

680.3.01 Personnel

A. Approved Contractors

Ensure that the Contractor performing this work is on the Department's list of approved electrical contractors or electrical subcontractors.

B. Qualified Electrician

Always have a qualified electrician on the job site when pulling electrical wiring or making electrical connections.

A qualified electrician is either of the following:

- An electrician with a Class II license issued by the Georgia State Construction Industry Licensing Board

- An electrician who has completed an approved four-year apprenticeship training program and is classified as a Journeyman Electrician

Have the qualified electrician show his or her classification to the Engineer in charge. For further definition, see Subsection 755.1.01.

680.3.02 Equipment

Ensure that equipment is at the project site and approved before construction begins.

680.3.03 Preparation

Before beginning work, pay applicable fees and obtain needed permits from power companies or governmental agencies.

680.3.04 Fabrication

General Provisions 101 through 150.

680.3.05 Construction

A. Installing Conduit

1. General Requirements for Conduit

   Install the specified size and type of conduit at the locations given on the Plans, or as directed.

   a. Cut and ream conduit as follows:
      1) Cut metallic conduit threads and then ream the ends.
      2) Ream other conduit as necessary.
      3) Cut conduit ends square.
      4) Ensure that conduit ends butt solidly in the joints to form a smooth raceway for cables.

   b. Ensure conduit joints form a watertight seal by doing the following:
      1) Coat metallic conduit threads with red or white lead, pipe compound, or thermoplastic seal, and then securely connect them.
      2) Form asbestos cement conduit joints with hot tar, asphalt, or bitumen paint, then drive tightly.
      3) Form plastic and bituminous fiber conduit joints as recommended by the conduit manufacturer and as approved by the Engineer.

   c. Install bushings in conduit to protect the conductors.

   d. Cap or plug conduit as follows:
      1) Thread and cap the ends of metallic conduit intended for future use.
      2) Plug the ends of nonmetallic conduit runs to keep water or other foreign matter out of the conduit.

   e. Build conduit runs in straight lines where possible.

      If sweeps are necessary, use long sweep bends with a radius of at least 6 times the conduit's nominal diameter, unless otherwise specified.

2. Conduit on Structures

   Install conduits, condulets, hangers, expansion fittings, and accessories on structures according to the Plans and the following, unless otherwise specified:

   a. Run conduit parallel to beams, trusses, supports, pier caps, etc., as directly as possible.
   b. Install horizontal runs in a slight grade without forming low spots that may prevent proper drainage.
   c. Run conduits with smooth, easy bends.
   d. Hold conduit in boxes with locknuts.
   e. Do not clamp or attach conduit to beam flanges.
   f. Use bushings to protect the conductors.

3. Underground Conduit Installation

Use encased or direct burial conduit for underground installations. Install the conduit in a trench excavated according to Plan dimensions and lines. Follow the requirements for avoiding obstructions, described in Subsection 680.3.05.A.3.b, below.

a. Trench Excavation

Unless specified on the Plans, do not excavate conduit trenches through existing pavement or surfaced shoulders. Install the conduit under the existing pavement by jacking, boring, or using other approved means.

When the Plans specifically allow a trench through an existing pavement or surfaced shoulder, restore the pavement, surface, base, and subgrade to the Engineer's satisfaction.

Include pavement surface, base, and subgrade removal, disposal, and restoration in the Contract Price for the Items to which they pertain.

Excavate trenches as follows:

1) Unless otherwise specified, cut conduit trenches on a slight grade (0.25 percent minimum) for drainage.
2) When the grade cannot be maintained all one way, grade the duct lines from the center in both directions, down to the ends. Avoid pockets or traps where moisture may accumulate.
3) Make the trench walls vertical.
4) Tamp the trench bottom as necessary for a firm conduit foundation.
5) Sheet and brace the trenches when required.
6) Adequately support pipe and other structures exposed in trenches if support is necessary to prevent damage.

   Include furnishing, installing, and removing sheeting, bracing, and supports in the Contract Prices for other items, as they pertain.

b. Obstructions to Excavation

Before excavating, determine the location of electrical lines, drainage, or utility facilities. Avoid damaging these while working. In addition, avoid conflict with proposed guardrail, sign posts, etc.

If necessary due to obstructions, slightly change the locations of conduit runs, pull boxes, etc., as approved by the Engineer.

Make the following allowances around obstructions:

1) Where possible, provide at least 12 in (300 mm) between the finished conduit runs and utility facilities, such as gas lines, water mains, and other underground facilities not related to the electrical system.
2) Where the conduit run is adjacent to concrete walls, piers, footings, etc., maintain at least 4 in (100 mm) of undisturbed earth or firmly compacted soil between the conduit and the adjacent concrete.
3) When the conduit is encased, maintain at least 4 in (100 mm) of undisturbed earth or firmly compacted soil between the encasement and adjacent concrete.

c. Encased Conduit

Place encased conduit at the locations shown on the Plans.

Unless otherwise specified, follow these requirements for encased conduit:

- Use Class A concrete according to Section 500.
- Use precast concrete encasement only if approved by the Engineer.
- Run a mandrel test on completed installations.
- Ream duct openings to remove burrs or foreign matter.
- Immediately following testing, thoroughly clean conduit in a manner acceptable to the Engineer.
- After cleaning finished conduit that will not be wired until a future date, provide and install a weatherproof cap at each open end. Have the Engineer inspect and approve this work.

Install new underground concrete encasement as follows:

1) Construct encasement under pavements or surfaces so that it extends at least 12 in (300 mm) beyond the outside edges of pavement, paved shoulders, sidewalks, or curbs, when no shoulder or sidewalk is indicated.
2) Ensure that the end of installed conduit extends at least 6 in (150 mm) beyond the encasement.

- If using Type I nonmetallic conduit in the encasement, use Type II nonmetallic conduit for the 6 in (150 mm) beyond the encasement and for the last 24 in (600 mm) within the encasement.

3) Place 3 in (75 mm) of concrete in the trench bottom to support the conduit.
4) Plug the conduit ends temporarily to keep concrete or foreign material out, then place the conduit in the trench.
5) Pour concrete into the trench to at least 3 in (75 mm) above the conduit.
6) Do not encase conduit in concrete until tested, inspected, and approved by the Engineer. (See Subsection 680.3.05.A.5, below.)
7) Cure concrete encasement according to Subsection 500.3.05.Z, except reduce the curing period to 24 hours.

4. Direct Burial Conduit

   Install direct burial conduit underground according to the Plans using the following conduit types:

   - Rigid galvanized steel
   - Rigid aluminum
   - Bituminous fiber
   - Asbestos cement
   - Unplasticized polyvinyl chloride

   When the trench bottom is rock, install direct burial conduit in a bed of well-compacted, fine-grained soil at least 4 in (100 mm) thick.

   Ensure the trench is deep enough for the finish cover to be:

   - At least 18 in (450 mm) from the top surface of raw ground
   - At least 24 in (600 mm) from the bottom side of pavement

5. Backfill Over Underground Conduit

   Do not backfill encased conduit until the concrete encasement has cured at least 24 hours.

   a. Once the Engineer has inspected and approved the direct burial conduit installation, promptly backfill it to the required grade. Use soil without rocks or other foreign matter.
   b. Backfill with approved material in layers no deeper than 6 in (150 mm) loose depth.
   c. Compact each layer to 100 percent of the maximum dry density as determined by test method GDT 7, GDT 59, or GDT 67.

6. Testing Conduit

   After installing conduit, test it with a mandrel in the Engineer's presence as follows:

   a. Use a 2 in (50 mm) mandrel with a diameter 1/4 in (6 mm) smaller than the conduit diameter.
   b. Repair conduits that the mandrel will not pass through. If repairs cannot be made to the Engineer's satisfaction, remove and replace the conduit at no additional cost to the Department.

B. Constructing Pull and Junction Boxes

Construct pull and junction boxes according to the design, dimensions, and locations shown on the Plans.

1. Box Construction

   a. Construct concrete boxes from Class A concrete according to Section 500. Ensure that precast concrete boxes follow the same requirements.
   b. Use manufactured units if the Engineer determines that they are equal to concrete boxes in design, quality, and structural strength.

2. Covers

   Provide cast iron, steel, or reinforced concrete covers with each pull or junction box according to the Plans.

   Ground the cast iron or steel covers to electrical junction or pull boxes according to NEC Section 370-18(c) and NEC Section 250-42.

3. Conduit Entrance Holes

   After installing conduit, seal the conduit entrance holes in pull or junction boxes to the Engineer's satisfaction.

   Blank off unused entrance holes and openings that will be used in the future to extend conduit. Use suitable plastic, bituminous fiber, or other approved plugs that keep foreign matter out.

4. Drainage

   Provide pull and junction boxes with a drainage hole unless the application or the Engineer dictate otherwise.

   Provide a drainage system for each ground-mounted box to ensure that no water accumulates inside the box.

C. Installing Underground Cable for Lighting Circuits

For underground lighting circuits, use cable with or without conduit according to the Plans.

When installing cable under existing pavements or surfaced shoulders, install specified conduit according to Subsection 680.3.05.A.4.

1. Cable Slack

   When cable is brought through the base of the lighting standard or junction box, leave enough slack to allow the connections to be made outside the standard or box.

2. Cable in Conduit

   Carefully pull cables into place in conduits using approved methods so that the cable is installed without electrical or mechanical damage. Install as follows:

   a. Use powdered soapstone, talc, or other inert lubricants when placing conductors in conduit.

   b. Handle and install conductors carefully to prevent kinks, bends, or other distortions that could damage the conductor or outer covering.

   c. Pull all cables within a single conduit at the same time.

      When pulling cables through hand holes in pole shafts, etc., place a pad of firm rubber or other suitable material between the cable and the opening edges to prevent cable damage.

3. Direct Burial Cable in Trenches

   Do not unreel and pull cables into the trench from one end. Unreel and lay them alongside the trench, then lay them in the trench as follows:

   a. "Snake" the cables slightly in the trench to allow for settling of earth.

   b. Do not allow cable to crossover in the trench.

4. Splices

   Splice conductors according to the National Electrical Code and the splice manufacturer's recommendations. Splices are subject to the Engineer's approval.

   Follow these requirements for splicing conductors, including underground cable splices, if specified:

   - Make splices watertight.
   - Make splices only in junction boxes and pole bases unless otherwise shown on the Plans.

     When making straight or line splices in the same-sized conductors, use tin-plated copper compression tubular splices.
   - When making splices in different-sized conductors or conductors with different terminating directions:

     a. Use tin-plated copper compression ring tongue terminals on each conductor.

     b. Bolt the conductors/terminals together with stainless steel or high strength silicone bronze hardware.
   - Use locknuts, pal nuts, or lock washers to keep connections tight. Do not use split bolt connectors.
   - Use an oxidation inhibitor compound on aluminum conductor connections.

5. Heat-Shrinkable Tubing Around Splices

   After making a conductor splice, insulate it with heat-shrinkable tubing, supplied by the manufacturer, with an adhesive coating on the inner wall.

Follow these requirements for heat-shrinkable tubing:

- Use shrink tubing with insulation thickness equal to or greater than the insulation thickness of the conductor.
- Use UL listed heat-shrinkable tubing that meets ANSI C119.1 (latest edition) requirements for submersible and direct buried splices.

Apply heat-shrinkable tubing as follows:

a. When connections are bolted together, wrap the bolted connection with cloth tape before applying the heat-shrinkable tubing.

b. Pad sharp points and edges on splices to prevent the heat-shrinkable tubing from splitting during shrinking.

c. Place the shrink tubing to have at least 3 in (75 mm) of seal length on the conductor beyond the splice after the tube is fully recovered.

6. Grounding

Ground underground cable as follows:

a. Connect neutral/grounding conductors to the ground rod at all control points and to the ground wire cast in pole foundations. Use the type and size of continuous neutral/grounding conductors shown on the Plans. Connect according to Plan details.

b. Install ground rods adjacent to light standard bases at locations shown on the Plans. Install ground rods in one of the following ways:

1) Driven Ground Rods

a) Drive single ground rods vertically until the top of the rod is at least 12 in (300 mm) below the finished ground.

b) Attach a length of No. 6 AWG, bare solid, soft drawn, or medium-hard drawn copper ground wire to the ground rod. Use suitable ground rod clamps.

c) Connect the wire to the standard base grounding nut.

2) Laid Ground Rods

When sufficient penetration cannot be obtained in the above manner, place the following ground rod system:

a) Place 3 parallel ground rods at least 6 ft (1.8 m) center-to-center horizontally and at least 12 in (300 mm) below the finished ground.

b) Join and fasten these rods to the grounding nut of the standard base with No. 6 AWG, bare solid, soft drawn or medium hard drawn copper ground wire and suitable clamps.

D. Installing Light Standard and Towers

Install the specified design, kind, and size of light standards or towers at Plan-specified locations. Install these structures, complete with specified supporting assembly and luminaires, to the mounting heights shown on the Plans.

Consider transformer bases to be an integral part of the lighting standard unless otherwise specified.

Install light standards and towers as follows:

1. Installing Foundations

a. Foundations for Bolt-Down Base Standards with Anchor or Transformer Bases

Install these as follows:

1) Excavate a hole the size and depth shown on the Plans.

Remove and dispose of excavated material as directed by the Engineer.

2) Place the specified type and size anchor bolts according to the pole manufacturer's recommendations. Hold these securely by a template to ensure proper position in the completed foundation.

NOTE: Never attempt to realign the anchor bolts after pouring the foundation.

3) Place conduits in foundations, orient them to accommodate service cables, and securely hold them to avoid displacement.
4) Pour Class A concrete into the excavated area to the following depths:
   a) First pour against undisturbed earth up to 4 in (100 mm) below the finished ground line.
   b) Then, using an approved form, continue to pour to the finished top of the foundation elevation, as specified.
5) Chamfer the top and formed portions of the foundation edges.
6) Give a Type III finish to all portions of the foundation above finished grade down to at least 2 in (50 mm) below finished grade, according to Subsection 500.3.05.AB.4, "Type III—Special Surface Coating Finish."
7) Where break-away bases are required, do not allow any portion of the base or anchor bolts to protrude more than 4 in (100 mm) above the ground line.

b. Tower Foundations and Pole Foundations on Structures

Construct these according to Plan details.

Where break-away bases are required, do not allow any portion of the base or anchor bolts to protrude more than 4 in (100 mm) above the ground line.

c. Foundations for Prestressed Concrete-Butt Base Standards

Excavate for prestressed concrete butt base lighting standard foundations either manually or mechanically. When excavating:

1) Dig or drill holes to the depths and diameters shown on the Plans.
2) Place and compact 6 in (150 mm) of crushed stone in the bottom of the hole. Use crushed stone according to Subsection 800.2.01, with stone size 57.

2. Installing Light Standards and Towers on Foundations

Erect the standards or towers as recommended by the manufacturer and approved by the Engineer. Erect carefully to avoid marring the finish or damaging the standard.

Ground the lighting supports according to the Plans.

a. Installing Bolt-Down Base Standards with Anchor or Transformer Bases

After installing foundations according to Subsection 680.3.05.D.1, install lighting standards as follows:

1) When using bracket arm type, use metal shims or double nuts supplied with the poles to plumb the pole about its center axis.
2) When using the single arm type, unless otherwise specified, install the luminaire and hardware, then plumb the back side of the standard, providing a slight rake or lean away from the traveled way.

b. Installing Prestressed Concrete-Butt Base Standards

After installing foundations according to Subsection 680.3.05.D.1, install prestressed concrete-butt base standards as follows:

1) Position the pole in the center of the hole at grade and hold it in place, as follows.
   a) Set two bracket arm lighting standards to plumb.
   b) Rake single bracket arm lighting standards according to Subsection 680.3.05.D.2.a.(2).
2) Fill the space surrounding the pole butt base as follows:
   - Fill with crushed stone, applied in 6in (150mm) layers. Use crushed stone according to Subsection 800.2.01, with stone size 57.
   - Compact each layer with mechanical tamping equipment.
   - Moisten the stone backfill as necessary.
   - Fill the area to the bottom edge of the cable entrance in the butt base.
3) Install the cable.
4) Continue to fill and compact the area with 6in (150 mm) layers of crushed stone to 12 in (300 mm) below grade.

5) Backfill the remaining 12 in (300 mm) with soil in 2 equal layers, thoroughly compacting each layer.

3. Installing Frangible or Break-Away Standards

   Ensure that frangible or break-away lighting standards meet the breakaway requirements according to Plan details and AASHTO Standard Specifications for Structural Supports for Highway Signs, Luminaires, and Traffic Signals.

E. Bridge Lighting Installations

When installing lighting on a bridge, examine the bridge plans or the completed structure, whichever applies, to determine the proposed or existing details that affect the lighting standards. Do this before ordering the standards.

Immediately report to the Engineer discrepancies between the highway lighting Plans, the existing bridge structure, or the proposed bridge Plans so that these differences can be reconciled.

F. Bracket Arms

Install the specified type, design, kind, dimensions, and number of bracket arms on the lighting standards according to the Plans.

G. Luminaires

Mount or install the specified design and size of luminaire shown on the Plans. Level according to the manufacturer's recommendations and Plan details, and as approved by the Engineer.

1. Position the Luminaires

   Position luminaires to illuminate the roadway as follows:

   a. Provide glare shields on luminaires if required by the Plans.
   b. Where a lighting unit illuminates a roadway portion on a grade, rotate the luminaire on its major axis to bring the minor axis parallel to the roadway.

2. Install Pole and Bracket Cable

   Install the pole and bracket cable as follows:

   a. Clamp cables into the proper terminals on the luminaire's terminal board.
   b. Splice cables to the proper phase and neutral conductors outside the handhole in the pole base.
   c. Ensure that cables contain specified size and type in-the-line fuses and waterproof holders within each phase conductor.
   d. Leave enough slack in cables to check or replace the fuse outside of the handhole.

3. Finish the Installation

   a. After making the required circuit splices outside the handhole, place wires inside the handhole.
   b. Leave slack in cables for future maintenance.
   c. Attach a suitable identification tag to each phase cable, using white for the neutral grounding wire.
   d. Clean the light control surfaces and glassware after installation. Clean according to the luminaire manufacturer's recommendations.

H. Miscellaneous Electrical Items

Install the following according to Plan details:

Ground rods, fuses, arresters, circuit breakers, disconnect switches, photoelectric controls, magnetic contactors, assemblies, related components, and incidental hardware.

Consider these Items to be incidental to the lighting system and include their cost in the Contract Price for other Items.

I. Power Source

Make prior arrangements for furnishing power to operate the lighting system. Notify the power company at least 30 days before needing to connect to the power source.

Connect the lighting system to the secondaries of the local power supplier's overhead or underground distribution system at the locations indicated on the Plans.

Unless otherwise specified, install the service pole, metallic conduit riser, weatherproof circuit breaker, and weatherhead with enough wire to connect to the power source.

J. Field Painting

After erecting nongalvanized steel standards, thoroughly clean and touch up the standards, as required, with 1B Orange or original type primer.

Apply remaining coats according to System V (Heavy Exposure) in Section 535, unless otherwise indicated on the Plans.

K. Seed and Sod Repair

If areas previously seeded or sodded are disturbed during this work, sprig, reseed (with mulch), or resod those areas according to Section 700.

L. Final Cleanup

Do final clean-up according to Subsection 104.07 as it applies. Before final inspection, touch up finishes, clean surfaces, and perform other tasks as directed by the Engineer to ensure the work's effectiveness and neat appearance.

680.3.06 Quality Acceptance

A. Field Painting

If the finish on galvanized steel material is scratched, chipped, or otherwise damaged, the material will be rejected. Repair the finish only with the Engineer's approval, according to Section 645.

B. Testing

Complete and energize each lighting circuit as early as practicable. Before beginning testing, provide an electrician, with a megger, a voltmeter, and an ammeter to perform the following tests.

Perform the tests in the presence of the Department's Inspector(s) for each lighting circuit. Make test data part of the project records.

1. Megger Reading

   Megger the circuit conductors to be certain that the phase conductors have no grounds before connecting them to the source breaker, sign structure, lighting standard wiring, or lightning arresters. Test as follows:

   a. Test 480-volt systems at 1,000 volts dc.
   b. Test systems under 480 volts at 500 volts dc.
   c. Apply the test voltage for 10 minutes.

   The minimum acceptable megger reading is one megohm.

2. Service Voltage

   Measure the service voltage as follows:

   a. Measure the service voltage between the phase conductors before turning the circuit breaker on at the service point. Also measure the service voltage between each phase conductor and the neutral or ground.
   b. After observing the proper voltage as indicated on the Plans, turn the circuit breaker on, wait 10 minutes for the luminaires to warm up, and repeat the voltage measurements.
   c. After the circuit has been energized for at least 10 minutes, measure the load current in each phase conductor and in the neutral at the service point. Ensure that the current in the phase conductors is balanced and that there is no current in the neutral.

C. Final Acceptance

Final Acceptance of the lighting system will be withheld for a 30-day testing period of continuous nightly automatic operation or until all other items have been accepted, whichever occurs later. The testing period begins after completion of the lighting work. The Contractor is responsible for energy costs during the testing period.

1. Test and Acceptance Time

   Begin the test period after one of the following, whichever occurs later:

   - Completion of the lighting work
   - Acceptance of all other items in the Contract (except grassing)

   Any portion of this test period that occurs after all other Work has been accepted will not be charged against the Contract time.

2. Correction of Defects

   Correct defects in material or workmanship at no expense to the Department if they occur during one of the following periods, whichever occurs later:

   - During the 30-day test period
   - Before the Project is accepted

   If defects are identified during the 30-day test, correct the defects, then continue the test for another 30 days. Run the test each time a defect is identified and corrected until achieving uninterrupted, continuous nightly automatic operation for 30 days.

3. Final Voltage Test

   After the testing period and at Final Acceptance, provide an electrician, a voltmeter, and an ammeter to perform this test as in Subsection 680.3.06.B.2, above. Perform the test in the presence of the Department's Inspector(s) for each lighting circuit. Make this test data part of project records.

680.3.07 Contractor Warranty and Maintenance

General Provisions 101 through 150.

680.4 Measurement

Highway lighting Items complete in place and accepted are measured as follows:

A. Lump Sum

When the Contract contains an Item for highway lighting on a Lump Sum basis, measurement is for the total of all Items installed.

B. Separate Items

When the Contract contains Items for separate elements of highway lighting, measurement for each Item is as follows:

1. Conduit

   Encased conduit, direct burial, and conduit on structures are measured by the linear foot (meter) for the type and size installed.

2. Accessory Items

   a. Electrical junction boxes are measured by the unit, complete, in place for all types unless separated by type on the Plans.

   b. Pull boxes, ground rods, fuses, arresters, circuit breakers, disconnect switches, photoelectric controls, and magnetic contractors are not measured for payment separately, but are included in the overall cost of the lighting installation.

3. Cable

   Cable is measured by the linear foot (meter) from center-to-center of pull boxes, light standards, etc., for each specified conductor type, number, and size.

No additional allowance is made for slack length, length inside equipment or standards, and similar instances where additional wire length is required.

Cable for lighting towers and the pole and bracket cable lighting standards is not measured separately for payment.

4. Lighting Standards and Towers

   Each lighting standard, with or without a base, or each lighting tower of the specified kind, design, and mounting height (M.H.) is measured by the unit, complete in place.

   Foundations for towers are measured separately.

   Appurtenances for lighting standards and towers are measured as follows:

   a. The service car of the specified type and design is measured by the unit, including the drive motor.
   b. Lowering device power supply units are not measured for payment separately unless shown on the Plans as a separate payment Item. Unless otherwise specified, furnish one power supply unit for each project.
   c. Foundations for lighting standards are not measured separately for payment.

      For lighting tower foundations, only the Class A concrete, reinforcement steel, and piling are measured according to applicable sections.

5. Luminaires

   Luminaires of the specified size, type, and design are measured per each by the unit.

6. Transformer Bases

   Transformer bases, if shown on the Plans as a separate Pay Item, are measured by the unit.

7. Service Pole Risers

   Service pole risers are measured by the unit, complete in place.

680.4.01 Limits

General Provisions 101 through 150.

680.5 Payment

Payment for highway lighting will be made as follows:

A. Lump Sum

When the Contract indicates that payment for highway lighting elements will be made on a Lump Sum basis, the Lump Sum payment is full compensation for materials, labor, equipment, and incidentals necessary to complete the Item according to Plan details.

B. Separate Items

When the Contract contains items for various highway lighting elements, payment will be made for each item as follows:

1. Conduit

   a. Encased conduit will be paid for at the Contract Unit Price per linear foot (meter) complete in place for each type installed.

      Payment is full compensation for excavating; required sheeting; backfilling; disposing of excess or unsuitable material; furnishing and placing materials; installing concrete, conduit, and reinforcement, when specified; installing bends, joints, fittings, and appurtenances; and installing encased conduit complete.
   b. Direct burial conduit will be paid for at the Contract Unit Price per linear foot (meter), complete in place. Payment is full compensation for all applicable work and materials noted under Subsection 680.5.B.1.a for required conduit jacking and bedding materials.
   c. Conduit on structures will be paid for at the Contract Unit Price per linear foot (meter), complete in place.

      Payment is full compensation for furnishing and installing all materials, including condulets, hangers, expansion fittings, grounding materials, associated hardware and accessories, and installation of conduit complete.

2. Accessory Items

a. Electrical junction boxes will be paid for at the Contract unit price per each.

b. Pull boxes, ground rods, fuses, arresters, circuit breakers, disconnect switches, photoelectric controls, and magnetic contactors will not be paid for separately. They will be included in the overall cost of the lighting installation.

3. Cable

Cable, including direct burial cable, will be paid for at the Contract Unit Price per linear foot (meter), complete in place.

Payment is full compensation for furnishing and installing the cable and ground materials; making splices, joints, and connections; trenching, furnishing and placing cushion and backfill material; and disposing of excess or unsuitable excavated material.

Cable for lighting towers and the pole and bracket cable for lighting standards will not be paid for separately, but will be considered as an integral part of the lighting tower or lighting standard.

4. Lighting Standards and Towers

Each light standard or lighting tower will be paid for at the Contract Unit Price per each.

Payment is full compensation for furnishing and installing the complete lighting standard or tower, including the bracket arm(s) or high mast luminaire support and lowering assembly, and associated hardware and connections; furnishing grounding material; furnishing backfill materials; backfilling; reshaping to proper contours; and repairing seeded or sodded areas.

Appurtenances for lighting standards and towers will be paid for as follows:

a. When lighting towers are designed for the use of a service car, normally one unit is required for each project and will be paid for at the Contract Unit Price per each. Payment is full compensation for furnishing the complete service car, including the drive motor and required accessories.

b. If specified as a separate payment Item, the power supply unit will be paid for at the Contract Unit Price per each. Payment is full compensation for furnishing the complete power supply unit, including transformer, if required, and required accessories.

c. Foundations for lighting standards are considered an integral part of the lighting standard and will not be paid for separately.

For lighting tower foundations only, the Class A concrete, reinforcement steel, and piling will be paid for separately according to the applicable sections.

5. Luminaires

Luminaires will be paid for at the Contract Unit Price per each. Payment is full compensation for furnishing and installing the complete luminaire. Installation includes ballast(s), lamp(s), glare shields where required, and associated hardware and wiring.

6. Transformer Bases

When shown on the Plans as a separate payment Item, transformer bases will be paid for by the Unit for each specific size shown on the Plans.

7. Service Pole Risers

These will be paid for at the Contract Unit Price per each. Payment is full compensation for furnishing and installing the complete service pole riser as shown on the Plans. Installation includes the wood pole, metallic conduit riser, weatherproof circuit breaker(s), weatherhead, enough wire to connect to the power source, and other required accessories.

Payment will be made under Sections 681, 682, and 683.

8. Seed and Sod Repair

Include the costs incurred in reseeding, resodding, and otherwise restoring the areas to their original condition in the Contract Price for other Items. These will not be paid for separately.

9. Energy Cost During Testing

The Contractor is responsible for the energy cost of each circuit or part of a circuit during the test period.

The cost of energy consumed after the successful completion of the 30-day test period will be borne by others.

Payment Items related to this section are described in the following sections:

Lighting standards and luminaires	Section 681
Electrical wire, cable, and conduit	Section 682
High level lighting systems	Section 683

680.5.01 Adjustments

General Provisions 101 through 150.

Section 681—Lighting Standards and Luminaires

681.1 General Description

This work includes furnishing and installing lighting standards and luminaires for roadway and highway structure lighting systems, either complete or as indicated on the Plans.

681.1.01 Definitions

General Provisions 101 through 150.

681.1.02 Related References

A. Standard Specifications

Section 680—Highway Lighting

Section 920—Lighting Standards and Towers

Section 921—Luminaires

B. Referenced Documents

General Provisions 101 through 150.

681.1.03 Submittals

Refer to Subsection 680.1.03.

681.2 Materials

Use materials that meet the requirements of Subsection 680.2 and the following:

Material	Specification
Lighting Standards and Towers	Section 920
Luminaires	Section 921

681.2.01 Delivery, Storage, and Handling

General Provisions 101 through 150.

681.3 Construction Requirements

681.3.01 Personnel

General Provisions 101 through 150.

681.3.02 Equipment

General Provisions 101 through 150.

681.3.03 Preparation

General Provisions 101 through 150.

681.3.04 Fabrication

General Provisions 101 through 150.

681.3.05 Construction

Perform construction according to Subsection 680.3.05.

681.3.06 Quality Acceptance

Refer to Subsection 680.3.06.

681.3.07 Contractor Warranty and Maintenance

General Provisions 101 through 150.

681.4 Measurement

Measurement and payment will conform to Subsection 680.4.

681.4.01 Limits

General Provisions 101 through 150.

681.5 Payment

Payment will be made under:

Item No. 681	Lighting standard—aluminum _____MH post top	Per each
Item No. 681	Lighting standard—aluminum _____MH _____arm	Per each
Item No. 681	Lighting standard—steel _____MH post top	Per each
Item No. 681	Lighting standard—steel _____MH _____arm	Per each
Item No. 681	Lighting standard—prestressed concrete _____MH post top	Per each
Item No. 681	Lighting standard—prestressed concrete_____ MH _____arm	Per each
Item No. 681	Lighting standard _____ MH post top	Per each
Item No. 681	Lighting standard_____ MH _____arm	Per each
Item No. 681	Transformer base—aluminum_____ in (mm)	Per each
Item No. 681	Luminaire (description)	Per each

681.5.01 Adjustments

General Provisions 101 through 150.

Section 682 - Electrical Wire, Cable, And Conduit

682.1 General Description

This work includes furnishing and installing wire, cable, and conduit for roadway and structure lighting systems, and for intelligent transportation systems (ITS) complete or as indicated on the Plans.

682.1.01 Definitions

Refer to General Provisions 101 through 150.

682.1.02 Related References

A. Standard Specifications

Section 205—Roadway Excavation

Section 208—Embankments

Section 615—Jacking or Boring Pipe

Section 647—Traffic Signal Installation

Section 680—Highway Lighting

Section 922—Electrical Wire and Cable

Section 923—Electrical Conduit

B. Referenced Documents

Refer to General Provisions 101 through 150.

National Electrical Manufacturers Association (NEMA) Standards Publication TC 6 and 8

American Society for Testing and Materials (ASTM) C857-95

ASTM D 149

ASTM D 570

ASTM D 792

ASTM-D 882

ASTM-D 2103

ASTM D 2105

ASTM-D 2261

ASTM-D 2582

ASTM D 2583

American Petroleum Institute (API) SPEC 15 LR

Federal Specification WC-1904-A

682.1.03 Submittals

A. Lighting

Refer to Subsection 680.1.03.

B. ITS

1. Use only products and materials that meet the requirements of these minimum specifications and are listed on the Department's Qualified Products List. Products appearing on the Qualified Products List (QPL) are exempt from normal submittal requirements. These products have been evaluated by the Office of Traffic Operations and have proven their capability of meeting the appropriate Georgia Department of Transportation Specification. Any of these products may be used without submitting catalogue cuts, sampling or pre-testing. The Contractor shall submit a letter to the Field Engineer, stating which QPL items they will use. The Field Engineer and/or department designee must ascertain that the construction item is the same material identified on the appropriate QPL and will acknowledge receipt of these items in the project diary or as required by the Construction manual.
2. Submit submittal data for all test procedures, and routine maintenance procedures required for these items within 60 calendar days after the Notice To Proceed and prior to any installation, unless noted otherwise in the Contract Documents.
3. Submit to the Engineer for approval, two (2) hard copies and one (1) electronic pdf copy of the manufacturer's operational documentation, service and maintenance documentation, and all other materials required within these Specifications.
4. Provide submittal data that is neat, legible, and orderly. Neatly organize each package of submittal data and separate by hardware item. Use the "Materials Certification Package Index and Transmittal Form", contained in Section 105.02 of the Special Provisions, for each pay item to document and list all material and components that are included in the submittal package. Any submittal data submitted without the index/transmittal form or that is incomplete will be rejected.
5. Submittal data shall include complete technical and performance specifications on all elements of the conduit system. Below is a sample listing of submittal data requirements by subsection.
6. For Subsection 682.2.02.A Conduit, Nonmetal, Type 2 - Power Service, submit materials submittal data for the conduit, fittings, pull boxes, and electrical service wire.
7. For Subsection 682.2.02.B Conduit, Nonmetal, Type 3, submit materials submittal data for conduit, couplings, and coupling procedures.
8. For Subsection 682.2.02.C Conduit, Fiberglass, submit materials submittal data for conduit, couplings and fittings, and coupling and fittings procedures.
9. For Subsection 682.2.02.D Conduit Duct Bank, submit materials submittal data for conduit, couplings, and coupling procedures.
10. For Subsection 682.2.02.E Flexible Fabric Innerduct. submit materials data for the innerduct, installation procedures, and maintenance procedures.
11. For Subsection 682.2.02.F Pull Tape, submit materials submittal data for pull tape and installation procedure.
12. For Subsection 682.2.02.G Duct Plugs, submit materials submittal data for duct plugs for empty conduit and duct plugs with cable installed.

13. For Subsection 682.2.02.H Conduit Detection Wire, submit materials submittal data for conduit detection wire and testing procedure.

14. For Subsection 682.2.02.I Electrical Communication Box, Type ___ submit materials submittal data for electrical communication box, ring and cover, conduit terminators, cable racks and hardware, sealant, and conduit alignment jigs or spacers.

15. For Subsection 682.3.05.B.11, Electrical Communication Box, Rehabilitation submit materials submittal data for cable racks and hardware.

16. For Subsection 682.3.05.B.13, Directional Boring, submit, for the Engineer's approval, a plan showing the proposed methods for the installation of the horizontal directional bore. The Engineer will review the proposed installation plan within 10 working days of receipt by the Department. No directional boring work will be allowed until the Contractor's submitted plan is approved by the Engineer. This plan shall include the following detail as a minimum:

    a. List of projects completed by the company performing the boring operation, environment of installation (urban work, river crossing, freeway), diameter of product installation and length of bores. This list of projects must include the name, address and phone number of an owner's representative with knowledge of the performance of the work. Provide at least five previously completed projects of similar scope as the boring work included in this contract.

    b. List of the Contractor's key personnel with a resume of boring experience. The Department will be the sole judge of the qualifications of the foreman and the drill operators.

    c. Location of all proposed boring entry and exit pits.

    d. Proposed alignment of bore both horizontal and vertical. The proposed alignment shall maintain a minimum clearance of 18 inches (450 mm) or 2 times the diameter of the final product installation, whichever is greater, at any obstruction. Boring will not be allowed in select backfill areas such as at mechanically stabilized wall locations.

    e. Proposed diameter of bore. This diameter is the diameter of the final product installation.

    f. Proposed diameter of pilot borehole.

    g. Proposed diameter of back reamer. In no case shall the diameter of the back reamer exceed 1.5 times the diameter of the final product installation.

    h. Proposed depth of cover. The depth of cover shall be equal to or greater than 10 times the diameter of the final product installation, or 18 inches whichever is greater. Additionally, the minimum depth of cover allowed in paved shoulders shall be 4 feet (1.22 meters). The minimum depth of cover outside of the paved shoulder shall be 4 feet (1.22 meters).

    i. Evaluation of soil conditions to be encountered. Full soil survey not required. As a minimum, excavate the entrance and exit pits for the proposed bore and determine the nature of the material likely to be encountered. The drilling fluid composition should be based on the evaluation of the materials encountered in the bore pit excavation.

    j. Proposed composition of drilling fluid.

    k. Proposed drilling fluid pressure and flow rates.

    l. Proposed drilling fluid management plan.

    m. Proposed pull back rate.

n. Type of tracking system.

C. As Built Drawings

Provide the Department with drawings that detail the final installation route of all cable. Show all routes and locations of the final cable installation in-place and complete. For aerial cable installations show poles, pole attachment heights, spans, co-locations, splice closures, maintenance/storage coils, and vertical risers. For underground cable installations show conduit size, quantity and routes, pull boxes and ECBs, closures, and cabinet terminations.

Except for standard bound materials, bind all 8.5”x11” documentation, including 11” x 17” drawings folded to 8.5”x11”, in logical groupings in loose-leaf binders of either the 3-ring or plastic slide-ring type. Permanently and appropriately label each such bound grouping of documentation.

Furnish at least five (5) copies of all bound documentation.

682.2 Materials

682.2.01 Lighting

Use materials that meet the requirements of Subsection 680.2 and the following:

Material	Specification
Electrical Wire and Cable	Section 922
Electrical Conduit	Section 923

682.2.02 ITS

All conduit products shall be installed, applied, inspected, and/or utilized in accordance with the Construction Section of these Standard Specifications.

All conduit shall be labeled with durable identification data which will provide traceability of the manufacturer, plant location, manufacture/date, date codes, shift, and machine of manufacturer, conduit size (inner diameter trade size and wall thickness/rating), and sequential foot marking. Line text height shall be at least ½ in. (10 mm). Text labeling shall occur a maximum of every 2 ft. (0.6 m). The text shall be indelibly printed in high contrast to the conduit. The text shall be oriented to face up for underground installation; the text shall be oriented to face down for under bridge installation.

The conduit shall also be labeled as shown below. This labeling shall occur a maximum of every 4 ft. (1.2 m).

Any additional wording on the conduit, such as “this side up” or “this side down”, shall be consistent with the installation orientation.

The spigot end of the duct shall have a circumferential insertion depth mark to insure that proper insertion depth is achieved. This mark is not required for spigots with threaded fittings.

A. Conduit, Nonmetal, Type 2 – Power Service

Conduit and fittings shall be Schedule 40 unplasticized PolyVinyl Chloride (PVC) that meets Federal Specification WC-1904-A.

B. Conduit, Nonmetal, Type 3

Conduit shall be manufactured from virgin high-density polyethylene (HDPE). Conduit shall be extruded from colored material for uniform full-thickness coloring. Where striping is required, a minimum of three colored longitudinal stripes of HDPE material shall be co-extruded on the conduit outer wall. The three stripes shall be equally spaced around the circumference and continuous for the entire length of conduit. Printed or embossed striping is not permitted.

Unless otherwise noted in the Contract Documents, color code for conduit used for Type 3 installation shall comply with the Conduit Duct Bank Color Code schedule listed on the plan detail sheet.

1. 1 in. (25 mm) Conduit shall conform to ASTM D-3035 and shall meet the following requirements:
   - Nominal outer diameter: 1.315 in. (33.40 mm)
   - Minimum inner diameter: 1.030 in. (26.16 mm)
   - Minimum wall thickness: 0.120 in. (3.05 mm)
2. 1¼ in. (32 mm) Conduit shall conform to ASTM D-3035 and shall meet the following requirements:
   - Nominal outer diameter: 1.660 in. (42.16 mm)
   - Minimum inner diameter: 1.313 in. (33.35 mm)
   - Minimum wall thickness: 0.151 in. (3.84 mm)
3. 1½ in. (38 mm) Conduit shall conform to ASTM D-3035 and shall meet the following requirements:
   - Nominal outer diameter: 1.900 in. (48.26 mm)
   - Minimum inner diameter: 1.506 in. (38.25 mm)
   - Minimum wall thickness: 0.173 in. (4.39 mm)
4. 2 in. (51 mm) Conduit shall conform to ASTM D-3035 and shall meet the following requirements:
   - Nominal outer diameter: 2.375 in. (60.32 mm)
   - Minimum inner diameter: 1.885 in. (47.88 mm)
   - Minimum wall thickness: 0.216 in. (5.49 mm)

C. Conduit, Fiberglass

Conduit shall be manufactured from fiberglass reinforced epoxy. The conduit shall be “bullet resistant”, capable of preventing the penetration of a 0.45 caliber slug fired from a distance of 20 ft. (6 m). The conduit shall conform to the following physical and mechanical properties when tested in accordance with the referenced specification. All accessories and fittings, including couplings and expansion joints, shall meet all the same “bullet resistant” requirements as the conduit. All conduit and fittings shall be black.

Physical and Mechanical Properties	Test Methods
Ultimate Tensile Strength - 11,000 PSI (75800 kPa) Min.	ASTM D 2105
Dielectric Strength - 500 Volts/Mil.	ASTM D 149
Water Absorption - 1% Max.	ASTM D 570
Specific Gravity - 1.9 - 2.0	ASTM D 792
Glass Content - 68 +- 2%	API SPEC 15 LR
Barcol Hardness - 58-52	ASTM D 2583

1. 2 in. (51 mm) Conduit shall meet the following requirements:

   Nominal outer diameter: 2.500 in. (tolerance +0.028”/-0.018”) [63.50 mm (tolerance +0.71/-0.46)]

   Minimum inner diameter: 2.000 in. (50.80 mm)

   Minimum wall thickness: 0.250 in. (6.35 mm)

2. 4 in. (102 mm) Conduit shall meet the following requirements:

   Nominal outer diameter: 4.500 in. (tolerance +0.034”/-0.028”) [114.3 mm (tolerance +0.86/-0.71)]

   Minimum inner diameter: 4.000 in. (101.6 mm)

   Minimum wall thickness: 0.250 in. (6.35 mm)

D. Conduit Duct Bank

Conduit in duct banks shall be manufactured from HDPE, and shall conform to the requirements in Section 682.2.02.C Conduit Duct Bank, Type 1 shall include six 1-¼" (32 mm) conduits and three 2" (51 mm) conduits. Conduit Duct Bank, Type 2 shall include eight 1-¼" (32 mm) conduits and three 2"(51 mm) conduits. Conduit Duct Bank, Type 3 shall include four 2"(51 mm) conduits. Conduit Duct Bank, Type Special shall be as shown in the Plans.

Where required in the Contract Documents, conduits shall be located and secured in the conduit duct bank by conduit spacers configured into an assembly that is appropriate for the duct bank type.

Conduit Spacer shall be steel or molded high impact polystyrene that is resistant to rot and moisture absorption. Spacers shall be manufactured to have an interlocking design such that spacers for different conduits can be assembled for the appropriate duct bank configuration. All spacers on the bottom of an assembly shall be “base” that includes a flat base with a minimum of 6 in2 (3900 mm2) of bearing area for each bottom conduit.

E. Flexible Fabric Innerduct

The flexible fabric innerduct shall be a woven sleeve containing single or multi-cell textile innerduct used to optimize allocation of cables within conduit structures. The flexible fabric innerduct shall have a solid copper, polyvinyl color coated conductor (19AWG minimum) for tracing and rated for a minimum of 6 amps and 600 volts. The flexible fabric innerduct shall contain a flat woven pull tape with a minimum of 1250 lb (567 kg) tensile strength. Sizes shall be 1¼ in. (32 mm), 2 in. (51 mm), 3 in. (81.5 mm), and 4 in. (102 mm), or as specified in the plans.

F. Couplings and Fittings

Coupling shall be by epoxy adhesive interference joint with bell and spigot or stop coupling fittings only. Couplings shall be airtight and watertight. All couplings shall be installed in

accordance with the conduit and the coupling manufacturer’s recommendations. Only couplings of the same type of fiberglass as specified above are permitted.

Fixed bends and sweeps shall be used; no flexible bends are permitted. Bends and sweeps shall be compatible with the coupling requirements above. Bends and sweeps shall be of consistent radius and inner diameter, with a minimum radius of 10 times the inner diameter. In no case shall bends exceed a 90 degree direction change.

G. Pull Tape

1. Pull tape shall be detectable, and shall consist of a single 24 AWG copper wire with polyethylene or PVC jacket woven into a polyester tape . The tape shall have the following properties:

   a. 1250 lbs. (567 kg) tensile strength

   b. flat, not round, construction

   c. printed foot markings

   d. pre-lubricated for reduced pulling tension at start of cable pull

   e. low susceptibility to absorption of moisture; moisture resistant

   f. corrosion resistant embedded conductor

H. Duct Plugs

Install blank duct plugs in each empty conduit that enters an ECB, pull box, hub, or building entrance. The plug shall be sized to fit the conduit in which it is used and shall provide a

watertight and airtight seal by use of mechanical expansion. No sealants or caulks shall be used. The duct plug shall have inner rings to which pull tape can be tied. All metallic components shall be stainless steel.

Install a fiber optic inner duct plug in each conduit that enters an ECB, pull box, hub, or building entrance and has a cable installed in it. The plug shall be sized to fit the conduit and cable

with which it is used and shall be a split plug with a bushing assembly for sealing around the cable by mechanical compression. All metallic components shall be stainless steel.

I. Conduit Detection Wire

Conduit detection wire shall be #10 AWG stranded green-insulated THWN or THHN-THWN conductor.

J. Electrical Communication Box

Design electrical communication box and cover in accordance with ASTM C-857-95. Ensure that the walls, floor, and roof be minimum 6 in. thicknesses.

682.2.03 Delivery, Storage and Handling

Refer to General Provisions 101 through 150.

682.3 Construction Requirements

682.3.01 Personnel

A. Lighting

Refer to Subsection 680.3.01.

B. ITS

Refer to Subsection 680.3.01, except the installation of conduit for fiber optic cable shall not require the presence of a qualified electrician on the job site.

682.3.02 Equipment

Refer to General Provisions 101 through 150.

682.3.03 Preparation

Refer to General Provisions 101 through 150.

682.3.04 Fabrication

A. Lighting

Refer to General Provisions 101 through 150.

B. ITS

Refer to General Provisions 101 through 150.

1. Electrical Communication Box

    a. Form electrical communication box from 4500 psi concrete in accordance with Section 830. Manufacture and install the electrical communication box in accordance with Details which include the dimensions associated

with each type of electrical communication box. Seal all joints and seams in the electrical communication boxes created from manufacture or final assembly with manufacturer-approved sealant.

b. Form electrical communication box with one (1) knockout window and three (3) conduit terminators for conduit, nonmetal, type 3, 2 in. on each wall of the electrical communication box as shown in the Details. The knockout window shall remain sealed unless used for conduit duct bank termination. Provide 1 in. to 1.5 in. separation between conduit terminators. Install conduit into terminators as shown in Plans and seal with manufacturer-approved sealant.

c. Install two (2) cable racks, minimum 54 in. in length, on each wall of the electrical communication box as shown in the Details. Install cable racks directly to the wall or use the shortest standoff bracket possible. Include cable support arms, 7 in. to 9 in. in length, with plastic or ceramic insulators with each rack. Install one (1) cable support arm per rack for each cable installed plus one (1) cable support arm per rack as spare. Manufacture all cable racks, cable support arms, and mounting/fastening hardware of hot-dipped galvanized steel.

682.3.05 Construction

A. Lighting

Perform construction according to Subsection 680.3.05.

B. ITS

1. Perform construction according to Subsection 680.3.05.
2. Electrical Power Service Assembly

   a. Furnish and install electrical cables, conduit and power service necessary to make the system fully operational.

   b. Electrical Cables

   - Furnish and install electrical cables for providing electrical power service to the site and for providing telephone and/or /DSL service and/or cable service from the telephone company demarcation point to the equipment cabinet.
   - Furnish and install electrical cables used for power service, including grounding, in accordance with the Standard Specifications for electrical, lighting and traffic signal equipment.
   - Furnish and install electrical cables used for power supply as shown in the Detail Drawings. Do not splice any cable, shield or conductor used for power supply. Identify all conductors of all cables by color and number. Identify the conductor function in as-built documentation included in the cabinet documentation.
   - Electrical cables installed for telephone service from the telephone company demarcation point to the equipment cabinet shall be minimum #22 AWG twisted pair, UV-resistant shielded cable rated for wet/dry direct burial use. Install telephone service cable directly to or into the equipment cabinet in accordance with telephone company procedures. Install telephone service cable from the telephone company demarcation point to the equipment cabinet. Unless otherwise shown in the Plans or directed by the Engineer, install the telephone cable underground in conduit of minimum 1 in. (25 mm) diameter. Make all necessary connections at the telephone interface box and inside the equipment cabinet for proper operation of the video, control signaling and communications signaling. Neatly coil a minimum of 2 ft. (0.6 m) of telephone service cable in the bottom of the cabinet.

   c. Electrical Conduit

   - Install electrical conduit to provide enclosures for electrical cables at or terminating at the site. Furnish and install electrical conduit in accordance with the Standard Specifications for electrical, lighting and traffic signal equipment, and as required below.
   - Make all above ground electrical conduit and conduit bodies rigid metal except as noted below. Terminate all aboveground conduit in either a weather head or in a cabinet. All conduits entering a pole-mounted

equipment cabinet shall enter through the bottom with at least one conduit body with a sealable, removable cover for pulling access. All conduits entering in a base-mounted cabinet shall enter through the foundation and the base-mount adapter.

- Install electrical conduits for electrical power service drops to the cabinet in the diameter indicated in the Plans. Conduits used as risers from a cabinet shall be minimum 2 in. (50 mm) diameter. Make nipples, welded collars, conduit bodies (e.g., LB condulets) and weather heads in hollow metal or concrete poles at the device mounting locations and at the cabinet mounting locations a minimum 2.5 in. (63 mm) diameter.

d. Electrical Power Service

- Furnish and install materials and equipment to bring electrical power service to the cabinet from the source shown in the Plans. Furnish and install electrical power service in accordance with the Standard Specifications for electrical, lighting and traffic signal equipment, and as required below.
- Provide and terminate electrical power service equipment at the power service source as shown in the Plans. If the power service source is shown as a new power service drop, then furnish and install an electrical power service assembly at the new service drop location in accordance with the Standard Specifications. Include, as a minimum, with the electrical power service equipment at a new drop a service disconnect, surge arrestor, grounding electrode and conductor, and all necessary conduit, wiring and hardware. Provide a ground conductor, other than the electrical service conduit, between the electrical service disconnect ground buss and the equipment cabinet service entrance terminal block SE. Furnish and install a service metering base where required by the local utility or electrical codes or where shown in the Plans. Include a minimum 30 ampere circuit breaker with electrical service disconnects. Mount the electrical surge arrestor on the disconnect housing. The arrestor shall be rated for a maximum permissible line to ground voltage of 175RMS, and shall be in conformance with NEMA standards for surge arrestors. Electrical service conduit shall be minimum 2 in. (25 mm) diameter. Separate electrical service conduit from all other conduit. This conduit cannot contain any other wiring. Dedicate electrical service conduit from the electric utility drop point through the meter base and disconnect and to the cabinet, where the electrical service conduit shall enter the cabinet through the cabinet bottom.
- If the power service source is an existing service drop, then furnish and install the necessary materials and equipment to supply service to the cabinet from the existing service drop. Unless otherwise shown in the Plans, service the cabinet from a dedicated branch circuit with circuit breaker. Make all electrical service installation from the existing drop point as specified for new power service drops above.
- Furnish and install surge suppression at all electrical power service sources. Ground all electrical power service sources and bond the AC neutral and ground at the power service source only.
- The contractor will establish accounts with the appropriate utility provider. After all accounts are established, the contractor will submit the utility transfer form to the appropriate DOT Utility office through the Engineer for transfer. The Engineer will provide the utility transfer form to the contractor.

3. Conduit, Nonmetal, Type 2 – Power Service

a. Install conduit as indicated in the Plans. If the conduit is shown in the plans crossing under pavement, that portion of the conduit shall be replaced with Conduit Nonmetal, Type 3. Install the Conduit Nonmetal, Type 3 via the directional bore method in accordance with Subsection 682.3.05.B.13 and Construction Details.

b. Install Type 2 pull boxes if in unpaved shoulder, or concrete ground mounted electrical junction boxes if in pavement along the conduit route between the electrical service pole and the equipment cabinet requiring power. Install the pull boxes as described in Section 647 and in Details that meet requirements in Section 925, except that the covers should be furnished with the logo “ELECTRICAL”. Make any repairs to pavement required as a result of the installation of electrical junction boxes in accordance with Department standards. Within the conduit and pull boxes, install electrical service wire that meets requirements in Section 922. Install any transformers as may be required because of voltage drops between the electrical service pole and the equipment cabinet requiring power.

4. Conduit, Nonmetal, Type 3

   a. Whenever possible, conduits shall be placed in continuous manufactured lengths without coupling.

   b. Conduit shall be placed in the straightest orientation possible, reducing bends, rises, and waves. Conduits shall be held in place during backfilling when necessary to keep straight. Where field conditions require the trench to change direction and bends are necessary, the bends shall be formed in the trench and should be smooth and gentle and shall not have less than a 4 foot radius (as measured to the inside surface of the conduit)

   c. Coupling

      - Make every effort to minimize coupling. Coupling shall only be permitted with the advance permission of the Engineer.
      - Couplings shall be airtight and watertight. All couplings shall be installed in accordance with the conduit and the coupling manufacturer's recommendations. Only couplings of the type specified below and approved by the conduit manufacturer are permitted.
      - Couplings shall be accomplished only by hydraulic press-on or electro-fusion coupling methods. Use hydraulic press-on couplings of seamless tool-grade tubular aluminum with sealing barbs and center stop. Use hydraulic compression duct coupling tools and follow all manufacturer's installation procedures, fully inserting both conduit sections to the coupling center stop. Use pre-fabricated electro-fusion couplings that are field-installed using the coupling manufacturer's recommended automatic self-monitoring fusing machine and installation procedures. Do not use any other coupling methods.

   d. Termination

      Type 3 conduits shall be terminated in pull boxes in accordance with Section 647 and the Standard Details of the Contract Documents. Unless otherwise shown in the Plans, terminate Type 3 conduits in different types of underground spaces as follows:

      - Type 3 conduits shall be terminated in electrical communications boxes (ECBs) and Types 6 and 7 pull boxes using factory-installed terminators in the ECB or pull box. Only conduit adhesive sealants recommended by the terminator and conduit manufacturers shall be used.
      - Type 3 conduits shall be terminated in Types 1, 2, 3, 4S and 5S pull boxes bonded to a PVC sweep through the open bottom.
      - Type 3 conduits shall be terminated in Types 4 and 5 pull boxes directly through cored holes in the side walls in accordance with Section 647.

5. Conduit, Fiberglass

   a. Bridge or Structure-attached Conduit

      - Where the fiberglass conduit is specified in the Plans and/or by the Engineer to be attached to a bridge or other structure, bridge hanger assemblies, expansion joints, deflection fittings, and conduit support devices are required and shall be designed for application to the specific bridge or structure for which they will be used. The Department shall approve all materials and design of bridge-attached conduit systems prior to any field installation. All bridge hanger assembly components that are in contact with the conduit's outer surface shall be manufactured of the same fiberglass reinforced epoxy material or shall employ low-friction roller bushings.

   b. Termination

      - Fiberglass conduits shall be terminated in ECBs using factory-installed terminators in the ECB or by grouting and setting in a knockout window as shown in the Standard Details of the Contract Documents. Adhesive sealants recommended by the terminator and conduit manufacturers shall be used.

6. Conduit Duct Bank

   Install Conduit Duct Banks by configuring individual conduits into a continuous duct bank from termination point to termination point as shown in the Standard Details and other Contract Documents.

a. Coupling

- Make every effort to minimize coupling. Coupling shall only be permitted with the advance permission of the Engineer.
- Couplings shall be airtight and watertight. All couplings shall be installed in accordance with the conduit and the coupling manufacturer's recommendations. Only couplings of the type specified below and approved by the conduit manufacturer are permitted.
- Couplings shall be accomplished only by hydraulic press-on or electro-fusion coupling methods. Use hydraulic press-on couplings of seamless tool-grade tubular aluminum with sealing barbs and center stop. Use hydraulic compression duct coupling tools and follow all manufacturer's installation procedures, fully inserting both conduit sections to the coupling center stop. Use pre-fabricated electro-fusion couplings that are field-installed using the coupling manufacturer's recommended automatic self-monitoring fusing machine and installation procedures. Do not use any other coupling methods.

b. Termination

- Conduit duct banks shall be terminated in electrical communications boxes (ECBs) and pull boxes as shown in the Standard Details of the Contract Documents and in accordance with Section 647. Duct banks terminated in ECBs shall be installed into factory-installed knockout windows only, which shall be fully grouted and sealed around all conduits and to the full thickness of the box wall. Duct banks terminated in pull boxes shall be installed into factory-installed conduit terminators; conduit adhesive sealants recommended by the terminator and conduit manufacturers shall be used.

7. Flexible Fabric Innerduct

Secure from the manufacturer or supplier of the flexible fiber innerduct, and provide to the Department complete and comprehensive written installation manuals. At any time during the construction process, ensure that the manufacturer or supplier provides technical assistance to the Contractor and/or the Department.

8. Pull Tape

Install pull tape, by hand pulling, blowing, or via vacuum method, into each empty conduit during conduit installation. Install the pull tape after conduit testing has been completed. Install and secure 5 ft (1.5 m) of slacked pull tape in each empty conduit or cell at each vault. Secure the pull tape by tying it to the duct plug for the conduit in which it is installed.

9. Conduit Detection Wire

Install one conduit detection wire in the trench during conduit installation, directly below the conduit or at the same level as the conduit. All conduit installed by use of directional boring shall include the installation of a conduit detection wire. The conduit detection wire shall be pulled with or in the bored conduit. If more than one conduit is being installed in a single bore, only one conduit detection wire shall be required.

When conduit detection wire installation is required in existing conduit, install one conduit detection wire in the existing conduit or in one of the existing innerducts.

The conduit detection wire shall be continuous and unspliced between pull boxes or vaults and shall enter the pull boxes or vaults at the same location as the conduit with which it is installed. Coil and secure 5 ft (1.5 m) of conduit detection wire in each pull box or vault.

10. Electrical Communication Box

Install electrical communication box on a 12 in. layer of compacted coarse aggregate. Terminate conduit duct banks as shown in the Details. Prior to grouting, compact backfill for the entire length of trench to within 10 ft. of the electrical communication box. Bundle conduit, as shown on conduit duct bank installation Details, with cable ties, wire, or duct tape. Secure and align individual conduits of conduit duct bank with conduit alignment jigs, ensuring that the conduits enter the electrical communication box level, straight, and perpendicular to the wall. Construct conduit alignment jigs of plywood or use conduit spacers in accordance with Section 682. Allow grout around individual conduits of conduit duct bank to set prior to final backfilling and paving around the electrical

communication box. Do not use concrete for any backfill around the electrical communication box or the conduit approaches to the electrical communication box within 10 ft.

Install electrical communication boxes in the shoulder lane whenever possible, unless shown otherwise in the Plans. In the case of narrow shoulder lanes where the electrical communication box extends beyond the edge of pavement, backfill to the top of the electrical communication box. Never install any portion of the electrical communication box in the travel lane.

11. Electrical Communication Box Rehabilitation

    a. Establish the location of the electrical communication box, recognizing that pavement may have been placed over the cover of the electrical communication box.

    b. Open the cover of the electrical communication box which may include the use of power tools to accomplish and the removal of pavement.

    c. Remove existing fiber optic cable coils temporarily ensuring no kinks or abrasions are made to the fiber optic cable.

    d. Clean the interior of the electrical communication box and remove any debris, trash, mud, silt, and water.

    e. Reseal all joints and seams in the electrical communication box with silicone sealant, type A as specified in Section 833.2.06.

    f. Install two (2) cable racks per wall for inside wall widths greater than or equal to 36 in. Install one (1) rack per wall for inside wall widths less than 36 in. but greater or equal to 24 in. Install no racks for inside wall widths less than 24 in. Cable rack height shall be equal to inside height of the electrical communication box minus 6 in. Install cable racks such that the bottom of the cable rack is no greater than 3 in. from the bottom of the electrical communication box. Install cable racks such that the distance between successive racks and the electrical communication box corners is equal to the extent permitted by the presence of knockout windows and/or conduit terminators. Install cable racks directly to the wall or use the shortest standoff bracket possible. Include cable support arms, 7 in. to 9 in. in length, with plastic or ceramic insulators with each rack. Install one (1) cable support arm per rack for each cable previously installed or being installed as part of the project plus one (1) cable support arm per rack as spare. Manufacture all cable racks, cable support arms, and mounting/fastening hardware of hot-dipped galvanized steel.

    g. Re-set the electrical communication box and cover assembly such that the cover is at the elevation of the paved shoulder lane. Install class A concrete HES and 2 in. of 12.5 mm superpave or concrete surface to match existing paved shoulder.

    h. Label any unlabeled fiber optic cables in accordance with labeling requirements set forth in Section 935.

    i. If a suitable unused conduit terminator does not exist and a conduit is being terminated into an existing electrical communication box, neatly core conduit entry hole in electrical communication box wall and seal around conduit with silicone sealant or grout as necessary to prevent soil and/or water intrusion into the electrical communication box.

12. Jacking Conduit

    Refer to the requirements of Section 615.

13. Directional Boring Conduit

    Suitable pits or trenches shall be excavated for the boring operation and for placing end joints or termination connectors of conduit when required. Pits or trenches shall be securely sheeted and braced where necessary to prevent caving.

Where directional boring is required under railroads, highways, streets or other facilities, construction shall be done in the manner that will not interfere with the operation of the facility, and shall not weaken the roadbed or structure. No roadway pavement, subgrade, roadbed, paved shoulder, or unpaved median shall be disturbed or excavated as part of the boring or pipe placing operation for any reason without written authorization by the Engineer. In the above areas, any broken or damaged boring rod/stem, boring head (including transmitter/transponder locating heads and cutter heads), couplings (including backreaming, swivel or connector couplings), or any other material that cannot be retrieved as part of the pullback operation shall become the property of the Department and shall be abandoned in place unless otherwise authorized in writing by the Engineer. There shall be no additional payment for abandoned material.

Continuously monitor the location and alignment of the pilot drill progress to insure compliance with the proposed installation alignment and to verify depth of the bore. Monitoring shall be accomplished by manual plotting based on location and depth readings provided by the locating/tracking system or by computer generated bore logs which map the bore path based on information provided by the locating/tracking system. Readings or plots shall be obtained on every drill rod and provided to the Engineer on a daily basis for as-builts.

Monitoring of the drilling fluids such as the pumping rate, pressures, viscosity and density during the pilot bore, back reaming, and/or pipe installation stages shall be undertaken to ensure adequate removal of soil cuttings and to ensure that the stability of the borehole is maintained. Drilling fluid pressures should not exceed that which can be supported by the overburden (soil) pressure to prevent heaving or a hydraulic fracture of the soils. Excess drilling fluids shall be contained at the entry and exit points until recycled or removed from the site. Ensure that all drilling fluids are disposed of in a manner acceptable to the appropriate local, state and federal regulations. The Contractor's work will be immediately suspended whenever drilling fluids seep to the surface other than in the boring entrance or exit pit. The Contractor must propose a method to prevent further seepage and must remove and dispose of any drilling fluid on the surface prior to resuming the boring operation.

To minimize heaving during pullback, the pullback rate should be determined to maximize the removal of soil cuttings and minimize compaction of the ground surrounding the borehole. The pullback rate shall also minimize over cutting of the borehole during the back reaming operation to ensure that excessive voids are not created resulting in post installation settlement. Any surfaces damaged by the work shall be restored to their preconstruction conditions. All costs associated with the restoration are to be borne by the Contractor.

The distance that the excavation extends beyond the end of the bore will depend upon the character of the excavated material, but shall not exceed 2 feet (0.61 meters) in any case. This distance shall be decreased on instructions from the Engineer if the character of the material being excavated makes it desirable.

Once the directional boring is begun, the operation shall be carried on without interruption, insofar as practical.

The pits or trenches excavated to facilitate boring operations shall be backfilled immediately after the boring has been completed.

The boring shall proceed from a surface staging area provided for the boring equipment and workers. The location of the staging area shall be approved by the Engineer. The holes shall be bored mechanically. Excavated material will be placed near the top of the working pit and disposed of as required. The use of water or other fluids in connection with the boring operation will be permitted only to the extent necessary to lubricate cutting. Jetting will not be permitted.

Excavation will not be paid for separately, but all of the provisions of Section 205 and 208 shall govern.

In unconsolidated soil formations a gel-forming colloidal drilling fluid consisting of at least 10% high grade carefully processed bentonite may be used to consolidate excavated material, seal the walls of the hole, and furnish lubrication for subsequent removal of material and immediate backreaming/installation of conduit. Flow pressure on the drilling fluid shall be continuously monitored and maintained at the minimal pressure required to place the fluid. At no time shall the flow pressure exceed 500 psi (3448 k Pa) and should normally not exceed 200 psi (1379 k Pa). All drilling fluid spoils shall be completely removed from both ends of the bore and properly disposed of at a location provided by the Contractor.

Allowable variation from line and grade established by the Engineer shall be a maximum of 2 percent. Any voids which develop during the installation operation and are determined by the Engineer to be detrimental to the Work, shall be pressure grouted with an approved mix.

Directional boring operations inherently include the risk of encountering under grade obstructions that begin to alter the bore direction. Should an obstruction be encountered, the Engineer shall be notified immediately. Attempts at corrective measures to restore the proper bore alignment should include but are not limited to boring deeper or shallower (if minimum pipe depth can be maintained), moving the boring head to the right or left of the obstruction, or attempt to bore through the obstruction (if other than solid rock). To restore the bore alignment, a minimum of three attempts shall be made to the Engineer's satisfaction at each encountered obstruction with different corrective measures. If a suitable bore alignment cannot be restored, the Engineer may authorize a relocation of the bore. Unsuccessful boring attempts shall be paid in accordance with Sections 682.4 and 682.5 below, using the obstruction location as one end of the measured length of directional boring.

682.3.06 Quality Acceptance / Testing

A. Lighting

Refer to Subsection 680.3.06.

B. ITS

Refer to Subsection 680.3.06.

1. Conduit

   Test every conduit after the conduit is installed and before cable or pull tape is installed. Perform testing on all conduit types in this Specification, including but not limited to each conduit in duct banks, and each innerduct. All testing shall be performed using the procedures and mandrel size recommended by the conduit manufacturer. Testing shall be performed in the presence of the Engineer. Payment for all testing is included in the cost of the conduit.

2. Conduit Detection Wire

   Perform a continuity or tone test after installation to confirm that a continuous run of conduit detection wire was installed between pull boxes or vaults. For conduit detection wire installed in a trench, test the conduit detection wire after backfilling, compaction, and ECB installation is complete. For conduit detection wire installed in a trench with full-depth conduit backfill, test the conduit detection wire before and after backfilling. The purpose of this test is to document that no damage or separation of the conduit detection wire has occurred during the installation of wire, backfilling of the trench, or ECB installation.

   Prepare a test plan, supplying equipment, conducting the test and documenting the results. Submit a test plan at least 15 working days prior to the desired testing date. Testing shall not begin until the Engineer has approved the test plan, and all tests shall be conducted in the presence of the Engineer.

682.3.07 Contractor Warranty and Maintenance

A. Lighting

See Subsection 680.1.03.C, "Manufacturer's Guarantees"

B. ITS

Provide a one year manufacturer support (usual and customary warranties) period for all electrical wire, cable and conduit materials furnished and installed as part of the ITS system. Include in warranty and support all contractor or manufacturer activities related to maintenance, removal and replacement of electrical wire, cable and conduit materials during the period of support. Begin the Manufacturer warranty support period upon successful completion of acceptance testing as outlined in Subsection of 682.3.06. All Manufacturer warranties shall be continuous throughout the period and state that they are subject to transfer to the Department.

682.4 Measurement

682.4.01 Lighting

Measurement will conform to Subsection 680.4.

682.4.02 ITS

Flexible fabric innerduct, conduit duct bank, fiberglass conduit, and conduit will be measured for payment by the type and size actually installed per linear foot., complete, functional, and accepted. Unless otherwise specified in the Plans, all costs for materials, cutting asphalt or concrete, trenching, installing, backfilling trench, restoring asphalt or concrete, drilling existing concrete shoulder, installing #4 rebar, replacement of existing transverse joint material, directional boring, and testing of flexible fabric innerduct, conduit duct bank, conduit, fiberglass conduit, pull tape, duct plugs, and conduit detection wire shall be included in the overall cost of the flexible fabric innerduct, conduit duct bank, fiberglass conduit, and conduit.

Conduit detection wire installed in existing conduit will be measured for payment by the amount actually installed per linear foot, complete, functional, and accepted. Payment for installing Conduit Detection Wire in existing conduit will be paid for at the Contract unit price per linear foot or linear meter. Such payment will be full compensation for furnishing, installing, and testing the wire.

Electrical power service assemblies are measured for payment by the number actually installed per each, complete, functional, and accepted. For each assembly installed, furnish all required items, including but not limited to conduit; riser; wiring; hardware; disconnect; meter base; meter and Class 3, 30 ft. (9 m) timber pole at no separate cost to the Department. Exceptions to the previous sentence include horizontal conduit, wiring, Type 2 pull boxes, electrical junction boxes, and directional bores between the electrical service pole to the equipment cabinet requiring power service which will be measured for payment as conduit, nonmetal, type 2 – power service.

Conduit, nonmetal, Type 2 – Power Service will be measured for payment by the horizontal distance actually installed. No separate measurement will be made for Type 2 pull boxes, electrical junction boxes, electrical wire, directional bores, transformers, pavement repair, or any other required materials. All cost for materials required for providing electrical power from the electrical service pole to the equipment cabinet shall be included in the overall cost of conduit, nonmetal, Type 2 – Power Service.

Electrical communication box, type ____ will be measured for payment by the number actually installed, complete, functional, and accepted. No separate measurement will be made for, cable racks, cable support arms, compacted backfill material, compacted coarse aggregate, pavement removal, or pavement installation.

Electrical communication box rehabilitation will be measured for payment by the electrical communication box that was rehabilitated as previously defined. No separate measurement will be made for cable racks, cable support arms, pavement removal, or pavement installation.

Directional bores will be measured by the horizontal linear foot (meter) of bore complete in place. The measurement for payment shall be determined by obtaining measurements from the points at which the bore arrives at the required minimum acceptable depth, at the entrance and exit of the boring operation, following the central axis of the bore. Directional boring above the minimum acceptable depth shall not be measured for payment.

682.4.03 Limits

Refer to General Provisions 101 through 150.

682.5 Payment

Payment will be made under:

Item No. 682	Cable, type___. AWG No.___	Per linear foot (meter)
Item No. 682	Multi-conductor cable, type___ (No. of each size and AWG No.)	Per linear foot (meter)
Item No. 682	Conduit-rigid (size)	Per linear foot (meter)
Item No. 682	Conduit, Nonmetal, type (size)	Per linear foot (meter)
Item No. 682	Conduit, Nonmetal, type 2 – Power Service (Size)	Per Linear Foot (Meter)
Item No. 682	Conduit-encased, type (size) —(No. of ways)	Per linear foot (meter)

Item No. 682	Conduit-flexible (size)	Per linear foot (meter)
Item No. 682	Conduit, fiberglass (size)	Per linear foot (meter)
Item No. 682	Flexible Fabric Innerduct (size)	Per linear foot (meter)
Item No. 682	Conduit duct bank, Type _	Per linear foot (meter)
Item No. 682	Conduit Detection Wire	Per linear foot (meter)
Item No. 682	Service pole riser	Per each
Item No. 682	Electrical communication box, type	Per each
Item No. 682	Electrical communication box rehabilitation	Per each
Item No. 682	Electrical Power Service Assembly (Type)	Per Each
Item No. 682	Electrical junction box	Per each
Item No. 682	Lighting system	Per lump sum
Item No. 682-	Directional Bore (Size)	Per linear foot (meter)

For directional bore, the work performed and materials furnished as prescribed by this Item, and measured as provided under Measurement will be paid for at the Contract Price per linear foot (meter) for Directional Boring of the size of bore specified, which shall be full compensation for furnishing the bore and all incidentals necessary to complete the Item. All excavated material resulting from the directional boring operations shall be disposed of or used as directed by the Engineer at no additional cost to the Department.

682.5.01 Adjustments

General Provisions 101 through 150.

Section 683—High Level Lighting Systems

683.1 General Description

This work includes furnishing and installing lighting towers and high-level luminaires for roadway lighting systems, complete as indicated on the Plans.

683.1.01 Definitions

General Provisions 101 through 150.

683.1.02 Related References

A. Standard Specifications

Section 680—Highway Lighting

Section 920—Lighting Standards and Towers

Section 921—Luminaires

B. Referenced Documents

General Provisions 101 through 150.

683.1.03 Submittals

Refer to Subsection 680.1.03.

683.2 Materials

Use materials that meet the requirements of Subsection 680.2 and the following:

Material	Specification
Lighting Standards and Towers	Section 920
Luminaires	Section 921

683.2.01 Delivery, Storage, and Handling

General Provisions 101 through 150.

683.3 Construction Requirements

683.3.01 Personnel

General Provisions 101 through 150.

683.3.02 Equipment

General Provisions 101 through 150.

683.3.03 Preparation

General Provisions 101 through 150.

683.3.04 Fabrication

General Provisions 101 through 150.

683.3.05 Construction

Perform construction according to Subsection 680.3.05.

683.3.06 Quality Acceptance

Refer to Subsection 680.3.06.

683.3.07 Contractor Warranty and Maintenance

Contractor warranty and maintenance shall conform to Section 680. Refer to Subsection 680.3.07

683.4 Measurement

Measurement will conform to Section 680.4.

683.4.01 Limits

General Provisions 101 through 150.

683.5 Payment

Payment will be made under:

Item No. 683	Lighting tower—steel _____MH	Per each
Item No. 683	Lighting tower—steel _____MH-including lowering equipment	Per each
Item No. 683	High level luminaire—type_____ _____watt _____lamp	Per each
Item No. 683	Service car	Per each
Item No. 683	Lowering device power supply unit	Per each

683.5.01 Adjustments

General Provisions 101 through 150.

Section 685—Blast Cleaning Portland Cement Concrete Structures

685.1 General Description

This work includes blast cleaning Portland cement concrete surfaces and removing blasting residue from roadway and shoulder surfaces.

685.1.01 Definitions

General Provisions 101 through 150.

685.1.02 Related References

A. Standard Specifications

Section 109—Measurement and Payment

B. Related Documents

General Provisions 101 through 150.

685.1.03 Submittals

General Provisions 101 through 150.

685.2 Materials

General Provisions 101 through 150.

685.2.01 Delivery, Storage, and Handling

General Provisions 101 through 150.

685.3 Construction Requirements

685.3.01 Personnel

General Provisions 101 through 150.

685.3.02 Equipment

Maintain and use the following equipment for this work so as not to threaten anyone's safety or health.

- Blasting/cleaning equipment
- Supporting traffic control devices, such as arrow boards, signs, barricades, cones, etc., according to the Traffic Control Section of the Contract and the MUTCD

A. Environmental Protection

Provide blasting equipment with either of the following environmental protections:

- An enclosure to keep dust from escaping into the surrounding area
- Water spraying equipment that encircles the blast nozzle(s) to suppress the dust created by the blasting operation

B. Protective Devices

Provide and have personnel use eye and hearing protection devices when working near the blasting operation.

Also, provide personnel with respirators (with appropriate filters) or with forced air hoods when working in dust-contaminated areas.

685.3.03 Preparation

General Provisions 101 through 150.

685.3.04 Fabrication

General Provisions 101 through 150.

685.3.05 Construction

A. Blast Cleaning Methods

Use any of the following blast cleaning methods:

- Dry abrasive blasting with compressed air, blast nozzles, and abrasive
- Recirculating dry abrasive blasting with compressed air, blast nozzles, abrasive, and a recovery system
- Dry abrasive blasting with centrifugal wheels and abrasive
- Recirculating dry abrasive blasting with centrifugal wheels, abrasive, and a recovery system
- Wet abrasive blasting with compressed air, blast nozzles, abrasive, and a water injection system

B. Blast Cleaning Operation

Follow these requirements for blast cleaning operations:

1. When using compressed air in the blasting operation, provide and maintain traps to prevent contaminating the blasted substrate with oil or grease.
2. When blast cleaning within 10 ft (3 m) of a lane occupied by traffic, immediately remove the residue to prevent a traffic hazard.
3. Control dust to the Engineer's satisfaction to protect motorists from reduced visibility or damage to passing vehicles.

   The Engineer judges dust control effectiveness. If the Engineer believes that the blasting makes the highway unsafe, stop operations until instituting effective dust control measures.

C. Appearance of the Blasted Surface

Blast the surface uniformly, leaving only minute quantities of existing coating remaining in pit surface imperfections.

The remaining existing coating may be no more than one percent of the blast-cleaned surface in each square yard (meter).

Match the structure's finished appearance to the standard photographs. Copies of these can be found in the District Office, the Office of Materials, or the Office of Maintenance.

685.3.06 Quality Acceptance

All work performed under this Specification is subject to timely inspection by the Department. Correct defective work by reblasting at no additional cost to the Department.

685.3.07 Contractor Warranty and Maintenance

General Provisions 101 through 150.

685.4 Measurement

Blast cleaning of the Portland cement concrete structures is measured by the square foot (meter), according to Section 109. Median barrier walls are measured by the linear mile (kilometer) for variable height. Each face of the blast-cleaned wall is measured separately.

685.4.01 Limits

General Provisions 101 through 150.

685.5 Payment

Blast cleaning will be paid for at the Contract Unit Price bid. Payment is full compensation for costs, direct and indirect, incurred in complying with the requirements of this Specification.

Payment will be made under:

Item No. 685	Blast cleaning Portland cement concrete structures	Per square yard (meter)
Item No. 685	Blast cleaning Portland cement concrete median barriers—variable height	Per linear mile (kilometer)

685.5.01 Adjustments

General Provisions 101 through 150.

Section 686—Radio Tower Antenna

686.1 General Description

Specifications for this work will be included elsewhere in the Contract.

Section 687—Traffic Signal Timing

687.1 General Description

Specifications for this work will be included elsewhere in the Contract.

Section 688—Motorist Aid Call Box

688.1 General Description

Specifications for this work will be included elsewhere in the Contract.

Section 690—Static Scale System

690.1 General Description

This work includes furnishing and installing components for three-axle load static scale weighing systems according to the Plans and Specifications. Install the scales in truck weighing stations.

690.1.01 Definitions

General Provisions 101 through 150.

690.1.02 Related References

A. Standard Specifications

Section 101—Definitions and Terms

Section 105—Control of Work

Section 108—Prosecution and Progress

Section 109—Measurement and Payment

Section 500—Concrete Structures

Section 511—Reinforcement Steel

Section 853—Reinforcement and Tensioning Steel

B. Related Documents

National Institute of Standards and Technology Handbook 44

690.1.03 Submittals

A. Material, Equipment, and Shop Drawings

After the Contract is awarded, submit the following to the Engineer for approval:

- Complete materials list
- Complete Shop Drawings
- List of equipment with supporting data that will be incorporated into the work

Identify each Item on the material and equipment list with an applicable Section and Subsection from the Specifications.

Allow the Department 60 days for review of materials, equipment, shop drawings and other manufacturer's data.

B. Manufacturer's Data

Along with the materials and equipment list, submit manufacturer's catalogs, cuts, diagrams, performance curves, charts, and other data demonstrating that equipment adheres to the Specifications and Plans. Model numbers alone are not acceptable.

C. Manufacturer's Guarantees and Instructions

Submit manufacturer's guarantees on materials and equipment, as well as manufacturer's instruction manuals. The Engineer will transmit these to the Department for future operation and maintenance of the truck scale system. Ensure that guarantees are subject to transfer.

D. Contractor Warranty

Before beginning work, furnish a written warranty for the static scale system according to Subsection 690.3.07.

E. Brand Names or Equal

When materials and equipment are designated in the Plans or Specifications by "brand names or equal," the equal materials may be used with the Engineer's approval. Submit the name and complete description of the equal material or equipment in writing. Also submit supporting data for equipment performance according to Subsection 690.1.03 above.

690.2 Materials

Ensure that materials and equipment conform to the electronic axle load scale Plans and these Specifications. The Contractor's attention is directed to Subsection 105.04.A, "Specifications of Other Organizations".

Furnish new materials and equipment subject to the Engineer's approval.

A. Electronic Axle Truck Scale Components

Use the following standard package components and accessories for permanent scale installation according to the Plans and this Section:

- Three electronic weighing platforms

- Three weight indicating and recording elements with one totalizer
- Reinforced concrete scale pits and approach aprons
- Traffic signal lights and controls
- Conduit and cable with electrical installation for axle scales and traffic signal lights

B. Weighing Platforms and Load Cells

Install each of the 3 weighing platforms in a common pit capable of simultaneously weighing 3 tandem axles that vary from 40 in to 54 in (1 m to 1.4 m) center-to-center.

Install each weighing platform with the following capacities:

- At least 40,000 lb (18 000 kg) capacity
- Capacity to weigh an axle unit up to 12 ft (3.7 m) wide in one operation
- One-axle maximum capacity
- Capability to withstand 100 percent transit side load

1. Load Cells

   Install each weighing platform with electronic load cells with the following capabilities:

   - At least 20,000 lb (9000 kg) capacity
   - At least 200 percent overload rating
   - One-time static overload capacity of at least 300 percent of normal without structural failure

   Environmentally seal each cell against moisture and corrosion under normal pit conditions. (See Subsection 690.3.05.A, “Reinforced Concrete Scale Pit Construction.”)

2. Axle Scales

   Ensure that each weighing platform’s axle load scale has a 0.1 percent test load acceptance tolerance according to the National Institute of Standards and Technology Handbook 44.

3. Axle Weigh Bridges

   Equip each weighing platform’s axle weigh bridge with appropriate check devices designed to prevent the reinforced concrete platform from moving horizontally.

C. Weight Indicating and Recording Elements

Use easily replaced and repaired plug-in weight indicators, printers, interfacing, and memory storage units.

Power the weight indicating and recording elements using a 115-volt AC, 60 hertz, single phase electricity.

Furnish one spare weight indicator and one spare electronic printer in case of electronic equipment interruptions.

1. Digital Weight Indicator

   Provide each weighing platform with an individually housed digital indicator with these features:

   - Weight indicating capability of maximum 20 lb (10 kg) increments
   - Measuring capability of up to 99,980 lbs (45 350 kg)
   - Five-digit illuminated displays using at least ½ in (13 mm) high digits
   - Easily replaced snap-in snap-out type printed circuit boards for the indicator electronics
   - Push-button zero that can eventually take an additional outside digital indicator for driver viewing

2. Printer Recorder

   Provide an individually housed dot-matrix programmable printer-totalizer capable of printing letters and numbers on paper tape with the following format:

   Georgia Department of Transportation

   _____ County Weigh Station

_____ Bound Lane

_____ (Date/Time)

(The following chart is a format example only.)

Axle 1	11,980 lbs (5434 kg)
Axle 2	17,860 lbs (8101 kg)
Axle 3	18,200 lbs (8255 kg)
Axle 4	19,720 lbs (8945 kg)
Axle 5	18,800 lbs (8528 kg)
Axle 6	18,500 lbs (8391 kg)
Gross	105,060 lbs (47 654 kg)

a. Install printer systems with the following:
   - Print control switches on each individual weighing platform
   - Totalizer memory bank status indicators capable of 0.1 percent accuracy for each of the 3-axle load scales
   - Twenty-four-hour clocks

D. Reinforced Concrete Scale Pits

See Subsection 690.3.05.A, “Reinforced Concrete Scale Pit Construction.”

E. Traffic Signal Lights and Controls

Use three traffic signals, equipped as follows:

- Two 8 in (203 mm) diameter lenses
- Two 150-watt signal bulbs
- Visors over each lens

F. Conduit and Cable

Furnish and install according to the National Electrical Code conduit, cable and pull boxes, junction boxes, shielding, grounding, surge voltage lightning protection between the weight indicating and recording element and the scale, the weight platforms, pit light, receptacle, and appurtenances.

See Subsection 690.3.05.D for installation.

690.2.01 Delivery, Storage, and Handling

Do not use the interstate Right-of-Way outside the truck weighing station to store equipment or supplies.

690.3 Construction Requirements

690.3.01 Personnel

A. Training

During the Acceptance Performance Test (APT) period following installation, train at least 10 Department-designated people to operate and maintain the truck weighing station systems. Furnish two operations and maintenance manual(s) for each set of platforms.

1. Provide one day of on-the job-instruction in weighing trucks and using controls for weighing, recording, and traffic signal.
2. Provide one day of training in routine maintenance and trouble-shooting to determine probable causes of malfunctions.

B. Assistance During APT

Provide a trained static scale system specialist to assist in system operation for approximately one week during the APT.

690.3.02 Equipment

General Provisions 101 through 150.

690.3.03 Preparation

Truck weighing station construction may already be in progress. Coordinate operations with utility companies and other Contractors to complete the work quickly.

690.3.04 Fabrication

General Provisions 101 through 150.

690.3.05 Construction

Maintain limit of access to the truck weighing station. Enter and exit the station by ramps only.

A. Reinforced Concrete Scale Pit Construction

Furnish the reinforced concrete scale pits complete, including the structural design. Ensure the structural design supports the maximum compression load cell overload capacity without structural failure (see Subsection 690.2.B).

1. Concrete Work

   Install scale pit concrete including sleeves, piping, conduits, anchors, frames, other Items to be built-in, and other required Work and appurtenances.

   Do concrete Work according to Section 500 and Section 511.

   Use deformed billet steel bars for bar reinforcement steel according to Subsection 853.2.

2. Scale Pit Construction

   Construct scale pits and aprons at locations designated on the Plans and as follows:

   a. Make the top of the pit and aprons flush and level with the adjoining pavement.
   b. Furnish and install a pit drain connected to a 4 in (100 mm) drain line, provided by the Department, to a point below and near the center of the scale pit unless otherwise noted on the Plans.
   c. Provide a float-controlled high water alarm system in the scale pits that automatically activates a red warning light within the operator’s tower when water in the scale pit reaches 6 in (150 mm) deep.
   d. Install an alarm buzzer with the high water alarm system in the operator’s tower. Equip the buzzer with a volume control.
   e. Provide scale pits with an access cover and manhole with at least 3 ft (1 m) of vertical crawl space for equipment inspection and maintenance.
   f. Enclose each scale platform and pit with steel coping.

B. Traffic Lights and Controls

Install and wire three red (stop)–green (go) traffic signal lights and controls as indicated on the Plans. and as follows:

1. Place two of these traffic lights in the bypass lane. Operate these using one common three-position (red-off-green) toggle switch located on the counter in the operations tower.
2. Place the third traffic light at the axle load scales area. Operate this at the scales console in the operations tower.

C. Span and Calibration Adjustments

Place span and calibration adjustments for the entire weighing system inside the weighing station building at the indicators. Install the adjustments so that replacing the circuit board does not require recalibration of the scales.

D. Cable and Conduit Connections

Install cable connections in conduit between the elements and the platform scales.

Follow these requirements for cable and installation:

- Conform to Section XV of the Scale Manufacturer's Association's Specification Recommendations.
- Use armored flexible cable between scale pits and load cells.
- Use Schedule 40 PVC for the buried conduit between the scale pits and the operations building.
- Environmentally seal the load cell and underground connector cable connections.

690.3.06 Quality Acceptance

Time is of the essence in this Contract. Complete installation and testing on or before the Project completion date and be ready for the Department's acceptance performance test.

Test with weights certified and calibrated according to Georgia Department of Agriculture standards.

Measure the acceptance tolerance of the weighing system according to Subsection 690.2.B.

A. Acceptance Performance Test (APT)

The APT shall demonstrate to the Department's satisfaction that the static scale system consistently meets the performance requirements of the Plans and Specifications.

At the conclusion of a successful APT, apply 0.2 percent maintenance tolerance to the scales and equipment until they are recalibrated.

1. Testing Procedure

   Submit a test plan to the Department for approval within 30 days after the Notice to Proceed.

   Begin the APT on the first normal working day following completion, calibration, and testing of the installation.

   During the APT period, the Department will operate the static scale system for approximately 8 hours per day, 5 days per week for 8 consecutive weeks.

   Provide a trained static scale system specialist to assist in the operation for approximately 1 week.

2. Failure or Delay in Completing Work on Time

   The Contractor's attention is directed to Subsection 108.08, "Failure or Delay in Completing Work on Time." Liquidated damages will start on the day after the project completion date if the installation is not complete and ready for the APT.

   Deductions for liquidated damages for each day of overrun in contract time will stop when the APT begins.

690.3.07 Contractor Warranty and Maintenance

A. Static Scale System Warranty

Before beginning construction, warrant the static scale system equipment in writing against defective material and workmanship.

Furnish the written warranty to the Department when submitting Shop Drawings for approval. Include the provision that warranties are subject to transfer to the Department.

Warrant that for 6 months from the beginning date of the APT that equipment will perform according to Subsection 690.2.B and Subsection 690.2.C, continuously serving as intended under conditions required for the equipment.

The written warranty must be accepted and approved by the Department before beginning installation of the static scale system.

The warranty excludes damage caused by fire, flooding, lightning, accidents, vandalism, or natural disasters.

B. Warranty Service

Write the warranty to cover materials, equipment, service, labor, travel, and incidentals necessary for warranty service at no additional cost to the Department.

Provide warranty service including the following:

1. Every 90 days during the period of warranty, calibrate to acceptance tolerance of scales using certified test weights.
2. Make additional warranty calls during regularly scheduled working hours Monday through Friday as requested by the Chief of Permits and Enforcement or a duly authorized representative. Make a maximum of 10 calls during the warranty period without additional charge to the Department.

   Perform requested warranty service either the same day or on the first working day following the request.

690.4 Measurement

This work will not be measured separately for payment.

690.4.01 Limits

General Provisions 101 through 150.

690.5 Payment

Electronic axle load truck static scale system will be paid for at the Contract Lump Sum Price. Payment is full compensation for materials, equipment, labor, tools, direction, and incidentals necessary to complete the Item according to the Specifications and Plans. Payment includes the spare weight indicator and standby printer, calibration and testing, a 6-month warranty, and Department personnel training.

Partial payments will be made on the basis of the following schedule of payments expressed as a percentage of the Contract Lump Sum Price:

Scale pit construction	20%
Furnishing, installing, and calibrating the scales, weight indicator/recording element, and totalizer/printer	70%
End of 90-day acceptance performance testing as described under Subsection 690.3.06	10%

Payment will be made under:

Item No. 690	Electronic axle load truck static scale system truck weighing station_____	Per lump sum

690.5.01 Adjustments

General Provisions 101 through 150.

Section 691—Weigh-in Motion Scale System

691.1 General Description

This work includes furnishing and installing weigh-in-motion system in truck weighing stations according to the Plans and Specifications.

The Department's objective is to have a system that automatically pre-selects vehicles in motion for weighing, then automatically directs the vehicles to the enforcement scales.

691.1.01 Definitions

General Provisions 101 through 150.

691.1.02 Related References

A. Standard Specifications

Section 101—Definitions and Terms

Section 105—Control of Work

Section 108—Prosecution and Progress

Section 109—Measurement and Payment

Section 500—Concrete Structures

Section 511—Reinforcement Steel

Section 680—Highway Lighting

Section 923—Electrical Conduit

B. Referenced Documents

Scale Manufacturer's Association Handbook 44

Insulated Power Cable Engineers' Association Specifications

National Bureau of Standard Handbook 44

Code of Public Transportation, State of Georgia

691.1.03 Submittals

After the Contract is awarded, submit the items listed below to the Engineer for approval.

Allow the Department 60 days for review of materials, equipment, shop drawings and other manufacturer's data.

When the Department approves the Shop Drawings and other items listed herein, assume responsibility for furnishing material or performing Work as required by the Plans and these Specifications. Meet the requirements of the acceptance performance test (APT) according to Subsection 691.3.06.

A. Equipment Performance Supporting Data

Furnish documentation according to Subsection 691.3.07 that demonstrates to the Department's satisfaction that equipment proposed for use in the weigh-in-motion scale system:

- Is of standard manufacture
- Has been available for purchase for at least two years
- Has a proven acceptable performance history under conditions similar to those for the intended use

Include the following information with the equipment documentation:

- Detailed descriptions of how the system requirements will be met
- Drawings showing control and display panels with descriptions
- Description of a similar installation with the standard package components described in Subsection 691.2.A that has been in use for at least 1 year or has satisfactorily completed one project for the Department, including:
  - The owner's name
  - Owner's address
  - A contact name
  - A contact telephone number

B. Demonstration

Demonstrate to the Department, by means of a pre-existing weigh-in-motion system which has been fabricated with the component equipment to be used on this project, that the Contractor has successfully provided and installed a weigh-in-motion system which is fully operative and has been in use for not less than one year, and is meeting the weighing performance requirements in Subsection 691.3.06 "Quality Acceptance."

Upon request by the Engineer, arrange the pre-existing system demonstration and furnish operations performance data to the Department within 10 days after the request.

The Department will, at its option and expense, provide selected persons to view the demonstration.

C. Manufacturer's Data

Along with the materials and equipment list, submit manufacturer's catalogs, cuts, diagrams, performance curves, charts, and other data demonstrating that equipment complies with the Specifications and Plans. Model numbers alone are not acceptable.

D. Warranty

Before beginning work, furnish a written warranty for the static scale system according to Subsection 691.3.07.

E. Manufacturer's Guarantees and Instructions

Submit manufacturer's guarantees on materials and equipment as well as manufacturer's instruction manuals. The Engineer will transmit these to the Department for future operation and maintenance of the truck scale system. Ensure guarantees are subject to transfer.

F. Brand Names or Equal

Materials and equipment designated on the Plans or Specifications as "brand names or equal," may be substituted for equal materials with the Engineer's approval. Submit the name and complete description of the equal material or equipment in writing. Also submit supporting data for equipment performance.

691.2 Materials

A. Weigh-in-Motion Scale Components

The work includes, but is not limited to, the following standard package components. Construct accessories as shown on the Plans and as described in these Specifications.

- Electronic weighing platform(s)
- Speed-presence detectors, inductive loop type with:
  - Presence detector loops
  - Speed detector loops
- Weight indicator, recording elements, and control unit with digital processor
- Over-height detector
- Traffic control subsystems

Components will automatically pre-select vehicles with one of the following conditions for legal static weighing or over-dimension measuring:

- Exceeds manually entered threshold axle or gross weight
- Exceeds bridge formula weight and axle spacing limitations according to Subsection 691.3.06.A
- Is within 6 in (150 mm) or above of the maximum height limitation as set forth herein

B. Electronic Axle Load Scale Plans

Ensure that materials and equipment for this work conform to the electronic axle load scale plans and these Specifications. The Contractor's attention is directed to Subsection 105.04.A, "Specifications of Other Organizations."

C. Scalepits and Weighing Platforms

Use scale pits and weighing platforms as follows:

1. Scale Pits

   Furnish the structural design of and install scale pits. Ensure that the one-time overload capacity without structural failure is at least 300 percent of the legal axle load limit.

2. Weighing Platforms

   Furnish and install weighing platforms with a minimum load capacity of at least 200 percent of the legal axle load limit.

D. Inductive Loops

Furnish and install inductive loops in existing concrete pavement according to Subsection 691.3.05.B.

E. Weight Indicator, Recording Elements, and Control Unit with Digital Processor

Refer to Subsection 691.3.05.C.

F. Traffic Control Subsystem

Furnish and install the traffic control subsystem according to the Plans, these Specifications, and Subsection 691.3.05.D.

G. Conduit and Cable with Electrical Wiring

Furnish and install cables according to the NEC, Section XV of the National Bureau of Standards Handbook 44, the Plans, Subsection 691.3.05.E, and the following:

1. Rigid Steel Conduit: Use according to Subsection 923.2.01.A.2.
2. Non-metallic conduit: Use according to Subsection 923.2.02.
3. Flexible conduit: Use flexible conduit with these features:
   - Galvanized steel core
   - Liquid tight jacket of polyvinyl chloride (PVC)
   - Continuous copper bonding conductor wound spirally between the convolutions
   - UL approved flexible conduit
4. Use wire and cable that conforms to the applicable sections of the IPCEA (Insulated Power Cable Engineers' Association) Specifications S-19-81.

Use pull and junction boxes according to Subsection 680.3.05.B.

691.2.01 Delivery, Storage, and Handling

Do not use the interstate Right-of-Way outside the truck weighing station to store equipment or supplies.

691.3 Construction Requirements

691.3.01 Personnel

A. Training

During the acceptance testing period following installation, train at least 10 Department-designated people to operate and maintain truck weighing station systems.

B. Assistance During APT

Provide a trained static scale system specialist to assist in system operation for approximately one week during the APT. (See Subsection 691.3.06.D.)

691.3.02 Equipment

General Provisions 101 through 150.

691.3.03 Preparation

Truck weighing station construction may be in progress. Coordinate operations with utility companies and other contractors to complete the work quickly.

691.3.04 Fabrication

General Provisions 101 through 150.

691.3.05 Construction

A. Scalepit(s) and Weighing Platform(s)

Construct the scale pits in existing pavement and base material as shown on a typical section according to Section 500 and Section 511 and as follows. Closely coordinate efforts with other contractors.

1. Install a drain line to an outlet beyond the shoulder pavement.
2. Make the entire weigh-in-motion scales flush with the pavement. Ensure that the completed scales do not rock or hammer.
3. Hermetically seal and treat the load cells to prevent moisture penetration and corrosion under normal pit conditions.

B. Inductive Loops

Saw cut pavement, install the loop wires, and seal the saw cuts to the Engineer's satisfaction.

Provide a loop detector in the bypass lane that detects a vehicle that was directed by the automatic sorting system to proceed to the static axle scales but has incorrectly proceeded to the bypass lane.

Equip the loop detector to activate a buzzer at the operator's console to alert the operator.

C. Weight Indicator, Recording Elements, and Control Unit with Digital Processor

Furnish and install the weight indicator, recording elements, and control unit with a digital processor in the operations office that will be provided by others.

Others will install the heating and air conditioning system in the operations office environment where the equipment will perform.

1. Electrical Service

   Electrical service provided by others in the operations office will be 115-volt, 60 hertz (plus or minus 2 hertz), single phase service. Provide for power connections from panel board "A" to the equipment in the operations office.

2. Threshold Indicators

   Furnish and install detection devices that use overhead traffic control signs to automatically direct vehicles to the static system under the following conditions:

   - The vehicle exceeds an operator-entered threshold speed when passing over scales.
   - The vehicle is out of position so that all wheels do not pass over the scales.

   Provide thumb wheel switches or a keyboard on the operator's console so that threshold weights for axle and gross weights can be entered into the instrumentation.

   When the operator-entered threshold weights are exceeded, have the instrumentation automatically activate the overhead traffic control sign and eye level, pole-mounted sign directing the pre-selected vehicle to the static scale system.

3. Control Signs and Indicators

   Provide a high-intensity light on the back of each overhead signal head that will illuminate at the same time the green arrow is illuminated. Install two repeater pin lights at the weigh-in-motion console that indicate the vehicle has been directed to the static scales or the bypass lane.

   Provide a manual switch in the operations office to override the automatic mode of the overhead signs.

4. Statistical Data Printer

   Equip the operator's console with a microprocessor with changeable program that stores, recalls, and provides statistical data in hard copy via a printer.

   The printer shall print at the operator's discretion the weight indicator video display identifying axle weights, axle spacing, length of vehicle, and gross weights to include data/time and velocity for each vehicle weighed in motion.

   Equip the printer to print axle and gross weight data in no more than three seconds.

5. Selection Distance

   Program the instrumentation to pre-select successive vehicles one second or more apart from tail to head.

6. Automatic Zero

   Provide automatic zero tracking along with an adapter connection for "field changing" the indicating and recording weight units from pounds to kilograms.

D. Traffic Control Subsystem

Furnish and install the following components:

1. Lamps

   Furnish and install reflector lamps using International Traffic Engineers colors in red for the "X" and green for the arrow.

   - Use signals capable of the number of indications shown on the Plans and clearly visible at 1/4 mile (400 m) under normal atmospheric conditions.
   - Use lamp sockets and lamps that are UL approved for outdoor service.
   - Use lamps rated at 120 volts with a manufacturer's life expectancy of no less than 1,500 hours.

   Ensure that if two lamp bulbs fail, the lamp continues to indicate the proper signal.

2. Lighting Effects

   Provide control signals with hinged and ventilated protective sun screens to eliminate "phantom" effects from unlighted lamps. Screens also protect the signal lamps from damage from thrown objects and birds.

3. Other

   Furnish and install poles, cables, guys and anchors, and appurtenances including controls and electrical connections between the operations office and the overhead signs and cable.

E. Conduit and Cable with Electrical Wiring

Install cables in rigid galvanized steel or schedule 40 polyvinyl chloride (PVC) conduit between load cells, junction boxes, and electronic instrumentation. Install only smooth, standard dimension conduit according to the following:

- In exposed outside areas, install rigid galvanized steel conduit unless otherwise indicated.
- In underground areas, install rigid galvanized steel or schedule 40 PVC conduit.
- For inside areas other than installations in concrete slabs, install electrical metallic tubing (EMT) conduit, if desired.

Make conduit connections to moveable or vibrating equipment with the correct length of flexible conduit.

1. Installation Procedures

   Install conduit as follows:

a. Use at least four 1 in (25 mm) rigid galvanized steel conduits to attach the electrical junction box at the operator's console to a ground-mounted junction box 5 ft (1.5 m) from the building. The junction box is provided by the Building Contractor.

b. Shield the electronic cable connecting the transducers and instrumentation. Interconnect and carry shields to a single common ground.

c. Use a ground separate from the power source ground. Provide it for the transducer/ instrumentation only.

d. Environmentally seal transducer and underground connector cable connections.

2. Grounding System

Furnish and install surge voltage lightning protection consisting of 8 ft (2.4 m) grounding rods at each transducer load cell location, at the balance box(s), and at the instrumentation input. Ensure that the grounding system meets National Electric Code requirements.

Ground the scale platforms at 4 locations with 5/8 in (16 mm) diameter grounding rods 8 ft (2.4 m) long and a continuous length of ground bus. Ground each platform at least once.

3. Instrument Input

Provide the instrument input, balance box(s), and each pair of transducer load cells with fast acting, two-stage shunting circuitry and surge capacity that are compatible with the transducers and electronic components.

Ensure that the surge voltage lightning protection system is electrically passive at normal circuit operating voltage and returns to a passive state after the surge voltage has been shunted. The shunted circuitry shall be capable of being tested and repaired independently of the scale operating parts and circuitry.

691.3.06 Quality Acceptance

A. Scale Performance Requirements

Ensure that the weigh-in-motion scale system automatically and accurately weighs each axle of a multi-axle vehicle (up to 11 axles) within the tolerances given in this subsection. Ensure that the system establishes the gross weight of the vehicle by totaling the individual axle weights.

Vehicle weight is defined as the vehicle weight established by static weighing on axle load scales with an acceptance tolerance of 0.1 percent of test load according to the National Bureau of Standard Handbook 44. Use the axle load truck scales regularly used for enforcement weighing within the truck weighing station.

Ensure that the system's measurement of the distance in feet (meters) between two or more consecutive axles on 65,000 lbs (29 483 kg) vehicles (gross weight) is within 5 percent of a distance measured by permits and enforcement officers using standard measuring equipment and techniques.

Ensure that 90 percent of the vehicles checked for compliance with the bridge formula outlined below are measured to this accuracy.

1. Bridge Formula

Have operators confirm that the system checks vehicles with a gross weight of 39,000 lbs (17 690 kg) or more for compliance with the "Bridge Formula" provisions of Chapter 32-6, Article 2, Section 32-6-26 of the Code of Public Transportation, State of Georgia.

2. Speed and Rate of Vehicles

Build the weighing system to perform the above functions while up to 12 vehicles per minute pass in motion over the scales.

Ensure that weights are accurate as a variety of multiple axle trucks pass over the scales at speeds from 10 mph to 55 mph (15 to 90 kph)

3. Gross Weight

Ensure that the scales accurately establish the vehicle gross weight as follows:

- At speeds above 10 mph (15 kph), within plus or minus 5 percent of the actual vehicle gross weight and within a 90 percent confidence level

- At speeds below 10 mph (15 kph), within plus or minus 2 percent of actual vehicle gross weight within a 95 percent confidence level

4. Axle Weight

   Ensure that the scales establish vehicle axle weights as follows:

   At speeds above 10 mph (15 kph), within plus or minus 10 percent of the vehicle axle weight and within a 75 percent confidence level

   At speeds below 10 mph (15 kph), within plus or minus 5 percent of the vehicle axle weight and within a 75 percent confidence level

5. Accuracy Limits

   Ensure 75 to 100 percent of load limits up to 20,340 lbs (9226 kg) for a single axle weight and 80,000 lbs (36 287 kg) for gross vehicle weight.

6. Environmental Conditions

   Ensure that the weigh-in-motion system operates under typical environmental conditions experienced in the state of Georgia.

7. Over-Height Detection Device

   Include the following over-height detection devices with the scale system:

   a. In the Vicinity

      Install an over-height detection device near the scales to detect vehicles 13 ft (4 m) high or more (adjustable to 13 ft, 6 in [4.1 m]). Ensure that this detector operates under the same conditions of vehicle speeds, numbers of vehicles per minute, and environmental conditions required for other components of the system. Have the system automatically direct vehicles at or above the present height limit to the static scales.

   b. At the Approach

      At the approach to the static scales used for enforcement weighing, where indicated on the Plans, install another over-height detection device that will detect a vehicle 13 ft, 6 in (4.1 m) high or more. Install a momentary adjustable volume audible alarm and a red light set to blink for 5 seconds in the operator's office to alert the operator of a possible over-height violation.

B. Time is of the Essence

Time is of the essence in this Contract. Complete installation and testing on or before the Project completion date and be ready for the Department's acceptance performance test.

1. Failure or Delay in Completing Work on Time

   The Contractor's attention is directed to Subsection 108.08, "Failure or Delay in Completing Work on Time."

   Liquidated damages for each day of Project overrun will start on the day after the Project completion date if the installation is not complete and ready for the APT.

   Liquidated damages will stop when the APT begins.

   At the end of the APT period, if the weigh-in-motion scale system as described on the Plans and these Specifications does not perform to the satisfaction of the Department, the Department reserves the right to continue testing or reject the entire system.

2. Removal of Equipment

   If the Department rejects the entire weigh-in-motion scale system, the Contractor may remove the electronic weighing platform(s), weight indicator, recording elements, and control unit with digital processor.

   The Contractor may not remove inductive loops, traffic control subsystem overhead signs, conduit, and cable with electrical wiring. These will become the Department's property.

C. Testing

Before the APT begins, run calibration and performance tests on the weigh-in-motion scale system with weights certified and calibrated according to Georgia Department of Agriculture standards.

The weigh-in-motion scale platforms will be statically calibrated to plus or minus 1 percent (between 1,000 lbs and 6,000 lbs [454 kg and 2724 kg]) when the weights are uniformly distributed over two 100 in² (0.065 m²) areas anywhere on the scale platforms

Measure for acceptance tolerances according to Subsection 691.3.06.A.

D. Acceptance Performance Test (APT)

The APT shall demonstrate to the Department's satisfaction that the weigh-in-motion scale system consistently meets the performance requirements of the Plans and Specifications.

Submit a test plan to the Department for approval within thirty 30 days after Notice to Proceed.

The APT period shall begin on the first normal working day following completion, calibration, and testing of the installation.

During the APT period:

1. The Department will operate the weigh-in-motion pre-selection system for approximately 8 hours per day, 5 days per week for 8 consecutive weeks.
2. Department personnel will check the calibrated performance by obtaining actual vehicle weight samples.
3. Provide a trained static scale system specialist to assist in the APT operation for approximately one week.

691.3.07 Contractor Warranty and Maintenance

A. Weigh-in-Motion Scale System Warranty

Before beginning construction, warrant the weigh-in-motion scale system equipment in writing against defective material and workmanship.

Furnish the written warranty to the Department when submitting Shop Drawings for approval. Include the provision that warranties are subject to transfer to the Department.

Warrant that for 6 months from the beginning date of the APT the equipment will perform according to Subsection 691.3.06.A, operating as intended under conditions required for the equipment.

Have the written warranty accepted and approved by the Department before beginning installation of the weigh-in-motion scale system.

The warranty excludes damage caused by fire, flooding, lightning, accidents, vandalism, or natural disasters.

Provide warranty service within 48 hours of notice that warranty work is required, excluding weekends.

691.4 Measurement

This work will not be measured separately for payment

691.4.01 Limits

General Provisions 101 through 150.

691.5 Payment

The weigh-in-motion scale system as described above will be paid for at the Contract Lump Sum Price. Payment is full compensation for all materials, equipment, labor, tools, superintendence, and incidentals necessary to complete the Item according to the Plans and Specifications. Payment also includes calibration and testing, acceptance performance testing, a 6-month warranty, and Department personnel training.

A percentage of the Contract Lump Sum Price will be paid according to the following cost schedule:

Completion of installation, calibration, and testing of the entire weigh-in-motion scale system	35%
Completion of the acceptance performance test to the satisfaction of the Department.	65%

Payment will be made under:

Item No. 691	Weigh-in-motion scale system truck weighing station_____	Per lump sum

691.5.01 Adjustments

If the APT does not demonstrate that the performance requirements of the Plans and Specifications have been successfully accomplished to the satisfaction of the Department, and the Department rejects the entire weigh-in-motion scale system, payment to the Contractor will be limited to 35 percent of the Contract Lump Sum Price.

Section 692—Automatic Vehicle Identification System, Tws

692.1 General Description

Specifications for this work will be included elsewhere in the Contract.

Section 693—Truck Weigh Station Operations System

693.1 General Description

Specifications for this work will be included elsewhere in the Contract.

Section 694—Weather Monitoring and Reporting System

694.1 General Description

Specifications for this work will be included elsewhere in the Contract.

Section 695—Elevator Systems

695.1 General Description

Specifications for this work will be included elsewhere in the Contract.

Section 700—Grassing

700.1 General Description

This work includes preparing the ground, furnishing, planting, seeding, fertilizing, sodding, and mulching disturbed areas within the Right-of-Way limits and easement areas adjacent to the right-of-way as shown on the Plans except as designated by the Engineer to remain natural.

700.1.01 Definitions

General Provisions 101 through 150.

700.1.02 Related References

A. Standard Specifications

Section 160—Reclamation of Material Pits and Waste Areas

Section 163—Miscellaneous Erosion Control Items

Section 718—Wood Fiber

Section 822—Emulsified Asphalt

Section 882—Lime

Section 890—Seed and Sod

Section 891—Fertilizers

Section 893—Miscellaneous Planting Materials

Section 895—Polyacrylamide

B. Referenced Documents

QPL 33

QPL 84

700.1.03 Submittals

Submit manufacturer's product expiration date along with written instructions to ensure proper application, safety, storage, and handling of Polyacrylamide products used in The Work.

700.2 Materials

Use materials that meet the requirements of the following Specifications:

Material	Section
Wood Fiber Mulch	718.2
Agricultural Lime	882.2.01
Seed	890.2.01
Sod	890.2.02
Fertilizer	891.2.01
Plant Topsoil	893.2.01
Mulch	893.2.02
Inoculants	893.2.04
Tackifiers	QPL 33
Anionic Polyacrylamide	QPL 84 & Section 895

A. Seeds

Whenever seeds are specified by their common names, use the strains indicated by their botanical names.

B. Water

Obtain the water for grassing from an approved source. Use water free of harmful chemicals, acids, alkalies, and other substances that may harm plant growth or emit odors. Do not use salt or brackish water.

C. Agricultural Lime

Agricultural lime rates will be based on a laboratory soil test report. The Contractor is responsible for ensuring the tests are performed by an approved laboratory. Provide a copy of test results to the Engineer. Refer to Section 882 Lime and GSP 18 of the Sampling and Testing Inspection manual for additional information on rates, use, handling and sampling procedures.

D. Fertilizer Mixed Grade

Fertilizer analysis and rates will be based on a laboratory soil test report. The Contractor is responsible for ensuring the tests are performed by an approved laboratory. Provide a copy of test results to the Engineer. Refer to Section 891 Fertilizer and GSP 18 of the Sampling and Testing Inspection manual for additional information on rates, use, handling and sampling procedures.

E. Mulch

Use straw or hay mulch according to Subsection 700.3.05.G.

Use wood fiber mulch in hydroseeding according to Subsection 700.3.05.F.1.

700.2.01 Delivery, Storage, and Handling

General Provisions 101 through 150.

700.3 Construction Requirements

700.3.01 Personnel

General Provisions 101 through 150.

700.3.02 Equipment

Use grassing equipment able to produce the required results.

Never allow the grading (height of cut) to exceed the grassing equipment's operating range.

A. Mulch Material Equipment

Use mulching equipment that uniformly cuts the specified materials into the soil to the required control depth.

B. Hydroseeding Equipment

For hydroseeding equipment, see Subsection 700.3.05.F.

700.3.03 Preparation

General Provisions 101 through 150.

700.3.04 Fabrication

General Provisions 101 through 150.

700.3.05 Construction

Follow the planting zones, planting dates, types of seed, seed mixtures, and application rates described throughout this Section. The Engineer has the authority to alter the planting dates as set forth by a period of 2 weeks. This 2-week period may be applied to either the beginning of the specified planting and/or to the end of the end of the specified planting season.

In general:

- Obtain the Engineer's approval before changing the ground cover type.
- Do not use annual rye grass seeds with permanent grassing.
- Follow the planting zones indicated on the Georgia State Planting Zone Map, below.
- Sod may be installed throughout the year, weather permitting.
- For permanent grassing, apply the combined amounts of all seeds for each time period within each planting zone and roadway location listed in the Seeding Table, below. Do not exceed the amounts of specified seed.

PLANTING ZONE MAP

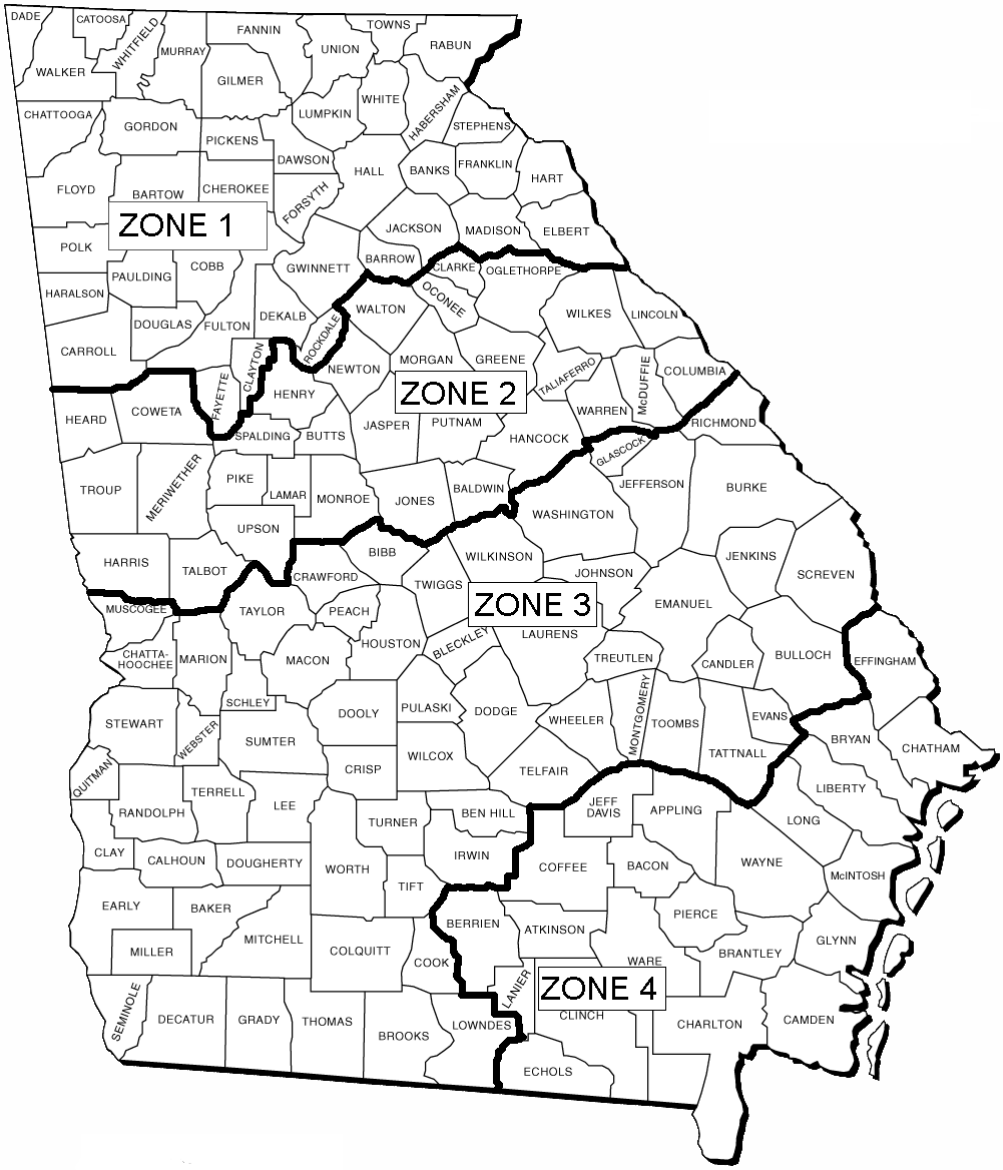

NON-NATIVE GRASS SEEDING TABLE 1

(Temporary and Permanent Seed Types for Shoulders, Medians and Slopes 3:1 or Flatter)

Common Name	Botanical Name	Class/Type	Rate/Acre	Planting Zone	Planting Dates
Common Bermuda Grass (Hulled)	*Cynodon dactylon*	**Required Permanent Grass**	**10 (11)**	**1**	**April 16 – August 31**
Common Bermuda Grass (Unhulled)			**10 (11)**		
Common Bermuda Grass (Hulled)	*Cynodon dactylon*	**Required Permanent Grass**	**10 (11)**	**2,3,4**	**April 1 – October 15**
Common Bermuda Grass (Unhulled)			**10 (11)**		
Bahaia Grass	*Paspalum motatum*		**10 (11)**		
Rye Grass, Millet, Cereal Grass (Oats)	*Lolium penne spsp. Multiflorum, Echinochloa cursgalli, Avena sativa*	**Temporary Grass**	**50 (56)**	**1**	**September 1-April 15**
Rye Grass, Millet, Cereal Grass (Oats)	*Lolium penne spsp. Multiflorum, Echinochloa cursgalli, Avena sativa*	**Temporary Grass**	**50 (56)**	**2,3,4**	**October 16-March 31**

NON-NATIVE SEEDING TABLE 2

(Temporary and Permanent Seed Types

for back slopes, fill slopes and areas which will not be subject

to frequent mowing, slopes steeper than 3:1)

Common Name	Botanical Name	Class/Type	Rate/Acre	Planting Zone	Planting Dates
Interstate Lespedeza	*Lespedeza sericea*	Permanent Grass	50(56)	1,2	March 1 – August 31
Weeping Lovegrass	*Eragrostis curvula*	Temporary Grass	10(11)		
Interstate Lespedeza	*Lespedeza sericea*	Permanent Grass	75(84)	1,2	September 1-February 28
Tall Fescue	*Festuca arundinacea*	Temporary Grass	50(56)		
Interstate Lespedeza	*Lespedeza sericea*	Permanent Grass	50(56)	3,4	April 1 – October 31
Weeping Love Grass	*Eragrostis curvula*	Temporary Grass	10(11)		
Interstate Lespedeza	*Lespedeza sericea*	Permanent Grass	50(56)	3,4	November 1 – March 31
Weeping Love Grass	*Eragrostis curvula*	Temporary Grass	10(11)		

NATIVE GRASS SEEDING TABLE 3

For Non-mowable Slopes or Areas Designated as Permanent Native Grass Plots.

Plant native seed mixes on back slopes, fill slopes and areas which will not be subject to frequent mowing (slopes steeper than 3:1).

Common Name	Botanical Name	Class/Type	Rate/Acre	Planting Zone	Planting Dates
Canada Wild Rye	*Elymus canadensis*	Cool Season	Minimum 2 (2)	1,2,3,4	October 31 - March 31
Virginia Wild Rye	*Elymus virginicus*	Cool Season	Minimum 2 (2)	1,2,3,4	October 31 - March 31
Bottle-brush Grass	*Hystrix patula*	Cool Season	Minimum 2 (2)	1,2,3,4	October 31 - March 31
Little Bluestem	*Schizachyrium scoparium* (*Andropogon scoparius*)	Warm Season	Minimum 2 (2)	1,2,3,4	March31- August 31
Indiangrass	*Sorghastrum nutans*	Warm Season	Minimum 2 (2)	1,2,3,4	March 31- August 31
Eastern Gama Grass	*Tripsacum dactyloides*	Warm Season	Minimum 2 (2)	1,2,3,41,2,3,4	March 31- August 31
Rice Cut Grass	*Leersia oryzoides*	Warm Season	Minimum 2 (2)	1,2,3,4	March 31- August 31
Deertongue	*Panicum clandestinum*	Warm Season	Minimum 2 (2)	1,2,3,4	March 31- August 31
Switchgrass	*Panicum virgatum*	Warm Season	Minimum 2 (2)	1,2,3,4	March 31- August 31
Woolgrass	*Scirpus cyperinus*	Cool Season	Minimum 2 (2)	1,2,3,4	October 31 - March 31
River Oats	*Chasmanthium latifolium*	Cool Season	Minimum 2 (2)	1,2,3,4	October 31 - March 31
Purple Top	Tridens flavus	Warm Season	Minimum 2 (2)	1,2,3,4	March 31- August 31

See plan sheets/plant lists for detailed native restoration and riparian mitigation seed mix combinations to be applied at a minimum rate total of 10 (11) lbs per acre (kg/hectare) for each combined mix. If the mix is not provided in the plan sheets, use a minimum of 3 species based on planting dates shown above.

HERBACEOUS PLANT SEEDING TABLE 4

(Approved for Riparian Mitigation or for Seed Mixes

on Slopes Steeper than 3:1-Requiring Permanent Planting)

Common name	Botanical name	Class/type	Rate/Acre	Planting Zone	Planting Dates
Joe Pye Weed	*Eupatorium fistulosum*	Herbaceous Pe	Minimum 2 (2)	1,2,3,4	September 1 – May 1
Ironweed	*Vernonia novaboracensis*	Herbaceous Perennial	Up to 10(11)	1,2,3,4	March 1 - August 31,
White snakeroot	*Ageratina altissima* (*Eupat rugosum)*	Herbaceous Perennial	Up to 10(11)	1,2,3,4	September 1 – May 1
Swamp milkweed	*Asclepias incarnata*	Herbaceous Perennial	Up to 10(11)	1,2,3,4	March 1 - August 31,
Frost aster	*Aster pilosus* (*Symphyotric*	Herbaceous Perennial	Up to 10(11)	1,2,3,4	September 1 – May 1
Partridge pea	*Chamaecrista fasciculata* (*fasciculata*)	Herbaceous Perennial	Up to 10(11)	1,2,3,4	March 1 - August 31,
Lance-leaf coreopsis	*Coreopsis lanceolata*	Herbaceous Perennial	Up to 10(11)	1,2,3,4	September 1 – May 1
Tall coreopsis	*Coreopteris tripteris*	Herbaceous Perennial	Up to 10(11)	1,2,3,4	September 1 – May 1
Boneset	*Eupatorium perfoliatum*	Herbaceous Perennial	Up to 10(11)	1,2,3,4	September 1 – May 1
Sneezeweed	*Helenium autumnale*	Herbaceous Perennial	Up to 10(11)	1,2,3,4	September 1 – May 1
Swamp sunflower	*Helianthus angustifolius*	Herbaceous Perennial	Up to 10(11)	1,2,3,4	March 1 - August 31,
Fringed loosestrife	*Lysimachia ciliata*	Herbaceous Perennial	Up to 10(11)	1,2,3,4	September 1 – May 1
Wild bergamot	*Monarda fistulosa*	Herbaceous Perennial	Up to 10(11)	1,2,3,4	September 1 – May 1
Mountain mint	*Pycnanthemum tenuifolium*	Herbaceous Perennial	Up to 10(11)	1,2,3,4	September 1 – May 1
Black-eyed susan	*Rudbeckia hirta*	Herbaceous Perennial	Up to 10(11)	1,2,3,4	September 1 – May 1
Goldenrod	*Solidago nemoralis*	Herbaceous Perennial	Up to 10(11)	1,2,3,4	September 1 – May 1
Butterfly Weed	*Aesclepias tuberose*	Herbaceous Perennial	Up to 10(11)	1,2,3,4	March 1 - August 31,

For native restoration and riparian mitigation seed mix combinations, use Table 4 for approved native herbaceous seed types in combination with Table 3 of native grass seeds. Native restoration and riparian seed mixes should incorporate a mix of 60% native grass types (see Table 3) and 40% native herbaceous types (see Table 4) applied at a minimum rate total of 10 (11) lbs per acre (kg/hectare) for each combined mix.

TABLE 5: TEMPORARY GRASS - SPECIES, SEEDING RATES AND PLANTING DATES

Species	Rates per 1000 sq. ft.	Rates per Acre	Planting Date By Zone		
			1 & 2	2	3 & 4
Rye (Grain)	3.9 lbs	168 lbs	8/1 - 11/30	8/15 - 12/1	9/1 - 2/28
Ryegrass	0.9 lbs	40 lbs	8/1 - 11/30	9/1 - 12/15	9/15 - 1/1
Rye & Annual Lespedeza	0.6 lbs 0.6 lbs	28 lbs 24 lbs	3/1 - 4/1	2/1 - 3/1	2/1 - 3/1
Weeping Lovegrass	0.1 lbs	4 lbs	3/15 - 6/15	3/15 - 7/15	3/15 - 7/15
Sudangrass	1.0 lbs	60 lbs	4/1 - 8/31	4/1 - 8/31	3/15 - 8/1
Browntop Millet	1.1 lbs	50 lbs	4/1 - 6/30	4/1 - 7/15	4/1 - 7/15
Wheat	3.9 lbs	168 lbs	9/1 - 12/31	9/1 - 12/31	9/15 - 1/31

When stage construction or other conditions prevent completing a roadway section continuously, apply temporary grassing to control erosion. Temporary grassing is used to stabilize disturbed areas for more than sixty (60) calendar days. Temporary grass may be applied any time of the year, utilizing the appropriate seed species and application rate as shown in the chart above. Apply mulch to areas planted in temporary grass at the rate of ¾ inch to 1.5 inches. Do not place slope mats on areas planted in temporary grass.

A. Ground Preparation

Prepare the ground by plowing under any temporary grass areas and preparing the soil as follows:

1. Slopes 3:1 or Flatter

   On slopes 3:1 or flatter, plow shoulders and embankment slopes to between 4 in and 6 in (100 mm and 150 mm) deep.

   Plow front and back slopes in cuts to no less than 6 in (150 mm) deep. After plowing, thoroughly disk the area until pulverized to the plowed depth.

2. Slopes Steeper Than 3:1

   Serrate slopes steeper than 3:1 according to Plan details when required.

   On embankment slopes and cut slopes not requiring serration (sufficient as determined by the Engineer), prepare the ground to develop an adequate seed bed using any of the following methods as directed by the Engineer:

   - Plow to a depth whatever depth is practicable.
   - Use a spiked chain.
   - Walk with a cleated track dozer.
   - Scarify.

   Disking cut slopes and fill slopes is not required.

3. All Slopes

   a. Obstructions

      Remove boulders, stumps, large roots, large clods, and other objects that interfere with grassing or may slide into the ditch.

   b. Topsoil

Spread topsoil stockpiled during grading evenly over cut and fill slopes after preparing the ground.

Push topsoil from the top over serrated slopes. Do not operate equipment on the face of completed serrated cuts.

4. Native Restoration Areas, Riparian Areas, Stream Restoration Areas, and Wetland and Stream Mitigation Areas.

   For Permanent Grassing in native restoration areas, multitrophic native planting areas, riparian areas, stream restoration areas, and wetland and stream mitigation areas, provide the minimum ground preparation necessary to provide seed to soil contact. Riparian areas may also be seeded using the no-till method. The no-till method is defined by planting permanent grass seeds using a drill-type seeder over existing vegetation without plowing or tilling soil. Ensure that existing vegetation is less than 3 inches in height (this may be achieved by mowing or using a mechanical string trimmer).

B. Grassing Adjacent to Existing Lawns

When grassing areas adjacent to residential or commercial lawns, the Engineer shall change the plant material to match the type of grass growing on the adjacent lawn. The Contract Unit Price will not be modified for this substitution.

C. Temporary Grassing

Apply temporary grassing according to Subsection 163.3.05.F. Determine lime requirements by a laboratory soil test. Refer to seeding Table 5 for species, amounts of seed and planting dates.

In March or April of the year following planting and as soon as the weather is suitable, replace all areas of temporary grass with permanent grass by plowing or overseeding using the no-till method. If the no-till method is used, ensure that temporary grass is less than 3 inches in height (this may be achieved by mowing). Additional mulch will be required only if the temporary grass does not provide adequate mulch to meet the requirements of Subsection 700.3.05.G, "Mulching".

Temporary grass, when required, will be paid for according to Section 163.

Projects that consist of asphalt resurfacing with shoulder reconstruction and/or shoulder widening: Type II Wood Fiber Blanket is used to stabilize disturbed areas, no till seeding will be used when permanent grassing is applied and the areas will not be re-disturbed.

D. Applying Agricultural Lime and Fertilizer Mixed Grade

Apply and mix lime and fertilizer as follows:

1. Agricultural Lime

   Uniformly spread agricultural lime on the ground at the approximate rate determined by the laboratory soil test.

   a. Agricultural Lime may be used as filler material in mixed grade fertilizer in lieu of inert material. The use of agricultural lime as filler material is to be shown on the fertilizer bag or invoice from the supplier. Do not deduct any amount of fertilizer when lime is used as filler.

2. Fertilizer Mixed Grade

   Uniformly spread the fertilizer selected according to Subsection 700.2.D over the ground or by use of hydroseeding.

   For bid purposes base estimated quantities on an initial application of 400 lb/acre of 19-19-19.

3. Mixing

   Before proceeding, uniformly work the lime and fertilizer into the top 4 in (100 mm) of soil using harrows, rotary tillers, or other equipment acceptable to the Engineer.

   On cut slopes steeper than 3:1, other than serrated slopes, reduce the mixing depth to the maximum practical depth as determined by the Engineer.

   Omit mixing on serrated slopes.

4. Native Restoration Areas, Multitropic Native Planting Areas, Riparian Areas, Stream Restoration Areas, and Wetland and Stream Mitigation Areas

   Omit the application of lime and fetilizer within riparian areas.

E. Seeding

Prepare seed and sow as follows:

1. Inoculation of Seed

   Inoculate each kind of leguminous seed separately with the appropriate commercial culture according to the manufacturer's instructions for the culture.

   When hydroseeding, double the inoculation rate.

   Protect inoculated seed from the sun and plant it the same day it is inoculated.

2. Sowing

   Weather permitting, sow seed within 24 hours after preparing the seed bed and applying the fertilizer and lime.

   Sow seed uniformly at the rates specified in the seeding tables. Use approved mechanical seed drills, rotary hand seeders, hydroseeding equipment, or other equipment to uniformly apply the seed. Do not distribute by hand.

   To distribute the seeds evenly sow seed types separately, except for similarly sized and weighted seeds. They may be mixed and sown together.

   Do not sow during windy weather, when the prepared surface is crusted, or when the ground is frozen, wet, or otherwise non-tillable.

3. Overseeding

   Temporary grass areas that were prepared in accordance with Subsection 700.3.05.A, may be overseeded using the no-till method. The no-till method is defined by planting permanent grass seeds using a drill-type seeder over existing temporary grass without plowing or tilling soil and in accordance with Subsection 700.3.05.C.

4. Riparian Seed Mix shall be used when specified in the Plans. A mix of at least three (3) species from Seeding Table 3 (Native Grasses) and at least two (2) species from Seeding Table 4 (Approved Riparian Mitigation - Herbaceous Plants). The seed, shall be applied as Permanent Grassing within those areas designated on the Plans. The kinds of seed, shall be used according to the appropriate Planting Dates given in the tables.

F. Hydroseeding

Hydroseeding may be used on any grassing area. Under this method, spread the seed, fertilizer, and wood fiber mulch in the form of a slurry. Seeds of all sizes may be mixed together. Apply hydroseeding as follows:

1. Use wood fiber mulch as a metering agent and seed bed regardless of which mulching method is chosen. Apply wood fiber mulch at approximately 500 lbs/acre (560 kg/ha).
2. Prepare the ground for hydroseeding as for conventional seeding in Subsection 700.3.05.A.
3. Use specially designed equipment to mix and apply the slurry uniformly over the entire seeding area.
4. Agitate the slurry mixture during application.
5. Discharge slurry within one hour after being combined in the hydroseeder. Do not hydroseed when winds prevent an even application.
6. Closely follow the equipment manufacturer's directions unless the Engineer modifies the application methods.
7. Mulch the entire hydroseeded area according to Subsection 700.3.05.F.1, above, and Subsection 700.3.05.G, below.

Native Restoration Areas, Multitropic Native Planting Areas, Riparian Areas, Stream Restoration Areas, and Wetland and Stream Mitigation Areas may be hydroseeded. When hydroseeding in these areas only use water, seed and wood fiber mulch.

G. Mulching

Except as noted in Subsection 700.3.05.B and Subsection 700.3.05.C, apply mulch immediately after seeding areas as follows:

Areas with permanent grass seed and covered with slope mats or blankets will not require mulch.

Evenly apply straw or hay mulch between 3/4 in and 1-1/2 in (20 mm and 40 mm) deep, according to the texture and moisture content of the mulch material.

Mulch shall allow sunlight to penetrate and air to circulate as well as shade the ground, reduce erosion, and conserve soil moisture. If the type of mulch is not specified on the Plans or in the Proposal, use any of the following as specified.

1. Mulch with Tackifier

   Apply mulch with tackifier regardless of whether using ground or hydroseeding equipment for seeding.

   a. Mulch uniformly applied manually or with special blower equipment designed for the purpose. When using a blower, thoroughly loosen baled material before feeding it into the machine so that it is broken up.

   b. After distributing the mulch initially, redistribute it to bare or inadequately covered areas in clumps dense enough to prevent new grass from emerging (if required).

      Do not apply mulch on windy days.

   e. Apply enough tackifier to the mulch to hold it in place. Immediately replace mulch that blows away.

      If distributing the mulch by hand, immediately apply the tackifier uniformly over the mulched areas.

      - Tackifier: Use a tackifier listed in the Laboratory Qualified Products Manual and apply at the manufacturer's recommended rates.

2. Walked-in-Mulch

   Apply walked-in-mulch on slopes ranging in steepness from 5:1 to 2:1 and treat as follows:

   a. Immediately walk it into the soil with a cleated track dozer. Make dozer passes vertically up and down the slope.

   b. Where walked-in-mulch is used, do not roll or cover the seeds as specified in Subsection 700.3.05.E.3.

3. Apply only wheat straw mulch on Riparian Areas, Stream Restoration Areas, and Wetland and Stream Mitigation Areas after they have been seeded. The wheat straw mulch is to be applied with a maximum thickness of 1 inch.

H. Sod

Furnish and install sod in all areas shown on the Plans or designated by the Engineer.

1. Kinds of Sod

   Use only Common Bermudagrass (Cyndon dactylon) or one of the following Bermudagrass varieties:

   - Tifway 419
   - Tifway II
   - Tift 94
   - Tifton 10
   - Midlawn
   - Midiron
   - GN-1
   - Vamont

   No dwarf Bermuda types shall be used. Sod shall be nursery-grown and be accompanied with a Georgia Department of Agriculture Live Plant License Certificate or Stamp. Sod shall consist of live, dense, well-rooted material free of weeds and insects as described by the Georgia Live Plant Act.

2. Type And Size Of Sod:

   Furnish either big roll or block sod. Ensure that big roll sod is a minimum of 21 inches wide by 52 feet long. Minimum dimensions for block sod are 12 inches wide by 22 inches long. Ensure all sod consists of a uniform soil thickness of not less than 1 inch.

3. Ground Preparation

   Excavate the ground deep enough and prepare it according to Subsection 700.3.05.A to allow placing of sod. Spread soil, meeting the requirements of Subsection 893.2.01, on prepared area to a depth of 4 inches.

4. Application of Lime and Fertilizer

   Apply lime and fertilizer according to Subsection 700.3.05.D within 24 hours prior to installing sod.

5. Weather Limitation

Do not place sod on frozen ground or where snow may hinder establishment.

6. Install Sod

   Install Sod as follows:

   - Place sod by hand or by mechanical means so that joints are tightly abutted with no overlaps or gaps. Use soil to fill cracks between sod pieces, but do not smother the grass.
   - Stake sod placed in ditches or slopes steeper than 2:1 or any other areas where sod slipping can occur.
   - Use wood stakes that are at least 8 in (200 mm) in length and not more than 1 in (25 mm) wide.
   - Drive the stakes flush with the top of the sod. Use a minimum of 8 stakes per square yard (meter) to hold sod in place.
   - Once sod is placed and staked as necessary, tamp or roll it using adequate equipment to provide good contact with soil.
   - Use caution to prevent tearing or displacement of sod during this process. Leave the finished surface of sodded areas smooth and uniform.

7. Watering Sod

   After the sod has been placed and rolled or tamped, water it to promote satisfactory growth. Additional watering will be needed in the absence of rainfall and during the hot dry summer months. Water may be applied by Hydro Seeder, Water Truck or by other means approved by the Engineer.

8. Dormant Sod

   Dormant Bermuda grass sod can be installed. However, assume responsibility for all sod through establishment and until final acceptance.

9. Establishment

   Sod will be inspected by the Engineer at the end of the first spring after installation and at the time of Final Inspection. Replace any sod that is not live and growing. Any cost for replacing any unacceptable sod will be at the Contractor's expense.

I. Application of Nitrogen

Apply nitrogen at approximately 50 lbs/acre (56 kg/ha) when specified by the Engineer after plants have grown to 2 inches (50 mm) in height.

One application is mandatory and must be applied before Final Acceptance.

Apply nitrogen with mechanical hand spreaders or other approved spreaders capable of uniformly covering the grassed areas. Do not apply nitrogen on windy days or when foilage is damp.

Do not apply nitrogen between October 15 and March 15 except in Zone 4.

1. Native Restoration Areas, Multitropic Native Planting Areas, Riparian Areas, Stream Restoration Areas, and Wetland and Stream Mitigation Areas

   Do not apply nitrogen to these areas.

J. Application of Polyacrylamide (PAM)

1. Prepare soil according to project Plans and Specifications prior to applying PAM.
2. Apply PAM according to manufacturer's recommendations and the requirements listed herein.
3. Apply Polyacrylamide (PAM) to all areas that receive permanent grassing.
4. Apply PAM (powder) before grassing or PAM (emulsion) to the hydroseeding operation.
5. Use only anionic PAM.
6. Ensure that the application method provides uniform coverage to the target and avoids drift to non-target areas including waters of the state.

7. Achieve > 80% reduction in soil loss as measured by a rainfall simulator test performed by a certified laboratory (1 hour storm duration, 3 inches (75 mm) rainfall per hour).
8. Ensure uniform coverage to the target area and minimize drift to non-target areas. Apply anionic PAM to all cut and fill slopes, permanently grassed or temporarily grassed, either prior to grassing or in conjunction with hydroseeding operations. Mulch will not be eliminated.
9. Use application rates in accordance with manufacturer's instructions.
10. Do not exceed 200 lbs/acre/year (224 kg/ha/year).
11. Do not include polyacrylamide when planting in Riparian Areas, Stream Restoration Areas, and Wetland and Stream Mitigation Areas

700.3.06 Quality Acceptance

The Engineer may require replanting of an area that shows unsatisfactory growth for any reason at any time.

Except as otherwise specified or permitted by the Engineer, prepare replanting areas according to the Specifications as if they were the initial planting areas. Use a soil test or the Engineer's guidance to determine the fertilizer type and application rate, then furnish and apply the fertilizer.

700.3.07 Contractor Warranty and Maintenance

A. Plant Establishment

Before Final Acceptance, provide plant establishment of the specified vegetation as follows:

1. Plant Establishment

   Preserve, protect, water, reseed or replant, and perform other work as necessary to keep the grassed areas in satisfactory condition.
2. Watering

   Water the areas during this period as necessary to promote maximum growth.
3. Mowing

   Mow seeded areas of medians, shoulders, and front slopes at least every 6 months. Avoid damaging desirable vegetation.

   In addition, mow as necessary to prevent tall grass from obstructing signs, delineation, traffic movements, sight distance, or otherwise becoming a hazard to motorists.

   Do not mow lespedezas or tall fescue until after the plants have gone to seed.
4. Do not mow riparian areas, stream restoration areas, or wetland and stream mitigation areas after planting.

B. Additional Fertilizer Mixed Grade

Apply fertilizer based on the initial soil test report at half the recommended rate each spring after initial plant establishment. For bid purposes apply 200 lbs/acre of 19-19-19. Continue annual applications until Final Acceptance. This additional fertilizer will be measured and paid for at the Contract Unit Price for fertilizer mixed grade.

Do not apply additional fertilizer to Native Restoration Areas, Multitropic Native Planting Areas, Riparian Areas, Stream Restoration Areas, and Wetland and Stream Mitigation Areas.

C. Growth and Coverage

Provide satisfactory growth and coverage, ensuring that vegetation growth is satisfactory with no bare spots larger than1 ft^2 (0.1 m^2). Bare spots shall comprise no more than 1 percent of any given area. An exception is given for seed not expected to have germinated and shown growth at that time.

D. Permissible Modifications

When all Items of the work are ready for Final Acceptance except for newly planted repaired areas or other areas with insufficient grass, the Contractor may fill the eroded areas or treat bare areas with sod obtained, placed, and handled according to Subsection 700.3.05.H.

Carefully maintain the line and grade established for shoulders, front slopes, medians, and other critical areas.

Sod as described above will not be paid for separately, but will be an acceptable substitute for the satisfactory growth and coverage required under this Specification. These areas treated with sod are measured for payment under the Item for which the sod is substituted.

700.4 Measurement

A. Permanent Grassing

Permanent Grassing will be measured for payment by the acre (hectare).

B. Mulches

Straw or hay mulch applied to permanent grassing areas will be measured by the ton (megagram). Wood fiber mulch furnished by the Contractor for permanent grassing is not measured for separate payment.

C. Quantity of Sod

Sod is measured for payment by the number of square yards (meters) , surface measure, completed and accepted.

D. Water

Water furnished and applied to promote a satisfactory growth is not measured for payment.

E. Quantity of Lime and Fertilizer Mixed Grade

Lime and fertilizer are measured by the ton (megagram). Lime used as a filler in fertilizer is measured by the ton (megagram).

F. Quantity of Nitrogen Used for Permanent Grassing

Nitrogen is measured in pounds (kilograms) based on the weight of fertilizer used and its nitrogen content.

G. Replanting and Plant Establishments

No measurement for payment is made for any materials or work required under Subsection 700.3.06 and Subsection 700.3.07.

H. Temporary Grass

Temporary grass is measured for payment by the acre (hectare) according to Section 163.

I. Seeded Native Restoration Areas, Multitropic Native Planting Areas, Riparian Areas, Stream Restoration Areas, and Wetland and Stream Mitigation Areas

Seeded Native Restoration Areas, Multitropic Native Planting Areas, Riparian areas, Stream Restoration area, and Wetland and Stream Mitigation areas will be measured by the acre (hectare). and included under the pay item “Native Restoration and Riparian Seeding”.

700.4.01 Limits

General Provisions 101 through 150.

700.5 Payment

As grassing and planting progress, the Contractor will receive full measurement and payment on regular monthly estimates provided the work complies with the Specifications.

A. Permanent Grassing

Permanent grassing will be paid for at the Contract Price per acre (hectare), complete and in place. Payment is full compensation for preparing the ground, seeding, wood fiber mulch, polyacrylamide, and providing plant establishment, soil tests and other incidentals.

B. Straw or Hay Mulch

Straw or hay mulch required for Permanent Grassing will be paid for according to Section 163.

C. Fertilizer Mixed Grade

Fertilizer mixed grade will be paid for at the Contract Price per ton (megagram). Payment is full compensation for furnishing and applying the material.

D. Lime

Lime will be paid for at the Contract Price per ton (megagram). Lime used as filler in fertilizer will be paid for per ton (megagram). Payment is full compensation for furnishing and applying the material.

E. Nitrogen

Nitrogen will be paid for at the Contract Price per pound (kilogram) of nitrogen content. Payment is full compensation for furnishing and applying the material.

F. Sod

Sod will be paid by the square yard (meter) in accordance with the following schedule of payments. Payment is full compensation for ground preparation, including addition of topsoil, furnishing and installing live sod, and for Plant Establishment.

1. 70% of the Contract Price per square yard will be paid at the satisfactory completion of the installation.
2. 20% of the Contract Price will be paid upon satisfactory review of sod which is healthy, weed free and viable at the inspection made at the end of the first spring after installation.,.
3. 10% of the contract price will be paid upon satisfactory review of sod that is healthy, weed free and viable at the Final Acceptance.

G. Temporary Grass

Temporary Grass will be paid for under Section 163.

H. Seeded Native Restoration Areas, Multitropic Native Planting Areas, Riparian Areas, Stream Restoration Areas, and Wetland and Stream Mitigation Areas

Seeded Native Restoration Areas, Multitropic Native Planting Areas, Riparian areas, Stream Restoration area, and Wetland and Stream Mitigation areas will be paid for at the Contract Price per acre (hectare), complete and in place. Payment is full compensation for preparing the ground, seeding, and providing plant establishment and other incidentals. and included under the pay item “Native Restoration and Riparian Seeding”.

Payment will be made under:

Item No. 700	Permanent grassing	Per acre (hectare)
Item No. 700	Agricultural lime	Per ton (megagram)
Item No. 700	Fertilizer mixed grade	Per ton (megagram)
Item No. 700	Fertilizer nitrogen content	Per pound (kilogram)
Item No. 700	Sod	Per square yard (meter)

Item No. 700	Native Restoration and Riparian Seeding	Per acre (hectare)

700.5.01 Adjustments

General Provisions 101 through 150.

Section 701—Wildflower Seeding

701.1 General Description

This work includes preparing the ground, furnishing and planting wildflower and companion grass seeds, applying fertilizer, and applying lime, if necessary, to areas designated on the Plans.

701.1.01 Definitions

General Provisions 101 through 150.

701.1.02 Related References

A. Standard Specifications

Section 882—Lime

Section 890—Seed and Sod

Section 891—Fertilizers

B. Referenced Documents

General Provisions 101 through 150.

701.1.03 Submittals

General Provisions 101 through 150.

701.2 Materials

A. General

Use materials that meet the requirements of the following Specifications:

Material	Specification
Agricultural Lime	882.2.01
Companion Grass Seed	890.2.01
Fertilizers	891.2.01

B. Wildflower Seed

Use seed from the latest season’s crop.

Use seed that meets the minimum germination rates listed in the Wildflower Seeding Table with 98 percent seed purity and 0.5 percent weed seed. Proportion seed mixture according to the Wildflower Seeding Table.

Wildflower Seeding Table

Approx. % by Weight	Botanical Name	Common Name	% Germinantion
1.5	Achillea millefolium	White Yarrow	50
5.0	Centaurea cyanus	Cornflower	60
5.0	Chamecrista fasicu lata	Partridge Pea	N/A
10.0	Coreopsis lanceolata	Lance-leaved Coreopsis	40
10.0	Coreopsis tinctoria	Plains Coreopsis	65
5.0	Delphinium ajacis	Rocket Larkspur	60
5.0	Escholzia californica	California Poppy	60
5.0	Gaillardia aristata	Perennial Gaillardia	45
10.0	Gaillardia pulchella	Annual Gaillardia	45
2.5	Monarda citriodora	Lemon Mint	40
10.0	Nemonphila men ziesii	Baby Blue Eyes	70
1.0	Oenothera speciosa	Pink Primrose	N/A
2.0	Papaver rhoeas	Corn Poppy	60
10.0	Rubeckia hirta	Black-Eyed Susan	60
5.0	Salvia farinacea	Blue Sage	40
3.0	Solidago spp.	Goldenrod	N/A
10.0	Trifolium incarnatum	Crimson Clover	80
100% total mixplant at a rate of 12 lbs/acre (13 kg/ha)			

C. Companion Grass

Apply nurse or companion grass as follows:

Planting Season	Grass	Rate per Acre (Hectare)
October 1 to February 28	Tall Fescue	5 lbs (5.5 kg)

D. Fertilizer Mixed Grade

Select fertilizer mixed grade such as 10-10-10, 6-12-12, 5-10-15, or any other analysis within the following limits:

Nitrogen 5 to 10 percent, phosphorus 10 to 15 percent, and potassium 10 to 15 percent

701.2.01 Storage, Delivery, and Handling

Use seed delivered in original sealed packages bearing the producer’s guaranteed analysis for percentages of species mixture, minimum germination rates, and purity of seed.

701.3 Construction Requirements

701.3.01 Personnel

General Provisions 101 through 150.

701.3.02 Equipment

Use approved mechanical seed drills, drop spreaders, and rotary spreaders to distribute seed.

701.3.03 Preparation

A. Planting Limits

Before preparing the ground, stake planting limits according to the Plans and as approved by the Engineer.

701.3.04 Fabrication

General Provisions 101 through 150.

701.3.05 Construction

A. Ground Preparation

Prepare the ground as follows:

1. Plow between 4 in to 6 in (100 mm to 150 mm) deep.
2. After plowing, thoroughly disk the area until pulverized, then smooth the surface.
3. Remove large clods, boulders, stumps, rocks, and other foreign particles that will interfere with the work and seedling growth.
4. Wait 2 weeks after preparation, then spray new growth with 1 gal per acre (9 L per hectare)of Roundup™ herbicide.
5. Wait at least 10 days before proceeding.

B. Application of Lime and Fertilizer Mixed Grade

Apply lime and fertilizer as follows:

1. Lime

   Uniformly spread agricultural lime on the ground at the approximate rate determined by the Engineer. If the pH is 6.0 or higher, no lime is required.
2. Fertilizer Mixed Grade

   Spread the fertilizer, mixed according to Subsection 701.2.D, uniformly over the ground at approximately 200 lbs/acre (225 kg/ha).
3. Mixing

   Before doing further work on the area, blend the lime and fertilizer uniformly into the top 4 in (100 mm) of soil using harrows, rotary tillers, and other equipment approved by the Engineer.

C. Seeding

Weather permitting, sow seed within 24 hours of applying the fertilizer and lime to the seed bed as follows:

1. Sow seed uniformly according to the rate specified in Subsection 701.2.B. Use approved mechanical seed drills or mix seed with dry sand and spread it with either a drop spreader or rotary spreader.
2. Cover the seed to no more than 1/8 in (3 mm) deep.
3. After seeding, roll the area with a cultipacker or similar equipment to ensure good soil contact for seedling germination.

D. Mulching

After rolling the seed bed, apply 1 ton per acre (2 Mg per hectare) of wood fiber mulch.

701.3.06 Quality Acceptance

A. Replanting

The Engineer may require replanting an area that shows unsatisfactory growth.

Except as otherwise specified by the Engineer, prepare replanting areas the same as the initial planting with the following exception:

- Use a soil test or the Engineer's guidance to determine the fertilizer type and application rate, then furnish and apply the fertilizer.

B. Providing Growth and Coverage

Ensure that wildflower growth and coverage conforms with the intent of the Contract for the vegetation, except for seed not expected to germinate and show growth at that time.

Ensure that vegetation shows a satisfactory visible growth with no bare spots larger than 1 ft^2 (0.1 m^2). Bare spots shall be infrequent, comprising no more than 1 percent of a given area.

701.3.07 Contractor Warranty and Maintenance

A. Plant Establishment

Preserve, protect, water, reseed or replant, and perform other work as necessary to keep the wildflower areas in satisfactory condition.

B. Watering

Keep planted areas moist for 4 to 6 weeks during seedling germination and development.

Following initial growth, water the wildflower areas enough to promote maximum growth.

C. Mowing

Mow once a year in late fall after seedheads have matured. Avoid damaging desirable vegetation.

701.4 Measurement

A. Wildflower Seeding

The number of acres (hectares) completed according to the above requirements and accepted by the Engineer is measured for payment.

B. Wood Fiber Mulch

Mulch furnished and applied is not measured separately.

C. Water

Water furnished and applied to promote a satisfactory growth is not measured for payment.

D. Agricultural Lime

Lime is measured by the ton (megagram).

E. Mixed Grade Fertilizer

Fertilizer is measured by the pound (kilogram).

701.4.01 Limits

Work required under Subsection 701.3.06 and Subsection 701.3.07 is not measured for payment.

701.5 Payment

Wildflower seeded areas will be paid for as follows:

A. Wildflower Seeding

When plants are satisfactorily planted, 80 percent of the Contract Unit Price bid per acre (hectare) will be paid on the next estimate.

Until Final Acceptance, perform required maintenance according to Subsection 701.3.07 when necessary or as ordered by the Engineer.

At Final Acceptance, the remaining 20 percent will be paid. Payment is full compensation for preparing ground, providing wildflower and companion grass seed, applying seed, watering, mulching, and establishing plants.

B. Mixed Grade Fertilizer

Fertilizer will be paid for at the Contract Price per pound (kilogram). Payment is full compensation for furnishing and applying the material.

C. Lime

Lime will be paid for at the Contract Price per ton (megagram). Payment is full compensation for furnishing and applying the material.

Payment will be made under:

Item No. 701	Wildflower seeding	Per acre (hectare)
Item No. 701	Fertilizer mixed grade	Per pound (kilogram)
Item No. 701	Agricultural lime	Per ton (megagram)

701.5.01 Adjustments

General Provisions 101 through 150.

Section 702—Vine, Shrub, and Tree Planting

702.1 General Description

This work includes furnishing and planting vines, shrubs, trees and plants, treating regenerated areas, and environmental mitigation planting for riparian buffers and tidal marsh areas.

702.1.01 Definitions

General Provisions 101 through 150.

702.1.02 Related References

A. Standard Specifications

Section 108—Prosecution and Progress

Section 214—Mitigation Site Construction

Section 700—Grassing

Section 882—Lime

Section 891—Fertilizers

Section 893—Miscellaneous Planting Materials

B. Referenced Documents

Standardized Plant Names

ANSI A300 Part 1 Pruning Standards

ANSI Z60.1 American Standards for Nursery Stock

702.1.03 Submittals

A. Certificates of Inspection

Submit certificates of inspection with the invoice for each shipment of plants as required by law for transportation.

File certificates with the Engineer before the material is accepted. Plants may be rejected at the site regardless of Federal or State government inspections at the place of growth.

B. Substitutions

When both primary and alternate plants are specified, use the alternate only after providing written proof that the primary plants specified are not available. In this case a Supplemental Agreement is not required to use the alternate plants.

When a primary or an alternate plant cannot be furnished, provide the Engineer written proof that neither is available. A Supplemental Agreement is required for substitute plants in this case.

Use approved substitute plants, as designated by the Engineer, equal in value to specified plants. Request substitutions at least thirty (30) days before the end of the planting season in the area.

702.2 Materials

Ensure that materials meet the requirements of the following Specifications:

Material	Section
Water	700.2.B
Agricultural Lime	882.2.01
Fertilizers	891.2.01
Plant Topsoil	893.2.01
Landscape Mulch	893.2.02
Vines, Shrubs, Trees, and Miscellaneous Plants	893.2.03
Tree Paint	893.2.06
Prepared Plant Topsoil	893.2.07
Stakes	893.2.08
Organic Soil Additives	893.2.09

A. Plant Specifications

Furnish plants according to the plant name and Specifications included on the plan sheets.

1. Plant Names

Ensure that the botanical and common names of plants specified conform to the most current edition of Standardized Plant Names, as adopted by the American Joint Committee on Horticultural Nomenclature.

2. Plants should be clearly labeled at the nursery. Labels should remain on the plants until inspected by the engineer.
3. Grades

   Ensure that plants meet the grade requirements of the most current American Nursery and Landscape Association ANSI Z60.1 and any other requirements.

   Caliper used for establishing plant grades or trunk sizes is measured according to the American Nursery and Landscape Association ANSI Z60.1. Plant trees with straight stems and symmetrical branches according to their natural growth. Trees with broken or damaged terminal or main stems will be rejected. There shall be a single dominant leader to the top of the all large canopy shade trees. There can be a double leader in the top 10% of the tree height.

   Trees should be rooting into the root ball so that soil or media remains intact and trunk and root ball move as one when lifted, but not root bound. The trunk should bend when gently pushed and should not be loose so it pivots at or below the soil line.

   There shall be no roots greater than 1/10 diameter of the trunk circling more than one-third the way around in the top half of the root ball. Roots larger than this may be cut provided they are smaller than one-third the trunk diameter.

   The leaf-bearing crown should be full and uniform. Leaves should show no evidence of chlorosis, necrosis, disease or insect infestation.

B. Bare root seedlings

Use nursery-grown bare root seedlings which are a minimum of three (3) feet (1 meter) in height above the ground with a 1/4 inch (6.35mm) caliper, and a minimum primary root length of five inches (5) unless specified differently on the plan drawings.

Use approved substitute plants, as designated by the Engineer, equal in value to specified plants. Request substitutions at least 30 calendar days before the end of the planting season in the area. Wet swale bare root *Juncus effuses* shall be fresh divisions with a full, dense root base.

C. Nursery Plants

Unless otherwise specified, use plants stock-grown in a licensed nursery under intensive care and cultivation for at least one year. The largest branches of shade trees should be spaced at least 6 inches apart. The branch system shall be normally developed and free of disease, injurious insects, disfiguring knots, sun-scald, injuries, bark abrasions, dead or dry wood, broken terminal growth, or other disfigurements. Stems should show no evidence of die-back. Ensure that proper certificates of inspection and a complete list of the nursery growers accompany nursery grown plants. See Subsection 893.2.03.

D. Approval and Selection of Materials and Work

Select materials and execute operations required under the Specifications and drawings with the approval of the Engineer. Remove rejected materials from the site promptly.

702.2.01 Delivery, Storage, and Handling

A. Bare-Rooted Plants

Protect bare root plants from drying out until planted. Uncovered roots without moisture-loss gel coating shall be exposed to air no longer than 15 minutes.

B. Balled and Burlapped Plants (B&B)

1. Burlap shall be a natural biodegradable material. Do not use synthetic burlap.
2. Replace plants rejected because of broken or loose balls, or balls of less diameter than that specified.

3. Protect the roots of balled and burlapped plants from moisture loss, unless they are planted immediately after they are delivered.
4. Plants shall be harvested with the ball of earth in which they are growing intact.

C. Container-Grown Plants

Keep container-grown plants moist but well drained until planted. Handle plants by the container or soil ball and not by the top growth.

D. Heeled-in Plants

Properly maintain heeled-in plants until they are planted. Do not allow plants to remain heeled-in over the summer or for over 30 days without the Engineer's consent.

E. Injury Prevention

Injured plants will be rejected. Protect tops of shrubs and trees while in transit to prevent windburn.

F. Live Willow Stake Material

Live stakes shall be moistened, capable of rooting, without injury and stripped of all stems and leaves with a minimum of scarring. The stakes shall be from 5 to 8 feet (1.5m to 2.4m) in length with a basal end of 0.5 to 1.5 inches (1.27cm to 3.8cm) in diameter. The top ends shall be blunt and cut square and the butt ends angled.

702.3 Construction Requirements

702.3.01 Personnel

General Provisions 101 through 150.

702.3.02 Equipment

General Provisions 101 through 150.

702.3.03 Preparation

A. Inspect Plant Material before Digging

The Engineer will inspect trees or plants from the bidder's source for acceptability and conformity to specification requirements for approval by the Engineer. When rejecting the trees or plants, the Engineer reserves the right to pursue and examine other sources of plants to find acceptable specimens. This change will not constitute an increase in cost to the State.

B. Clear and Grub

Clear and grub the planting area before planting or beginning to prepare the plant bed, unless noted differently on the plans. See Section 201.

C. Prepare Plant Bed

Prepare for planting as follows:

1. Planting Limits

   Stake planting limits according to Plan details and the Engineer. Have the Engineer approve the method of plant identification before planting.

   For median plantings, keep any woody plant a minimum of 3 feet (1m) from the edge of the plant bed to avoid vegetative growth into the roadway.

For stream buffers identified as “Stream Buffer” or “wet swales”, on plans, the plant species shall be planted in a random, intermixed manner throughout the entire planting area. At the edges of the planting zone, keep new plants a minimum of 8 feet (2.4m) from existing trees or permanent structures.

2. Applications of Soil Additives
   a. Apply fertilizer and lime to the plant bed according to the soil test report.
   b. Spread an organic soil additive, (See Subsection 893.2.09), evenly throughout the designated area to at least 2 in (50 mm) deep. Thoroughly dig it into the soil to at least 6 in (150 mm) deep using a rotary hoe type tiller or other equipment that evenly mixes the soil, lime, fertilizer, and organic soil additive.
   c. Till the area until the surface is smooth and free of weeds, roots, rocks, and other debris, to the satisfaction of the Engineer.
   d. If the planting area lies within a multitrophic native planting area, stream buffer, wetland, wet swale, or marsh the addition of fertilizer or lime is prohibited.

702.3.04 Fabrication

General Provisions 101 through 150.

702.3.05 Construction

A. Seasonal Limitations for Planting

For geographic seasonal limitations, refer to the Planting Zones Map found in Subsection 700.3.05. Plant in Zones 1 and 2 between October 15 and March 15. Plant in Zones 3 and 4 between November 1 and January 1.

B. Planting Operations

Plant using the method called for on the details and plan sheets. Before beginning planting of each area, have available the necessary materials including prepared plant topsoil (see Subsection 893.2.07), water, stakes, and mulch. Plants shall be installed as straight/upright as possible. Any plants found to be leaning or broken will not be accepted or paid for by the engineer.

When seasonal limitations and weather conditions permit, continuously water, mulch, guy, provide tree guards, and stake as indicated on the plans and details until completing the last operation.

After completing planting, provide a method for retaining water adjacent to the plant according to the details shown on the Plans or as directed by the Engineer.

Protect marsh restoration areas from vehicles and machinery. Typical protective barriers are not to be used in tidal areas. Stakes that remain secure and are taller than the highest tide, flagged with highly visible flagging tape, are required to mark the area to be protected and off-limits for vehicles and machinery.

1. Planting By the Pit Method
   a. Placing Bare-Rooted Plants

      Plant bare-rooted plants delivered to the pit area. Protect roots from drying out until placing them in the pit.

      1. Center plants in pits and spread roots as they originally grew.
      2. Cover and prepare the topsoil according to details shown on the Plans.

   b. Placing Balled and Burlapped Plants

      Immediately plant these plants after they are delivered to the pit site.

      1. The pit diameter shall be a minimum of 3 times the diameter of the rootball. Center the ball in the prepared pit, leaving the top of the ball 1 in (25 mm) above the top of the ground for settlement.
      2. Cut away and remove the top 1/3 of burlap from the rootball. Cut all ropes and twine, pull the nails, and drop the remaining burlap to the bottom of the hole. Cut away and remove all wire from the root ball.
      3. Partially fill the pit with prepared plant topsoil and compact the soil enough to hold the ball firmly. Add mycorrhizal innoculant to plant topsoil if specified in plans.

c. Placing Container-Grown Plants

When the container is delivered to the pit site, split the container from top to bottom and carefully remove the plant.

1. The pit diameter shall be a minimum of 3 times the diameter of the rootball. Spread into the hole any major roots growing around the container or prune them to remove any circular growth.
2. Place the ball in the center of the prepared pit, leaving the top of the ball 1 in (25 mm) above the top of the ground for settlement.
3. Partially fill the pit with prepared plant topsoil and compact the soil enough to hold the ball firmly. Add mycorrhizal innoculant to plant topsoil if specified in plans.

d. Completing Pit Plantings

After placing pit plantings, water plants thoroughly the same day regardless of weather or soil moisture conditions.

1. After the water has soaked in, add prepared plant topsoil and compact firmly up to 2 in (50mm) below the adjacent ground.
2. Stop compacting when the compacted prepared topsoil is 2 in (50 mm) below the adjacent ground.
3. Fill the remainder of each pit with loose, prepared plant topsoil according to the details shown on the Plans.
4. Prepare the loose topsoil to retain water adjacent to the plant according to the Plans or as directed by the Engineer.

e. Live Stake Plantings

1. Plant live willow stakes at four (4) ft (1.2m) intervals or as indicated on the drawings with the buds facing upward.
2. Eighty (80) percent of the stake shall be installed below ground, leaving twenty (20) percent extending above ground.
3. Stakes shall be placed deep enough to reach the water table during the dry season at an angle perpendicular to the slope.
4. Pack soil firmly around the hole after installation.
5. Install live willow (*Salix spp.)* stakes only in the dormant season, according to the planting details and landscape plan notes.
6. Replace any live stakes that split during installation.

2. Planting using a Dibble, Hoedad, or Reinforced Planting Shovel for Wet Swale and Bare Root Seedlings.

Planting shall only be done when there is adequate moisture in the ground and when the ground is not frozen.

Provide proper root positioning and contact with the soil, and eliminate all air pockets around roots. Roots of seedlings shall not be pinched or bent in a sideways or upturned direction.

Each tree, division, or seedling shall be inserted into the hole such that the root collar of the tree will be at ground level after backfilling is complete. Allowance for burying the root collar below ground level shall not exceed one-half inch in depth. In no case shall planting result in the root collar remaining above ground level. The soil back-filled around the root system shall be compacted sufficiently to support the plant. Mow or use a string trimmer to a height of 1 in (25 mm) in the area designated for restoration. Do not trim wet swales or retention basins where standing water is present.

Grass the area designated for restoration with a native restoration or riparian seed mix and apply wheat straw mulch to the area before planting seedlings.

Plant within 48 hours after mowing or string trimming the site.

3. Restoration and enhancement of tidal marsh areas are subject to possible wave energy, requiring the use of a plant anchor for each plant. See planting plan sheets and details for plant anchor and anchoring descriptions.

C. Landscape Mulching

1. For Pit Plantings

Follow these requirements when mulching for pit plantings:

a. Where the distance between plants is 8 ft (2.4 m) or less, spread mulch throughout and 3 ft (900 mm) beyond the outermost plants. Where plants are more than 8 ft (2.4 m) apart, apply mulch in a circular fashion around each plant, forming a ring 5 ft (1.5 m) in the outside diameter.

b. If plant pits are greater than 5 ft (1.5 m) in diameter, ensure that the mulch extends out to cover the berm as shown in the planting details on the Plans.

c. Apply mulch within 3 days of planting at least 4 in (100 mm) in depth to obtain a compacted depth of at least 3 in (75 mm).

d. Compaction occurs naturally. Check compaction at least two months after spreading and exposing the mulch to the elements.

e. If the compacted depth is less than 3 in (75 mm), apply additional mulch to deficient areas within 1 month following notification.

f. Apply mulch to a uniform depth and remove lumps for a neat appearance. Tuck mulch neatly against all paving edges, drainage structures, and where planting beds meet grassed areas.

g. Leave a 1 in (25 mm) to 2 in (50 mm) ring of non-mulched area directly around all tree trunks.

h. Do not mulch with Cypress Mulch.

2. For Plantings using a Dibble, Hoedad, or Reinforced Shovel

   Apply landscape mulch according to Subsection 702.3.05.C.1 with the following exceptions:

   a. Apply mulch before planting.

   b. Use only wheat straw mulch in restoration areas.

   c. Ensure that the mulch coverage is open enough to allow seed germination to take place and dense enough to conserve moisture in the seed bed.

3. For Native Multitrophic or Stream Buffer Restoration Planting Areas, wheat straw shall be the only types of mulch used.

4. Do not use mulch in a tidal marsh area. Do not mulch wet swale or retention ponds where standing water is present.

D. Wrapping

Do not wrap the trucks of tree unless specified in the plans. When wrapping is specified, tightly wrap the trunks of deciduous trees over 1.25 in (32 mm) in caliper. Wrap in strip burlap or waterproof crepe tree wrapping paper or other approved materials.

1. Begin wrapping at the ground and extend spirally up and beyond the first rosette of branches with an overlap of one half the width of the wrapping material.

2. Tie the wrapping material securely with binder twine spaced every 12 in (300 mm) for the full length of the wrapping. Wrap immediately after planting.

E. Staking and Guying

1. Do not use staking and guying unless specified in the plans or details.

2. Perimeter Staking

3. Place perimeter stakes 2 in x 2 in x 36 in (50 mm x 50 mm x 900 mm). Stake the perimeter of indicated regenerated areas within specified planting dates according to the Plans or as directed by the Engineer. Keep staking for tidal marsh areas secured with supports taller than the highest tide with highly visible flagging tape to mark the area as off-limits for vehicles and machinery.

4. Vine, Shrub, and Miscellaneous Plant Staking

5. Use stakes to identify isolated vines, shrubs, and miscellaneous plants outside of solid mulched beds according to Plan details.

6. Tree Staking and Guying

7. Stake trees using a system that will prevent trees from leaning or tilting and keep the root ball stable until the roots become anchored. The system should allow the top some movement and flexibility without damaging the tree.

F. Pruning

1. Prune plants on the site before planting and after initial inspection by the Engineer as needed for the health of the plant. Never prune severely to get plants to meet Specifications.
   a. Follow ANSI A300 Part 1 standards and use approved tools designed for pruning.
   b. Lopping, topping, or shearing trees or shrubs is not permitted.
   c. Prune back damaged, scarred, frayed, split, and skinned branches, limbs, and roots to live wood nearest to the next sound, outside lateral bud, branch, limb, or root.
   d. Leave the terminal leaders or buds in trees intact.
   e. Prune roots, when necessary, as directed by the Engineer.
   f. Prune Crape Myrtles to maintain natural form only. Severely cutting back or stump pruning crape myrtles is not permitted. Remove sucker growth from Crape Myrtles.
   g. Damaged, scarred, frayed, split and skinned branches, limbs and roots shall be pruned back to live wood nearest to the next viable outside lateral bud, branch, limb or root.

G. Watering

1. Apply water in a manner to prevent erosion. Water plants deeply and thoroughly at the time of planting. Water after applying fertilizer called for in Subsection 702.3.05.H and as necessary to maintain enough moisture to promote plant growth. Use water reservoir bags if specified in plans or details.
   a. Apply enough water to wet the soil to a depth slightly below the roots. Direct the water to the ground around the plant, not the tops.
   b. Do not allow plant foliage to dry out or plants to defoliate from lack of water. Remove plants in such condition from the site immediately. Apply supplemental watering to maintain vigorous growth and to keep plants moist and as directed by the Engineer.
   c. Apply water once per week throughout the planting season in which the plants are installed. Follow Subsection 702.3.07.B and 702.3.07.C for shrub and tree watering requirements throughout the life of the project.

H. Spring Application of Fertilizer

1. Method and Rate of Application

   Follow these requirements when applying fertilizer in the spring:

   a. Trees

      Apply a slow-release fertilizer according to soil test results. Assume 8-12-12 with a rate of 1 cup (0.25 L) per caliper inch of tree for bidding purposes.

   b. Shrubs and vines

      Fertilize shrubs according to soil test results with a slow release fertilizer by spreading fertilizer around the base of the plant and working it into the soil by hand. Assume 6-12-12 with a rate of 0.5 cup (0.12 L) per foot of shrub height for bidding purposes.

      Bed Areas

      Spread fertilizer on bed areas (defined by method of planting in Subsection 702.3.05.B), over the mulch according to soil test results. Assume 3 lbs/100ft2 of 6-12-12 for bidding purposes. Thoroughly water in the plants.

   c. Native Restoration or Stream Buffer Areas

      The addition of fertilizer or lime is prohibited within the native restoration or stream buffer planting areas.

   d. Tidal March Areas

      The addition of fertilizer or lime is prohibited within marsh areas.

2. Time of Spring Fertilizer Application

Apply fertilizer in the spring in Zones 1 and 2 (with reference to the Planting Zones specified in Subsection 702.3.05.A) between April 1 and April 15. Apply between March 15 and April 1 for Zones 3 and 4.

For late plantings, do not apply fertilizer less than 30 days after the plantings.

3. Additional Fertilizer

   Approximately one month after the spring fertilizer is applied; the Engineer will inspect planted areas and determine if an additional application of fertilizer is needed for any plant or group of plants.

   If the Engineer determines additional fertilizer is required, apply fertilizer according to soil test results between June 15 and July 15th.

I. Tree Guards for Stream Buffer Saplings

Each planted bare root, sapling-sized plant shall be fitted with a tree guard to protect the saplings from wildlife browsing. The tree guards shall be at least 36 inches tall, with appropriately sized wooden stakes or bamboo to securely support the tree guard [i.e., a 4-foot (1.2 meter) stake for a 36 inch (914.4 mm) guard]. Mesh tube-type tree guards are required. Vexar tubes, or equivalent, are to be used. All tree guards shall be removed from the saplings at final inspection**.**

J. Restoration and Cleanup

Restore areas where existing grass has been damaged or scarred during planting operations at no expense to the Department. Restore the disturbed areas to their original conditions as directed by the Engineer. Clean up debris, spoil piles, and containers and leave the Project area clean.

Clean up and remove all debris, spoil piles, containers, water reservoirs, trash, etc. and leave the project area in an acceptable condition. Inspect all installed erosion control devices weekly and clean out or repair as required. Remove all erosion control devices at final acceptance unless otherwise instructed by the Engineer.

702.3.06 Quality Acceptance

Preserve the plants in a healthy growing condition and keep plants moist, particularly during drought conditions (no rain for any two week period). The acceptability of the plant material planted and maintained as specified will be determined at the end of an establishment period.

The plant establishment period is the period from the last planting specified in Subsection 702.3.05.B until the following October 1. Plant all plants in one planting season unless otherwise approved by Engineer.

A. First Establishment Period

At the end of the first planting season, the first establishment period begins. The Department will make the first semi-final inspection 30 days before the end of the first establishment period. Replace dead, dying, diseased, unsatisfactory, and missing plants, by January 20 of the next (second) planting season. For stream buffer areas, all replacement plants shall be tagged with 18 inch (457.2 mm) lengths of brightly-colored survey tape. Tree guards shall be placed around all replacement saplings. All costs for replanting, tagging and tree guards for replacement trees shall be included in the contract price bid for the original planting.

B. Second Establishment Period

At the end of the second planting season, the second plant establishment period begins. The Department will make the second semi-final inspection 30 days before the end of the second establishment period. Again, replace dead, dying, diseased, unsatisfactory, and missing plants, by January 20 of the next (third) planting season. For stream buffer areas, all replacement plants shall be tagged with 18 inch (457.2 mm) lengths of brightly-colored survey tape. Tree guards shall be placed around all replacement saplings. All costs for replanting, tagging and tree guards for replacement trees shall be included in the contract price bid for the original planting.

C. Final Inspection

The Department will make the final inspection of the plants during May, following any needed replacements during the previous planting season. Assume responsibility for the plants until the Final Acceptance of the Project or a portion of the Project.

702.3.07 Contractor Warranty and Maintenance

Project maintenance includes, but is not limited to, watering, cultivating, weeding, pruning, repairing, adjusting guys and stakes, and performing other work as ordered by the Engineer until final acceptance.

Promptly remove from the Project area dead plants or those that no longer conform to the requirements of Subsection 702.2.A.2.

Mow the entire right-of-way within the limits of the Project up to a maximum of four times per calendar year. Do not mow native restoration areas, wet swales, or riparian mitigation sites.

A. Leaning Trees

Straighten leaning trees as directed by the Engineer. Follow Staking and Guying requirements for replacements or repairs as per Subsection 702.3.05.E.

B. Shrub Maintenance

1. Pruning

   Prune dead or diseased limbs to provide for plant health and appearance as directed by the Engineer.

2. Landscape Mulching

   Continuously maintain shrub and tree beds with a clean, freshly mulched appearance using the mulch originally specified. See Subsection 702.3.05.C. Do not mulch shrub and tree beds within riparian mitigation sites.

   a. Apply a 2 in (50 mm) loose layer of specified mulch (top-dressing) on top of all areas, including tree pits, initially mulched, at the following times:

      1. In August, during the first plant establishment period.
      2. In April, during the second plant establishment period.
      3. In August, during the second plant establishment period.
      4. In April, prior to the final inspection.

3. Applying Fertilizer

   See Subsection 702.3.05.H.

4. Applying Pesticides

   a. Inspect all planted or seeded vegetation for insects, grubs, mites, diseases, etc., once every two weeks. Apply insecticides, fungicides, and herbicides according to the manufacturer's recommendations to effectively control or eradicate the problem.
   b. Perform all pesticide applications under the direct supervision of a trained licensed commercial pesticide operator whose license includes subcategory 27 – Right of Way Pest Control. Carry the pesticide license/certification on the work site during applications. Carry all labeling associated with the chemical being applied at the work site.
   c. Submit all product information data sheets and EPA approval numbers on all pesticides proposed to be used prior to application for approval.
   d. Notify the Engineer a minimum of 48 hours prior to any and all pesticide applications.
   e. Add a blue dye to all spray applications unless approved otherwise by the Engineer.
   f. Monitor the weather and spray under proper weather conditions. Spraying shall not occur when the weather is greater than 10 miles per hour.
   g. Wear the proper safety attire. Wear long sleeve shirts, long pants, gloves, and safety glasses. Wear or use any additional protective safety attire or gear as recommended by the product's manufacturer.
   h. Repair any damage that is a result of mishandling or misuse of materials, at no expense to the Department, to the satisfaction of the Engineer.
   i. For stream buffer and marsh restoration areas, pesticides are not to be used unless approved by the Department Ecology Manager.

5. Edging
   a. Edge all shrub pits, shrub beds, and tree pits once a month throughout the life of the project such that the vee-cut edging detail specified on the plans is maintained. Prevent grass and weeds from growing over or into the shrub beds and tree pits.
   b. Use equipment specifically designed for edging. Line trimming equipment shall not be used.
6. Watering
   a. Check all planted material once a week throughout the contract for dryness by removing the mulch from their base and "sampling the soil" approximately 4 in (100mm) deep. Water if the soil is not moist.
   b. Water all planted material if a drought (no rain for two weeks) occurs. Provide the water required to meet the watering requirements.
   c. Water each plant thoroughly until the ground is saturated to a depth slightly below the root ball. Apply water in a manner to prevent erosion.
7. Weed Control

   Perform weed control throughout the project, a minimum of once every two weeks, in all areas within the project limits to maintain tree pits, shrub beds, sidewalks, curb and gutter, walkways, ditch paving, concrete medians, and other pavement weed free. Meet the following conditions:
   a. Perform weed control to prevent weeds from becoming established, setting seed, or from becoming visible in the planting beds.
   b. Completely remove all undesirable plants (weeds) by hand pulling. Removal of weeds may be accomplished using herbicides if approved by the Engineer. However, the use of herbicides is prohibited in stream buffer areas unless approved by the Department Ecology Manager.
   c. Apply an approved pre-emergent herbicide twice each year, once in the spring and once in the fall, throughout the contract. The use of pre-emergent herbicides is prohibited in stream buffer areas. Apply pre-emergent to all shrub beds and tree pits. Notify the Engineer 48 hours prior to spraying. Use a blue dye in all applications unless approved otherwise by the Engineer.
   d. Eradicate all invasive exotic pest plants found within the project limits throughout the life of the project, including stream buffer and marsh areas. Volunteer, non-invasive plant material within stream buffer restoration areas is acceptable.
   e. Dispose off site on a daily basis all weed, exotic plants, clippings, litter, and debris generated.
8. Policing

   Remove debris such as paper, broken limbs, bottles, cans, etc., a minimum of the first and third week of each month from all areas within the project limits while maintaining the site.
9. Mitigation Areas

   Pruning, mulching, edging, and applying spring fertilizer are not required within wet swales, native restoration areas, stream buffers and regenerated forest areas.

C. Tree Maintenance

1. Watering

   See Subsection 702.3.07.B.6
2. Landscape Mulch

   See Subsection 702.3.07.B.2
3. Fertilizer

   See Subsection 702.3.05.H.
4. Abnormal Conditions

   Periodically (once every two weeks) observe trees and shrubs for abnormal conditions such as insects, borers, web worms, red spiders, etc., and immediately treat.
5. Sucker Growth

Remove sucker growth once a month. Sucker growth is the shoots that sprout out around the base of the tree trunk.

6. Pruning and Deadwood

   Remove deadwood at least two times a year. Prune dead branches. Paint cuts, and wounds or scars with tree paint only when specified in the plans. Do not top Crape Mrytles. See Subsection 702.3.05.F.

7. Pesticide Control

NOTE: Apply pesticides as necessary to control harmful insects and diseases. Follow the manufacturer's instructions. See Subsection 702.3.07.B.4**. NOTE: Use chemicals according to Federal, State and county directives on environmental control that carry an EPA approval number.**

8. Weed Control

   See Subsection 702.3.07.B

9. Staking and Guying

   Remove all support guy wires, strapping and stakes from plants which have gone through one complete growing season.

702.4 Measurement

A. Plants

Plants of the name and size specified are measured for payment according to the number planted that are still living and viable and in an acceptable condition at the time of Final Acceptance. A viable plant must have a minimum of 75 percent of the leaf-bearing crown with healthy foliage.

B. Fertilizer

Spring application fertilizer applied to planted and regenerated areas will be the actual number of pounds (kilograms) placed and accepted. Fertilizer, lime, and plant topsoil used in prepared plant topsoil or plant bed preparation are not measured for separate payment. For stream buffer and marsh areas, the addition of fertilizer or lime is prohibited.

C. Perimeter Stakes

Perimeter stakes is not measured for payment unless such item is shown as a separate Pay Item in the Proposal.

D. Clearing and Grubbing

Clearing and grubbing is not measured for payment unless the Item is shown as a separate Pay Item in the Proposal.

E. Landscape Mulch

The quantity of landscape mulch and top-dressing measured for payment will be the actual number of square yards (meters) completed as specified and accepted. The presence of weeds or other growth, or foreign material, will be cause for rejection.

702.4.01 Limits

General Provisions 101 through 150.

702.5 Payment

A. Plants

Plants measured for payment will be paid for as follows:

1. After planting satisfactorily, the Department will pay 50 percent of the Contract Unit Price bid per each on the next estimate.

2. Until Final Acceptance, perform all required maintenance according to Subsection 702.3.07 when necessary or as ordered by the Engineer.

   If the Contractor fails to properly maintain the landscaping, daily charges shall be assessed against any money due or that may become due the Contractor in accordance with the schedule of deductions shown in Subsection 108.08, but not less than $150 per calendar day, and will continue until project maintenance is approved by the Engineer.

   The charges are in addition to those specified for delay or failure in completing the Work within the specified time.
3. After the first semi-final inspection, the Department will pay 15 percent of the Contract Unit Price bid per each of the live, viable plants.
4. After the second semi-final inspection, the Department will pay 15 percent of the Contract Unit Price bid per each of the live, viable plants.
5. At Final Acceptance, the Department will pay the remaining 20 percent less the Full Contract Unit Price bid per each plant not accepted.

   Payments are full compensation for furnishing, planting, replanting as required, pruning, staking, guying, soil conditioning, and preparing plant beds, including applying additives, digging plant pits, preparing plant topsoil and mulch, disposing of waste material, and maintaining the plants during the plant-establishment period.

B. Fertilizer

All grades of fertilizer applied in the spring, measured as specified above, are paid for at the Contract Price per pound (kilogram) or per ton (megagram), whichever is indicated in the Proposal. Payment is full compensation for furnishing and applying and for watering regenerated areas.

For native restoration, stream buffer and marsh restoration areas, the addition of fertilizer or lime is prohibited.

C. Perimeter Stakes

Perimeter stakes will not be measured for payment. The cost will be included in the overall contract price.

D. Landscape Mulch

Landscape mulch measured for payment will be paid for as follows:

1. After mulching satisfactorily, the Department will pay 40% of the Contract Unit Price bid per square yard (meter).
2. After satisfactorily completing mulch (topdressing) in August of the first plant establishment period, the Department will pay 15% of the Contract Unit Price bid per square yard (meter).
3. After satisfactorily completing mulch (topdressing) in April of the second plant establishment period, the Department will pay 15% of the Contract Unit Price bid per square yard (meter).
4. After satisfactorily completing mulch (topdressing) in August of the second plant establishment period, the Department will pay 15% of the Contract Unit Price bid per square yard (meter).
5. After satisfactorily completing mulch (topdressing) in April of the final planting season, (a month before the Final Inspection), the Department will pay 15% of the Contract Unit Price bid per square yard (meter). Such payment shall be full compensation for furnishing, installing, topdressing, and maintaining mulch as required.
6. Do not mulch marsh restoration areas.
7. Do not apply additional applications of mulch after the initial application in stream buffer restoration areas.

Payment will be made under:

Item No. 702	Plant Name and Size	Per each
Item No. 702	Fertilizer, Spring Application	Per ton (megagram)
Item No. 702	Landscape Mulch	Per square yard (meter)
Item No. 702	Spring Application Fertilizer	Per pound (kilogram)

Item No. 702	Live Stakes and Planting	Per each
Item No. 702	Perimeter Stakes	Per each
Item No. 702	Bare Root Seedling Planting	Per each

702.5.01 Adjustments

General Provisions 101 through 150.

Section 703—Tree Wells, Tree Walls, and Root Protection

703.1 General Description

This work includes protecting the root systems of selected trees and shrubs with retaining walls, tree wells, and porous material.

703.1.01 Definitions

General Provisions 101 through 150.

703.1.02 Related References

A. Standard Specifications

Section 607—Rubble Masonry

Section 834—Masonry Materials

Section 842—Clay Pipe

Section 893—Miscellaneous Planting Material

B. Referenced Documents

General Provisions 101 through 150.

703.1.03 Submittals

General Provisions 101 through 150.

703.2 Materials

Use materials that meet the requirements of the following Specifications:

Material	Section
Mortar and Grout	834
Masonry Stone	834
Clay Underdrain Pipe	842.2
Clay Drain Tile	842.2
Porous Material	893.2.05
Tree Paint	893.2.06

703.2.01 Delivery, Storage, and Handling

General Provisions 101 through 150.

703.3 Construction Requirements

703.3.01 Personnel

General Provisions 101 through 150.

703.3.02 Equipment

General Provisions 101 through 150.

703.3.03 Preparation

General Provisions 101 through 150.

703.3.04 Fabrication

General Provisions 101 through 150.

703.3.05 Construction

A. Excavating and Filling Foundations

Avoid unnecessarily injuring root systems when excavating for tree wells and tree walls.

Excavate and fill foundations to these requirements:

- To the elevations shown on the Plans or as directed
- To the full widths and lengths of footings shown on the Plans

Where the soil under tree wells or tree walls is unstable, backfill the foundation area with broken stone, coarse gravel, or other approved material and firmly tamp it.

Ensure that foundations firmly and uniformly support masonry.

B. Constructing Masonry

Build the tree wells and tree walls from rubble masonry according to Plan details. Use rubble masonry according to Section 607.

C. Providing Drainage

Provide adequate well drainage using weep holes, pipe drains, drain tile, or porous material as shown on the Plans.

D. Protecting Tree Roots

Where tree root protection is required, spread porous material loosely to the extent and depths indicated on the Plans, or as directed by the Engineer. Before spreading porous material, clean the tree root protection area of vegetation. Before backfilling over a tree or plant that will be preserved, place porous material above its roots.

E. Damaging Plants

Avoid cutting roots or damaging trees and shrubs while building tree wells and tree walls and placing the porous material to protect the roots.

When making necessary cuts, use sharp tools and cut cleanly according to the best horticultural practices. Immediately cover with tree paint, all scarred or cut surfaces 1 in (25 mm) or more in diameter.

703.3.06 Quality Acceptance

General Provisions 101 through 150.

703.3.07 Contractor Warranty and Maintenance

General Provisions 101 through 150.

703.4 Measurement

A. Tree Well and Tree Wall

Tree well and tree wall masonry completed and accepted is measured for payment in cubic yards (meters).

B. Porous Material

Porous material for tree root protection, placed and accepted, is measured for payment in cubic yards (meters) as measured loose in the vehicle at the point of dumping.

C. Drain Pipe or Tile

Drain pipe or drain tile is measured for payment in linear feet (meters) along the center of each line, lateral, or riser from ends-to-center or center-to-center of junctions and fittings.

D. Excavation, Paint, and Replacement or Disposal of Material

No measurement or payment is made for excavation, tree paint, replacement of unsuitable material, or disposal of surplus material. These are considered a part of the Pay Item to which each pertains.

703.4.01 Limits

General Provisions 101 through 150.

703.5 Payment

Rubble masonry for tree wells and walls and porous material for tree root protection will be paid for at the Contract Unit Price per cubic yards (meters).

Clay drain pipe or drain tile will be paid for by the linear foot (meter).

Payment will be made under:

Item No. 703	Rubble masonry for tree wells and walls	Per cubic yard (meter)
Item No. 703	Porous material for tree root protection	Per cubic foot (meter)
Item No. 703	Drain pipe_____ in (mm)	Per linear foot (meter)
Item No. 703	Drain tile_____ in (mm)	Per linear foot (meter)

703.5.01 Adjustments

General Provisions 101 through 150.

Section 705—Transplanting Trees

705.1 General Description

This work includes transplanting existing trees at new locations as shown on the Plans and as directed by the Engineer.

705.1.01 Definitions

General Provisions 101 through 150.

705.1.02 Related References

A. Standard Specifications

Section 700—Grassing

Section 891—Fertilizers

Section 893—Miscellaneous Planting Material

B. Referenced Documents

General Provisions 101 through 150.

705.1.03 Submittals

General Provisions 101 through 150.

705.2 Materials

Use materials that meet the requirements of the following Specifications:

Material	Section
Plant Topsoil	893.2.01
Fertilizer	891.2.01
Mulch	893.2.02
Stakes	893.2.08
Staking Wire	(See planting details)
Rubber Hose	(See planting details)
Tree Paint	893.2.06
Water for Plant Growth	700.2

705.2.01 Delivery, Storage, and Handling

General Provisions 101 through 150.

705.3 Construction Requirements

705.3.01 Personnel

Have skilled workers transplant according to the best horticultural practices.

705.3.02 Equipment

Have tree transplanting equipment as detailed in the Plans and Specifications on the project site and in satisfactory condition before construction begins.

Excavate trees and tree pits with the Vermeer-type tree spade or tree mover or equivalent approved mechanized equipment.

705.3.03 Preparation

General Provisions 101 through 150.

705.3.04 Fabrication

General Provisions 101 through 150.

705.3.05 Construction

A. Transplanting Operations

Follow these procedures when transplanting trees:

1. Trunk and Branch Protection

   Protect trunks and branches from breaks or bruises. Spray trees in leaf with an approved antidesiccant before digging.

2. Pruning

   Prune trees before transplanting as directed by the Engineer. Remove broken or badly bruised branches with a clean cut.

3. Securing Roots

   Dig trees to secure as many roots as possible. Maintain a tight, firm ball during the moving operations.

4. Excavating

   Excavate trees and tree pits. Use the excavated material to backfill the pits from which the existing trees were removed.

5. Placing Trees in Pits

   Place transplanted trees into new pits. Backfill voids between the ball and the pit with clean, washed sand and tamp. Thoroughly water the sand in with a root feeder or water needle.

6. Applying Topsoil and Mulch

   Apply plant topsoil to the transplanted tree according to Plan details. Mulch a minimum 6-foot diameter tree pit with 3 in (75 mm) of mulching material.

7. Staking and Anchoring Trees

   Stake or anchor trees according to planting details or as directed by the Engineer.

705.3.06 Quality Acceptance

Replace severely damaged or disfigured trees that the Engineer determines were damaged by operations. Replace with trees of approximately the same size, genus, species, variety, and quality at the Contractor's expense.

705.3.07 Contractor Warranty and Maintenance

A. Watering

After the initial watering, make four additional waterings at two-week intervals.

B. Guarantee Period

A guarantee period is not required for the transplanting work.

705.4 Measurement

The quantity of transplanted trees paid for under this Item is the number transplanted.

Size is determined by tree caliper (diameter) measurement at a point 12 in (300 mm) above the natural ground surface. Where tree caliper exactly coincides with a break point in the Pay Item size intervals, that tree is classed in the lower size interval.

705.4.01 Limits

General Provisions 101 through 150.

705.5 Payment

Transplanting trees will be paid for at the Contract Unit Price. Payment is full compensation for the work and materials including plant topsoil, fertilizer, mulch, stakes, staking wire, rubber hose, tree paint, water, and incidentals necessary to complete the Item.

Payment will be made under:

Item No. 705	Transplanting trees,_____ in (mm) to_____ in (mm) caliper	Per each

705.5.01 Adjustments

General Provisions 101 through 150.

Section 706—Turf Establishment

706.1 General Description

This work includes providing a hardy and permanent ground cover at designated locations. The cover is subject to the Engineer's approval.

706.1.01 Definitions

General Provisions 101 through 150.

706.1.02 Related References

A. Standard Specifications

Section 700—Grassing

B. Referenced Documents

General Provisions 101 through 150.

706.1.03 Submittals

General Provisions 101 through 150.

706.2 Materials

Select a viable ground cover according to Section 700.

706.2.01 Delivery, Storage, and Handling

General Provisions 101 through 150.

706.3 Construction Requirements

706.3.01 Personnel

General Provisions 101 through 150.

706.3.02 Equipment

General Provisions 101 through 150.

706.3.03 Preparation

General Provisions 101 through 150.

706.3.04 Fabrication

General Provisions 101 through 150.

706.3.05 Construction

General Provisions 101 through 150.

706.3.06 Quality Acceptance

Refer to Subsection 700.3.06 "Quality Acceptance" and Subsection 700.3.07 "Contractor Warranty and Maintenance" for acceptance of a viable ground cover.

706.3.07 Contractor Warranty and Maintenance

General Provisions 101 through 150.

706.4 Measurement

No field measurements are required. Measurement is calculated from known dimensions as follows:

A. Type A—Grading and Drainage Projects

[Project length (PL) minus bridge and exception* length (BL)] times [right-of-way width or Engineer-specified width (RW) minus roadbed width (RBW)] equals _____ square feet divided by 43,560 ft²/acre equals pay quantity in acres.

[Project length (PL) minus bridge and exception* length (BL)] times [right-of-way width or Engineer-specified width (RW) minus roadbed width (RBW)] equals _____ square meters divided by 10,000 m² equals pay quantity in hectares.

(PL – BL) x (RW – RBW) = ____ft² ÷ 43,560 ft²/acre = pay quantity in acres

(PL – BL) x (RW – RBW) = ____m² ÷ 10,000 m² = pay quantity in hectares

B. Type B: Base and Paving Projects

[Project length (PL) minus bridge and exception* length (BL)] times [unpaved shoulder width (SW) plus 6 ft for each roadway side (RS)] = ___ square feet divided by 43,560 ft²/acre= pay quantity in acres.

[Project length (PL) minus bridge and exception* length (BL)] times [unpaved shoulder width (SW) plus 1.8 m for each roadway side (RS)] = ___ square meters divided by 10,000 m² = pay quantity in hectares.

(PL – BL) x (SW + 6RS) = ___ ft² ÷ 43,560 ft²/acre = pay quantity in acres

(PL – BL) x (SW + 1.8RS) = ___ m² ÷ 10,000 m² = pay quantity in hectares

C. Type C: Complete Project

[Project length (PL) minus (bridge and exception* length (BL)] times [right-of-way width or Engineer-specified width (RW) minus plan paved surface width (PPW)] equals square feet divided by 43,560 ft²/acre= pay quantity in acres.

[Project length (PL) minus (bridge and exception* length (BL)] times [right-of-way width or Engineer-specified width (RW) minus plan paved surface width (PPW)] equals square meters divided by 43,560 ft²/acre= pay quantity in hectares.

(PL – BL) x (RW – PPW) = ____ft² ÷ 43,560 ft²/acre = pay quantity in acres

(PL – BL) x (RW – PPW) = ____m² ÷ 10,000 m² = pay quantity in hectares

*Exception means major road intersections and Plan exceptions, not side roads, drives, etc.

706.4.01 Limits

General Provisions 101 through 150.

706.5 Payment

The turf establishment area will be paid for at the Contract Price per acre (hectare). Payment is full compensation for equipment, labor, seed, fertilizer, and any other materials necessary to complete the Item.

Payment will be made under:

Item No. 706	Turf establishment, type_____	Per acre (hectare)

706.5.01 Adjustment

General Provisions 101 through 150.

Section 708—Plant Topsoil

708.1 General Description

This work includes furnishing and applying approved plant topsoil at the locations shown on the Plans or as directed by the Engineer and according to these Specifications.

708.1.01 Definitions

General Provisions 101 through 150.

708.1.02 Related References

A. Standard Specifications

Section 104—Scope of Work

Section 106—Control of Materials

Section 107—Legal Regulations and Responsibility to the Public

Section 893—Miscellaneous Planting Materials

B. Referenced Documents

General Provisions 101 through 150.

708.1.03 Submittals

General Provisions 101 through 150.

708.2 Materials

A. Plant Topsoil Materials

Use plant topsoil that meets the requirements of Subsection 893.2.01.

B. Sources of Material

Except as modified in this Section, furnish plant topsoil material according to Section 106.

1. Plant Topsoil Obtained from the Work

   The requirements of Subsection 104.06, “Right in and Use of Material Found on the Work” are in effect for plant topsoil obtained from the Work.

   a. Obtain the quantity of plant topsoil called for on the Plans.
   b. Use plant topsoil material present on the Project as long as the topsoil meets the Specifications applying to the Item.
   c. Excavate for topsoil only within the construction limits of the Project. Obtain topsoil from embankment areas, excavation areas, or borrow excavation pits.
   d. When obtaining plant topsoil from borrow excavation pits or the roadway, cross section the excavated areas a second time before beginning regular excavation.

2. Plant Topsoil Furnished by the Contractor

   When insufficient material is obtainable from the Work, obtain additional topsoil offsite.

   The Contract Price will include the costs necessary to locate, purchase, and deliver the required amount of acceptable material to the Work.

708.2.01 Delivery, Storage, and Handling

For the purpose of measurement, the Contractor may haul plant topsoil in any type of vehicle, provided the vehicle when loaded to capacity and traveling over public roads and streets meets the provisions of Subsection 107.14, “Load Restrictions.”

When using pans or scrapers, the capacity will be the manufacturer’s rated capacity.

708.3 Construction Requirements

708.3.01 Personnel

General Provisions 101 through 150.

708.3.02 Equipment

General Provisions 101 through 150.

708.3.03 Preparation

General Provisions 101 through 150.

708.3.04 Fabrication

General Provisions 101 through 150.

708.3.05 Construction

A. General Requirements

Unless otherwise specified in the Plans, uniformly spread plant topsoil to at least 2 in (50 mm) loose depth.

1. Erosion Control

   Only use plant topsoil on slopes where the gradient is 3:1 or flatter.

   To reduce loss of plant topsoil by erosion, place the soil shortly before and in conjunction with grassing operations.

   Place topsoil and complete grassing within specified seasonal limits.

2. Spreading Procedure

   Before applying plant topsoil, scarify the designated areas 6 in to 8 in (150 mm to 200 mm) deep.

   Mix the plant topsoil, lime when required, and the first application fertilizer with the underlying soil when preparing the soil for grassing. Spread and smooth the topsoil uniformly.

B. Plant Topsoil Obtained From The Work

1. Stockpiling

   When obtaining topsoil from the work site, strip and stockpile the topsoil in suitable locations in advance of grading operations.

   Just before grassing, remove the plant topsoil from the stockpile and spread it over the designated areas.

   If grassing is started before grading operations are finished, if feasible, haul the topsoil from undisturbed areas before grading begins directly to the areas designated for the topsoil, eliminating the cost of stockpiling and removing the stockpile.

2. Surplus Material

   When stockpiling more material than specified in the Contract, use the surplus material as additional plant topsoil material if directed by the Engineer.

   After constructing the Item, use the surplus material left in the stockpiles to maintain the Item or to fill washes that occur within a reasonable haul distance.

   Otherwise, remove or dress down the remaining material as directed by the Engineer, without additional compensation.

C. Plant Topsoil Furnished by Contractor

When locating, obtaining, and paying for plant topsoil from pits outside the right-of-way, excavate the topsoil and haul it directly to the designated areas just before the planting begins.

Notify the Engineer, according to Subsection 893.2.01, "Plant Topsoil," of the source of the material. The Engineer will inspect the topsoil. If the material is suitable, the Engineer will specify the permissible excavation depth. If the permissible excavation depth is exceeded, the material obtained from the areas will be rejected.

708.3.06 Quality Acceptance

After placing the plant topsoil, replace material lost by erosion at no expense to the Department.

708.3.07 Contractor Warranty and Maintenance

General Provisions 101 through 150.

708.4 Measurement

Accepted plant topsoil for this Item is measured by the cubic yard (meter) of material delivered in vehicles to the designated areas for plant topsoil. Only vehicles loaded to full capacity are measured for payment. No payment will be made for material delivered in partially filled vehicles.

Plant topsoil is not measured for payment when it is used for an Item that includes the cost of the plant topsoil in the price bid per Unit for the Item.

708.4.01 Limits

General Provisions 101 through 150.

708.5 Payment

Plant topsoil, eligible for payment, will be paid for at the Contract Unit Price per cubic yard (meter). Payment is full compensation for furnishing the material, removing objectionable matter from the material, loading and unloading, stockpiling and removing from the stockpile, hauling, spreading, preparing the ground, pulverizing, mixing, remixing, and for all maintenance.

Payment will be made under:

Item No. 708.	Plant topsoil	Per cubic yard (meter)

708.5.01 Adjustments

General Provisions 101 through 150.

Section 711— Turf Reinforcement Matting

711.1 General Description

This section includes the requirements for furnishing and placing turf reinforcement matting (TRM) over prepared areas according to the Plans or as directed by the Engineer.

711. 1.01 Definitions

General Provisions 101 through 150.

711.02 Related References

A. Standard Specifications

Section 700—Grassing

B. Referenced Documents

QPL 49

711.02 Submittals

General Provisions 101 through 150.

711.2 Materials

Use materials listed on QPL 49. TRM is designated Types 1, 2, 3, 4, 5, and 6 and ranges in allowable hydraulic shear stress from Type 1 to Type 6, Type 6 being the highest. Use a TRM type equal to or higher than the TRM type specified by the designer. All TRM types require permanent grass be sown concurrently with installation.

Alternatively, in special cases dependent upon the soil's vegetative-support quality and the growing season, the designer may specify only grass and mulch or grass and a biodegradable rolled erosion control product for 0-3 psf (0-143 N/m^2) shear stress conditions.

Allowable Hydraulic Shear Stress Ranges With Vegetation[1]

Type 1	Type 2	Type 3	Type 4	Type 5	Type 6
0-2 psf (0-96 N/m^2)	0-4 psf (0-191 N/m^2)	0-6 psf (0-287 N/m^2)	0-8 psf (0-382 N/m^2)	0-10 psf (0-478 N/m^2)	0-12 psf (0-574 N/m^2)

[1]Allowable hydraulic shear stress in the unvegetated condition = 2.0 psf (96 N/m^2).

Determine the allowable vegetated and unvegetated hydraulic shear stress for the TRM by using either of the independent laboratories of the Texas Transportation Institute (TTI) or the National Transportation Product Evaluation Program (NTPEP). Use the following large-scale test methods:

ASTM D 6459 – 07 Standard Test Method for Determination of Rolled Erosion Control Product (RECP) Performance in Protecting Hillslopes from Rainfall-Induced Erosion

ASTM D 6460 – 07 Standard Test Method for Determination of Rolled Erosion Control Product (RECP) Performance in Protecting Earthen Channels from Stormwater-Induced Erosion

Ensure materials meet the following requirements.

A. Preformed TRM

Use TRM with a web of mechanical or melt-bonded polymer nettings, monofilaments, or entangled fibers to form a dimensionally stable matrix. Bond the TRM with one of the following:

- Polymer welding
- Thermal fusion
- Polymer fusion
- Fibers placed between two high-strength, biaxially oriented nets bound by parallel-lock stitching with polyolefin, nylon, or polyester threads

Use TRM with enough strength and elongation to limit stretching and maintain its shape before, during, and after installation under dry or wet conditions. Provide TRM with stabilized components that avoid ultraviolet degradation and are inert to chemicals normally encountered in a natural soil environment. Ensure the TRM conforms to the following minimum-value physical properties:

Category	Grab Tensile Strength lb/ft (kN/m)[1,2]	UV Stability[3]	Allowable Hydraulic Shear Stress[4] lb/ft^2 (N/m^2)
	ASTM D 6818	ASTM D 4355[5]	HEC 15, 2005
Type 1	125 (1.82)	80%	0-2 (0-96)
Type 2	125 (1.82)	80%	0-4 (0-191)
Type 3	125 (1.82)	80%	0-6 (0-287)
Type 4	150 (2.19)	80%	0-8 (0-382)
Type 5	175 (2.55)	80%	0-10 (0-478)
Type 6	200 (2.92)	80%	0-12 (0-574)

[1]Machine direction, ASTM D6818

[2]In field conditions requiring high loading and/or high survivability requirements (e.g., the TRM having to bear heavy-equipment loading), tensile strength of 3,000 lb/ft (44 kN/m) or greater may be required

[3]Percentage of strength of an unexposed sample retained

[4]As calculated in accordance with the methods detailed in the FHWA HEC 15, 2005, document

[5]Exposure in carbon arc light in accordance with ASTM D 822 and ASTM G 152 is required.

B. Stakes or Staples

Use 1 in. by 3 in. (25 mm by 75 mm) wooden stakes made from sound stock cut in a triangular shape. Cut stakes 12 in. to 18 in. (300 mm to 450 mm) long depending on soil compaction. Use metal staples with the following characteristics:

- 11- gauge steel

- U shape
- Legs at least 8 in. (200 mm) long
- Crown 2 in. (50 mm) across

When the construction plans specify deep anchors be used along with stakes or staples for zones of shear stress greater than 12 psf (574 N/m2) as an alternative to using riprap, follow the TRM manufacturer's guidelines for anchor selection and installation procedures and provide the Engineer with the details of the recommended procedure. Use anchors listed on the QPL 49.

711.2.01 Delivery, Storage, and Handling

General Provisions 101 through 150.

711.3 Construction Requirements

711.3.01 Personnel

General Provisions 101 through 150.

711.3.02 Equipment

General Provisions 101 through 150.

711.3.03 Preparation

A. Site Preparation

Before protecting areas with TRM, prepare the area according to Section 700 with the following steps:

1. Bring the area to final grade.
2. Plow the area.
3. Lime the area.
4. Fertilize the area.
5. Grass the area.

Provide a smooth, firm, and stable surface free of rocks, clods, roots, or other obstructions preventing the TRM from fully contacting the soil.

711.3.04 Fabrication

General Provisions 101 through 150.

711.3.05 Construction

A. Installing TRM

Do not use TRM in areas where rock crops out. Install the TRM either in ditches or on slopes according to the manufacturer's instructions and provide the Engineer with the details of the recommended procedure. In the absence of specific instructions from the manufacturer, install the TRM according to the following requirements:

1. Ditches

   To install the TRM in ditches:

   a. Cut a transverse trench 6 in. wide by 9 in. deep (150 mm wide by 225 mm deep) at the ends of the TRM.

   b. Cut longitudinal, 4 in. (100 mm) deep anchor slots along each side of the TRM along the full length of the ditch and bury the TRM edges. The Engineer will require additional or deeper anchor slots or deep anchors for large volumes of water that cause high shear stress.

c. Roll out the center strip of TRM, starting at the lower end of the ditch.

d. Roll out each adjacent strip of TRM to overlap the preceding strip at least 3 in. (75 mm).

e. Overlap the ends of each TRM roll 3 ft (1 m) with the upslope mat on top. Stretch the TRM to the bottom of the slot, folding it back and staking through two layers of material.

f. Stake each strip of TRM at 1 ft (300mm) intervals in each anchor slot, with one stake serving the overlapped edges of adjoining strips.

g. Backfill and compact the slot.

h. Fold the TRM back over the slot and continue in the upstream direction (closed anchor slot).

i. Stake the TRM snugly in the longitudinal slots and at intervals a maximum of 5 ft (1.5 m) along the ditch (open anchor slot).

j. Backfill and dress the longitudinal anchor slots.

711.3.06 Quality Acceptance

General Provisions 101 through 150.

711.3.07 Contractor Warranty and Maintenance

General Provisions 101 through 150.

711.4 Measurement

TRM completed and accepted is measured for payment by the square yard (meter) of surface measured.

711.4.01 Limits

Overlaps and anchor slots are incidental to the work and are not measured for payment.

711.5 Payment

This work will be paid for at the Contract Price per square yard (meter) for TRM completed, in place, and accepted. Payment is full compensation for furnishing and installing the TRM according to this Specification.

Preparation of the area and grassing will be paid for according to Section 700.

Payment will be made under:

Item No. 711	Turf reinforcement matting, Type ___	Per square yard (meter)

711.5.01 Adjustments

General Provisions 101 through 150.

Section 712—Fiberglass Blanket

712.1 General Description

This work includes furnishing and placing fiberglass blankets over previously prepared and grassed areas according to the Plans or as directed by the Engineer.

712.1.01 Definitions

General Provisions 101 through 150.

712.1.02 Related References

A. Standard Specifications

Section 106—Control of Materials

Section 700—Grassing

Section 822—Emulsified Asphalt

B. Referenced Documents

General Provisions 101 through 150.

712.1.03 Submittals

Submit certification according to Subsection 106.05 stating that materials conform to the requirements of this Section.

712.2 Materials

A. Fiberglass Mat or Blanket

Fiberglass mat is a machine-produced blanket consisting of a uniform layer of continuous, randomly oriented glass fiber strands. Use a mat that is at least 48 in (1.2 m) wide and weighs the following:

- At least 0.2 lbs/yd² (105 g/m²) when used on slopes
- At least 0.4 lbs/yd² (215 g/m²) when used in waterways

B. Anchoring Staples

Use staples made of cold-drawn wire no smaller than 14 gauge (2 mm) in diameter, formed into a U shape with 6 in (150 mm) long legs and a 1 in (25 mm) wide crown.

C. Asphalt

Use asphalt emulsion for tying down the blanket that is grade SS-1h or SS1, conforming to Section 822.

712.2.01 Delivery, Storage, and Handling

General Provisions 101 through 150.

712.3 Construction Requirements

712.3.01 Personnel

General Provisions 101 through 150.

712.3.02 Equipment

General Provisions 101 through 150.

712.3.03 Preparation

Before placing the fiberglass mat, complete grassing, smooth the area, and clear it of stones, lumps, roots, or other material that would prevent the mat from laying snugly on the underlying soil.

712.3.04 Fabrication

General Provisions 101 through 150.

712.3.05 Construction

A. Placing Mat

Place the fiberglass mat or blanket within 24 hours after the area has been planted but before any rain or watering. Place the mat as follows:

1. Dig a 9 in (225 mm) deep anchor slot across the upgrade end of the site.
2. Place the initial 12 in (300 mm) of blanket in the anchor slot.
3. Backfill and solidly tamp the slot.
4. Unroll the blanket in the direction of water flow, keeping the blanket in contact with the soil over the entire area.
5. Overlap adjacent strips at least 2 in (50 mm). Overlap adjoining ends at least 6 in (150 mm) with the upstream section on top.

B. Stapling

Drive staples vertically into the ground approximately 1 yd (1 m) apart on each side of the blanket.

Drive one row in the center alternately spaced between each side staple.

Place the edge staples in the 2 in (50 mm) overlap. At the end of each mat, place staples in a row spaced approximately 12 in (300 mm) apart.

C. Steep Slopes

The Engineer may specify additional staples or check slots in waterways where slopes are steep or large water volumes or velocities are anticipated.

D. Asphalt Emulsion

The Contractor may apply an asphalt emulsion instead of staples to anchor the blanket.

Apply the bituminous material uniformly over the mat at approximately the following rates:

- 0.12 gal to 0.15 gal/yd² (0.5 L to 0.7 L/m²) for slopes
- 0.24gal to 0.30 gal/yd² (1 L to 1.4 L/m²) or waterways

After the emulsified asphalt has broken and becomes tacky, apply a light layer of sand or pulverized soil to the treated areas, if directed by the Engineer. This application prevents the treated area from sticking to anything that contacts it. Do not apply sand or soil in quantities that would damage the newly planted areas.

712.3.06 Quality Acceptance

General Provisions 101 through 150.

712.3.07 Contractor Warranty and Maintenance

Maintain treated areas to the Engineer’s satisfaction until Final Acceptance.

712.4 Measurement

The quantity of fiberglass blanket being paid for is the number of square yards (meters), surface measured, completed and accepted. The 2 in (50 mm) side laps and the blanket in the anchor slot are not included in the measurement, but are considered incidental to the work. Treated slopes and treated waterways are measured separately.

712.4.01 Limits

General Provisions 101 through 150.

712.5 Payment

This work will be paid for at the Contract Price per square yard (meter) for fiberglass blanket, complete in place and accepted. Payment is full compensation for furnishing and installing the blanket according to this Specification and maintaining the blanket. Preparing the area and grassing will be paid for according to Section 700.

Payment will be made under:

Item No. 712	Fiberglass blanket, (slopes)	Per square yard (meter)
Item No. 712	Fiberglass blanket, (waterways)	Per square yard (meter)

712.5.01 Adjustments

General Provisions 101 through 150.

Section 713—Organic And Synthetic Material Fiber Blanket

713.1 General Description

This work includes furnishing and placing straw, excelsior, coconut fiber, wood fiber, or synthetic blankets over previously prepared and permanently grassed areas as shown on the Plans or as directed by the Engineer.

713.1.01 Definitions

- Straw Blanket: A machine-produced blanket of clean, weed-free, consistently thick straw from agricultural crops. The straw is evenly distributed over the entire area of the blanket.
- Excelsior Blanket: A machine-produced mat of curled wood excelsior. Eighty percent consists of 6 in (150 mm) or longer fiber evenly distributed over the entire blanket.
- Coconut Fiber Blanket: A machine-produced blanket of 100 percent coconut fiber evenly distributed over the entire blanket.
- Wood Fiber Blanket:

  Type I—A machine-produced blanket manufactured with reprocessed wood fibers to a consistent thickness.

  Type II—A hydraulically applied bonded fiber matrix which upon drying, adheres to the soil in the form of a continuous 100 percent coverage, biodegradeable erosion control blanket
- Synthetic Fiber Blanket—A machine produced uniform blanket of ultraviolet degradable polypropylene staple fibers reinforced with ultraviolet degradable polypropylene netting.

713.1.02 Related References

A. Standard Specifications

General Provisions 101 through 150.

B. Referenced Documents

General Provisions 101 through 150.

713.1.03 Submittals

Use approved materials from QPL 62 without further testing. Otherwise, submit materials for testing before use.

713.2 Materials

Use blankets that meet the following requirements for placement on slopes and waterways. For a list of organic material fiber blankets, see QPL 62.

A. Straw Blanket

Use blankets at least 48 in (1.2 m) wide and at least 3/8 in (9 mm) thick with a minimum dry weight of 0.5 lb/yd² (270 g/m²) and a stitch pattern and row spacing of no more than 2 in (50 mm). Have the top side covered with a photo-degradable plastic mesh having a maximum mesh size of 5/16 by 5/16 in (8 mm by 8 mm). The mesh will be sewn to the straw with biodegradable thread.

Use this blanket on slopes only.

B. Excelsior Blanket

Use a smolder-resistant blanket with the top side clearly marked. Use a blanket at least 48 in (1.2 m) wide and 1/4 in (6 mm) thick with a minimum dry weight of 0.8 lb/yd² (430 g/m²) and a stitch pattern and row spacing of no more than 2 in (50 mm).

Slopes: Have the top side covered with a photo-degradable plastic mesh having a maximum mesh size of 1-1/2 by 3 in (38 by 75 mm).

Waterways: Have the top and bottom sides of the blanket covered with a photodegradable plastic mesh having a maximum mesh size of 1 ½ x 3 in (38 x 75 mm), sewn to the fiber with biodegradable thread or otherwise bonded as approved by the Engineer.

C. Coconut Fiber Blanket

Use a blanket at least 48 in (1.2 m) wide and 1/4 in (6 mm) thick with a minimum dry weight of 0.5 lb/yd² (270 g/m²) and a stitch pattern and row spacing of no more than 2 in (50 mm). Use the blanket in waterways only.

Ensure that both sides of the blanket are covered with a photo-degradable plastic mesh with a maximum of 5/8 by 5/8 in (19 by 19 mm). Have the mesh sewn to the fiber with a breakdown-resistant synthetic yarn.

D. Wood Fiber Blanket

Type I

- Use a machine produced blanket manufactured to a consistent thickness using reprocessed wood fibers.
- Use a blanket at least 48 in (1.2 m) wide with a minimum dry weight of 0.35 lb/yd². (190 g/m²). Use the blanket on slopes only.
- Ensure that the top side of the blanket is covered with a photo-degradable plastic mesh with a maximum mesh size of 5/8 by 3/4 in (16 by 19 mm) securely bonded to the mat.
- Ensure that the fibers do not contain a growth that inhibits germination.

Type II

- Ensure the bonded fiber matrix is composed of long strand wood fibers or cellulosic-based fibers held together by a bonding agent, which, upon drying, becomes insoluble and non-dispersible.
- Apply the matrix at the following rates:

Application Rate	Slope
3,000 lbs/acre (3.4 Mg/ha)	4:1
3,600 lbs./acre (4.1 Mg/ha)	2:1
4,000 lbs./ acre (4.5 Mg/ha	1:1

- Do not apply the bonded matrix on saturated soils or immediately before, during or after rainfall. Allow the matrix to dry for at least 24 hours after installation. After drying period, ensure that the bonded fiber matrix does not inhibit the germination or growth of plants beneath and through the formed matrix blanket and that it does not form a water insensitive crust.
- If bonded fiber matrix is to be used, the application of straw mulch for grassing operations is not required.

E. Synthetic Fiber Blanket

Use a blanket having a minimum net size of 5/8 x 3/4 inch (16 x 19 mm). Ensure the netting is securely bonded to the blanket and that the blanket conforms to the following physical properties:

PROPERTY	MINIMUM VALUE	TEST METHOD
Weight	1 oz/sq. yd (34 g/m^2)	
Roll Width	48 inch (1.2 m	
Tensile Strength Length	6 lbs./in	ASTM D 1682 [6” (150 mm) strip)]

Use Synthetic fiber blanket on slopes only.

F. Anchoring Staples

Use anchoring staples made from minimum 11-gauge wire, formed into a U shape. The legs will be at least 6 in (150 mm) long and the crown at least 1 in (25 mm) wide. Use staples rigid enough to penetrate the soil without distortion.

713.2.01 Delivery, Storage, and Handling

General Provisions 101 through 150.

713.3 Construction Requirements

713.3.01 Personnel

General Provisions 101 through 150.

713.3.02 Equipment

General Provisions 101 through 150.

713.3.03 Preparation

Before placing the blanket, complete the grassing operations, smooth the area, and remove stones, lumps, roots, or other material that would prevent the blanket from laying snugly on the soil.

713.3.04 Fabrication

General Provisions 101 through 150.

713.3.05 Construction

A. Placing Blanket

Place blankets or mats vertically on slopes, beginning at the top of the slope and extending to the bottom of the slope. Horizontal installation of the blankets is not permitted.

Place the blanket within 24 hours after planting and before rain or watering. Place the blanket on slopes and waterways as follows:

1. On Slopes

   Unroll the blanket with the netting on top and the fibers contacting the soil over the entire slope. When using two or more blankets to cover an area, overlay the joint 4 in (100 mm) and staple through the joint. Overlap the ends of the blanket at least 6 in (150 mm) with the upgrade section on top and staple through the overlap.

2. In Waterways

   In waterways, ditches, flumes, and channels unroll the blanket with netting sewn on both sides and place in contact with the soil beginning at the downstream terminal and progressing upstream of the blanket according to the Construction Detail for Permanent Soil Reinforcing Mat.

   Allow a longitudinal seam only if the blankets overlap at least 6 in (150 mm) and are securely stapled. Overlap ends of the blanket at least 6 in (150 mm) with the upgrade section on top.

   Insert 12 in (300 mm) of the upslope end of the first row of blankets into a 6 in (150 mm) deep anchor slot. Staple the blanket in the slot bottom, backfill the slot, and solidly tamp.

B. Stapling

Drive staples vertically into the ground to anchor the plastic mesh. Place the staples approximately 2 yd (2 m) apart on each side of the blanket and add one row in the center alternately spaced between each side staple.

Where blankets lay side to side, place each staple so that half of the staple anchors mesh from each blanket.

At the beginning of a blanket, space staples approximately 12 in (300 mm) apart in a row.

C. Steep Slopes

The Engineer may specify additional staples or check slots in waterways where slopes are steep or large water volumes and/or velocities are anticipated.

713.3.06 Quality Acceptance

General Provisions 101 through 150.

713.3.07 Contractor Warranty and Maintenance

Maintain the blanket installation throughout the life of the Contract. If before Final Acceptance any staples become loose or lift up or if the blanket becomes loose, torn, or undermined, then fix the problem by reshaping, regrassing, refertilizing, or replacing damaged areas. Repairs are done without additional compensation.

713.4 Measurement

Straw blanket excelsior blanket, coconut fiber blanket, wood fiber blanket, or synthetic blanket, installed and accepted is measured for payment by the square yard (meter). Laps and blanket in the anchor slots are not measured. They are considered incidental to the work.

713.4.01 Limits

General Provisions 101 through 150.

713.5 Payment

The preliminary preparation of the areas on which the blanket is to be placed, including seeding or sodding, will be paid for under the appropriate Contract Items.

Straw blanket excelsior blanket, coconut fiber blanket, wood fiber blanket or synthetic fiber blanket will be paid for at the Contract Unit Price per square yard (meter). Payment is full compensation for the construction of the Item including all laps, materials, equipment, tools, labor, incidentals, and maintenance.

Payment will be made under:

Item No. 713	Straw blanket (slopes)	Per square yard (meter)
Item No. 713	Excelsior blanket (slopes)	Per square yard (meter)
Item No. 713	Excelsior blanket (waterways)	Per square yard (meter)
Item No. 713	Coconut fiber blanket (waterways)	Per square yard (meter)
Item No. 713	Wood fiber blanket (slopes)	Per square yard (meter)
Item No. 713	Synthetic fiber blanket (slopes)	Per square yard (meter)

713.5.01 Adjustments

General Provisions 101 through 150.

Section 714—Jute Mesh Erosion Control

714.1 General Description

This work includes furnishing and placing jute mesh over previously prepared grassed areas according to the Plans or as directed by the Engineer.

714.1.01 Definitions

Jute Mat: A mesh matting made of jute yarn.

714.1.02 Related References

A. Standard Specifications

Section 106—Control of Materials

B. Referenced Documents

General Provisions 101 through 150.

714.1.03 Submittals

Provide a materials certification according to Subsection 106.05 that the materials meet the Specifications.

714.2 Materials

Ensure that materials conform with Subsection 106.05 and meet the requirements below.

A. Jute Mat

Use jute mat made of unbleached, undyed, and loosely-twisted yarn. The unit yarn weight shall be from 0.90 to 1.50 lb/yd² (488 to 814 g/m²). A 48 in (1.2 m) width shall show between 76 and 80 warpings, and a 36 in (900 mm) length shall show between 39 and 43 weftings. Furnish woven mesh strips of at least 45 in (1.1 m).

B. Anchoring Staples

Cold-drawn wire14 gauge (2 mm) or wider in diameter, formed into a U shape from a wire 12 in (300 mm) or longer.

714.2.01 Delivery, Storage, and Handling

General Provisions 101 through 150.

714.3 Construction Requirements

714.3.01 Personnel

General Provisions 101 through 150.

714.3.02 Equipment

General Provisions 101 through 150.

714.3.03 Preparation

Before placing jute mesh, complete grassing and leave the area in the following condition:

- Smooth
- Uniform
- Free of stones, lumps, or roots
- Free of other material that prevents mesh from snugly contacting the underlying soil

If erosion occurs after attaining the required surface area and contour, repair the area before placing mesh.

714.3.04 Fabrication

General Provisions 101 through 150.

714.3.05 Construction

A. Placing Mesh

After grassing, place jute mesh in an area indicated on the Plans or as directed by the Engineer.

Place mesh according to the Plans and the following requirements:

1. Roll the mesh out in the direction of flow unless the downstream end section connects to a drainage structure or paved ditch. In this case:
   a. Anchor the mesh in a 6 in (150 mm) deep trench adjacent to the structure.
   b. Roll the mesh upstream and use a junction slot to connect it to the mesh that has been rolled downstream.
2. Overlap adjacent strips by at least 6 in (150 mm).
3. Overlap adjoining ends by at least 6 in (150 mm).
4. For all overlaps, place the upstream section on top.
5. Use a Type 2 check slot at the downstream end of the jute mesh that does not connect to a structure.
6. Apply jute mesh without stretching. Lay it evenly but loosely on the soil surface.
7. To keep the area smooth, do not allow workers to walk directly on the seedbed before or after applying mesh.
8. Bury the up-channel end of each installation in a narrow, 6 in (150 mm) deep trench.
9. After burying the mesh, backfill, tamp, and staple the trench as shown on the Plans.
10. Where one roll of jute mesh ends and a second begins, use a junction slot to make the connection as shown on the Plans.
11. Space between the check or anchor slots is no more than 50 ft (15 m) on grades of 3 percent or less. On grades of more than 3 percent, ensure that the space between the check or anchor slots is no more than 25 ft (7.5 m).

B. Stapling

Hold matting strips firmly in place with one row of staples as follows:

1. Staple along each edge.
2. Staple each row along the middle.
3. Space staples no more than 3 ft (1 m) apart in each row.
4. Space the staples in the middle row alternately with those at the edges.

5. For strips wider than 60 in (1.5 m), space staples no more than 3 ft (1 m) apart.
6. At the ends of the covered area and at overlapping joints, space staples no more than 18 in (450 mm) apart.
7. Ensure that staples remain flush with the ground.

C. Rolling

After placing and stapling the jute mesh:

1. Firmly embed it in the soil by tamping or rolling.
2. Secure mesh that bridges over soil surface irregularities with extra staples to provide overall contact with the soil.

714.3.06 Quality Acceptance

General Provisions 101 through 150.

714.3.07 Contractor Warranty and Maintenance

Maintain jute mesh installation during the life of the Contract. Before acceptance of the Project, reshape, regrass, or refertilize if:

- Staples become loose or raised
- Mesh becomes loose, torn, or undermined

Repair or replace jute mesh without additional compensation.

714.4 Measurement

Jute mesh, complete in place and accepted, will be measured for payment by the square yard (meter), surface measure. Laps will not be measured but will be included in the overall area.

714.4.01 Limits

General Provisions 101 through 150.

714.5 Payment

Preparing areas to be meshed, including seeding or sodding, will be paid for under the appropriate Contract Items.

Jute mesh will be paid for at the Contract Unit price per square yard (meter), which is full compensation for constructing the Item and providing materials, equipment, tools, labor, maintenance, and incidentals.

Payment will be made under:

Item No. 714	Jute mesh	Per square yard (meter)

714.5.01 Adjustments

General Provisions 101 through 150.

Section 716—Erosion Control Mats (Slopes)

716.1 General Description

This work includes furnishing and placing erosion control mats (blankets) made of fiberglass, excelsior, jute mesh, bituminous treated roving, and straw, synthetic, or coconut over grass areas prepared according to Section 700 for permanent grass. Place according to the Plans or as directed by the Engineer. This specification is not applicable for waterways.

716.1.01 Definitions

General Provisions 101 through 150.

716.1.02 Related References

A. Standard Specifications

Section 712—Fiberglass Blanket

Section 713—Organic and Synthetic Material Fiber Blanket

Section 714—Jute Mesh Erosion Control

B. Referenced Documents

General Provisions 101 through 150.

716.1.03 Submittals

General Provisions 101 through 150.

716.2 Materials

General Provisions 101 through 150.

716.2.01 Delivery, Storage, and Handling

General Provisions 101 through 150.

716.3 Construction Requirements

716.3.01 Personnel

General Provisions 101 through 150.

716.3.02 Equipment

General Provisions 101 through 150.

716.3.03 Preparation

General Provisions 101 through 150.

716.3.04 Fabrication

General Provisions 101 through 150.

716.3.05 Construction

The contractor may elect to use either Section 712 – Fiberglass Blanket, Section 713 – Organic and Synthetic Material Fiber Blanket (except do not use Type II Wood Fiber Blanket), or Section 714 – Jute Mesh Erosion Control on slopes. All of the materials, construction and measurement portions of the noted sections apply to the type mat (blanket) selected for use.

Place blankets or mats vertically on the slopes beginning at the top of the slope and extending to the bottom of the slope. Horizontal installation of the blankets or mats is not permitted.

The application of mulch is not required for permanent grassing when one of the above noted mats or blankets is placed on the previously prepared and grassed slopes with 24 hours.

716.3.06 Quality Acceptance

General Provisions 101 through 150.

716.3.07 Contractor Warranty and Maintenance

General Provisions 101 through 150.

716.4 Measurement

Erosion control mats (Slopes) are measured according to the Specification sections referenced in Subsection 716.3.05.

716.4.01 Limits

General Provisions 101 through 150.

716.5 Payment

Erosion control mats (Slopes), measured as specified in Section 712, Section 713, or Section 714 will be paid for at the Contract Unit Price per square yard (meter).

This payment is full compensation for constructing the mat (blanket) and providing materials, equipment, tools, labor, and incidentals needed to maintain mats (blankets) for the life of the Contract or until a stand of grass has developed enough to prevent erosion.

Payment will be made under:

Item No. 716	Erosion control mats (slopes)	Per square yard (meter)

716.5.01 Adjustments

General Provisions 101 through 150.

Section 718—Wood Fiber

718.1 General Description

This work includes furnishing and placing wood cellulose fiber or wood pulp fiber in hydroseeding operations according to the Plans and Specifications, and as directed by the Engineer.

718.1.01 Definitions

General Provisions 101 through 150.

718.1.02 Related References

A. Standard Specifications

Section 106—Control of Materials

Section 700—Grassing

B. Referenced Documents

QPL 25

718.1.03 Submittals

Provide a materials certification according to Subsection 106.05 that the materials meet the Specifications.

718.2 Material

Use wood fibers that do not contain germination or growth-inhibiting factors and that meet the requirements of Subsection 106.05 and the following:

- When mixed with water, they disperse and suspend evenly
- After application, their color contrasts with the soil color to assist in identifying the area to be seeded
- When sprayed uniformly on the soil surface, they form an absorbent cover to distribute water to the underlying soil

- On an equilibrium air-dried basis, they contain a maximum of 15 percent water.
- They maintain a pH range of 4.5 to 8.5.

For a list of sources, see QPL 25.

718.2.01 Delivery, Storage, and Handling

Package wood fibers in moisture-resistant bags. Plainly mark the net weight of the packaged material on each bag.

718.3 Construction Requirements

718.3.01 Personnel

General Provisions 101 through 150.

718.3.02 Equipment

General Provisions 101 through 150.

718.3.03 Preparation

General Provisions 101 through 150.

718.3.04 Fabrication

General Provisions 101 through 150.

718.3.05 Construction

Apply enough materials to cover the ground evenly and thoroughly, as directed by the Engineer. Use hydraulic equipment to apply a homogenous water slurry that includes the proper amounts and kind of seed and fertilizer specified in Section 700. Mix the slurry during application.

718.3.06 Quality Acceptance

General Provisions 101 through 150.

718.3.07 Contractor Warranty and Maintenance

General Provisions 101 through 150.

718.4 Measurement

Wood fiber is not measured for separate payment.

718.4.01 Limits

General Provisions 101 through 150

718.5 Payment

This Work will not be paid for separately, but will be included in the payment for Permanent Grassing. (See Subsection 700.5.)

718.5.01 Adjustments

General Provisions 101 through 150.

Section 719—Silt Filter Bag

719.1 General Description

This Specification provides the requirements for furnishing and installing a silt filter bag to trap dissolved silt when pumping accumulated water from sediment basins or other areas where water may accumulate.

719.1.01 Definitions

General Provisions 101 through 150.

719.1.02 Related References

A. Standard Specifications

General Provisions 101 through 150.

B. Referenced Documents

ASTM D 3776

ASTM D 4632

ASTM D 4833

ASTM D 4491

ASTM D 3786

ASTM D 4991

ASTM D 4355

ASTM D 4751

ASTM D 4884

719.1.03 Submittals

General Provisions 101 through 150.

719.2 Materials

Ensure that all materials meet the requirements of the following:

A. Fabric

The silt filter bag fabric shall be a non-woven geotextile conforming to the following properties:

Property	Minimum Value	Test Method
Weight	10 oz/yd^2 (340 g/m^2)	ASTM D 3776
Tensile strength (minimum average of 5 specimens)	270 lb (1100 N)	ASTM D 4632
Puncture Resistance,	150 lb (730 N)	ASTM D 4833
Initial Flowrate	70 gal/min-ft^2 (3500 L/min- m^2)	ASTM D 4491
Bursting Strength	550 psi (3800 kPa)	ASTM D 3786
Permitivity	1.3 sec^{-1}	ASTM D 4991
UV Stability, 70% of initial Tensile Strength	173 lb (770 N)	ASTM D 4355
AOS Retained	100%	ASTM D 4751

B. Seams

All seams shall be sewn with a double needle machine using a high strength thread. The seams shall have a minimum average wide-width strength of 100 lb/in (17.5 N/mm) when tested according to ASTM D 4884.

C. Opening

Provide a silt filter bag with an opening to accommodate a 6” (150 mm) hose.

719.2.01 Delivery, Storage, and Handling

General Provisions 101 through 150.

719.3 Construction Requirements

719.3.01 Personnel

General Provisions 101 through 150.

719.3.02 Equipment

General Provisions 101 through 150.

719.3.03 Preparation

General Provisions 101 through 150.

719.3.04 Fabrication

General Provisions 101 through 150.

719.3.05 Construction

1. Place the silt filter bag on a #57 stone gravel bed sloped to ensure that the filtered water will exit at the desired location. Chose the exit location to prevent erosion.
2. Extend the pump hose past the inlet opening to ensure that the silt-laden water will discharge in the center of the bag. Ensure that the seal between the inlet and hose is watertight.
3. When the filter bag is full of silt and cannot readily pass any more water, use a new filter bag. If approved by the Engineer, bury the full filter bag on site or remove the top section of fabric and seed the exposed filtrate.

   The size and number of silt filter bags will be shown on the Plans or determined by the Engineer.

719.3.06 Quality Acceptance

General Provisions 101 through 150.

719.3.07 Contractor Warranty and Maintenance

Continue water filtration as directed by the Engineer.

719.4 Measurement

Silt filter bags measured for payment will be the actual number of bags used for filtration, complete and accepted.

719.4.01 Limits

General Provisions 101 through 150.

719.5 Payment

Payment will be made under:

Item No. 719.	Silt filter bag	Per each

719.5.01 Adjustments

General Provisions 101 through 150.

Section 720—Triangular Silt Barrier

720.1 General Description

The work covered by this section consists of furnishing, installing, and removing water-permeable triangular silt barriers used to remove suspended particles from drainage water.

720.1.01 Definitions

General Provisions 101 through 150.

720.1.02 Related References

A. Standard Specifications

Section 700

B. Referenced Documents

General Provisions 101 through 150.

720.1.03 Submittals

General Provisions 101 through 150.

720.2 Materials

A. General

Triangular silt barriers shall have a water-permeable urethane foam core surrounded by a woven geotextile fabric. The foam core shall have a triangular cross-section with a minimum height of 8 in (200 mm) in the center and a minimum base length of 16 in (400 mm). The other two cross-sectional sides shall be of equal length.

The fabric shall be wrapped around the foam core and shall extend beyond both sides of the triangle at least 24 in (600 mm).

B. Filter Fabrics

Filter fabrics shall be composed of strong rot-proof synthetic fibers formed into a woven fabric. The fabric shall be free of treatment or coating that might significantly alter its physical properties after installation.

The fabric shall contain stabilizers or inhibitors to make the filaments resistant to deterioration from exposure to sunlight or heat. The fabric shall be a pervious sheet of synthetic fibers oriented into a stable network so that the fibers retain their relative position to each other under normal handling, installation, and service conditions. Edges of the fabric shall be finished to prevent the outer yarn from pulling away from the fabric.

Fabrics shall be free of defects or flaws that would significantly affect its physical or filtering properties.

The fabric shall not be exposed to temperatures greater than 140 °F (60 ºC).

The fabric shall meet the following physical requirements:

Tensile Strength – Pounds (newtons (Min.) (ASTM D-4632) (1)	Warp – 260 (1155) Fill – 180 (800)
Elongation (% Max.) (ASTM D-4632)	40
AOS (Apparent Opening Size) (Max. Sieve Size) (ASTM D-4751)	#30 (600 µm)
Flow Rate gal/ min/ft^2 (Liters/min./m^2) (GDT 87)	175 (2850)

Ultraviolet Stability (2) (ASTM D-4632 after 300 hours weathering in accordance with ASTM D-4355)	80
Bursting Strength psi (kPa) (ASTM D-3786 Diaphragm Bursting Strength Tester)	175 (1200)
(1) Minimum roll average of five specimens. (2) Percent of required initial minimum tensile strength.	

C. Wire Staples

Fix the triangular silt barriers to the ground with wire staples. The staples shall be made of 11-gage wire with legs at least 6 in (150 mm) long.

720.2.01 Delivery, Storage, and Handling

During shipment and storage, protect the silt barrier with a heavy-duty covering that will protect the barrier from sunlight, mud, dust, dirt and debris.

720.3 Construction Requirements

720.3.01 Personnel

General Provisions 101 through 150.

720.3.02 Equipment

General Provisions 101 through 150.

720.3.03 Preparation

General Provisions 101 through 150.

720.3.04 Fabrication

General Provisions 101 through 150.

720.3.05 Construction

Install triangular silt barriers according to this Specification, as shown on the Plans or as directed by the Engineer.

1. Excavate a trench 4 to 6 in (100 to 150 mm) deep using equipment such as a trenching machine or motor grader; or, if equipment cannot be operated on site, by hand.
2. Secure the edge of the fabric into the trench with wire staples.
3. Install the fabric in the trench so that 4 to 6 in (100 to 150 mm) of fabric is against the side of the trench with 2 to 4 in (50 to 100 mm) of fabric across the bottom in the upstream direction.
4. Backfill the trench and compact it so that no flow can pass under the barrier.
5. Where the individual sections of triangular silt barrier meet, fix the fabric to the ground with wire staples at each joint location and at each end of the barrier.

The location and quantity of triangular silt barrier to be installed will be affected by the conditions that occur during the construction of the project.

The Engineer may increase, decrease or eliminate the quantity of triangular silt barrier. Do not consider these variations in quantity as alterations in the details of construction or a change in the character of the Work.

Triangular silt barrier may be substituted for baled straw.

720.3.06 Quality Acceptance

The Engineer will reject the barrier at the time of installation if it has defects, rips, holes, flaws, deterioration, or damage incurred during manufacture, transportation, or storage.

720.3.07 Contractor Warranty and Maintenance

Maintain the silt barrier until the Project is accepted or until the silt barrier is removed, and remove and dispose of silt accumulations. Maintenance and sediment removal is covered in Section 165. Remove and replace triangular silt barrier sections whenever effectiveness is reduced due to deterioration.

Remove triangular silt barrier unless the Engineer directs that it be retained. Barriers that have been removed will remain Contractor property and may be used at other locations if its condition is acceptable to the Engineer. When the silt barrier is removed, dress the area to give a pleasing appearance and seed and mulch the area according to Section 700.

720.4 Measurement

The quantity of triangular silt barrier to be paid for will be the actual number of linear feet (meters) of triangular silt barrier, measured in place from end to end of each separate installation, which has been completed and accepted.

720.4.01 Limits

General Provisions 101 through 150.

720.5 Payment

Triangular silt barrier measured as defined above will be paid for at the Contract Unit Price bid per linear foot (meter). Payment shall be full compensation for furnishing all materials; erecting and maintaining the barrier; removing accumulated silt except as described in Subsection 720.3.07; for all dressing and grassing, and for removing the barrier.

Payment for this Item will be made as follows:

75% of the Contract Price bid per linear meter will be paid when each barrier is complete in place.

25% will be paid at removal or acceptance.

Payment will be made under:

Item No. 720.	Triangular silt barrier	Per linear foot (meter)

720.5.01 Adjustments

General Provisions 101 through 150.

Section 721—Fabric Formed Concrete Rip Rap

721.1 General Description

Specifications for this work will be included elsewhere in the contract.

Section 725—Weed Control

725.1 General Description

This work includes furnishing and applying a bare ground herbicide under base or paving site(s) only, unless otherwise noted on the Plans or directed by the Engineer to prevent grass and other objectionable vegetation from growing.

725.1.01 Definitions

General Provisions 101 through 150.

725.1.02 Related Specifications

General Provisions 101 through 150.

725.1.03 Submittals

General Provisions 101 through 150.

725.2 Materials

Use an herbicide with the active ingredient: Indaziflam 19.05%.

725.2.01 Delivery, Storage, and Handling

General Provisions 101 through 150.

725.3 Construction Requirements

725.3.01 Personnel

General Provisions 101 through 150.

725.3.02 Equipment

General Provisions 101 through 150.

725.3.03 Preparation

General Provisions 101 through 150.

725.3.04 Fabrication

General Provisions 101 through 150.

725.3.05 Construction

Apply the following herbicide with 25 gallons per acre(hectare) of water under base or paving site(s)only, unless otherwise noted on the Plans or directed by the Engineer.

Indaziflam	7 oz./acre(207ml/ha) (active)

Follow all herbicide label recommendations when using this product.

725.3.06 Quality Acceptance

General Provisions 101 through 150.

725.3.07 Contractor Warranty and Maintenance

General Provisions 101 through 150.

725.4 Measurement

Weed Control using bare ground herbicide applied and accepted is measured by the square yard (meter). When weed control is required but not shown on the Plans as a Pay Item, the cost is included in the overall Contract Price.

725.4.01 Limits

General Provisions 101 through 150.

725.5 Payment

Payment when applicable will be made under:

Item No. 725	Weed Control	Per square yard (meter)

725.5.01 Adjustments

General Provisions 101 through 150.

Section 750—Rest Room Building

750.1 General Description

Specifications for this work will be included elsewhere in the Contract.

Section 751—Water Supply System

751.1 General Description

Specifications for this work will be included elsewhere in the Contract.

Section 752—Pneumatic Ejector Lift Station

752.1 General Description

Specifications for this work will be included elsewhere in the Contract.

Section 753—Waste Water Treatment Plant

753.1 General Description

Specifications for this work will be included elsewhere in the Contract.

Section 754—Outdoor Furniture

754.1 General Description

Specifications for this work will be included elsewhere in the Contract.

Section 755—Electrical Work

755.1 General Description

Only an approved Electrical Contractor may perform this work. This specification describes electrician qualifications, and does not apply to fiber optic cable or connections.

755.1.01 Definitions

Qualified Electrician: Either an electrician with a Class II license, issued by the Georgia State Construction Industry Licensing Board, or an electrician who has completed an approved four-year apprenticeship training program and is classified as a Journeyman Electrician.

755.1.02 Related References

A. Standard Specifications

Section 529—Navigation Lighting

Section 631—Permanent Changeable Message Signs

Section 632—Portable Changeable Message Signs

Section 637—Illuminated Sign System

Section 647—Traffic Signal Installation

Section 670—Water Distribution System

Section 680—Highway Lighting

Section 681—Lighting Standards and Luminaires

Section 682—Electrical Wire, Cable, and Conduit

Section 683—High Level Lighting Systems

Section 690—Static Scale System

Section 691—Weigh-in-Motion Scale System

Section 750—Rest Room Building

Section 751—Water Supply System

Section 752—Pneumatic Ejector Lift Station

Section 753—Waste Water Treatment Plant

Section 755—Electrical Work

Section 757—Well Pumps

Section 759—Water Storage Tanks

Section 760—Welcome Station Building

Section 761—Information Center Building

Section 762—Truck Weighing Station Building

Section 766—Irrigation System

Section 768—Truck Weigh Station Control Signs

Section 770—Truck Weigh Station Height Checking Device

Section 772—Truck Weigh Station Length Estimating Device

Section 774—Mobile Operations Office

Section 776—Check Point Shelter

Section 777—Truck Weigh Station Communication System

Section 795—Vehicle Maintenance Building

Section 796—Sewage Pumping Station

Section 797—Buildings

Section 936—Closed Circuit Television (CCTV)

B. Referenced Documents

General Provisions 101 through 150.

755.1.03 Submittals

General Provisions 101 through 150.

755.2 Materials

General Provisions 101 through 150.

755.2.01 Delivery, Storage, and Handling

General Provisions 101 through 150.

755.3 Construction Requirements

755.3.01 Personnel

Ensure the qualified electrician carries evidence of classification and presents it to the Engineer in charge of the construction.

Ensure a qualified electrician is present when any of the sections referred to under Subsection 755.1.02 are part of the Contract. Ensure electrical connections are being made or wire is being pulled.

755.3.02 Equipment

General Provisions 101 through 150.

755.3.03 Preparation

General Provisions 101 through 150.

755.3.04 Fabrication

General Provisions 101 through 150.

755.3.05 Construction

General Provisions 101 through 150.

755.3.06 Quality Acceptance

General Provisions 101 through 150.

755.3.07 Contractor Warranty and Maintenance

General Provisions 101 through 150.

755.4 Measurement

This work is not measured separately for payment.

755.4.01 Limits

General Provisions 101 through 150.

755.5 Payment

This work will not be paid for separately.

755.5.01 Adjustments

General Provisions 101 through 150.

Section 756—Drilled Wells

756.1 General Description

Specifications for this work will be included elsewhere in the Contract.

Section 757—Well Pumps

757.1 General Description

Specifications for this work will be included elsewhere in the Contract.

Section 758—Travel Trailer Sanitary Disposal Station

758.1 General Description

Specifications for this work will be included elsewhere in the Contract.

Section 759—Water Storage Tanks

759.1 General Description

Specifications for this work will be included elsewhere in the Contract.

Section 760—Welcome Station Building

760.1 General Description

Specifications for this work will be included elsewhere in the Contract.

Section 761—Information Center Building

761.1 General Description

Specifications for this work will be included elsewhere in the Contract.

Section 762—Truck Weighing Station Building

762.1 General Description

Specifications for this work will be included elsewhere in the Contract.

Section 763—Bus Pavilion

763.1 General Description

Specifications for this work will be included elsewhere in the Contract.

Section 765—Flag Pole

765.1 General Description

Specifications for this work will be included elsewhere in the Contract.

Section 766—Irrigation System

766.1 General Description

Specifications for this work will be included elsewhere in the Contract.

Section 767—Sprinkler System

767.1 General Description

Specifications for this work will be included elsewhere in the Contract.

Section 768—Truck Weigh Station Traffic Control Signs

768.1 General Description

Specifications for this work will be included elsewhere in the Contract.

Section 770—Truck Weigh Station Height Checking Device

770.1 General Description

Specifications for this work will be included elsewhere in the Contract.

Section 772—Truck Weigh Station Length Estimating Device

772.1 General Description

Specifications for this work will be included elsewhere in the Contract.

Section 774—Mobile Operations Office

774.1 General Description

Specifications for this work will be included elsewhere in the Contract.

Section 776—Check Point Shelter

776.1 General Description

Specifications for this work will be included elsewhere in the Contract.

Section 777—Truck Weigh Station Communications System

777.1 General Description

Specifications for this work will be included elsewhere in the Contract.

Section 778—Solar Application

778.1 General Description

Specifications for this work will be included elsewhere in the Contract.

Section 791—Water Intake Structure

791.1 General Description

Specifications for this work will be included elsewhere in the Contract.

Section 792—Display and Interior Furnishings

792.1 General Description

Specifications for this work will be included elsewhere in the Contract.

Section 795—Vehicle Maintenance Building

795.1 General Description

Specifications for this work will be included elsewhere in the Contract.

Section 796—Sewage Pumping Station

796.1 General Description

Specifications for this work will be included elsewhere in the Contract.

Section 797—Buildings

797.1 General Description

Specifications for this work will be included elsewhere in the Contract.

Section 798—Building Equipment

798.1 General Description

Specifications for this work will be included elsewhere in the contract.

Section 800—Coarse Aggregate

800.1 General Description

This section includes requirements for coarse aggregate. All aggregate shall be the specified type, class, and grade, and shall meet the requirements for the intended use.

800.1.01 Related References

A. Standard Specifications

Section 424—Bituminous Surface Treatment

B. Referenced Documents

AASHTO	ASTM
T 11	C 295
T 27	E 30
T 96	G 23
T 104	
T 303	

GDT 104

GDT 129

GDT 133

QPL 2

SOP 1

800.2 Materials

800.2.01 Coarse Aggregate

A. Requirements

The Contractor shall use the type, group, class, and grade of coarse aggregate specified. For coarse aggregate sources, see QPL 2.

1. Coarse Aggregate Types

Type	Characteristics
Crushed stone	Sound, durable rock particles.
Gravel	Sound, durable rock without damaging coatings.
Air-cooled blast furnace slag	Sound, durable particles with uniform density and quality, or other slags that have a good service record. Dry slag shall weigh at least 70 lb/ft³ (1120 kg/m³) compacted and shall contain less than 30% glassy particles by weight. Do not use slag as aggregate for Portland cement concrete.
Synthetic aggregate	Sound, durable, expanded clay, shale, or other manufactured product.

2. Coarse Aggregate Groups
   a. Group I: Limestone, dolomite, marble, or any combination thereof. Ensure Group I aggregates meet the abrasion requirement for Class A stone when used in Portland cement concrete of any type or class.
   b. Group II: Slag, gravel, granitic and gneissic rocks, quartzite, synthetic aggregate, or any combination thereof.
3. Classes

   Aggregates are classified by physical properties that determine how they are used.
   a. Do not blend aggregates that meet abrasion requirements with aggregates that do not meet requirements.
   b. “Class A“ and “Class B” aggregate used in Portland cement concrete, asphaltic concrete, and bituminous surface treatment shall meet these limits:

Percent Wear AASHTO T 96 (“B” Grading)		
	Class A	Class B
Group I Aggregates	0-40	41-55
Group II Aggregates	0-50	51-60

c. "Class B" aggregates used in all applications other than Portland cement concrete, asphaltic concrete, or bituminous surface treatment shall meet these limits:

Percent Wear AASHTO T 96 ("B" Grading)	
	Class B
Group I Aggregates	41-55
Group II Aggregates	51-65

4. Soundness

Test coarse aggregate used in Portland cement concrete, bituminous surfaces, bituminous bases, aggregate bases, or surface treatment with five alternations of the magnesium sulfate soundness test.

a. Use aggregate with a weight loss of less than 15 percent.

b. The 15 percent soundness loss for a Class "CS" concrete is waived if it has a 5-year service record.

c. If the material meets all the requirements except for the 15 percent soundness requirement, the material may be used in Zones 3 and 4 (see Subsection 424.3.05, "Construction Requirements") under the following conditions:

1) The aggregate in bituminous courses and in all types and classes of Portland cement concrete construction, except as stated in Group I, has a satisfactory five-year service record under similar service and exposure.

2) The Engineer's investigation shows that it equals or exceeds the quality of approved aggregate (in cases where the material's uniformity changes at the source, or does not have a five-year service record).

5. Grades

Use coarse aggregate that is well graded within the limits and sizes specified in Table 800.1.

6. Detrimental Substances

a. Detrimental substances include shale, weathered or decomposed rock, friable particles, or any substance that may be detrimental for the use intended.

b. Do not use any aggregate that can cause a deleterious reaction.

c. Do not use aggregates that contain Chrysotile (defined as fibrous serpentinite) as a temporary or permanent unbound surfacing for roads, nor as stabilizer for soil used as subgrade, base, or surface course.

d. Detrimental substances shall not exceed the following limits:

1) For Portland Cement Concrete:

Substance	Max % Allowed
Mica schist—Materials defined in ASTM C 294 as phyllite or schist. Use GDT 104 to analyze these materials.	5
Materials that pass the No. 200 (75 µm) sieve.	1.5
Flat and elongated pieces (with lengths more than five times the average thickness).	10
Sulfur content computed as sulfide sulfur (for bridge-type structures)—If the sulfur content exceeds 0.01%, do not use the aggregate unless it passes a petrographic analysis and a weathering test equivalent to 6 months or more of exposure.	0.01
Other local detrimental substances. (Any Combination)	2.0
NOTE: Do not use aggregate in Portland Cement concrete that is capable of producing a deleterious reaction when combined with Portland Cement.	

2) For Asphaltic Concrete:

Substance	Max. % Allowed
Mica schist—Materials defined in ASTM C 294 as phyllite or schist. Use GDT 104 to analyze these materials. (Use this requirement for Interstate Construction only.)	10
Flat or elongated particles (with lengths more than five times the average thickness).	10
Glassy particles (slag).	30
Other local detrimental substances. (Any combination)	2.0

3) For Bituminous Surface Treatment:

Substance	Max. % Allowed
Mica schist—Materials defined in ASTM C 294 as phyllite or schist. Use GDT 104 to analyze these materials.	10
Material finer than No. 200 (75 µm) sieve. #5 Stone #6 Stone #7 Stone #89 Stone	 0.5 0.7 0.7 1.0
Flat and elongated particles (with lengths more than five times the average thickness).	10
Glassy particles (slag).	30
Other local detrimental substances. (Any combination)	2

7. Ensure that gravel used in Asphaltic Concrete and Bituminous Surface Treatment meets the following additional requirements:
   - Consists of siliceous particles.
   - A minimum of 85%, by count, of the material retained on the No. 4 (4.75 mm) sieve has one or more fractured faces.
   - The fracture is for the approximate average diameter or thickness of the particle.
8. Ensure that No. 7 stone used in Bituminous Surface Treatment meets the following gradation:

¾” (19 mm)	½” (12.5 mm)	3/8” (9.5 mm)	No. 4 (4.75 mm)	No. 8 (2.36 mm)
100	85-100	40-70	0-15	0-5

B. Fabrication

General Provisions 101 through 150.

C. Acceptance

Test as follows:

Test	Method
Material that passes the No. 200 (75 µm) sieve	AASHTO T 11
Sulfur content	ASTM E 30, Leco method
Weathering	ASTM G 23
Petrographic analysis	ASTM C 295
Soundness (magnesium sulfate)	AASHTO T 104
Percent wear	AASHTO T 96

Test	Method
Aggregate gradation	AASHTO T 27
Reactivity	AASHTO T 303
Schist or phyllite	GDT 104
Flat and elongated particles	GDT 129
Friable Particles	GDT 133

D. Materials Warranty

General Provisions 101 through 150.

TABLE 800.1 - SIZES OF COARSE AGGREGATES

SIZE NO	NOMINAL SIZE SQUARE OPENINGS		AMOUNTS FINER THAN EACH LABORATORY SIEVE (SQUARE OPENINGS). %, BY WEIGHT										
	(1)	mm	2 ½”	2”	1 ½”	1”	¾”	½”	3/8”	No. 4	No. 8	No-16	No. 50
			63 mm	50 mm	37.5mm	25 mm	19 mm	12.5 mm	9.5 mm	4.75 mm	2.36mm	1.18 mm	300 µm
3	2-1	50 - 25	100	90-100	35-70	00-15	-----	00-5	----	-----	-----	-----	-----
357	2-No. 4	50 - 4.75	100	95-100	-----	35-70	-----	10-30	----	00-5	-----	-----	-----
4	1 ½ - 3/4	37.5 - 19	-----	100	90-100	20-55	00-15	-----	00-5	-----	-----	-----	-----
467	1 ½-No. 4	37.5 - 4.75	-----	100	95-100	-----	35-70	-----	10-30	00-5	-----	-----	-----
5	1-1/2	25 – 12.5	-----	-----	100	90-100	20-55	00-10	00-5	-----	-----	-----	-----
56	1-3/8	25 – 9.5	-----	-----	100	90-100	40-75	15-35	00-15	00-5	-----	-----	-----
57	1-No. 4	25 – 4.75	-----	-----	100	95-100	-----	25-60	-----	00-10	00-5	-----	-----
6	¾-3/8	19 – 9.5	-----	-----	-----	100	90-100	20-55	00-15	00-5	-----	-----	-----
67	¾-No. 4	19 – 4.75	-----	-----	-----	100	90-100	-----	20-55	00-10	00-5	-----	-----
68	¾-No. 8	19 – 2.36	-----	-----	-----	100	90-100	-----	30-65	05-25	00-10	0-5	-----
7	½-No. 4	12.5 – 4.75	-----	-----	-----	-----	100	90-100	40-70	00-15	00-5	-----	-----
78	½-No. 8	12.5 – 2.36	-----	-----	-----	-----	100	90-100	40-75	05-25	00-10	0-5	-----
8	3/8-No. 8	9.5 – 2.36	-----	-----	-----	-----	-----	100	85-100	10-40	0-10	0-5	-----
89	3/8-No. 16	9.5 – 1.18	-----	-----	-----	-----	-----	100	90-100	20-55	0-15	0-10	0-5
9	No. 4-No. 16	4.75 – 1.18	-----	-----	-----	-----	-----	-----	100	85-100	10-40	0-10	0-5

(1) In inches, except where otherwise indicated. Numbered sieves are those of the United States Standard Sieve Series.

Section 801—Fine Aggregate

801.1 General Description

This section includes the requirements for fine aggregate. All aggregate shall be the specified type, class, and grade.

801.1.01 Related References

A. Standard Specifications

Section 800—Coarse Aggregate

Section 441—Miscellaneous Concrete

B. Referenced Documents

AASHTO	ASTM
T 11	C 295
T 21	
T 27	
T 112	
T 303	

GDT 4

GDT 5

GDT 63

GDT 75

GDT 132

QPL 1

SOP 1

801.2 Materials

801.2.01 Fine Aggregate for Cushion

A. Requirements

Use the type, class, and grade of fine aggregate specified.

1. Types

   Use fine aggregate for cushion under granite curb or brick that is natural or manufactured sand with hard, strong, durable particles. Make manufactured sand from crushed gravel or stone meeting the requirements of Section 800. For a list of fine aggregate sources, see QPL 1.

2. Grades

   Use fine aggregate for cushion with less than 10 percent total silt and clay. Grade as follows:

Size	Percent by Weight
Passing No. 4 (4.75 mm) sieve	100
Passing No. 16 (1.18 mm) sieve	25-75
Passing No. 100 (150 µm) sieve	0-25

B. Fabrication

General Provisions 101 through 150.

C. Acceptance

Test as follows:

Sieve analysis—AASHTO T 27

D. Materials Warranty

General Provisions 101 through 150.

801.2.02 Fine Aggregate for Portland Cement Concrete of All Types and for Mortar

A. Requirements

1. Concrete and Mortar

   Use fine aggregate for concrete and mortar that consists of natural sand, manufactured sand, or blends of natural and manufactured sands, having hard, clean, strong, durable, uncoated particles, meeting the requirements of the Specifications.

2. Manufactured Sand

   Use manufactured sand made exclusively from crushed stone or gravel that meets **Section 800** requirements.

   Manufactured sand used in concrete for construction of Portland cement concrete pavement, approach slabs, and bridge decks, shall be made from Group II aggregates as specified in **Subsection 800.2.01.A.2**.

3. Miscellaneous Concrete

   Sand manufactured from synthetic aggregate meeting the requirements of **Section 800** may be blended with natural sands or manufactured sands made from crushed stone or gravel for use in miscellaneous concrete as described in **Section 441**.

   Blend at least 50 percent natural sand or manufactured sand made from crushed stone or gravel.

4. Concrete Sand

   Concrete sand that passes the No. 10 (2 mm) sieve shall have these characteristics:

Characteristic	Requirement
Durability index	70 or greater
Sand equivalent	70 or greater

5. Detrimental Substances

   Keep detrimental substances within these limits:

Substance	Maximum Percent by Weight
Clay lumps	0.5 maximum in total sample
Coal and lignite	0.5 maximum in total sample
All detrimental substances (any combination)	2.0 maximum in total sample

NOTE: Do not use fine aggregate in Portland cement concrete that is capable of producing a deleterious reaction with Portland cement

a. Provided the material passing the No. 16 (1.18 mm) sieve is petrographically determined to be essentially free of detrimental substances, test results for coal and lignite and other detrimental substances listed will be based upon a petrographic analysis of material retained on the No. 16 (1.18 mm) sieve.

b. Calculations will be based upon the weighted average for the total sample.

c. Other detrimental substances include constituents such as shale, weathered or decomposed rock, soft or friable particles, coated grains, or other substances that might be considered detrimental for the use intended.

6. Organic Impurities (natural sands only)

Ensure all fine aggregate is free from detrimental amounts of organic impurities.

Do not use materials that have colorimetric test (AASHTO T 21) results darker than the Reference Standard color plate.

7. Grades

Grade fine aggregates for Portland cement concrete and mortar as follows:

Size No.	Description	Total Percent by Weight Passing Each Sieve					
		3/ 8 in (9.5 mm)	No. 4 (4.75 mm)	No. 16 (1.18 mm)	No. 50 (300 µm)	No. 100 (150 µm)	No. 200 (75 µm)
10 NS	Natural concrete sand	100	95-100	45-95	8-30	1-10	0-3
20 NS	Natural mortar sand	100	100	90-100	15-50	0-15	0-5
10 SM	Standard manufactured concrete sand	100	95-100	45-95	8-30	1-10	0-4
10 FM	Fine manufactured concrete sand	100	95-100	45-95	15-42	6-22	0-9

B. Fabrication

General Provisions 101 through 150.

C. Acceptance

Test as follows:

Test	Method
Petrographic analysis	ASTM C 295
Material that passes a No. 200 (75 µm) sieve	AASHTO T 11
Organic impurities	AASHTO T 21
Sieve analysis	AASHTO T 27
Sand equivalent	GDT 63
Reactivity	AASHTO T 303
Durability index	GDT 75
Clay lumps	AASHTO T 112
Friable Particles	GDT 132
NOTE: The percent passing the No. 200 sieve (75 µm) for size 10FM will be based upon the total percent determined by AASHTO T-11 and AASHTO T-27. The percent passing the No. 200 sieve (75 µm) for sizes 10NS, 20NS and 10SM will be as determined by AASHTO T-11 only.	

D. Materials Warranty

General Provisions 101 through 150.

Section 802—Aggregates for Asphaltic Concrete

802.1 General Description

This section includes the requirements for fine and coarse aggregates used in asphaltic concrete.

802.1.01 Definitions

Fine Aggregate: All aggregate passing a No. 8 (2.36 mm) sieve

Coarse Aggregate: All aggregate retained on a No. 8 (2.36 mm) sieve

802.1.02 Related References

A. Standard Specifications

Section 800—Coarse Aggregate

Section 828—Hot Mix Asphaltic Concrete Mixtures

B. Referenced Documents

AASHTO T 27

AASHTO T 96

ASTM C 295

GDT 63

SOP 1

802.2 Materials

802.2.01 Fine Aggregate for Asphaltic Concrete

A. Requirements

Use the appropriate type, group, class, and grade of fine aggregate.

1. Types

   Use fine aggregate made of sharp, strong, angular material meeting the required performance characteristics when combined into a mixture.

   a. Ensure that the aggregate meets the following requirements:

      - Does not contain any deleterious substances.
      - Natural sand is free of organic matter, roots, or twigs.
      - Aggregate is manufactured from Class A or B crushed stone, gravel, slag, or synthetic aggregate that meets the requirements of Section 800.
      - A combination of natural and manufactured sands meets the requirements in Subsection 802.2.01.A.3 and Subsection 802.2.01.A.4 after being combined.

   b. Do not use crushed alluvial gravel as virgin aggregate in any mixture.

2. Groups

   Fine aggregate groups include:

   Group I—Limestone, dolomite, marble, or combination thereof

Group II—Gravel, slag, granitic and gneissic rocks, quartzite, natural sand, or a combination thereof

10. Sand Equivalent

Use these sand equivalent values:

Material	Sand Equivalent Value
Group I	At least 28
Group II	At least 40
Natural sand	At least 25
Blended sand*	Natural sand at least 20; combined blend at least 25
*Blended natural sands or natural sand blended with stone screenings that meet the Group I or Group II sand equivalent limits.	

4. Mica
   a. Use fine aggregate with no more than 35 percent free mica in asphaltic concrete surface mixes.
   b. When approved by the Engineer, use fine aggregate with more than 35 percent mica if blended with natural sand or sand manufactured from Group II aggregates. Ensure the blend has no more than 35 percent free mica and meets all other requirements of this Section, Section 800 and Section 828.
5. Aggregate for Stone Matrix Asphalt
   - Manufactured screenings will be considered as fine aggregate and shall contain no more than 20 percent by weight coarser than a No. 4 (4.75 mm) sieve.

B. Fabrication

General Provisions 101 through 150.

C. Acceptance

Test the fine aggregate as follows:

Test	Method
Aggregate gradation	AASHTO T 27
Sand equivalent	GDT 63
Mica content	ASTM C 295

D. Materials Warranty

General Provisions 101 through 150.

802.2.02 Coarse Aggregate for Asphaltic Concrete

A. Requirements

1. Types

   Ensure coarse aggregate meets the following requirements:
   - Class A or B crushed stone, gravel, slag, or synthetic aggregate as in Subsection 800.2.
   - Have uniform quality throughout without any deleterious substances.
   - Meet the required performance characteristics when combined into a mixture.

NOTE: Do not use alluvial gravel as virgin aggregate.

2. Groups

   Coarse aggregate shall be one of either group below as specified in the composition Table in Subsection 828.2.A.2:

   - Group I—Limestone, dolomite, marble, or combination thereof
   - Group II—Gravel, slag, granite and gneissic rocks, quartzite, or combination thereof

3. Aggregate for Stone Matrix Asphalt

   Use coarse aggregate that meets requirements of this Section and Section 800 except as follows:

   - Use Class A aggregate only with percent wear of each individual size not to exceed 45 percent based on the B grading of AASHTO T 96
   - Use aggregate which contains no more than 20 percent flat and elongated pieces (length greater than three times the average thickness) for that portion of the blend of all aggregate retained on the No. 4 (4.75 mm) sieve.

B. Fabrication

General Provisions 101 through 150.

C. Acceptance

Test as follows:

Test	Method
Coarse Aggregate	Subsection 800.2.01.C

D. Materials Warranty

General Provisions 101 through 150.

Section 803—Stabilizer Aggregate

803.1 General Description

This section includes the requirements for stabilizer aggregate, Types I through III, and Type IV stabilizer sand.

803.1.01 Related References

A. Standard Specifications

Section 800—Coarse Aggregate

B. Referenced Documents

AASHTO T 27

AASHTO T 96

GDT 63

SOP 1

803.2 Materials

803.2.01 Type I Stabilizer

A. Requirements

Use the appropriate type, class, and grade of stabilizer aggregate.

Use material of uniform quality that meets the requirements of **Section 800**, Class A or B aggregate, and **SOP 1**. Crushed concrete may be used provided it meets the requirements of **Section 800** that are applicable to Group 2 aggregates. Ensure the material meets the following gradation:

Sieve Size	% Passing by Weight
1-1/2 in (37.5 mm)	100
1 in (25 mm)	80-100
No. 8 (2.36 mm)	0-5

B. Fabrication

General Provisions 101 through 150.

C. Acceptance

Use the following test:

Test	Method
Sieve analysis	AASHTO T 27

D. Materials Warranty

General Provisions 101 through 150.

803.2.02 Type II Stabilizer Aggregate

A. Requirements

Use material that meets the requirements of Section 800, Class A or B aggregate, and SOP 1. Crushed concrete may be used provided it meets the requirements of Section 800 that are applicable to Group 2 aggregates.

The aggregate shall:

- Not contain overburden soil or disintegrated rock
- Have a sand equivalent value of at least 20 for material passing the No. 10 (2 mm) sieve
- Meet these gradation requirements:

Sieve Size	% Passing by Weight
2 in (50 mm)	100
1-1/2 in (37.5 mm)	95-100
No. 10 (2 mm)	15-45
No. 200 (75 µm)	0-12

B. Fabrication

General Provisions 101 through 150.

C. Acceptance

Test type II stabilizer as follows:

Test	Method
Sieve analysis	AASHTO T 27
Sand equivalent	GDT 63

D. Materials Warranty

General Provisions 101 through 150.

803.2.03 Type III Stabilizer Aggregate

A. Requirements

Use material that meets the requirements of Section 800, Class A or B aggregate, and SOP 1. Crushed concrete may be used provided it meets the requirements of Section 800 that are applicable to Group 2 aggregates.

Ensure the stabilizer aggregate does not contain soil or decomposed rock and that the Sand Equivalent value of the material passing the No. 10 sieve is not less than 20.

The aggregate shall meet these gradation requirements:

Sieve Size	% Passing by Weight
6 in (150 mm)	100
2 in (50 mm)	25-75
No. 10 (2 mm)	15-35

B. Fabrication

General Provisions 101 through 150.

C. Acceptance

Test Type III stabilizer as follows:

Test	Method
Sieve analysis	AASHTO T 27
Percent wear	AASHTO T 96

D. Materials Warranty

General Provisions 101 through 150.

803.2.04 Type IV Stabilizer Sand

A. Requirements

Make Type IV stabilizer sand from either natural sand, manufactured sand, or any combination of natural and manufactured sands.

1. If using manufactured sand, make the sand from Class A or B crushed stone, gravel, slag, or synthetic aggregate that meets Section 800requirements and conforms to SOP 1.
2. Type IV stabilizer sand shall have a sand equivalent of at least 35 for material passing the No. 10 (2 mm) sieve and shall also meet these gradation requirements.

Sieve Size	% Passing by Weight
No. 10 (2 mm)	60-100
No. 60 (250 µm)	5-40
No. 200 (75 µm)	0-20

B. Fabrication

General Provisions 101 through 150.

C. Acceptance

Test Type IV stabilizer as follows:

Test	Method
Sieve analysis	AASHTO T 27
Sand equivalent	GDT 63

D. Materials Warranty

General Provisions 101 through 150.

Section 804—Abrasives for Blast Cleaning

804.1 General Description

This section includes the requirements for abrasives used in blast cleaning.

804.1.01 Related References

A. Standard Specifications

General Provisions 101 through 150.

B. Referenced Documents

TCLP-EPA SWD 846-1311

AASHTO T 27 Aggregate Gradation

QPL 68

804.2 Materials

804.2.01 Abrasives

A. Requirements

1. Types
   a. Make the abrasives of low dusting mineral with a minimum of 10 percent by weight G–80 steel grit added, and blended homogeneously throughout the abrasive.
   b. Use a mineral abrasive listed on QPL 68.
   c. If you propose to use an alternative abrasive mixture, submit it to the Office of Materials for approval before use.
2. Detrimental Substances

Use abrasives that contain less than 100 ppm of any corrosive compound such as sulfate, chloride, or any EPA characteristic compound such as lead, chromium, or arsenic that can be detected by the EPA Toxicity Characteristic Leaching Procedure (TCLP).

3. Grades

   Ensure that the mineral abrasive used to blend with steel grit meets the grade for the sizes in the following table (Size A fits coal and copper slag; Size B fits staurolite abrasive)

Fractional Percent by Weight Retained on Each Sieve, by Sieve Size								
Size	No . 16 (1.18 mm)	No. 20 (850 µm)	No. 30 (600 µm)	No . 40 (425 µm)	No. 50 (300 µm)	No. 60 (250 µm)	No. 100 (150 µm)	PAN
A	0-10	5-35	25-50	20-45	5-35	0-10		0-10
B	0-2	0-2	0-2	0-5	5-25	5-25	30-60	0-20

.

4. Packaging
   a. Furnish abrasives for blasting in moisture-proof and mildew-resistant bags.
   b. Plainly show the size designation, requisition number, and purchase order number on the bags or on tags firmly affixed to each bag.

B. Fabrication

General Provisions 101 through 150.

C. Acceptance

The Department will take representative samples of the material sent to the Department, and test as follows:

Test	Method
Aggregate gradation	AASHTO T 27
Toxicity Characteristic Leaching Procedure (TCLP)	TCLP-EPA SWD 846-1311

D. Materials Warranty

General Provisions 101 through 150.

Section 805—Rip Rap and Curbing Stone

805.1 General Description

This section includes the requirements for rip rap and curbing stone. Construction and material will be covered under the Special Provisions.

805.1.01 Related References

A. Standard Specifications

General Provisions 101 through 150.

B. Referenced Documents

AASHTO T 96

AASHTO T 104

ASTM C 295

ASTM D 5519

805.2 Materials

805.2.01 Rip Rap

A. Requirements

1. Aggregate Quality

   All rip rap stone shall be made of sound, durable rock pieces that meet these requirements:

Aggregate Quality	Maximum Percent
Abrasion loss “B” grading	65
Soundness loss	15
Flat and slabby pieces (length five times more than the average thickness)	5
Weathered and/or decomposed pieces and shale	5

2. Gradation for Stone-Dumped rip rap Type 1 and Type 3:

Severe Drainage Conditions or Moderate Wave Action (Type 1)*		
Size By Volume	**Approx. Weight**	**Percent Smaller Than**
4.2 ft³ (0.12 m³)	700 lbs (320 kg)	100%
1.8 ft³ (0.05 m³)	300 lbs (135 kg)	50% - 90%
0.8 ft³ (0.02 m³)	125 lbs (55 kg)	20% - 65%
*Between 0% and 15% of the Type 1 rip rap shall pass a 4 in (100 mm) square opening sieve.		

General Use Normal Drainage Conditions (Type 3)*		
Size By Volume	**Approx. Weight**	**Percent Smaller Than**
1.0 ft³ (0.03 m³)	165 lbs (75 kg)	100%
0.1 ft³ (0.003 m³)	15 lbs (7 kg)	10% - 65%
*Between 0% and 15% of the Type 3 rip rap shall pass a 2 in (50 mm) square opening sieve.		

3. Stone for Plain Rip Rap

   The stones shall be clean and free of rock dust and fines.

   a. Process the stone so that the largest pieces have a volume of 2 ft³ (0.06 m³) or less.

   b. Ten percent or less of the total rip rap weight can consist of spalls that pass a 5 in (125 mm) sieve.

B. Fabrication

General Provisions 101 through 150.

C. Acceptance

Test as follows:

Test	Method
Percent wear	AASHTO T 96
Petrographic analysis	ASTM C 295
Soundness (magnesium sulfate)	AASHTO T 104

D. Materials Warranty

General Provisions 101 through 150.

805.2.02 Curbing Stone

A. Requirements

4. Type A:

   Provide Type A curb that meets these requirements:

   a. Curb thickness and height as shown on the Plans
   b. Cut in lengths of not less than 5 ft (1.5 m) nor more than 10 ft (3 m)
   c. Tops dressed to an even, smooth surface for the full length
   d. Have straight, even edges
   e. Top sloped ¼ in (6 mm) from back to front
   f. Have squared ends to permit joints to be constructed not more than ½ in (13 mm) wide for the full depth of the curb.
   g. Backface hand dressed at least 4 in (100 mm) below that part of the back that will be exposed
   h. Front face hand dressed to a depth of 1 in (25 mm) below the indicated elevation of the base course, pavement or gutter
   i. Have ends of circular curb sections cut along radial lines to permit joints to be constructed not more than ½ in (13 mm) wide
   j. Circular curb conforms accurately to the required radius
   k. Dressed surfaces do not contain projections or depressions more than 3/8 in (10 mm) from the plane surface of the curb

5. Type B:

   Provide Type B curb that meets these requirements:

   a. Dimensions shall be 5 in (125 mm) thick, 17 in (425 mm) deep, and 5 ft (1.5 m) long, unless otherwise specified.
   b. Front face to have a top margin draught with a smooth face 10 in (250 mm) deep
   c. Have a smooth face (Note: A quarry face may be considered a smooth face if free from holes and all bumps exceeding allowed tolerances are pointed level
   d. Tops of curbs present even, smooth faces for the full length
   e. Have squared joints that when abutted with adjacent sections, present no crack or joint exceeding ½ in (13 mm) in width
   f. Have ends of circular curb sections cut along radial lines to permit joints to be constructed not more than ½ in (13 mm) wide
   g. Circular curb conforms accurately to the required radius
   h. The allowable tolerances for Type B Curb dimensions are as follows:

Measurement Item	**Dimension & Tolerance**
Thickness	5 ¼ in (131 mm) +/- ¼ in (6mm)
Depth	17 in (425 mm) +/- 1 in (25 mm)
Top Surface	¼ in (6 mm) in 5 ft (1.5 m)
Side Surface	½ in (13 mm) in 5 ft (1.5 m)

B. Fabrication

General Provisions 101 through 150.

C. Acceptance

Test for Percent Wear according to AASHTO T 96

D. Materials Warranty

General Provisions 101 through 150.

Section 806—Aggregate for Drainage

806.1 General Description

This section includes the requirements for aggregate used for drainage.

806.1.01 Related References

A. Standard Specifications

Section 800 – Coarse Aggregate

B. Referenced Documents

AASHTO T 11

AASHTO T 27

GDT 4

806.2 Materials

806.2.01 Coarse Aggregate for Underdrains

A. Requirements

Use Class A or B coarse aggregate graded for size No. 89 in Table 800.1

B. Fabrication

General Provisions 101 through 150.

C. Acceptance

Test the aggregate as follows:

Test	Method
Sieve analysis	AASHTO T 27

D. Materials Warranty

General Provisions 101 through 150.

806.2.02 Crushed Stone Drainage Material

A. Requirements

Use Class A or B coarse aggregate that is graded as follows:

Sieve Size	Percent by Weight
Passing 2 in (50 mm)	100
Passing 1-1/2 in (37.5 mm)	95-100
Passing No. 10 (2 mm)	10-35
Passing No. 100 (150 µm)	0-10

B. Fabrication

General Provisions 101 through 150.

C. Acceptance

Test the crushed stone as follows:

Test	Method
Sieve analysis	AASHTO T 27

D. Materials Warranty

General Provisions 101 through 150.

806.2.03 Drainage Blanket

A. Requirements

Use Class A or B coarse aggregate that is graded as follows:

Sieve Size	Percent by Weight
Passing No. 10 (2 mm)	75-100
Passing No. 40 (425 µm)	25-50
Passing No. 60 (250 µm)	0-25
Passing No. 200 (75 µm)	0-8
Percent clay	0-5

B. Fabrication

General Provisions 101 through 150.

C. Acceptance

Test the aggregate as follows:

Test	Method
Sieve analysis	AASHTO T 11 and AASHTO T 27
Percent clay (8 minute elutriation test)	GDT 4

D. Material Warranty

General Provisions 101 through 150.

Section 809—Geogrid Materials

809.1 General Description

This Specification includes requirements for geogrid used in reinforced slopes and Mechanically Stabilized Embankment (MSE) Wall backfill.

809.1.01 Definitions

ASTM—American Society for Testing and Materials

GRI—Geosynthetic Research Institute

809.1.02 Related References

A. Standard Specifications

Section 106—Control of Materials

Section 626—Mechanically Stabilized Embankment Retaining Walls

Section 627—Mechanically Stabilized Embankment Retaining Wall—Contractor Design

B. Referenced Documents

AASHTO Task Force 27 Guidelines

U. S. Environmental Protection Agency, Method 9090—Chemical Compatibility

Association of Textile Chemists and Colorists, Method 30—Soil Burial

American associaltion of Textile Chemists and Colorists, Method 100—Preparation of Bacterial Broth

ASTM D 638

ASTM D 746

ASTM D 975

ASTM D 1238

ASTM D 1505

ASTM D 1525

ASTM D 2165

ASTM D 4355

ASTM D 4595

GRI—GG1

GRI—GG2-87

GRI—GG3a or GG3b

GRI—GG5

809.1.03 Submittals

Supply certification from the manufacturer showing the physical properties of the material used and conformance with the Specifications according to Subsection 106.05 of the Specifications.

Provide evidence from the manufacturer that the geogrid has been used successfully in installations with similar environmental and project conditions.

Obtain prior approval from the Office of Materials for all materials before use on construction.

Submit product specifications and test results to the Engineer for review and approval at least 45 days prior to intended use.

Do not begin placement of geogrid until the test results have been reviewed and approved by the Engineer.

809.2 Materials

A. Requirements

Use geogrid that is free of defects, punctures or flaws.

1. Geogrid for Reinforced Slopes

Use geogrid materials for reinforced slope construction that consist of the following:

Either a biaxial or uniaxial grid of polymer tensile elements manufactured into a regular network with apertures of sufficient size to allow for soil interlock.

A commercially prepared material of high tenacity polyester, high density polyethylene (HDPE) or polypropylene that is formed by stretching, heat welding, chemical welding, knitting, weaving or combinations of these methods.

Adhere to the following additional requirements:

a. Long Term Design Strengths

1.) Use geogrid that meets the minimum long-term design strengths (TLT) in the machine direction as indicated on the plans.

2.) Provide to the Engineer, in writing, the ultimate tensile strength of the grid (TULT) to verify the calculation in obtaining the long-term design loads (TLT).

These strengths are required for the Project and are determined based on the AASHTO Task Force 27 guidelines, which incorporates reduction factors to the ultimate strength of the geogrid for creep, site damage and durability.

3.) Calculate the long-term design strength using the following formula:

$$TLT = \frac{TULT \times CRC}{FC \times FD}$$

Where: TLT = Long-term design load—lb/ft (kg/m)

TULT	=	Geogrid ultimate tensile strength—lb/ft (kg/m)
CRC	=	Creep reduction coefficient
FC	=	Factor of safety to account for construction damage
FD	=	Factor of safety to account for product durability

b. Determine TULT

Determine the TULT based on wide strip tensile testing as noted in Subsection 809.2.02.

c. Determine Reduction Factors

Determine the reduction factors by the methods described in paragraphs a - e as follows:

1) Creep

a) Provide evidence from the manufacturer that the geogrid has been tested in laboratory creep tests according to the following criteria:

- Conducted for a minimum duration of 10,000 hours
- Tests were made for a range of load levels, including loads that the geogrid will be subjected to on the Project.

b) Ensure these tests are conducted as specified in Subsection 809.2.02.

c) Extrapolate the results extrapolated to a minimum design life of 75 years.

d) Determine the tension level at which the total strain of the geogrid is not expected to exceed 10% within the design life of 75 years (designated Tw).

e) Calculate the creep reduction factor as follows:

$$CRC = \frac{Tw}{TULT}$$

In the absence of test data, use the following creep reduction factors for different polymers:

Polymer Type	Creep Reduction Coefficient
Polyester	0.40
Polypropylene	0.20
Polyamide	0.35
Polyethylene	0.20

2) Construction Damage

a) Provide evidence from the manufacturer that the geogrid has been subjected to full scale construction damage tests using fill materials and construction procedures which are representative of those on the Project.

b) Excavate and test the grid according to Subsection 809.2.02.

c) Calculate the construction damage factor of safety using the following formula:

$$FC = \frac{TULT}{TC}$$

Where: FC = The construction damage factor

TC = The ultimate strength of the excavated grid that has been subjected to construction damage tests.

TULT = Geogrid ultimate tensile strength—lb/ft (kg/m)

d) If construction damage tests have been made, but with fills or construction procedures other than those represented on the Project, use a minimum value of FC of 1.25. Use a lower value of FC only if substantiated with damage tests using fills and construction procedures specific to the Project.

e) In the absence of any construction damage tests, use a FC value of 3.0.

3) Product Durability

a) Provide evidence from the manufacturer that the geogrid has been subjected to a series of durability tests to examine the effects of chemical and biological exposure on the grid, as described in the AASHTO Task Force 27 report.

b) Include the following in the durability studies:

- Effect on short-term and long-term mechanical properties.
- Changes to the following:
    - Reinforcement microstructure
    - Dimensions
    - Mass
    - Oxidation
    - Environmental stress cracking
    - Hydrolysis
    - Temperature
    - Plasticization
    - Surface micrology
    - Variations in the infrared spectrum analysis.
- A full investigation into the synergetic effects of different environments, particularly temperature. Subject the reinforcement to a working stress during the environmental test.

c) Ensure that geogrid used in the Work has been subjected to the environmental conditioning as outlined by the following, as a minimum:

- U.S. Environmental Protection Agency, Method 9090 – Chemical Compatibility.
- Association of Textile Chemists and Colorists, Method 30 – Soil Burial.
- American Association of Textile Chemists and Colorists, Method 100 – Preparation of Bacterial Broth.

d) Investigate the full range of soil environments to which the reinforcements may be potentially exposed and shall include as a minimum:

- pH in the range of 2, 4, 8, 12 – ASTM-D-2165
- Diesel oil – ASTM-D-975
- Fungi and Bacteria
- UV exposure 500 hrs – ASTM-D-4355
- Solvents and agents that are site specific.

In the performance of this testing the conditioning temperature is laboratory standard plus 1.5 times laboratory standard for the pH environments.

When no conditioning time period is given, use 30 days. Extrapolate results from short-term tests to the required design life of 75 years.

After the geogrid is subjected to these conditions, test the geogrid according to Subsection 809.2.02, and calculate the durability factor of safety by the following formula:

$$FD = \frac{TULT}{TD}$$

Where: TD= The ultimate strength of the geogrid subjected to product durability tests.

The minimum allowable value of FD is 1.10. In the absence of any geogrid durability tests, use a Durability Factor (FD) of 2.0.

4.) Pullout Resistance:

a) Provide evidence from the manufacturer that the geogrid has been subjected to full-scale pullout tests using backfill materials representative of those on the Project, as described in the AASHTO Task Force 27 report.

b) Base pullout resistance for design on a maximum of elongation of the embedded geogrid of ¾ in (19 mm) as measured at the leading edge of the compressive zone within the soil mass and not the ultimate pullout capacity.

c) Where insufficient data exists to evaluate the pullout resistance of geogrid as a function of soil type, conduct pullout tests on a project specific basis until the engineering behavior of the soil-reinforcement system is clearly defined.

d) Perform pullout using vertical stress variations (Sv) and reinforcement element configurations simulating actual project conditions.

e) Perform pullout tests according to Subsection 809.2.02 on samples with a minimum embedded length of 2 ft (600 mm). Perform the tests on samples with a minimum width of 1 foot (300 mm), or a width equal to a 4 longitudinal grid element, whichever is greater. Conduct the tests at 70 ^{o}F ±4 ^{o}F (21ºC ± 2 °C) at constant strain rates of 0.02 in (0.5mm) per minute.

Evaluate the pullout resistance by the following relation:

$$Tp = (2 \tan P) \times Sv \times Ls \times fd$$

Where:

Tp = Ultimate pullout capacity of tensile reinforcement—lb/ft (kg/m)

Sv = Vertical stress—lb/ ft^2 (kg/m^2)

Ls = Total length of geogrid beyond failure plane—ft (m)

P = Internal angle of friction of select backfill

fd = Equivalent coefficient of direct sliding derived from pullout tests

The equivalent coefficient of direct sliding, fd, may be related to the open area of the grid. In the absence of product specific data tested with site-specific granular backfill, estimate the from the following preliminary analysis:

% Open Area of Grid	Direct Sliding
80% more	0.5
51 to 79	0.7
50 or less	0.6

Ensure the pullout resistance, Tp, meets the following minimum strength requirement:

Tp = FPO **x** TLT with a displacement less than or equal to ¾ in (19 mm)

Where:

FPO = Factor of safety against pullout, equal to 1.5

TLT = Long-term design load—lb/ft (kg/m)

5.) Junction Strength:

a) Ensure that the summation of the shear strength of the joints occurring in a 12 in (300 mm) length of the grid sample is greater than the ultimate tensile strength of the element to which they are attached.

b) If this condition is not met, reduce the allowable reinforcement tension, Tw, by the ratio of the shear strengths to the ultimate strength.

c) Determine the ultimate tensile strength according to Subsection 809.2.02 and translate it into an ultimate strength per element by dividing the number of elements per foot (meter) of width.

d) Measure the junction strength according to Subsection 809.2.02.

2. MSE Wall Backfill Stabilizing Geogrid

Use geogrid materials for MSE wall construction that meets the following requirements:

- Is a biaxial grid of polymer tensile elements manufactured into a regular network with apertures of sufficient size to allow for soil interlock.
- Is a commercially prepared material of copolymerized high density polyethylene (HDPE) that is formed by stretching, heat welding, chemical welding, or combinations of these methods.

Has the following physical properties:

Physical Properties	
Property	**Requirement**
Melt Index	0.00176 - 0.00846 oz./10 min. (0.05 -0.24 grams/10 min.)
Density	59.0 – 59.6 pcf (0.945 - 0.955 grams/cc)
Tensile Strength	500 ksf (24 000 kPa) minimum
Ultimate Elongation	500% min.
Brittleness	-100 ^{o}F (-73 ^{o} C) maximum
Vicat Softening Point	260 ^{o}F (127 ^{o}C) minimum
Chemical Resistance	Resistant to all natural occurring alkaline and acidic soil conditions
Biological Resistance	Resistant to attack by bacteria and fungi

Has the following structural and mechanical properties:

MSE Wall Geogrid—Structural and Mechanical Properties	
Property	**Requirement**
Roll Length	100 ft.(30 m)
Roll Width	3 ft. or 4.5 ft. (1 m or 1.4 m)
Roll Weight	82 lb—3 ft roll (37.2 kg—1 m roll); or 114 lb—4.5 ft roll (51.7 kg—1.4 m roll)
Grid Pitch	0.6 in. x 4 in. (15 x 100mm)
Color	Black
Ultimate Tensile Strength	7.47 kips/ft (109 kN/m)
Extension @ Ult. Tensile Strength	17.0% maximum
Extension @ Design Load (0.4 Ult.)	3.0% maximum
Modulus in Tension	9000 ksi (62 000 MPa)
Thermal Stability	Stable over a range of -60 ^{o}F to 174 ^{o}F (-51 ^{o}C to 79 ^{o}C)
Note: Tests are based on 10 single rib samples extended at a constant rate of 1 inch (25 mm)/min. at a temperature of 68 ± 4 ^{o}F (20 ± 2 ^{o}C.)	

B. Fabrication

General Provisions 101 through 150.

C. Acceptance

Test geogrid according to the following:

Test Property	Test Method
Reinforced Slopes	
Tensile Strength—Wide Width	ASTM D 4595
Tensile Strength—Single Rib Strand	GRI – GG1
Junction Strength	GRI – GG2-87
Tensile Creep Testing	GRI – GG3a or GG3b
Geogrid Pullout	GRI –GG5
MSE Wall Backfill Stabilizing Geogrid	
Melt Index	ASTM D 1238
Density	ASTM D 1505
Tensile Strength	ASTM D 638
Ultimate Elongation	ASTM D 638
Vicat Softening Point	ASTM D 1525
Brittleness	ASTM D 746

D. Materials Warranty

General Provisions 101 through 150.

809.2.01 Delivery, Storage, and Handling

During shipment and storage, protect the grid from mud, dirt, dust, debris and exposure to ultraviolet light, including sunlight.

Section 810—Roadway Materials

810.1 General Description

This section includes the requirements for the materials used in roadway construction.

810.1.01 Related References

A. Standard Specifications

General Provisions 101 through 150.

B. Referenced Documents

GDT 4

GDT 6

GDT 7

GDT 67

810.2 Materials

810.2.01 Roadway Materials

A. Requirements

Do not use materials containing logs, stumps, sod, weeds, or other perishable matter.

1. Classes

The materials are divided into six major classes. Classes I, II, and III are further subdivided and identified by description and physical property requirements specified in the table below and in Table 1. Classes IV, V, and VI are identified by descriptive requirements.

Class I	
IA1 and IA2	Medium- to well-graded sand or clayey sand.
IA3	Fine-grained, silty, or clayey sand; usually less dense than IA1 or IA2. These soils have an excellent bearing capacity.
Class II	
IIB1, IIB2, and IIB3	Medium- to well-graded sandy clays, sandy silts, and clays with some mica. These soils generally have low volume change properties and good densities that serve well as subgrade material.
IIB4	Similar to IIB1, IIB2, and IIB3, but generally contain more mica and are more sensitive to moisture. The bearing value of these soils is less predictable. The soils may or may not be satisfactory for subgrade material. Analyze file data or

	run laboratory and/or field tests for Class IIB4 when considering it for a subgrade material.
Class III	
IIIC1, IIIC2, IIIC3 and IIIC4	Medium- to fine-graded micaceous sandy silts, micaceous clayey silts, chert clays, and shaly clays. Undesirable characteristics are high volume change properties and/or low densities. The bearing values are unpredictable. The Department recommends testing these materials in a laboratory, where possible, before use. One exception is District 6, where chert clay soils are prevalent. Chert clay soils (IIIC4) with less than 55% passing the No. 10 (2 mm) sieve may be considered suitable for subgrade materials. These soils are found generally in the northwest corner of the state in Dade, Walker, Catoosa, Whitfield, Murray, Chattooga, Gordon, and Floyd counties.
Class IV	Highly organic soils or peat, muck, and other unsatisfactory soils generally found in marshy or swampy areas.
Class V	Shaly materials that are not only finely laminated but have detrimental weathering properties and tend to disintegrate.
Class VI	Rock or boulders that cannot be readily incorporated into the embankment by layer construction, and that contain insufficient material to fill the interstices when they are placed.

Table 1: Physical Properties (Material Passing No. 10 (2.00 mm) Sieve)

Sub-Class	No. 60 (250 µm) Sieve % Passing	No. 200 (75 µm) Sieve % Passing	Clay, %	Volume Change, %	Maximum Dry Density lbs/ft^3 (kg/m^3)
Class I					
A1	15-65	0-25	0-12	0-10	115+ (1840+)
A2	15-85	0-35	0-16	0-12	100+ (1600+)
A3	15-100	0-25	0-12	0-18	98+ (1570+)
Class II					
B1		0-30	0-20	0-10	120+ (1920+)
B2		0-45	0-30	0-15	110+ (1760+)
B3		0-60	0-50	0-20	105+ (1680+)
B4		0-75		0-25	90+ (1440+)
Class III					
C1		0-75		0-30	90+ (1440+)
C2				0-35	80+ (1280+)
C3				0-60	80+ (1280+)
C4*					80- (1280-)
*Chert clay soils in District 6 having less than 55% passing the No. 10 (2.00 mm) sieve may be considered suitable for subgrade material.					

B. Fabrication

General Provisions 101 through 150.

C. Acceptance

Test as follows:

Test	Method
Soil gradation	GDT 4
Volume change	GDT 6
Maximum density	GDT 7 or GDT 67

D. Materials Warranty

General Provisions 101 through 150.

Section 811—Rock Embankment

811.1 General Description

This section includes the requirements for material used in rock embankment.

811.1.01 Related References

A. Standard Specifications

General Provisions 101 through 150.

B. Referenced Documents

AASHTO T 96

AASHTO T 104

ASTM C 295

811.2 Materials

811.2.01 Rock Embankment Material

A. Requirements

1. Use unweathered quarry-run stones, smaller than 4 ft (1.2 m), in any dimension as rock embankment material.
2. Include all other quarry stone sizes in the embankment. Limit rock fines to a maximum of 25 percent passing a 2 in (50 mm) sieve and 10 percent passing a No. 4 (4.75 mm) sieve.
3. Ensure that the material contains 5 percent or less shaly or flaky particles and meets abrasion requirements for a Class A or B coarse aggregate.
4. Ensure that the material has 15 percent or less loss in the magnesium sulfate soundness test.
5. Use the material only when approved by a petrographic rock analysis.

B. Fabrication

General Provisions 101 through 150.

C. Acceptance

Test as follows:

Test	Method
Abrasion	AASHTO T 96
Soundness (Magnesium Sulfate)	AASHTO T 104
Petrographic analysis	ASTM C 295

D. Materials Warranty

General Provisions 101 through 150.

Section 812—Backfill Materials

812.1 General Description

This section includes the requirements for four types of material used as backfill: foundation backfill, Types I and II, imperfect trench backfill, Type III, and mechanically stabilized wall backfill.

812.1.01 Related References

A. Standard Specifications

Section 810—Roadway Materials

B. Referenced Documents

AASHTO T 27

GDT 4

GDT 6

GDT 7

GDT 67

SOP 1

812.2 Materials

812.2.01 Foundation Backfill, Type I

A. Requirements

1. Use natural or artificial mixtures of materials consisting of hard, durable particles of sand or stone, mixed with silt, clay and/or humus material for Type I backfill.
2. Have the final blend of material meet the requirements of Class I or II soils in Subsection 810.2.01.

B. Fabrication

General Provisions 101 through 150.

C. Acceptance

Test as follows:

Test	Method
Soil gradation	GDT 4
Volume change	GDT 6
Maximum density	GDT 7 or GDT 67

D. Materials Warranty

General Provisions 101 through 150.

812.2.02 Foundation Backfill, Type II

A. Requirements

1. Type

   Use material meeting the requirements of Section 800, Class A or B aggregate, and SOP 1. Crushed concrete may be used provided it meets the requirements of Section 800 that are applicable to Group 2 Aggregates.

   Do not use backfill aggregate containing soil or decomposed rock.

2. Gradation

   Use material meeting the following gradation requirements:

Sieve Size	% Passing by Weight
1-1/2 in (37.5 mm)	100
1 in (25 mm)	80-100
No. 8 (2.36 mm)	0-5

B. Fabrication

General Provisions 101 through 150.

C. Acceptance

Test as follows:

Test	Method
Sieve analysis	AASHTO T 27

D. Materials Warranty

General Provisions 101 through 150.

812.2.03 Imperfect Trench Backfill, Type III

A. Requirements

1. Type

   Use material made from either of the following for Type III backfill:

   - A natural soil with a density of less than 95 lb/ft³ (1520 kg/m³) when tested with GDT 7
   - An artificial mixture of soil and organic material, such as hay, leaves, or straw

B. Fabrication

General Provisions 101 through 150.

C. Acceptance

The laboratory will:

1. Test the soil density with GDT 7.
2. Review the mixture and the percentages of each material, and approve a mixture suitable for the Project.

D. Materials Warranty

General Provisions 101 through 150.

812.2.04 Mechanically Stabilized Embankment Backfill

A. Requirements

Use material comprised of crushed stone, natural sand, or a blend of crushed stone and natural sand free of soils, organic or any other deleterious substances meeting the following additional requirements:

1 Crushed Stone

Use a material manufactured from Class A or B stone that is free of soil overburden, has a soundness loss of not more than 15 percent, and conforms to the requirements of SOP 1.

2. Natural Sand

Use **only** in conjunction with an approved, non-corrodible, extensible reinforcement. Use non-plastic material consisting of strong, hard, durable particles having a durability index of at least 70.

3. Gradation

Sieve Size	% Passing by Weight
4 in (100 mm)	100
2 in (50 mm)	80 -100
No. 10 (2 mm)	20 - 90*
No 200 (75 μm)	0 - 12
* Natural Sand may be 20 - 100	

4. Chemical

Ensure the material meets the following chemical requirements:

Test Method	Requirement
pH	6.0 – 9.5
Resistivity	>3000 ohms/cm
Chlorides	<100 ppm
Sulfates	<200 ppm
Note: These chemical requirements are not applicable to MSE walls stabilized with an approved, non-corrodible, extensible reinforcement.	

5. Maximum Dry Density

Use backfill material with a maximum dry density equal to or greater than the design unit weight shown on the plans. If no maximum dry density of the backfill material is shown, use a weight of 125 lb/ft^3 (2000 kg/m^3).

B. Fabrication

General Provisions 101 through 150.

C. Acceptance

Test the material as follows:

Test Method	Requirement
Percent Wear	AASHTO T96 (“A” Grading)
Sieve Analysis	AASHTO T 27
Material Passing No. 200 (75 μm) Sieve	AASHTO T 11
Durability Index	GDT 75
Maximum Dry Density	GDT 7 or GDT 24a, GDT 24b
Soundness (Magnesium Sulfate)	AASHTO T 104
pH	GDT 98, ASTM D 1293
Resistivity	GDT 98, ASTM D 1125
Chlorides	EPA Method 300
Sulfates	EPA Method 300

D. Materials Warranty

General Provisions 101 through 150.

Section 813—Pond Sand

813.1 General Description

This section includes the requirements for pond sand.

813.1.01 Related References

A. Standard Specifications

General Provisions 101 through 150.

B. Referenced Documents

GDT 4

GDT 6

GDT 7

GDT 67

AASHTO T 11 and AASHTO T 27

813.2 Materials

813.2.01 Pond Sand

A. Requirements

Make pond sand exclusively of granular crushed stone fines, relatively free of silt balls, that meet these requirements:

Gradation	
Sieve Size	**Percent Passing by Weight**
4 in (100 mm)	100
1-1/2 in (37.5 mm)	90-100
No. 200 (75 µm)	0-35
Other Properties	
Maximum dry density	90 lb/ft³ (1440 kg/m³) (minimum)
Volume change	0-25%

B. Fabrication

General Provisions 101 through 150.

C. Acceptance

Test as follows:

Test	Method
Gradation	AASHTO T 11 and AASHTO T 27
Maximum dry density	GDT 7 or GDT 67
Volume change	GDT 6

D. Materials Warranty

General Provisions 101 through 150.

Section 814—Soil Base Materials

814.1 General Description

This section includes the requirements for soil base materials, including topsoil or sand-clay, soil-cement, sand for bituminous stabilization, and chert.

814.1.01 Related References

A. Standard Specifications

Section 209– Subgrade Construction

Section 301– Soil-Cement Construction

Section 800–Coarse Aggregate

Section 810–Roadway Materials

Section 831–Admixtures

B. Referenced Documents

AASHTO T 89

AASHTO T 90

ASTM D 516

GDT 4

GDT 6

GDT 7

GDT 65

GDT 67

GDT 98

814.2 Materials

814.2.01 Topsoil or Sand-Clay

A. Requirements

1. Use topsoil or sand-clay that is a natural or artificial mixture of clay or soil binder with sand or other aggregate.
   - Do not use a mixture that contains substances detrimental to the material.
   - Obtain the materials from sources approved by the Engineer.
   - Ensure that the aggregate retained on No. 10 (2 mm) sieve (coarse aggregate) is of hard, durable particles.
2. Sand and Binder

   Use hard, sharp, durable, siliceous particles. Use binder made from quality clay.
3. Oversize

   Remove particles with diameters greater than 2 in (50 mm) before depositing the topsoil or sand-clay on the road.

   Remove particles with screens or grizzlies, or by hand if few oversized pieces exist. You may crush the oversized pieces and use them.
4. Topsoil

   Use a topsoil that is a natural, generally pebbly material occurring in shallow surface deposits on usually elevated areas.
5. Natural Sand-Clay

   Use a natural sand-clay that is a mixture of natural material, largely sand and clay in proper proportions, occurring in deposits of considerable depth.
6. Artificial Sand-Clay

   Use an artificial sand-clay that is largely a mixture of artificial sand and clay. You may make the mixture by combining clay or soil binder and sand or aggregate in the proper proportions.
7. Topsoil and Sand-Clay

   Use topsoil and sand- clay with the following properties:

Sieve Size	Amount
Passing 2 in (50 mm)	100% by weight
Passing 1-1/2 in (37.5 mm)	80-100% by weight

Passing No. 40 (425 µm)	Liquid Limit (LL) of 25 or less Plasticity Index (PI) of 9 or less

8. Ensure that material passing the No. 10 (2 mm) sieve meets the following requirements:

Sieve Size	Percent Passing by Weight
Passing No. 10 (2 mm) sieve	100
Passing No. 60 (250 µm) sieve	15-85
Passing No. 200 (75 µm) sieve	9-35
Clay	9-25
Volume change, max. percent	12
Maximum density, lb/ft³ (kg/m³)	110+ (1760+)

B. Fabrication

General Provisions 101 through 150.

C. Acceptance

The Department or Producer will test as follows:

Test	Method
Soil gradation	GDT 4
Volume change	GDT 6
Maximum density	GDT 7 or GDT 67
Liquid Limit	AASHTO T 89
Plastic Limit and Plasticity Index	AASHTO T 90

D. Materials Warranty

General Provisions 101 through 150.

814.2.02 Soil-Cement Material

A. Requirements

1. Ensure that the material for soil-cement base will:
   a. Meet the requirements of Subsection 810.2.01 for Classes IA1, IA2, IA3, or IIB1 with the following modifications:

Clay content	5 to 25%
Volume change	18% maximum
Liquid Limit	25% maximum
Plasticity Index	10% maximum
Maximum dry density	95 lb/ft³ (1520 kg/m³) minimum
Sulfates	4000 ppm maximum
pH	4.0 minimum

b. Be friable and not contain large amounts of heavy or plastic clay lumps, organic material, roots, or other substances that would interfere with how the Portland cement sets, plant production, or the finished surface of the base and meet the requirements of Subsection 301.3.05.A.2, “Pulverization” or Subsection 301.3.05.B.1, “Soil”.

c. Produce a laboratory unconfined compressive strength of at least 450 psi (3.1 MPa). To make the sample, mix in a minimum of 5% to a maximum of 9 percent Type I Portland cement, moist-cure for 7 days, and test with GDT 65.

2. Analyze the soil-cement design and create a Job Mix Formula for each Project where soil-cement base or subbase is specified. Have the Job Mix Formula approved by the Engineer before starting base or subbase construction.
3. You may use fly ash or slag that meets the requirements of Subsection 831.2.03 as admixtures for poorly reacting soils when the blend of soil and fly ash, or slag, meets the design requirements in this Subsection.
4. Ensure that subgrade material used underneath the soil-cement base meets the sulfate and pH requirements of this subsection (See Subsection 209.3.05.A.7).

B. Fabrication

General Provisions 101 through 150.

C. Acceptance

Test as follows:

Test	Method
Soil gradation	GDT 4
Volume Change	GDT 6
Maximum density	GDT 7 or GDT 67
Soil-Cement Design	GDT 65
pH	GDT 98
Sulfates	ASTM D 516
Liquid Limit	AASHTO T 89
Plastic Limit and Plasticity Index	AASHTO T 90

D. Materials Warranty

General Provisions 101 through 150.

814.2.03 Sand for Bituminous Stabilization

A. Requirements

1. Submit the bituminous stabilization sand materials to the laboratory in advance. If the laboratory approves the material, use it in constructing the sand- bituminous base course.
2. Use hard, durable particles without organic impurities such as roots or trash that may prevent the bituminous material from bonding with the individual particles.
3. Grade the material as follows:

Size	Percent Passing by Weight
Passing 1 in (25 mm) sieve	100
Passing No. 10 (2.00 mm) sieve	80-100
Passing No. 200 (75 µm) sieve	0-25

Clay	0-16

B. Fabrication

General Provisions 101 through 150.

C. Acceptance

Test as follows:

Test	Method
Soil gradation	GDT 4

D. Materials Warranty

General Provisions 101 through 150.

814.2.04 Chert

A. Requirements

Use materials that are natural mixtures of binder and chert rock with the following characteristics:

- Ensure that the aggregate retained on the No. 10 (2 mm) sieve (coarse aggregate) is a hard, durable chert rock meeting requirements for Class A or B coarse aggregate (see Subsection 800.2.01).

Use aggregate sizes in the final mix that can be properly placed, compacted, and finished.

- Ensure that the portion of material passing the No. 10 (2 mm) sieve is sand and clay or another satisfactory bonding material.

1. Gradation

   Grade the material as follows:

Size	Percent by Weight
Passing 1-1/2 in (37.5 mm) sieve	80-100
Passing No. 10 (2 mm) sieve	30-60
Material Passing No. 10 (2 mm) Sieve	
Passing No. 10 (2 mm) sieve	100
Passing No. 60 (250 µm) sieve	20-85
Passing No. 200 (75 µm) sieve (silt less clay)	5-25
Clay	15-50

   Ensure that the material passing the No. 40 (425 µm) sieve has a Liquid Limit (LL) of 35 or less and a Plasticity Index (PI) of 10 or less.

2. Stockpiles

   In all cases, stockpile the end product so that the material will be blended before any of it is loaded and delivered to the job.

   a. Make a stockpile big enough to uniformly blend the workable strata in the pit.
   b. The Engineer will determine the minimum volume of the stockpile. The Engineer will also be the sole authority as to the quality and workability of the various strata occurring in the pit.
   c. Maintain the minimum volume of the stockpile until the suitable material in the pit has all been stockpiled or until the material remaining in the stockpile is enough to complete the operation, as governed by haul limitations.

3. Equipment for Delivery

   Use equipment that will mix the material again while the material is being loaded for delivery.

B. Fabrication

General Provisions 101 through 150.

C. Acceptance

Test as follows:

Test	Method
Soil gradation	GDT 4
Liquid Limit	AASHTO T 89
Plastic Limit and Plastic Index	AASHTO T 90

D. Materials Warranty

General Provisions 101 through 150.

Section 815—Graded Aggregate

815.1 General Description

This section includes the requirements for material to be used for base, subbase, or shoulder course material, and includes graded aggregate, unconsolidated limerock base, and recycled concrete base.

815.1.01 Related References

A. Standard Specifications

Section 800—Coarse Aggregate

B. Referenced Documents

AASHTO T 11

AASHTO T 27

AASHTO T 193

ASTM C 295

ASTM D 3042

FL DOT Method FM5-515

SOP–1

QPL-2

GDT 63

EPA Method 3050/6010

EPA Method 1311

EPA Polarized Light Microscopy Method

EPA Transmission Electron Microscopy Method

815.2 Materials

815.2.01 Graded Aggregate

A. Requirements

1. Type

   Use graded aggregate base, subbase, or shoulder course material of uniform quality.

   a. Obtain the graded aggregate from an approved source or deposit that will yield a satisfactory mixture meeting all requirements of this Specification.

   b. Use material that is crushed or processed as a part of the mining operations, or, mix two grades of material so that when combined in the central mix plant, the mixture meets the specifications.

2. Retained on the No. 10 (2 mm) sieve

   Ensure that the material retained on the No. 10 (2 mm) sieve is Class A or B aggregate that meets the requirements of Section 800.

3. Passing the No. 10 (2 mm) sieve

   Ensure that any material passing the No. 10 (2 mm) sieve is relatively free of detrimental substances, such as soil overburden, decomposed rock, and/or swelling silts.

4. Stabilized Mixtures

   Ensure that mixtures to be stabilized react satisfactorily when mixed with Portland cement. The Engineer will specify the percentage of Portland cement to use.

5. Gradation

   Grade the graded aggregate base, subbase, or shoulder material as follows:

Sieve Size	Percent Passing By Weight
Group I Aggregates	
2 in (50 mm)	100
1-1/2 in (37.5 mm)	95-100
3/4 in (19.0 mm)	60-95
No. 10 (2 mm)	25-50 (Note 1, 2 and 3)
No. 60 (250 µm)	10-35
No. 200 (75 µm)	7-15
Group II Aggregates	
2 in (50 mm)	100
1-1/2 in (37.5 mm)	95-100
3/4 in (19 mm)	60-90
No. 10 (2 mm)	25-45 (Note 2 and 4)
No. 60 (250 µm)	5-30
No. 200 (75 µm)	4-11
NOTE 1: Group I aggregates having less than 37% passing the No. 10 (2 mm) sieve, shall have at least 9 percent passing the No. 200 (75 µm) sieve.	
NOTE 2: For graded aggregate stabilized with Portland Cement, 30-50 percent by weight shall pass the No. 10 (2 mm) sieve. All other requirements remain the same.	
NOTE 3: Material passing the No. 10 (2 mm) sieve shall have a sand equivalent of at least 20 for Group I aggregates.	

Sieve Size	Percent Passing By Weight
NOTE 4: Material passing the No. 10 (2 mm) sieve shall have a sand equivalent of at least 28 for Group II aggregates. Sand Equivalent values as low as 20 will be acceptable provided they are attributed exclusively to rock flour and the percent passing the No. 10 (2 mm) sieve does not exceed 40.	

B. Fabrication

General Provisions 101 through 150.

C. Acceptance

Test as follows:

Test	Method
Material that passes a No. 200 (75 µm) sieve	AASHTO T 11
Gradation	AASHTO T 27
Sand Equivalent	GDT 63

D. Materials Warranty

General Provisions 101 through 150.

815.2.02 Unconsolidated Limerock Base

A. Requirements

1. Type

   Use limerock base, subbase, or shoulder course material of uniform quality.

   a. To ensure uniform quality, the Department may restrict approved sources to specific mining areas, mining processes at a specific mining site, or both.

   b. Use a limerock base that yields a mixture to meet these Specifications.

   c. Use material that is crushed or processed as a part of the mining operations, or mix two grades of material so that when combined in the central mix plant the mixture meets the specifications.

   d. Use limerock base, subbase, or shoulder material that has the following characteristics:

Limerock bearing ratio	At least 100.
Deleterious substances	Do not allow chert or other extremely hard pieces that will not pass the 2 in (50 mm) sieve. Do not allow clay, sand, organics, or other materials in quantities that may damage bonding, finishing, or strength. All material passing the No. 40 (425 µm) sieve shall be non-plastic.
Carbonate content (magnesium or calcium)	At least 80%.

2. Gradation

   Grade the limerock base so at least 97 percent by weight passes the 3-1/2 in (90 mm) sieve.

   a. Grade the material uniformly to dust. The fine portion passing the No. 10 (2 mm) sieve shall all be dust of fracture.

   b. Crush or break the limerock base, if necessary to meet size requirements before placing the material on the road.

   c. Ensure that materials having soundness losses of 20% or less, comply with the following gradation requirements:

Gradation Requirements

SIEVE SIZE	PERCENT PASSINGBY WEIGHT
2” (50 mm)	100
1-1/2” (37.5 mm)	95-100
3/4” (19 mm)	60-95
No. 10 (2.00 mm)	25-45
No. 60 (250 μm)	10-30
No. 200 (75 μm)	7-20

B. Fabrication

General Provisions 101 through 150.

C. Acceptance

Test as follows:

Test	Method
Material that passes a No. 200 (75 μm) sieve	AASHTO T 11
Gradation	AASHTO T 27
Limerock bearing ratio	FL DOT Method FM5-515
Petrographic analysis	ASTM C 295
Total carbonates (insoluble residue)	ASTM D 3042

D. Materials Warranty

General Provisions 101 through 150.

815.2.03 Recycled Concrete Base

A. Requirements

1. Sources

   Use recycled concrete materials from sources approved by the Office of Materials and Research and listed on Qualified Products List 2. The criteria for approval will be as outlined in Standard Operating Procedure No. 1, “Monitoring the Quality of Coarse and Fine Aggregates” except the raw material will be recyclable concrete as specified herein rather than a geological deposit of aggregate.

   Type

   a. Recycled Concrete Base From Known Sources

      Use recycled concrete derived exclusively from Portland cement concrete pavement or structural concrete as a base, subbase, or shoulder course.

      Contaminants - Ensure the recycled concrete is free of foreign material such as wood, steel reinforcement, clay balls, soils, epoxy expansion material, delivery unit washout material, miscellaneous paving materials, and non-construction materials.

b. Recycled Concrete Base From Unknown Sources

Use recycled concrete derived from sources of demolition materials that comply with the following requirements as a base, subbase or shoulder course. Due to the condition and type of raw material used to produce this base and the resulting difficulty in producing a consistent product, refer to SOP-1 for environmental requirements and preferred production procedures.

Ensure the finished product does not exceed the regulatory limit for asbestos of 1% (based on microscopy) and the regulatory limit for lead of 5 ppm. These determinations must be made prior to shipping.

Ensure the California Bearing Ratio (CBR) of the finished product is not less than 140.

Contaminants –

Ensure the recycled concrete is substantially free of foreign materials such as steel reinforcement, wood, clay balls, soils, epoxy expansion material and non-construction materials.

Note - Substantially free, in the context of this specification, shall mean concentrations of the above mentioned foreign materials individually shall not exceed 0.1percent by weight, nor shall the total cocentration of these materials exceed 0.5 percent by weight.
Keep the following ancillary materials within these limits:

Substance	Maximum Percent by Weight
Brick	3
Asphaltic Concrete	7
Weathered Rock	2
Any combination of Brick, Asphaltic Concrete or Weathered Rock	10

2. Gradation

Ensure the finished product meets the quality and gradation requirements of Subsection 815.2.01for Group II aggregates, except the material finer than a #200 (75µm) sieve shall be 2 – 11%.

B. Fabrication

General Provisions 101 through 150.

C. Acceptance

Test as follows:

Test	Method
Gradation	AASHTO T 27
Material that passes a #200 (75µm) sieve	AASHTO T 11
Sand Equivalent	GDT 63
California Bearing Ratio (CBR)	AASHTO T 193
Petrographic Analysis	ASTM C 295
Total Lead	EPA Method 3050/6010
Toxicity Characteristic Leaching Procedure	EPA Method 1311
Asbestos	EPA Polarized Light Microscopy Method Or EPA Transmission Electron Microscopy Method

D. Materials Warranty

General Provisions 101 through 150.

Section 816—Soil Aggregate Bases

816.1 General Description

This section includes the requirements for material to be used as soil aggregate base.

816.1.01 Related References

A. Standard Specifications

Section 815–Graded Aggregate

B. Referenced Documents

AASHTO T 89

AASHTO T 90

GDT 4

GDT 6

GDT 7

GDT 13

816.2 Materials

816.2.01 Soil Aggregate

A. Requirements

1. Type
   Use a soil aggregate base, subbase, or shoulder base course material that is of uniform quality.
2. Material Retained on No. 10 (2 mm) sieve
   Ensure the material retained on the No. 10 (2 mm) sieve meets the requirements of Subsection 815.2.01.A.

NOTE: You may substitute Group I graded aggregate base that meets the requirements of Subsection 815.2.01.A for soil aggregate base.

3. Gradation
   Ensure the soil aggregate base, subbase, or shoulder material meets the following gradation:

Size	Percent by Weight
Passing 2 in (50 mm) sieve	100
Passing 1-1/2 in (37.5 mm) sieve	95-100
Passing 3/4 in (19 mm) sieve	60-97

Passing No. 10 (2 mm) sieve	25-55
Material passing No. 10 (2 mm) sieve	
Passing No. 10 (2 mm) sieve	100
Passing No. 60 (250 µm) sieve	15-85
Passing No. 200 (75 µm) sieve (silt less clay)	3-25
Clay (8 minutes suspension on elutriation test)	10-25

a. Ensure that the material passing the No. 10 (2 mm) sieve has a total volume change of 15 or less.

b. Ensure that the material passing the No. 40 (425 µm) sieve has a Liquid Limit (LL) of 25 or less and a Plasticity Index (PI) of 9 or less.

B. Fabrication

General Provisions 101 through 150.

C. Acceptance

Test as follows:

Test	Method
Gradation	GDT 4 and GDT 13
Volume change	GDT 6
Liquid limit	AASHTO T 89
Plastic limit and plasticity index	AASHTO T 90

D. Materials Warranty

General Provisions 101 through 150.

816.2.02 Soil Mortar for Soil Aggregate Base

A. Requirements

Use a soil mortar for soil aggregate bases of friable materials meeting these requirements:

Percent passing No. 200 (75 µm) sieve	0-65
Volume change	0-15
Maximum dry density	95 lb/ft^3+ (1520 kg/m^3 +)

B. Fabrication

General Provisions 101 through 150.

C. Acceptance

Test as follows:

Test	Method
Gradation	GDT 4
Volume change	GDT 6

Maximum dry density	GDT 7

D. Materials Warranty

General Provisions 101 through 150.

Section 817—Shoulder Material

817.1 General Description

This section includes the requirements for material used in shoulder construction.

817.1.01 Related References

A. Standard Specifications

Section 810—Roadway Materials

B. Referenced Materials

General Provisions 101 through 150.

817.2 Materials

817.2.01 Select Shoulder Material

A. Requirements

Unless otherwise shown on the Plans or in the Special Provisions, use shoulder material that meets the requirements in Subsection 810.2.01.A.1 for Class I soil.

B. Fabrication

General Provisions 101 through 150.

C. Acceptance

See Subsection 810.2.01.C.

D. Materials Warranty

General Provisions 101 through 150.

Section 818—Crushed Aggregate Subbase

818.1 General Description

Specifications for this work will be included elsewhere in the Contract.

Section 819—Fiber Stabilizing Additives

819.1 General Description

This Section covers the general requirements for fiber stabilizing additives incorporated into asphaltic concrete mixtures. These fibers are used to stabilize the asphalt film surrounding aggregate particles to reduce drain-down of the asphalt cement, use cellulose or mineral fiber stabilizer listed on QPL 77, Fiber Stabilizing Additives.

819.1.01 Related References

A. Standard Specifications

General Provisions 101 through 150.

B. Referenced Documents

AASHTO T 245

ASTM D 128

ASTM C 612

GDT 127

GDT 130

QPL 77

819.2 Materials

Use an approved mineral or cellulose fiber stabilizing additive currently listed in QPL 77. Approved additives shall meet the requirements below. Dosage rates below are typical ranges. Use the dosage rate prescribed in the Job Mix Formula, as approved by the Office of Materials.

A. Requirements for all fiber types

1. Use a fiber stabilizer of the type and properties appropriate to the plant's metering and delivery system.
2. When tested in a standard mixture according to GDT 127, the fiber stabilizing additive shall limit drain-down to not more the 0.2% of the weight of the mixture. For the purpose of evaluating these additives, the following test conditions apply.
   - The mixture tested shall consist of a standard No. 7 stone and 6.4% asphalt cement.
   - Mixing and compaction temperatures for the test shall be as prescribed in AASHTO T 245, Section 3.3.1.
   - Wet mixing time shall be 60 ± 2 seconds.
   - Un-separated fibers, determined by visual inspection of the mixture after the drain-down test, shall not exceed 5% of total fiber content.

B. Cellulose Fibers

Add cellulose fibers at a dosage rate between 0.2% and 0.4% by weight of the total mix, according to the approved Job Mix Formula. Fiber properties shall be as follows:

- Ash Content by ASTM D 128: 23% maximum non-volatile content
- pH: 7.0 to 12.0
- Moisture Content: 5.0% maximum

C. Cellulose Pellets

Use cellulose fiber stabilizing additive in pellet form that meets the requirements of Subsection 819.2.A and Subsection 819.2.B. Use pellets that disperse sufficiently at mixing temperature to blend uniformly into the asphalt mixture. Use pellets that do not exceed 0.24 in (6.0 mm) average pellet diameter. Pellets may contain binder ingredients such as asphalt cement, wax, or polymer. Do not use pellets if the binder ingredient exceeds 20.0% of the total weight of the pellets. Use binder that produces no measurable effect on the properties of the asphalt cement. Do not use fiber pellets which soften or clump together when stored at temperatures up to 122 ^{0}F (50 ^{0}C).

Add approved palletized fiber stabilizing additive at a dosage rate between 0.2% and 0.4% by weight of the total mix, according to the approved Job Mix Formula established by the Office of Materials.

NOTE: If the binder material constitutes more than 3% of the pellet weight, the dosage rate shall be based upon the net fiber content.

D. Mineral Fibers

Use mineral fibers made from virgin basalt, diabase, slag or other silicate rock. Add the fiber at a dosage rate prescribed in the approved Job Mix Formula, between 0.3% and 0.6% by weight of the total mix. Use approved mineral fiber from QPL 77, not exceeding 25 % shot content in accordance with ASTM C 612, as tested according to GDT 130:

E. Materials Warranty

General Provisions 101 through 150.

Section 820—Asphalt Cement

820.1 General Description

This section includes the requirements for asphalt cements prepared from crude petroleum.

820.1.01 Related References

A. Standard Specifications

General Provisions 101 through 150.

B. Referenced Documents

Standard Operating Procedure (SOP 4)

AASHTO R 28

AASHTO T 48

AASHTO T 179

AASHTO T 240

AASHTO T 313

AASHTO T 314

AASHTO T 315

AASHTO T 316

AASHTO TP70 / ASTM D7405

820.2 Materials

820.2.01 Asphalt Cement

A. Requirements

1. Type

   Use a material homogenous and water-free and will not foam when heated to 347 °F (175 °C).

   Ensure blend used to produce a specified performance grade meets the following requirements:

   - Is uniform and homogeneous without separation
   - Uses PG 64-22 or PG 67-22 described below for the base asphalt
   - Consists of production materials not being “air-blown”.
   - Contains < 0.5% acid (including Polyphosphoric Acid (PPA) modification, when approved by the Office of Materials.

2. Grade

   Use the various grades of asphalt cement meeting the requirements shown in the test requirements for Petroleum Asphalt Cements.

   Add Styrene-Butadiene-Styrene (SBS) or Styrene-Butadiene (SB) to neat asphalt to produce a binder meeting requirements for PG 76-22 when roadway ADT is equal to or greater than 100,000 for Stone Matrix Asphalt and Porous European Mix (PEM) or Open Graded Friction Course (OGFC) Mixtures.

   Styrene Butadiene Rubber (SBS) or Crumb rubber modified PG 76-22 is an acceptable alternative to SBS or SB modified asphalt cement at contractor’s discretion, when roadway ADT is less than 100,000, provided the SBR or crumb rubber modified asphalt cement meets the tests’ requirements of PG 76-22. For SBR modified PG 64-22 or PG 67-22 to meet PG 76-22, use only SBR currently approved on QPL-65 “Georgia’s List of Approved Latex Suppliers”. For crumb rubber modified PG 64-22 or PG 67-22 to meet PG 76-22, use 30 mesh size ambient or cryogenic ground tire rubber at minimum 10% of weight of total asphalt cement content. Ensure Trans-Polyoctenamer is added at 4.5% of the weight of the crumb rubber to achieve better particle distribution. Varying percentage blends of crumb rubber and approved additives may be used, at the discretion of the Office of Materials, provided the end product meets all specified requirements of PG76-22 including Phase Angle. Ensure the end product is homogenous and shows no separation or coagulation. Percentage of ambient or cryogenic ground tire rubber is neat asphalt source dependent to meet specification requirements for PG 76-22.

   The maximum Phase Angle requirement is not applicable to the crumb rubber modified PG 76-22 incorporating ≥ 10% crumb rubber with approved additive equivalent to 4.5% of crumb rubber (see notes f, g, i and j).

Test Requirements for Petroleum Asphalt Cements

Test And Method	Test Temperature				Original Binder	Residue Of Binder After:	
	PG 58-22 (Note e)	PG 64-22	PG 67-22	PG 76-22 (Note d)		Rolling Thin Film Oven, AASHTO:T 240	Pressure Aging AASHTO: R 28
Flash Point, Min., AASHTO T 48					446 °F (230 °C)		
Viscosity, Max., AASHTO T 316, (Note a)	275 °F (135 °C)				3Pa-S (3000CP)		
Mass Loss (%), Max., AASHTO T 240, (Note b)						0.5	
Dynamic Shear, G*/sin δ, AASHTO T 315, 10 Rad/Sec	136 °F (58 °C)	147 °F (64 °C)	153 °F (67 °C)	169 °F (76 °C)	≥ 1.0 kPa	≥ 2.2 kPa	
Dissipated Energy, Dynamic Shear, G*sin δ, AASHTO T 315, 10 Rad/Sec	72 °F (22 °C)	77 °F (25 °C)	80 °F (26.5 °C)	88 °F (31 °C)			≤ 5000 kPa
Creep Stiffness, 60 sec., AASHTO T 313, (Note c)	10 ° F (- 12 °C)						S ≤ 300 000 kPa m ≥ 0.300
Direct Tension, 1.0 mm/min., AASHTO T314, Failure Strain	10 ° F (- 12 °C)						Report
Multiple Stress Creep & Recovery (MSCR) test, ASTM D7405, AASHTO TP70 (proposed), $J_{nr\ 3.2}$ kPa, (Notes f, g, i and j)				64 °C		≤ 1.0	
Polymer Separation Test ASTM D7173 AASHTO T53 Softening Point (ºF) (ºC) [h]				(≤ 18 ºF) (≤ 10 ºC) Difference between top and bottom specimens			

Notes:

a. The Department may waive this requirement if the supplier warrants the asphalt binder can be adequately pumped and mixed at temperatures meeting all applicable safety standards.

b. Heat loss by AASHTO: T 179 may be accepted in lieu of mass loss by AASHTO: T 240.

c. If the creep stiffness is below 300,000 kPa, the direct tension test is not required. If the creep stiffness is ≥300,000 kPa, report the Direct Tension Failure Strain value. Satisfy the m-value requirement in either case.

d. Ensure the maximum Phase Angle measured by DSR is ≤ 75 degrees.

e. The maximum Mass Loss shall be ≤ 1%, when used in conjunction with Bituminous Surface Treatment (Section 424).

f. MSCR requirement is applicable to the SBR, Crumb Rubber & TOR (or other OMR approved additive) combination modified PG 76-22 asphalt cement. Additionally, ensure the materials meet all PG 76-22 requirements except for phase angle as detailed in sub-section 820.2.01.A.2.

g. Ensure MSCR requirement for Average Percent Recovery at 3.2 kPa is ≥ 35% for laboratory or terminally blended PG 64-22 or PG 67-22 modified using SBR or GTR to meet PG 76-22 requirements.

h. Polymer Separation Test is performed by the Department for SBR and crumb rubber modified PG 76-22.

i. PG 64-22 or PG 67-22 modified to meet PG 76-22 using crumb rubber, via dry method, will be evaluated using complete analysis for compliance with PG 76-22 requirements prior to mixture production using laboratory blended materials. PG 64-22 or PG 67-22 modified to meet PG 76-22 using crumb rubber via dry method, will be evaluated for compliance with original DSR testing requirements for PG 76-22 during mixture production using abson recovery in accordance with GDT 119 in compliance with AC sampling frequencies established in GSP 21 sub-section A.9.

j. PG 64-22 or PG 67-22 modified to meet PG 76-22 using crumb rubber, via the dry method, will be evaluated for MSCR (Jnr @ 3.2 kPa) requirements, in accordance with GDT 119, on AC samples obtained for project assurance at frequencies established in GSP 21 sub-section A.9.

Thoroughly blend the composite materials at the supply facility prior to being loaded into the transport vehicle if modification is required in accordance with 820.2.01. Ensure all blending procedures, formulation, and operations are approved by the Office of Materials.

3. Certification:

Provide certified test results from an approved, certified laboratory of blends for proposed PG asphalt for each specification characteristic of the asphalt cement proposed for shipment. Provide the certified results to the State Materials Engineer as required in Standard Operating Procedure (SOP 4).

The State Materials Engineer may interrupt production until test results are known in the event there is reason to suspect a sample will be outside specification limits. Mixture placed incorporating modified binders determined to not meet specification requirements may be subject to removal at the recommendation of the State Materials Engineer.

B. Materials Warranty

General Provisions 101 through 150.

Section 821—Cutback Asphalt

821.1 General Description

This section includes the requirements for asphalt cements that have been fluxed with petroleum distillates.

821.1.01 Related References

A. Standard Specifications

General Provisions 101 through 150.

B. Referenced Documents

AASHTO T 44

AASHTO T 48

AASHTO T 49

AASHTO T 51

AASHTO T 55

AASHTO T 78

AASHTO T 79

AASHTO T 201

821.2 Materials

821.2.01 Cutback Asphalt

A. Requirements

1. Type: Use an asphalt cement that is uniformly consistent and shows no separation or curbing.
2. Grade: Use various grades of cutback asphalts that meet the requirements shown in Table 1 and Table 2.

B. Fabrication

General Provisions 101 through 150.

C. Acceptance

Test as follows:

Test	Method
Water	AASHTO T 55
Flash point	AASHTO T 79 & T 48
Viscosity	AASHTO T 201
Distillation	AASHTO T 78
Ductility	AASHTO T 51
Solubility	AASHTO T 44
Penetration	AASHTO T 49

D. Materials Warranty

General Provisions 101 through 150.

Table 1—Properties of Medium Curing Cutback Asphalts

Requirements	Viscosity Grade									
	MC-30		MC-70		MC-250		MC-800		MC-3000	
	Min.	Max.	Min.	Max.	Min.	Max.	Min.	Max.	Min.	Max.
Water percent		0.2		0.2		0.2		0.2		0.2
Flash point, Cleveland Open Cup, ^{o}F (°C)	100 (38)		100 (38)		150 (65)		150 (65)		150 (65)	
Kinematic viscosity at 140 ^{o}F, centistokes (60 °C, mPa·s)	30	60	70	140	250	500	800	1600	3000	6000
Distillation test: Distillate, percentage by volume of total distillate to 680 ^{o}F (360 °C)										
to 437 ^{o}F (225 °C)		25		20		10				
to 500 ^{o}F (260 °C)	40	70	20	60	15	55		35		15
to 600 ^{o}F (315 °C)	75	93	65	90	60	87	45	80	15	75
Residue from distillation to 680 ^{o}F (360 °C) Volume percentages of sample by difference	50		55		67		75		80	
Tests on residue from distillation:										
Penetration, 100g, 5 sec., at 77 ^{o}F (25 °C), (dmm)	80	250	80	250	80	250	80	250	80	
Ductility at 77 ^{o}F (25 °C), at 5 cm per min., (cm)	100		100		100		100		100	250
Solubility in trichloroethylene, percent by weight	99.5		99.5		99.5		99.5		99.5	

Table 2—Properties of Rapid Curing Cutback Asphalts

Requirements	Viscosity Grade									
	RC-30		RC-70		RC-250		RC-800		RC-3000	
	Min.	Max.	Min.	Max.	Min.	Max.	Min.	Max.	Min.	Max.
Water percent		0.2		0.2		0.2		0.2		0.2
Flash point, Tagliabue Open Cup, ^{o}F (°C)					80 (25)		80 (25)		80 (25)	
Kinematic viscosity at 140 ^{o}F (60 °C, mPa·s)	30	60	70	140	250	500	800	1600	3000	6000
Distillation test: Distillate, percentage by volume of total distillate to 680 ^{o}F (360 °C)										
to 374 ^{o}F (190°C)	15		10							
to 437 ^{o}F(225 °C)	55		50		35		15			
to 500 ^{o}F (260 °C)	75		70		60		45		25	
to 600 ^{o}F (315 °C)	90		85		80		75		70	
Residue from distillation to 680 ^{o}F (360°C): Volume percentages of sample by difference	50		55		65		75		80	
Tests on residue from distillation:										
Penetration, 100g, 5 sec., at 77 ^{o}F (25 °C), (dmm)	60	120	60	120	60	120	60	120	60	120
Ductility at 77 ^{o}F (25 °C), at 5 cm per min., (cm)	100		100		100		100		100	250
Solubility in trichloroethylene, percent by weight	99.5		99.5		99.5		99.5		99.5	

Section 822 — Emulsified Asphalt

822.1 General Description

This section includes the requirements for homogenous emulsions of asphalt, water, and emulsifying agents.

822.1.01 Related References

A. Standard Specifications

Section 820–Asphalt Cement

B. Referenced Documents

AASHTO T 50

AASHTO T 59

822.2 Materials

822.2.01 Emulsified Asphalt

A. Requirements

1. Type
   Use materials not containing lumps and not showing separation during handling or storage of up to 30 days.
2. Grade
   Use the various grades of emulsified asphalts meeting or exceeding the requirements in Table 1.

Table 1—Requirements for Emulsified Asphalt

Type	**Rapid Setting**		**Slow Setting**						**Prime**	
Grade	**RS-2h Min. Max.**		**SS-1h Min. Max.**		**SS-1 Min. Max.**		**NTSS-1HM Min. Max.**		**EAP-1 Min. Max.**	
Tests on Emulsion: Viscosity Saybolt Furol at 77 °F (25 °C), (Sec.)			20	100	20	100	20	100	15	100
Viscosity Saybolt Furol at 122 °F (50 °C), (Sec.)	75	400								
(a) Settlement 5 Days, (Percent)		5		5		5		5		5
(b) Storage Stability Test 1 Day, (Percent)		1		1		1		1		1
(c) Demulsibility, 35 ml, 0.02N. $CaCl_2$, (Percent)	60									
(d) Cement Mixing Test, (Percent)				2.0		2.0				
Sieve Test, (Percent)		0.10		0.10		0.10		0.30		0.10
Oil Distillate by Volume (Percent)								1	5	12
Residue by Distillation (Percent AC)	63		57		57		50		50	
Tests on Residue from Distillation Test: Penetration 77 °F (25 °C) 100 gm/5 Sec. (dmm)	80	140	40	110	100	200		20		
Ductility at 77 °F (25 °C) 5 cm/min. (cm)	40		40		40					
Solubility in Trichloroethylene, (Percent)	97.5		97.5		97.5		97.5		97.5	
Float at 140 °F (60 °C), (Sec.)									20	
Softening Point, °C							65			
Original DSR @ 86°C G*/Sinδ, 10 rad/s, kPa							1.0			

(a) The test requirement for settlement may be waived when the emulsified asphalt is used in less than five (5) days; or the Engineer may require that the settlement test be run from the time the sample is received until it is used, if the elapsed time is less than five (5) days, if there is an issue of quality.

(b) The 24-hour (1 day) storage stability test may be used but does not predict that the 5 day settlement test will pass.

(c) Ensure the demulsibility test is made within 30 days from date of shipment.

(d) Ensure the cement mixing test will be applicable only if material is used in Asphalt Slurry Seal.

(e) Anionic emulsified asphalt is not compatible with cationic emulsions (CRS, CMS, CSS, CQS etc.). Ensure all equipment is thouroughly cleaned if cationic emulsion was previously present.

B. Fabrication

General Provisions 101 through 150.

C. Acceptance

Test as follows:

Test	Method
Testing emulsified asphalts	AASHTO T 59
Float test	AASHTO T 50

D. Materials Warranty

General Provisions 101 through 150.

Section 823—Cutback Asphalt Emulsion

823.1 General Description

This section includes the requirements for cutback asphalt emulsions.

823.1.01 Related References

A. Standard Specifications

Section 820–Asphalt Cement

B. Referenced Documents

AASHTO:

T 44

T 49

T 51

T 55

T 72

T 111

GDT 11

823.2 Materials

823.2.01 Cutback Emulsion

A. Requirements

Use the various grades of cutback asphalt emulsions that meet the requirements shown in Table 1.

Table 1—Properties of Cutback Asphalt Emulsions

Requirements	Grade			
	CBAE-2		CBAE-3	
	Min.	Max.	Min.	Max.
Viscosity, Furol at 140° F (60 °C), in seconds	100	350	400	700
Distillation:				
Residue (asphalt cement) percent by weight	67		72	
Water content percent by weight	4	12	4	12
Naphtha content (by difference) percent by weight	12	25	10	20
Tests on residue from distillation:				
Penetration at 77 °F (25 °C), 100 g, 5 seconds	60	150	60	150
Ductility at 77° F (25 °C), 5 cm per min., (cm)	100		100	
Solubility in trichloroethylene, percent by weight	99		99	
Ash, percent by weight		1.0		1.0

B. Fabrication

1. Prepare the cutback asphalt emulsions by compounding a suitable volatile naphtha, emulsifying agent, and water with asphalt cement.
2. Mechanically invert 100 percent of the cutback emulsions before shipping.

C. Acceptance

Test as follows:

Test	Method
Viscosity	AASHTO T 72
Distillation	GDT 11
Water	AASHTO T 55
Penetration	AASHTO T 49
Ductility	AASHTO T 51
Solubility	AASHTO T 44
Ash	AASHTO T 111

D. Materials Warranty

General Provisions 101 through 150.

Section 824—Cationic Asphalt Emulsion

824.1 General Description

This section includes the requirements for cationic asphalt emulsions.

824.1.01 Related References

A. Standard Specifications

General Provisions 101 through 150.

B. Referenced Documents

AASHTO T 49

AASHTO T 51

AASHTO T 53

AASHTO T 59

AASHTO T 72

AASHTO T 301

AASHTO T 302

ASTM D 5546 - 01

QPL 65

GDT 44

GDT 91

GDT 135

824.2 Materials

824.2.01 Cationic Asphalt Emulsion

A. Requirements

1. Use a homogenous emulsion. After thorough mixing, the emulsion cannot show signs of separation within 30 days.
2. Use cationic emulsion grades that meet the requirements in Table 1 (metric).

B. Fabrication

General Provisions 101 through 150.

C. Acceptance

Test as follows:

Test	Method
Testing emulsified asphalts (with the following exception):	AASHTO T 59
Frictional value	GDT 44

D. Materials Warranty

General Provisions 101 through 150.

Table 1—Requirements for Cationic Emulsified Asphalt (Notes)

1. The Engineer may waive the settlement test requirement if the emulsified asphalt is used in less than 5 days. However, the Department may still require that the settlement test be run from the time the sample is received until it is used.
2. The 24-hour storage stability test may be used. However, this test does not predict whether the 5-day settlement test will pass.
3. Perform the demulsibility test within 30 days from date of shipment.
4. The cement mixing test applies only if material is used in Asphalt Slurry Seal.
5. Slurry Seal containing CQS-1h must set sufficiently within 2 hours to allow traffic to resume.
6. In the Laboratory, Slurry Seal containing CQS-1h shall not set while being mixed according to GDT 91 for a minimum of 90 seconds.
7. Use ECR-1 in cold mix recycling of reclaimed pavements.

Table 1—Requirements for Cationic Emulsified Asphalt

Type	Rapid Setting				Medium Setting		Slow Setting		Cationic Quick Set			
Tests	CRS-2h		CRS-3		CMS-2		CSS-1h		CQS-1h (Note 5&6)		ECR-1 (Note 7)	
	Min.	Max.	Min.	Max.	Min.	Max.	Min.	Max.	Min.	Max.	Min.	Max.
Test on emulsions												
Vis. Saybolt Furol at 77 °F(25 °C), sec.							20	100	20	150	50	500
Vis. Saybolt Furol at 122 °F (50 °C), sec.	100	400	100	500	50	450						
Storage stability test, (Note 2) 24 hours, percent		1		1		1		1		1		1
Settlement (Note 1) 5 days, percent		5		5		5		5		5		5
Demulsibility (Note 3) 35 ml, 0.8% dioctyl sodium sulfosuccinate, percent	40		40									
Coating Ability and Water Resistance:												
Coating, dry aggregate					Good							
Coating, after spraying					Fair							
Coating, wet aggregate					Fair						Good	
Coating, after spraying					Fair							
Particle charge test	Positive		Positive		Positive		Positive		Positive			
Sieve test, percent		0.10		0.10		0.10		0.10		0.10		0.10
Cement mixing test, percent (Note 4)								2.0				
Oil distillate by volume of emulsion, percent		3		3	4	12					0	6
Residue, percent	65		65		65		65		65		60	
Test on Residue from Distillation Test: Penetration, 77 °F (25 °C), 100 g, 5 sec., (dmm)	80	140	60	110	100	250	40	110	60	110	125	225
Ductility, 77 °F (25 °C), 5 cm/min., (cm)	40		40		40		40		40		40	
Solubility in trichloroethylene, per cent	97.5		97.5		97.5		97.5		97.5		97.5	

824.2.02 Latex-Modified Cationic Asphalt Emulsion

A. Requirements

1. Latex Rubber Additive (LRA)

   Ensure the LRA is a natural latex or an unvulcanized styrene-butadine rubber in an emulsified latex form.

   Ensure that the LRA comes from an approved source listed in the Department's current QPL 65 for use in cationic asphalt emulsion.

2. Latex-Modified Cationic Asphalt Emulsion
   a. Use PG58-22 as the base asphalt.
   b. Add the LRA in the necessary proportions to result in a minimum of 3% polymer by weight of the asphalt residue.
   c. Co-mill the LRA and asphalt cement while manufacturing the emulsified asphalt to produce a homogeneous mixture.
   d. Ensure the latex-modified cationic asphalt emulsion, when undisturbed for 24 hours, shows no separation of emulsion and LRA and no color striations, but has a uniform color throughout.
   e. Use a latex-modified cationic asphalt emulsion that meets the requirements in Table 2.

Table 2 – Requirements for Latex-Modified Cationic Asphalt Emulsion

Type	Rapid Setting	
Tests	CRS-2L	
Tests on Emulsion	**Min**	**Max**
Viscosity, Saybolt Furol @ 122 °F (50 °C), sec.	100	400
Storage stability, 24 hours, percent		1
Settlement, 5 days, percent		5
Demulsibility, 35 ml, 0.8% dioctyl sodium sulfosuccinate, percent	40	
Particle charge test	Positive	
Sieve test, percent		0.10
Residue by distillation, percent [1]	65	
Tests on Emulsion Residue	**Min**	**Max**
Penetration @ 77 °F (25 °C), 100g, 5 sec., (dmm)	70	150
Ductility, @ 77 °F (25 °C), 5 cm/min., (cm)	100	
Elastic recovery @ 50°F (10 °C), percent [2]	55	
Ring & ball softening point, °F	125	
Solubility in toluene by centrifuge, percent	97.5	
Polymer solids content, percent	3.0	

1. AASHTO T-59 modified to include a maximum temperature of 400°F ± 10°F (204°C ± 5°C) to be held for a period of 15 minutes.
2. GDT-135, Residue by evaporation.

B. Fabrication

General Provisions 101 through 150.

C. Acceptance

Test as follows:

Test	Method
Penetration of bituminous materials	AASHTO T 49
Ductility	AASHTO T 51
Softening point of bitumen	AASHTO T 53
Testing emulsified asphalts	AASHTO T 59
Viscosity	AASHTO T 72
Elastic recovery	AASHTO T 301
Polymer content of polymer-modified emulsions	AASHTO T 302
Solubility of asphalt binders in toluene by centrifuge	ASTM D 5546 – 01
Residue by evaporation of latex-modified asphalt emulsions	GDT-135

D. Materials Warranty

General Provisions 101 through 150.

Section 825—Asphalt Plank

825.1 General Description

This section includes the requirements for pre-molded asphalt plank.

825.1.01 Related References

A. Standard Specifications

General Provisions 101 through 150.

B. Referenced Documents

AASHTO M 46

825.2 Materials

825.2.01 Premolded Asphalt Plank

A. Requirements

Use premolded asphalt plank that meets the AASHTO M 46 requirements.

B. Fabrication

General Provisions 101 through 150.

C. Acceptance

General Provisions 101 through 150.

D. Materials Warranty

General Provisions 101 through 150.

Section 826—Dampproofing or Waterproofing Material

826.1 General Description

This section includes the requirements for material used as a mopping coat in dampproofing or as mopping cement for a waterproof membrane system.

826.1.01 Related References

A. Standard Specifications

General Provisions 101 through 150.

B. Referenced Documents

AASHTO M 118

AASHTO M 121

826.2 Materials

826.2.01 Bituminous Material for Dampproofing or Waterproofing

A. Requirements

Use a bituminous material that contains a primer coat and a sealer or mopping coat.

1. Primer

   Use a primer coat that meets the requirements of AASHTO M 121.

2. Sealer or Mopping Coat

   Use a coal-tar pitch that meets the requirements of AASHTO M 118.

3. Coal-Tar Pitch Types

   Unless otherwise specified, use pitch Type I or Type II, as defined below, only when required by the Contract. Use Type I on vertical surfaces and Type II on flat surfaces.

   a. Type I Pitch

      A mopping coat for built-up roofs surfaced with slag or gravel. If the roof has nails, use the coat on inclines not exceeding 3 in/ft (75 mm/300 mm). If the roof does not have nails, use the coat on inclines not exceeding 1 in/ft (25 mm/300 mm).

      A mopping coat for dampproofing or a plying cement for building a membrane system of waterproofing above ground level. Do not use this material if it will be exposed to temperatures over 125 °F (52 °C).

NOTE: This type of coal-tar pitch is suitable on railroad bridges, tanks, retaining walls, culverts, dams, conduit, etc.

   b. Type II Pitch

      A mopping coat for dampproofing or a plying cement in building a membrane system of waterproofing below ground level. Use this material for roofs exposed to moderate temperatures during installation and service.

B. Fabrication

General Provisions 101 through 150.

C. Acceptance

See the requirements in AASHTO M 118 and M 121.

D. Materials Warranty

General Provisions 101 through 150.

Section 828—Hot Mix Asphaltic Concrete Mixtures

828.1 General Description

This specification includes the requirements for hot mix asphaltic concrete mixtures, including:

- Open-graded surface mixtures (OGFC and PEM)
- Stone Matrix Asphalt mixtures (SMA)
- Superpave mixtures
- Fine-graded (4.75 mm) mixtures

828.1.01 Definitions

The Nominal Maximum Sieve Size is one standard sieve size larger than the first sieve to retain more than ten percent of the aggregate, per AASHTO R35. Mixture types in this section are identified according to Nominal Maximum Sieve Size.

828.1.02 Related References

A. Standard Specifications

Section 400-Hot Mix Asphaltic Concrete Construction

Section 800–Coarse Aggregate

Section 802–Aggregates for Asphaltic Concrete

Section 819–Fiber Stabilizing Additives

Section 820–Asphalt Cement

Section 831–Admixtures

Section 882–Lime

Section 883–Mineral Filler

B. Referenced Documents

AASHTO R30

AASHTO R35

AASHTO T-321

AASHTO T 112

AASHTO T 209

AASHTO T 305

AASHTO T 312

AASHTO T-245

AASHTO T-340

SOP-36

SOP-2

GDT 1

GDT 56

GDT 63

GDT 66

GDT 114

GDT 115

GDT 123

QPL 1

QPL 2

QPL 7

QPL 26

QPL 41

QPL 77

QPL 81

828.2 Materials

A. Requirements

Use approved hot mix asphalt concrete mixtures that meet the following requirements:

1. Produce each asphalt mixture according to a Department approved Job Mix Formula and Asphalt Mix Design, see Subsection 400.1 for submittal and approval of Job Mix Formulas.
2. Ensure individual acceptance test results meet the Mixture Control Tolerances specified in the appropriate table below, Subsections 828.2.01 through 828.2.04.
3. Ensure the Engineer approves all materials used to prepare and place the mixtures before incorporating them into the Work. Use only the ingredients listed in the approved Asphalt Mix Design and Job Mix Formula. For virgin aggregates use sources meeting the requirements of Section 802 and are listed in QPL 1 or QPL 2; for mixes in which local sand is permitted, use the approved sand source identified in the mix design. For mixtures containing Reclaimed Asphalt Pavement (RAP), use only RAP from the approved stockpile identified in the mix design. Use asphalt cement meeting the requirements of Section 820, from a source listed in QPL 7.
4. Obtain approved SMA mix designs, Superpave mix designs and 4.75 mm mix designs from a mix design laboratory certified by the Department. Obtain approved mix designs for types PEM and OGFC mixtures from the Department's Office of Materials and Research, which produces and furnishes these mix designs.
5. Ensure all SMA mix designs are designed in accordance with GDT-123 (“Determining the Design Proportions of Stone Matrix Asphalt Mixtures”). SMA mix designs shall be verified and approved by the Department prior to use. Ensure that Superpave and 4.75 mm mix designs are designed in accordance with SOP-2 ("Control of Superpave Bituminous Mixture Designs") and are approved by the Department as provided therein. Ensure these mixes are designed by a laboratory and technician certified in accordance with SOP-36, ("Certification of Laboratories and Personnel for Design of SMA and Superpave Asphalt Mixtures").
6. Use only mixtures composed of the aggregate groups and blends indicated in the Proposal and Plans by their pay item designations, defined as follows:

Pay Item Designation	Allowable Aggregate Groups
Group I or II	Group I, Group II, or Blend I
Group II only	Group II only
Blend I	Either 100% Group II material or a blend of Group I and Group II. Do not use Group I material for more than 60%, by weight, of the total aggregate nor more than 50%, by weight, of the coarse aggregate fraction.

7. For patching or leveling use Group I, Group II, or Blend I. Mix types for patching and leveling are specified in Subsection 400.3.03.B.
8. Include lime (hydrated lime) from an approved source and meeting the requirements of Section 882 in all paving courses except as otherwise provided in the Contract. For a list of approved sources of lime, see QPL 41.
   a. Add lime to each mixture at the rate prescribed in the approved mix design.
   b. Ensure mix designs using only virgin aggregate include lime at a minimum rate of 1.00 % of the total dry aggregate weight. Ensure mix designs using RAP include lime at a minimum rate equal to 1.00 % of the virgin aggregate fraction plus 0.50 % of the aggregate in the RAP fraction.
   c. Add more lime or add lime plus an approved Heat-Stable Anti-Stripping Additive that meets the requirements of Section 831, if necessary to meet requirements for mixture properties, and pursuant to an approved mix design. However, the Department will not make additional payment for these materials. For a list of sources of Heat-Stable Anti-Stripping Additives, see QPL 26.
   d. Where specifically allowed in the contract on LARP, airport, and parking lot projects, an approved Heat-Stable Anti-Stripping Additive that meets the requirements of Section 831 may be substituted for hydrated lime. Ensure the mix gradation is adjusted to replace the lime with an equivalent volume of fines passing the 0.075 mm sieve. Add Heat-Stable Anti-stripping Additive at a minimum rate of 0.5 percent of the asphalt cement portion.
9. Use performance grade PG 64-22 or PG 67-22 asphalt cement in all mix designs and mixtures except as follows:
   a. The State Bituminous Construction Engineer will determine the performance grade to be used, based on Table 2 – Binders Selection Guideline for Reclaimed Asphalt Pavement (RAP) Mixtures, AASHTO M323 and laboratory testing results as required in Section 828.2.B for mixtures containing ≥ 25% equivalent binder replacement for RAP/RAS mixtures.
   b. Use only grade PG 76-22, excluding shoulder construction in the following mixes: all SMA, 12.5 mm PEM, 9.5 mm and 12.5 mm OGFC, 12.5 mm Superpave, on projects with ADT greater than 25,000; and in all mixtures for which polymer-modified asphalt is specified in the pay item.
10. Use of local sand is restricted as follows:
   a. Do not place mixtures containing local sand on the traveled way of the mainline or ramps of the Interstate System. Mixtures with local sand may be used for shoulder construction on these facilities.
   b. Ensure local sand will not constitute more than 20 % of the total aggregate weight of any mix design or production mix.
   c. Subject to the above limits, 19 mm, 12.5 mm, and 9.5 mm Superpave mix designs and 4.75 mm mix designs containing local sand may be used on projects with a current ADT not exceeding 2,000.
   d. 25 mm Superpave mix designs containing not more than 20 % local sand may be used on all facilities except the main line and ramps of the Interstate System.
   e. Obtain local sand for use in asphalt mixtures from a source approved by the Department.
   f. Approval of local sand sources: The Department will sample, test, and approve sources of local sand. Local sand shall not contain more than 7.0 % clay by weight and shall be free of foreign substances, roots, twigs, and other organic matter. Ensure sand is free of clay lumps, as determined by AASHTO T 112, and shall have a sand equivalent value exceeding 25%, as determined by GDT 63.

B. Fabrication

1. Design procedures: For all Superpave and 4.75 mm mixes, ensure conformance with the Superpave System for Volumetric Design (AASHTO T 312 and AASHTO R30), as adapted in SOP-2. Ensure Superpave mixes are designed at a design gyration number (Ndes) of 65 gyrations and initial gyration number (Nini) of 6 gyrations. For 4.75 mm mixes, (Ndes) shall be 50 gyrations, and (Nini) shall be 6 gyrations. Open-graded mix designs will be designed in accordance with GDT 114 by the Department. In all cases, the procedure for measuring Maximum Specific Gravity (Gmm) shall be AASHTO T 209. In addition to gradation and volumetric analysis, mix designs shall include the following performance tests, as applicable.
2. Performance Test:
   a. Permeability test: Superpave and Stone Matrix mix designs shall include testing according to GDT -1 Measurement of Water Permeability of Compacted Asphalt Paving Mixtures. Specimen air voids for this test shall be 6.0 ±1.0 %. The average permeability of three specimens may not exceed 3.60 ft per day (125×10^{-5}cm per sec).
   b. Moisture susceptibility test: Mix designs of all types except open-graded surface mixes shall include testing for moisture susceptibility according to GDT 66. Specimen air voids for this test shall be 7.0 ±1.0% for all mixes excluding Stone Matrix mixes. Specimen air voids for this test shall be 6.0 ± 1.0% for Stone Matrix mixes. The minimum tensile splitting ratio is 0.80, except that a tensile splitting ratio of no less than 0.70 may be acceptable if all individual strength values exceed 100 psi (690 kPa). Average splitting strength of the three conditioned and three controlled samples shall be not less than 60 psi (415 kPa) for either group. Retention of coating as determined by GDT 56 shall be not less than 95%.
   c. Rutting susceptibility test: Mix designs of all types except Open-graded Surface Mixes (OGFC and PEM), and mixtures designed exclusively for trench widening shall include testing according to GDT 115 or AASHTO T-340. Design limits for this test are as follows: Specimen air voids for this test shall be 5.0 ± 1.0% for all mix types. Testing temperature shall be 64°C (147°F) for all mix types except 19 mm and 25 mm Superpave mixes, which shall be tested at 49°C (120°F). Maximum deformation shall be 5.0 mm for all mixes except 4.75 mm mix, 9.5 mm Type I and 9.5 mm Type II Superpave mixes. Maximum deformation for the 9.5 mm Type II Superpave mix shall be 6.0 mm at 64°C (147°F) and 8.0 mm at 64°C (147°F) for the 4.75 mm and 9.5 mm Type I Superpave mix.
   d. Fatigue testing: The Department may verify dense-graded mix designs by fatigue testing according to AASHTO T 321 or other procedure approved by the Department.
   e. Hamburg Wheel-Tracking Test: The Department may verify Warm Mix Asphalt dense-graded mix designs or mix designs incorporating Polyphosphoric Acid (PPA) modified binders by Hamburg Wheel-tracking testing according to AASHTO T 324.

C. Acceptance

See Subsection 106.03 and Section 400. Ensure individual test results meet the Mixture Control Tolerances listed in Subsections 828.2, 828.2.01 ,828.2.02, 828.2.03, or 828.2.04, whichever applies with the following exception. Field verification results for rutting susceptibility tests performed on laboratory fabricated and/or roadway cores obtained from asphalt plant produced mixtures shall meet specified requirements with a tolerance of +2.0 mm.

D. Materials Warranty

See General Provisions 101 through 150.

828.2.01 Open-Graded Surface Mixtures

A. Requirements

Produce the mixture according to an approved mix design and Job Mix Formula. Ensure Open-Graded Surface Mixtures meet the following mixture control tolerances and mix design criteria:

Sieve Size	Mixture Control Tolerance, %	Design Gradation Limits, % Passing		
		9.5 mm OGFC	12.5 mm OGFC	12.5 mm PEM
3/4 in (19 mm) sieve	±0.0		100*	100*
1/2 in (12.5 mm) sieve	±6.1	100*	85-100	80-100
3/8 in (9.5 mm) sieve	±5.6	85-100	55-75	35-60
No. 4 (4.75 mm) sieve	±5.7	20-40	15-25	10-25
No. 8 (2.36 mm) sieve	±4.6	5-10	5-10	5-10
No. 200 (75 µm) sieve	±2.0	2-4	2-4	1-4
Range for % AC	±0.4	6.0-7.25	5.75-7.25	5.5-7.0
Class of stone (Section 800)		"A" only	"A" only	"A" only
Drain-down (AASHTO T305), %		<0.3	<0.3	<0.3

* Mixture control tolerance is not applicable to this sieve for this mix.

1. In 12.5 mm and 9.5 mm OGFC and 12.5 mm PEM mixes, use only PG 76-22 asphalt cement (specified in Section 820).
2. All OGFC and PEM mixes shall include a stabilizing fiber of the type (cellulose or mineral) specified in the mix design and meeting the requirements of Section 819. The dosage rate shall be as specified in the mix design and shall be sufficient to prevent drain-down exceeding the above tolerance.

B. Fabrication

See Section 400.

828.2.02 Stone Matrix Asphalt Mixtures

A. Requirements

Produce the mixture according to an approved mix design and Job Mix Formula. Ensure that Stone Matrix Asphalt mixtures meet the following mixture control tolerances and mix design criteria:

Sieve Size	Mixture Control Tolerance	Design Gradation Limits, Percent Passing		
		9.5 mm SMA	12.5 mm SMA	19 mm SMA
1- in (25 mm) sieve	±0.0			100*
3/4 in (19 mm) sieve	±7.0	100*	100*	90-100
1/2 in (12.5 mm) sieve	±6.1	98-100**	85-100	44-70
3/8 in (9.5 mm) sieve	±5.6	70-100	50-75	25-60
No. 4 (4.75 mm) sieve	±5.7	28-50	20-28	20-28
No. 8 (2.36) mm sieve	±4.6	15-30	16-24	15-22
No. 50 (300 µm) sieve	±3.8	10-17	10-20	10-20
No. 200 (75 µm) sieve	±2.0	8-13	8-12	8-12
Range for % AC	±0.4	6.0-7.5	5.8-7.5	5.5-7.5

(Note 1)	(Note 2)			
Design optimum air voids (%)		3.5 ±0.5	3.5 ±0.5	3.5 ±0.5
% aggregate voids filled with AC (VFA)		70-90	70-90	70-90
Tensile splitting ratio after freeze-thaw cycle GDT-66		80%	80%	80%
Drain-down (AASHTO T305), %		<0.3	<0.3	<0.3

*Mixture control tolerance is not applicable to this sieve for this mix.

**Mixture control tolerance shall be ± 2.0% for this sieve for 9.5 mm SMA mixes placed at spread rates greater than 135 lb/yd2. For 9.5 mm SMA mixes placed at spread rates of 135 lb/yd2 or less, 100 % passing is required on this sieve.

Note 1: Range for % AC is Original Optimum AC (OOAC) at 35 gyrations (Gyratory compactor) or 50 blows (Marshall compactor) prior to Corrected Optimum AC (COAC) calculation detailed in GDT 123 (Appendix A)

Note 2: Quality Acceptance Test Results for AC content that deviate > ± 0.3% from the approved Job Mix Formula (JMF) consistently over three lots may subject the mix to a revised AC content on project JMF at the discretion of the Office of Materials and Research based on statiscal trend.

1. Ensure SMA mixtures are compacted at 35 gyrations with the Superpave Gyratory compactor or 50 blows with the Marshall compactor.
2 Ensure SMA mixtures contain mineral filler and fiber stabilizing additives and meet the following requirements:
   a. Asphalt cement grade PG-76-22 (specified in Section 820) is required in all SMA mixtures.
   b. Aggregates for SMA meet the requirements of Subsection 802.2.02.A.3.
   c. Use the approved mineral filler specified in the mix design and meeting the requirements of Section 883 Approved sources of mineral filler are listed in QPL 81.

   Use the approved Fiber Stabilizing Additive of the type (cellulose or mineral) specified in the mix design and meeting the requirements of Section 819. Approved sources of Fiber Stabilizing Additive are listed in QPL 77. The dosage rate will be as specified in the mix design and sufficient to prevent drain-down exceeding the above tolerance.

B. Fabrication

See Section 400.

828.2.03 Superpave Asphalt Concrete Mixtures

A. Requirements for Superpave Mixtures (except Parking Lot Mixtures)

Produce the mixture according to an approved mix design and Job Mix Formula. Ensure Superpave Asphalt Concrete mixtures meet the following mixture control tolerances and mix design limits:

1. Gradation limits for Superpave mixtures are as follows:

Sieve Size	Mixture Control Tolerance	Design Gradation Limits, Percent Passing				
		9.5 mm Superpave Type I	9.5 mm Superpave Type II	12.5 mm Superpave (Note 1)	19 mm Superpave	25 mm Superpave
1½ in (37.5 mm) sieve						100*
1- in (25.0 mm)	± 8.0			100*	100*	90-100
3/4 in (19.0 mm) sieve	±8.0**	100*	100*	98-100****	90-100	55-89**
1/2 in (12.5 mm) sieve	±6.0***	98-100****	98-100****	90-100	60-89***	50-70
3/8 in (9.5 mm) sieve	±5.6	90-100	90-100	70-89	55-75	
No. 4 (4.75 mm) sieve	±5.6	65-85	55-75			
No. 8 (2.36 mm) sieve	±4.6	48-55	42-47	38-46	32-36	30-36
No. 200 (75 µm) sieve	±2.0	5.0-7.0	5.0-7.0	4.5-7.0	4.0-6.0	3.5-6.0
Range for % AC (Note 3)	± 0.4 (Note 2)	5.50-7.25	5.25-7.00	5.00-6.25	4.25-5.50	4.00-5.25

* Mixture control tolerance is not applicable to this sieve for this mix.

** Mixture control tolerance shall be ± 10.0% for this sieve for 25 mm Superpave.

***Mixture control tolerance shall be ± 8.0% for this sieve for 19 mm Superpave.

****Mixture control tolerance shall be ± 2.0% for this sieve for 12.5 mm and 9.5 mm mixes.

Note 1: Use PG 76-22 in 12.5 mm Superpave, excluding shoulder construction, on all projects with ADT greater than 25,000 as detailed in the Contract Pay Item.

Note 2: Quality Acceptance Test Results for AC content that deviating > ± 0.3 % from the approved Job Mix Formula (JMF) consistently over three Lots may subject the mix to a revised AC content on the project JMF at the discretion of the Office of Materials and Research based on statistical trend.

Note 3: Range for % AC is Original Optimum AC (OOAC) at 65 gyrations prior to the Corrected Optimum AC (COAC) calculation detailed in SOP 2 (Appendix D).

2. Volumetric limits are as follows:

Design Parameter	Mix Type	Limits
% of Max. Specific Gravity (Gmm) at design gyrations, (Ndes)	All	96%
% Gmm at the initial number of gyrations, Ni	All	91.5% maximum
% voids filled with asphalt (VFA) at Ndes	9.5 mm Type I	Min. 72; Max. 80
	9.5 Type II and 12.5 mm	Min. 72; Max. 76
	19 mm	Min. 71; Max 76
	25 mm	Min. 69; Max 76
Fines to effective asphalt binder ratio (F/Pbe)	9.5 mm Type I	0.6 to 1.4
	All other types	0.8 to 1.6
Minimum Film Thickness (microns)*	All	> 7.00
Minimum % Voids in Mineral Aggregate (VMA) Note: VMA shall be calculated using the effective specific gravity of the aggregate (Gse). See SOP-2SP.	25 mm	13.0
	19 mm	14.0
	12.5 mm	15.0
	9.5 Type I	16.0
	9.5 Type II	16.0

*Superpave Mixtures approved prior to January 31, 2012, may be adjusted to meet Minimum Film Thickness requirement by mixture adjustments made by the State Bituminous Construction Engineer.

B. Requirements for Superpave Parking Lot Mixes (NOT FOR STANDARD HIGHWAY/STREET PAVING)

1. Surface Layers for parking facilities:

Sieve Size	Mixture Control Tolerance	Design Gradation Limits, Percent Passing		
		4.75 mm Mix	9.5 mm Superpave Type I	9.5 mm Superpave Type II
1- in (25.0 mm) sieve	± 8.0			
3/4 in (19.0 mm) sieve	±8.0		100*	100*
1/2 in (12.5 mm) sieve	±6.0	100*	98-100****	98-100****
3/8 in (9.5 mm) sieve	±5.6	90-100	90-100	90-100
No. 4 (4.75 mm) sieve	±5.6	75-95	65-85	55-75
No. 8 (2.36 mm) sieve	±4.6	60-65	48-55	42-47
No. 50 (300 µm) sieve	+3.8	20-50		
No. 200 (75 µm) sieve	±2.0	4-12	5.0-7.0	5.0-7.0
Range for Total AC	+ 0.4	6.00 - 7.50	5.50 - 7.25	5.25 - 7.00

* Mixture control tolerance is not applicable to this sieve for this mix.

****Mixture control tolerance shall be ± 2.0% for this sieve for 12.5 mm and 9.5 mm mixes.

2. Subsurface Layers for parking facilities:

Sieve Size	Mixture Control Tolerance	Design Gradation Limits, Percent Passing		
		12.5 mm Superpave	19 mm Superpave	25 mm Superpave
				100*
1- in (25.0 mm) sieve	± 8.0	100*	100*	90-100
3/4 in (19.0 mm) sieve	±8.0**	98-100****	90-100	55-89**
1/2 in (12.5 mm) sieve	±6.0***	90-100	60-89***	50-70
3/8 in (9.5 mm) sieve	±5.6	70-89	55-75	
No. 8 (2.36 mm) sieve	±4.6	38-46	32-36	30-36
No. 200 (75 µm) sieve	±2.0	4.5-7.0	4.0-6.0	3.5-6.0
Range for Total AC	+ 0.4	5.00 - 6.25	4.25 - 5.50	4.00 - 5.25

*Mixture control tolerance is not applicable to this sieve for this mix.

**Mixture control tolerance shall be ±10.0% for this sieve for 25 mm Superpave mixes.

***Mixture control tolerance shall be ±8.0% for this sieve for 19 mm Superpave mixes.

****Mixture control tolerance shall be ±2.0% for this sieve for 12.5 mm and 9.5 mm Superpave mixes.

3. Volumetric limits for parking facilities are as follows:

Design Parameter	Mix Type	Limits
% of Max. Specific Gravity (Gmm) at design gyrations, Ndes)	All	96%
% Gmm at the initial number of gyrations, Ni	All	91.5 % maximum
% voids filled with asphalt (VFA) at Ndes	9.5 mm Type I	Min. 72; Max. 80
	9.5 Type II and 12.5 mm	Min. 72; Max. 78
	19 and 25 mm	Min. 71; Max 76
Fines to effective asphalt binder ration (F/Pbe)	9.5 mm Type I	0.6 to 1.4
	All other types	0.8 to 1.6
Minimum Film Thickness (microns)*	4.75 mm	> 6.00
	All other types	> 7.00
Minimum % Voids in Mineral Aggregate (VMA)	25 mm	13.0
	19 mm	14.0
Note: VMA shall be calculated using the effective specific gravity of the aggregate (Gse). See SOP-2	12.5 mm	15.0
	9.5 mm Types I, II	16.0

*Mixtures approved prior January 31, 2012, may be adjusted to meet Minimum Film Thickness requirement by mixture adjustments made by the State Bituminous Construction Engineer.

C. Fabrication

See Section 400.

828.2.04 Fine-Graded Mixtures

A. Requirements

Produce the mixture according to an approved mix design and Job Mix Formula. Ensure fine-graded mixtures meet the following mixture control tolerances and design limits:

ASPHALTIC CONCRETE - 4.75 mm Mix		
Sieve Size	**Mixture Control Tolerance**	**Design Gradation Limits, % passing**
1/2 in (12.5 mm) sieve*	±0.0	100*
3/8 in (9.5 mm) sieve	±5.6	90-100
No. 4 (4.75 mm) sieve	±5.7	75-95
No. 8 (2.36 mm) sieve	±4.6	60-65
No. 50 (300 μm) sieve	±3.8	20-50
No. 200 (75 μm) sieve	±2.0	4-12
Range for % AC	±0.4	6.00 – 7.50
Design optimum air voids (%)		4.0 – 7.0
% Aggregate voids filled with AC		60 - 80
Minimum Film Thickness (microns)**		> 6.00

* Mixture control tolerance is not applicable to this sieve for this mix.

** 4.75 mm Mixtures approved prior January 31, 2012, may be adjusted to meet Minimum Film Thickness requirement by mixture adjustments made by the State Bituminous Construction Engineer.

B. Fabrication

See Section 400.

C. Acceptance

See Subsection 106.3 and Section 400. Ensure individual test results meet the Mixture Control Tolerances listed in Subsections 828.2, 828.2.01, 828.2.02, 828.2.03, 828.2.04, whichever applies.

D. Materials Warranty

See General Provisions 101 through 150.

Section 830—Portland Cement

830.1 General Description

This section includes the requirements for Portland cement, including Portland blast-furnace slag cement and Portland-Pozzolan cement.

830.1.01 Related References

A. Standard Specifications

Section 831–Admixtures

B. Referenced Documents

AASHTO M 85

AASHTO M 240

QPL 3

830.2 Materials

830.2.01 Portland Cement

A. Requirements

Use only Portland cements that are listed in QPL 3.

1. Type

   Use Portland cement that meets the requirements in AASHTO M 85. Portland cement types include:

Use	High Early Strength Concrete	Remaining Portland Cement Concrete
*Portland cement	Types I or III	Types I or II

*Portland cement – a hydraulic cement produced by pulverizing clinker consisting essentially of hydraulic crystalline calcium silicates, and usually containing one or more of the following: water, calcium sulfate, up to 5% limestone, and processing additions.

2. Ensure that the Portland cement concrete meets the low alkali and the false set requirements of AASHTO M 85.
3. Do not use cement that is damaged, partially set, lumpy, or caked.
4. Mixing and Storing

   Do not mix or store different brands or types of cement in the same bin. Do not mix or store the same brand of cement from different mills in the same bin.

B. Fabrication

General Provisions 101 through 150.

C. Acceptance

See the requirements in AASHTO M 85.

D. Materials Warranty

General Provisions 101 through 150.

830.2.02 Portland Blast-Furnace Slag Cement

A. Requirements

Use Portland blast-furnace slag cement in cement stabilization that meets the requirements of AASHTO M 240, Type IS.

B. Fabrication

General Provisions 101 through 150.

C. Acceptance

See requirements of AASHTO M 240, Type IS.

D. Materials Warranty

General Provisions 101 through 150.

830.2.03 Portland-Pozzolan Cement

A. Requirements

Use Portland-Pozzolan cement that meets the requirements of AASHTO M 240, Type IP, with the following modifications:

1. Limit the fly ash content to a maximum of 25 percent by weight.
2. Limit the Pozzolan to fly ash that meets the requirements of Subsection 831.2.03.
3. If grinding fly ash with Portland cement clinker to produce Portland-Pozzolan cement, do the following:
   a. Exclude the fineness and the loss-on-ignition requirements of Subsection 831.2.03.
   b. Ensure that the final blend of Portland-Pozzolan cement meets AASHTO M 240, Type IP requirements.
4. Wherever the Standard Specifications allow or specify Portland cement that meets the requirements of Subsection 830.2.01, you may substitute Portland-Pozzolan cement that meets the requirements of this Subsection.
5. If the substitute cement results in a higher cement factor than required for Type I cement, the cost of the additional cement will be borne by the Contractor.

B. Fabrication

General Provisions 101 through 150.

C. Acceptance

See the requirements of AASHTO M 240, Type IP.

D. Materials Warranty

General Provisions 101 through 150.

Section 831—Admixtures

831.1 General Description

This section includes the requirements for the following Portland cement concrete and bituminous concrete admixtures:

- Air-entraining admixtures
- Chemical admixtures
- Fly ash, raw or calcined natural pozzolan, slag, and microsilica
- Heat-stable, anti-stripping additive
- Silicone fluid

831.1.01 Related References

A. Standard Specifications

Section 500—Concrete Structures

Section 828—Hot Mix Asphaltic Concrete Mixtures

Section 830—Portland Cement

B. Referenced Documents

AASHTO M 154

AASHTO M 194

AASHTO M 295

AASHTO M 302

AASHTO M 307

Federal Specification VV-D-1078B

GDT 56

GDT 66

QPL 13

QPL 14

QPL 26

QPL 30

QPL 40

831.2 Materials

Use only admixtures that are listed on the specific Georgia Department of Transportation Qualified Products List (QPL). For a list of Heat Stable Anti-Stripping Additives sources, see QPL 26.

831.2.01 Air-Entraining Admixtures

A. Requirements

1. Use air-entraining admixtures listed in QPL 13.
2. Use air-entraining admixture materials meeting AASHTO M 154, Performance and Uniformity requirements.
3. Test compression and flexure strengths at 7 and 28 days.
4. Use air-entraining admixtures evaluated by the National Transportation Product Evaluation Program (NTPEP) test facility or other approved test facility.

B. Fabrication

General Provisions 101 through 150.

C. Acceptance

See requirements of AASHTO M 154.

D. Material Warranty

General Provisions 101 through 150.

831.2.02 Chemical Admixtures for Concrete

A. Requirements

1. Use chemical admixtures listed in QPL 14.
2. Use chemical admixture materials meeting AASHTO M 194 Physical requirements and Uniformity and Equivalence requirements for Types A, B, C, D, E, F, or G, unless otherwise specified.
   a. Waive the length change requirements.
   b. Ensure that the admixtures contain no more than 0.8 percent chloride, calculated as calcium chloride.
   c. Ensure that the air content does not exceed 4 percent when prepared in a standard batch without an added air-entraining agent.
3. Use chemical admixtures evaluated by the National Transportation Product Evaluation Program (NTPEP) test facility or other approved test facility.

B. Fabrication

General Provisions 101 through 150.

C. Acceptance

See the requirements of AASHTO M 194 for chemical admixtures.

D. Material Warranty

General Provisions 101 through 150.

831.2.03 Fly Ash, Raw or Calcined Natural Pozzolan, Slag, and Microsilica

A. Requirements

1. Fly Ash

   Fly ash is finely divided residue from the combustion of ground or powdered coal that is transported from the boiler by flue gases.

   Use fly ash that meets the requirements of AASHTO M 295, Class F or C and that are listed in QPL 30.
2. Raw or Calcined Natural Pozzolan

   This is a siliceous or siliceous and aluminous material.

   Use Pozzolan that meets the requirements of AASHTO M 295, Class N and that are listed in QPL 30.
3. Granulated Iron Blast-Furnace Slag

   This is a glassy granular material formed when molten blast-furnace slag is rapidly chilled and then finely ground.

   Use slag that meets the requirements of AASHTO M 302, Grade 100 or 120 and that are listed in QPL 30.
4. Microsilica (Silica Fume)

   This is an amorphous material with high silica content and purity, made as a by-product of high purity quartz that is reduced with other ingredients in an electric-arc furnace.

   Use microsilica that meets the requirements of AASHTO M 307.

B. Fabrication

General Provisions 101 through 150.

C. Acceptance

The Engineer will select the laboratory tests for acceptance and project control.

D. Material Warranty

General Provisions 101 through 150.

831.2.04 Heat-Stable Anti-Stripping Additive

A. Requirements

1. Use heat-stable, anti-stripping additives listed in QPL 26.
2. Submit samples of the proposed heat-stable, anti-stripping additive, asphalt cement, and aggregates to the laboratory for approval before use.
3. Ensure that materials meet the requirements of Section 828 for retained coating and tensile strength ratio when tested with GDT 56 and GDT 66, respectively.
4. Do not use an additive that contains harmful ingredients or adversely alters the specified characteristics of the bituminous material when added in the recommended proportions.

B. Fabrication

General Provisions 101 through 150.

C. Acceptance

Test as follows:

Test	Method
Retained coating	GDT 56
Tensile strength ratio	GDT 66

D. Material Warranty

General Provisions 101 through 150.

831.2.05 Silicone Fluid

A. Requirements

Use silicone fluid that meets Federal Specification VV-D-1078B, Viscosity Grade 1,000. For a list of sources, see QPL 40.

B. Fabrication

General Provisions 101 through 150.

C. Acceptance

See Federal Specification VV-D-1078B.

D. Material Warranty

General Provisions 101 through 150.

Section 832—Curing Agents

832.1 General Description

This section includes the requirements for the following curing agents:

- Burlap or cotton fabric
- Sheet materials
- Membrane curing compound

832.1.01 Related References

A. Standard Specifications

General Provisions 101 through 150.

B. Referenced Documents

AASHTO M 148

AASHTO M 171

QPL 16

832.2 Materials

832.2.01 Burlap or Cotton Fabric

A. Requirements

1. Use burlap or cotton fabric meeting these requirements:
   - Burlap that is 10 to 18 oz./yd² (340 to 610 g/m²) or two layers of 6 or 7 oz/yd² (200 or 235 g/m²)
   - Cotton fabric that is white, loosely woven, and not less than 7 oz/yd² (235 g/m²)
   - Strips of burlap or cotton fabric that are between 3 and 6 ft (0.9 and 1.8 m) wide and 3 ft (1 m) longer than the width of the slab to be covered
2. Use burlap and cotton fabrics that do not contain starch or other material that could stain the concrete. If the fabric is new, soak and dry it before use.

B. Fabrication

General Provisions 101 through 150.

C. Acceptance

General Provisions 101 through 150.

D. Materials Warranty

General Provisions 101 through 150.

832.2.02 Sheet Materials

A. Requirements

1. Use sheet material for curing concrete that meets AASHTO M 171 requirements.
2. Use waterproof paper that is white.
3. Use polyethylene film that is white opaque.

4. For curing bridge decks, use sheet material that is either a white burlap polyethylene sheet or a white co-polymer material coated over a layer of absorbent, non-woven, synthetic fabric.

   Use sheet material that meets Specification reflection and moisture retention requirements.

B. Fabrication

General Provisions 101 through 150.

C. Acceptance

See the requirements under AASHTO M 171.

D. Materials Warranty

General Provisions 101 through 150.

832.2.03 Membrane Curing Compound

A. Requirements

1. Use membrane curing compounds listed in QPL 16
2. Use liquid membrane-forming compounds meeting AASHTO M 148 requirements.
3. Use membrane curing compounds evaluated by the National Transportation Product Evaluation Program (NTPEP) test facility or other approved test facility.

B. Fabrication

General Provisions 101 through 150.

C. Acceptance

See the requirements under AASHTO M 148.

D. Materials Warranty

General Provisions 101 through 150.

Section 833—Joint Fillers and Sealers

833.1 General Description

This section includes the requirements for joint fillers and sealers, as follows:

Joint Sealers	Joint Fillers
• Hot-poured • Preformed elastic • Silicone sealant and bond breaker For bridge decks: • Neoprene • Ethylene propylene diene monomer For inductive loops: • Polyurethane sealant	• Preformed • Preformed foam • Water-blown urethane • Elastomeric polymer type joint compound

833.1.01 Related References

A. Standard Specifications

Section 106–Control of Materials

Section 461–Sealing Roadway and Bridge Joints and Cracks

B. Referenced Documents

AASHTO		ASTM		
M 153	C 679	D 471	D 822	D 1622
M 213	C 793	D 573	D 1056	D 1623
M 220	C 1016	D 746	D 1171	D 1752
T 42	D 412	D 792	D 1149	D 2240

GDT 15

GDT 47

GDT 62

GDT 70

GDT 106

QPL 20

QPL 66

QPL 75

833.2 Materials

833.2.01 Preformed Joint Filler

A. Requirements

General Provisions 101 through 150.

B. Fabrication

General Provisions 101 through 150.

C. Acceptance

Use preformed joint filler that meets either AASHTO M 153 or AASHTO M 213 requirements. For a list of sources, see QPL 20.

Ensure that cellulose fiber types meet the requirements of AASHTO M 213 (except for the asphalt content) and contain minimums of 0.2 percent zinc borate as a preservative and 1.5 percent waterproofing wax.

D. Materials Warranty

General Provisions 101 through 150.

833.2.02 Hot-Poured Joint Sealers

A. Requirements

1. Type

Use a hot-poured joint sealer that is a mixture of materials compatible with asphalt, with or without rubber. The sealer shall have the following characteristics:

- Forms a resilient and adhesive compound
- Effectively seals joints and cracks in pavements against moisture during repeated cycles of expansion and contraction
- Does not flow from the joint and cannot be picked up by vehicle tires at an ambient temperature of 125 °F (50 °C)

2. Compound Characteristics

   Use a compound that has a uniform pouring consistency capable of completely filling joints without forming large air holes or discontinuities.

   a. Do not pour if the compound temperature is above 450 °F (230 °C).

   b. Follow the pouring temperature and safe heating temperature set by the compound manufacturer for each lot or batch.

   c. Be sure the temperatures are shown on the label. The safe heating temperature is defined as the highest temperature to which the sealing compound can be heated and still meet all the requirements.

3. Physical Characteristics

   Use a hot-poured joint sealer that has the following properties:

Property	Required Measurement
Penetration	Less than 0.35 in (9 mm.)
Flow	Less than 0.12 in (3 mm).
Resilience	Minimum recovery of 60%.
Bond to concrete 0 °F, ± 2 °F (–18 °C, ± 1 °C)	The compound does not separate or have gaps within or between the compound and the blocks.
Compatibility (with asphaltic concrete)	Adhesion does not fail. Oily exudate does not form at the interface between the sealing compound and the asphaltic concrete. The sealant does not soften or have deleterious effects on the asphaltic concrete.

B. Fabrication

General Provisions 101 through 150.

C. Acceptance

The Department will test as follows:

Test	Method
Hot-poured joint sealers	GDT 62

D. Materials Warranty

General Provisions 101 through 150.

833.2.03 Elastomeric Polymer Type Joint Compound

A. Requirements

1. Type

Furnish elastomeric polymer-type joint sealing compound in two components—a base compound and a curing agent.

a. Base compound: A gasoline-resistant elastometric polymer modified with plasticizers, activators, and inert fillers.

b. Curing agent: A blend of accelerators and extenders.

2. Compound Characteristics

Use a sealing compound that can be mixed to a homogenous consistency at the site and applied by an approved mechanical device or poured and troweled manually.

a. If a compound is to be machine-mixed and applied, it shall have a minimum work life of 5 minutes at 80 ºF, ± 5 ºF (27 ºC, ± 3 ºC).

b. If a compound is to be manually mixed and applied, it shall have a minimum work life of 30 minutes at 80 ºF, ± 5 ºF (27 ºC, ±3 ºC).

c. Use a mixture that completely fills the joints without forming air holes or discontinuities, when mixed according to the manufacturer's instructions.

d. Use a compound that is self-leveling when placed in the joint, but that does not show appreciable flow or movement along a superelevated joint.

e. Use material that does not soften or show any apparent defect after being immersed in water for 7 days.

f. Use a material that forms a tack-free, rubber-like compound that seals pavement or bridge joints within 24 hours of application.

3. Physical Properties

Use material that has the following physical properties:

Property	Required Measurement
Cone penetration	Between 0.1 in (2.5 mm) and 0.39 in (10 mm)
Flow	No appreciable flow
Resilience (air- and oven-cured samples)	Minimum recovery of 75%
Bond	No cracks, separation, or other opening over 1/ 4 in. (6 mm) deep in the sealer or between the sealer and block
Solubility	Not to exceed 2 percent; no apparent defects that affect the material as a sealant

B. Fabrication

General Provisions 101 through 150.

C. Acceptance

The Department will test as follows:

Test	Method
Elastomeric joint compound	GDT 15

D. Materials Warranty

General Provisions 101 through 150.

833.2.04 Preformed Elastic Joint Sealer

A. Requirements

This section also covers adhesives and lubricants for the sealers.

1. Type

Use a preformed elastic joint sealer that is a vulcanized elastomeric compound using polymerized chloroprene as the only basic elastomer. The joint sealers include both open and closed cell sealers.

2. Certification
   a. Submit certified test results of each lot of the joint sealer materials furnished to each Project, either from your tests or from the manufacturer of the preformed joint sealer.
   b. The Department will conduct the joint sealer recovery test on random samples from each shipment received or each manufacturer's lot.
   c. Submit certified test results of each lot of the lubricant furnished to each Project, either from your tests or from the manufacturer of the joint sealer lubricant/adhesive or adhesive.
3. Preformed Open Cell Joint Sealer
   a. Bridge and Roadway Seals: Use sealer that meets the following physical requirements:

Physical Property	Requirement
Tensile strength	Min. 2,000 psi (14 MPa)
Elongation at break	Min. 250%
Hardness, Type A durometer	55±5
Oven aging, 70 hours @ 212 °F (100 °C) Tensile strength, change Elongation, change Hardness, change	 Max. -30% Max. -40% +10 points
Oil swell, ASTM oil No. 3: Volume change, 70 hrs. @ 212 °F (100 °C)	 Max. 80%
Ozone resistance, 20% strain: 300 ppm in air, 70 hrs. @ 100 °F (38 °C) (wipe with solvent to remove surface contaminants)	 No cracks
Joint sealer recovery under 50% deflection: Recovery after 70 hrs. @ 212 ºF (100 ºC) Recovery after 72 hrs. @ 14 ºF (-10 ºC) Recovery after 22 hrs. @ –20 ºF (-29 ºC)	 Min. 85% Min. 88% Min. 83%

   b. Bridge Seals: Use a sealer that meets the following compression/deflection requirements:

Nominal Size, in (mm)	Movement Capability*, in (mm)	Min. Force 4 lb. per linear inch (18 N per 25 mm) @ Width, in (mm)	Min. Force–30lb per linear inch (133 N per 25 mm) Max. Force–100 lb per linear inch (445 N per 25 mm) @ Width in (mm)
2 (50)	13/16 (20)	1-7/8 (47)	1-1/16 (27)
2-1/2 (63)	1-1/8 (28)	2-3/8 (60)	1-1/4 (32)
3 (75)	1-3/8 (34)	2-7/8 (73)	1-1/2 (38)
3-1/2 (88)	1-5/8 (40)	3-3/8 (86)	1-3/8 (34)
4 (100)	1-3/4 (43)	3-7/8 (98)	2-1/8 (54)
*Movement capability is the movement allowed within the widths of the specified maximum and minimum forces. The design maximum and minimum joint width is based on these widths. The installation width depends on the temperature at the time of installation.			

c. Roadway Seals: Use a compression/deflection sealer that accommodates the movement specified on the Plans with a minimum force of 4 lbs per linear inch (18 N per linear 25 mm), not exceeding 20 lbs per linear inch (89 N per linear 25 mm), exerted on the joint faces.

4. Preformed Closed Cell Joint Sealer for Roadways

a. Use a preclosed cell polychloroprene joint sealer that meets the following physical requirements:

Physical Property	Requirement
Dimensions	Meet Plan requirements for movement and depth
Surfaces	Smooth and clean
Compression/deflection	Allow movement specified on the Plans with a minimum force of 4 lbs per linear inch (18 N per linear 25 mm) exerted on the joint faces and maximum deflection equal to 50% of the original width
Joint sealer recovery under 50% deflection	85% recovery (compressed to half original thickness for 22 hours @ 158 ºF (70 ºC), then compression removed for 48 hours at room temperature) 85% recovery after 22 hours at 0 ºF (-18 ºC)
Water absorption	Maximum 5% weight increase
Ozone resistance	No cracking after exposure of sample at 20% strain to 100 ppm ozone for 70 hours at 100 ºF (38 ºC)

5. Joint Sealer Lubricants/Adhesives

a. Lubricant/Adhesive for Preformed Roadway Seals: Use a lubricant/adhesive with the joint sealer that is a one-component polychloroprene compound, containing only soluble phenolic resins blended with antioxidants and acid acceptors in an aromatic, hydrocarbon solvent mixture. The lubricant shall have the following physical properties:

Physical Property	Requirement
Average net weight per gallon (liter)	Min. 7.84 lbs (940 grams)
Solid content	22-28% by weight
Film strength	
Tensile strength	Min. 2,300 psi (16 MPa)
Elongation before breaking	Min. 750%

b. Adhesive for Preformed Bridge or Roadway Seals: Use an adhesive that is a one-part moisture curing polyurethane and hydrocarbon solvent mixture with the following physical properties:

Physical Property	Requirement
Average net weight per gallon (liter)	Min. 8 lbs (960 grams)
Solids content	Min. 72% by weight
Film strength (ASTM D 412)	Min. 1,200 psi (8 MPa)
Elongation before breaking	Min. 350%
Viscosity	Perform suitably with the installation equipment Remain fluid from 5 to 120 ºF (-15 to 49 ºC)

6. Product Delivery

Deliver each lot of the lubricant/adhesive in containers plainly marked with the manufacturer's name or trademark, lot number, and date of manufacture.

B. Fabrication

General Provisions 101 through 150.

C. Acceptance

Test as follows:

1. Preformed Open Cell Joint Sealer

Test	Method
Tensile strength and elongation	ASTM D 412
Hardness	ASTM D 2240
Oven-aging	ASTM D 573
Oil swell	ASTM D 471
Ozone Resistance	ASTM D 1149
Joint sealer recovery	GDT 47
Compression/Deflection	GDT 70

2. Preformed Closed Cell Joint Seals for Roadway

Test	Method
Compression/Deflection	GDT 70
Joint sealer recovery (Run the hot recovery at 158 ºF (70 ºC) instead of 212 ºF (100 ºC). Allow seals to recover for 48 hours at room temperature before measuring.)	GDT 47
Water Absorption	ASTM D 1056
Ozone Resistance	ASTM D 471

3. Joint Sealer Lubricants/Adhesives

Test	Method
Film Strength	ASTM D 412

D. Materials Warranty

For joint sealer lubricants/adhesives:

1. Store the lubricant/adhesive at 50 º to 80 ºF (10 º to 27 ºC).
2. Retest any lubricant/adhesive not used within 270 days of its manufacture.

833.2.05 Water-Blown Urethane Joint Filler

A. Requirements

1. Type

   Furnish water-blown urethane joint filler in two components.

   a. Mix according to the manufacturer's recommendations and use in pressure relief joints and regular expansion joints.

   b. Mix the material at the site and foam it in the joint. Use closed-cell material.

2. Physical Requirements

   a. Use the material that meets the following requirements after mixing:

Times at 80 ºF, ± 5 ºF (27 ºC, ± 3 ºC)	Minimum	Maximum
Cream time (interval after mixing the two components and before the material begins to expand).	1 minute	5 minutes
Expansion time (interval between when the material starts and stops expanding).		10 minutes
Tack free time (Determine whether the material is tack free by touching lightly. Begin the time requirement for tack free time when the expansion time ends.)		10 minutes

b. Use material that meets the following requirements after curing:

Physical Property	Requirement
Weight per cubic foot (meter)	4lbs, ± 0.4 lbs (64 kg, ± 6 kg)
Compression to 50% thickness	40 to 130 psi (275 to 895 kPa)
Recovery (compressed to 50% thickness, released, then tested 10 minutes later)	Min. 65%
Extrusion when compressed 50%	Max. 0.125 In (3 mm)
Moisture absorption	Max. 0.10 lb/ft.^{2} (490 g/m^2) of exposed area

B. Fabrication

General Provisions 101 through 150.

C. Acceptance

Test as follows:

Test	Method
Weight per cubic foot (meter)	AASHTO T 42 [omit drying at 220 ºF (104 ºC)]
Compression to 50% thickness	AASHTO T 42
Recovery after compression	AASHTO M 213
Extrusion	AASHTO T 42
Moisture absorption	AASHTO T 42 (calculate absorption based on exposed area)

D. Materials Warranty

General Provisions 101 through 150.

833.2.06 Silicone Sealants and Bond Breakers

Prepare and install silicone and bond breakers according to Section 461.

A. Requirements

1. Silicone

   Furnish silicone sealant in a one-part or two part silicone formulation. Use sealant that is compatible with the surface to which it is applied. Do not use acid-cure sealants on Portland cement concrete.

   a. Use silicone that meets the physical requirements in Table 1. For a list of silicone joint sealant sources, please see QPL 66. Identify silicones as the following types:

      1) Type A—A one part, low modulus, non-sag silicone. Used to seal horizontal and vertical joints in Portland cement concrete pavements and bridges. Tooling is required.

      2) Type B—A one part, very low modulus, self-leveling silicone. Used to seal horizontal joints in Portland cement concrete pavements and bridges. Tooling is not normally required.

3) Type C—A one part, ultra-low modulus, self-leveling silicone. Used to seal horizontal joints in Portland cement concrete pavements and bridges and joints between Portland cement concrete pavement and asphaltic concrete shoulders. Tooling is not normally required.

4) Type D—A two part, ultra-low modulus, self-leveling, rapid cure silicone. Used to seal horizontal joints in Portland cement concrete pavements and bridges and joints between Portland cement concrete pavement and asphaltic concrete shoulders. Tooling is not required.

b. Use silicone sealant evaluated by the National Transportation Product Evaluation Program (NTPEP).

c. Use sealant that is compatible with the surface to which it is applied. Do not use acid-cure sealants on Portland cement concrete.

d. Use silicone that meets the following physical requirements:

Table 1—Physical Requirements for Silicone Sealants

Type Silicone	A	B	C	D
Tensile Stress at 150% Strain, Max. psi (kPa) (Note 1)	45 (310)	40 (275)	15 (105)	25 (175)
Durometer Hardness, Shore [0 ^{o}F and 77 ^{o}F ± 3 ^{o}F (-18 ^{o}C and 25 ^{o}C ± 2 ^{o}C)] (Note 1)	"A" 10-25	"00" 40-80	"00" 20-80	"00" 40-80
Bond to Concrete Mortar, Min. psi (kPa) (Note 1) (Note 3)	50 (345)	40 (275)	35 (240)	35 (240)
Tack Free Time (Skin-over) (Max. Minutes) (Note 2)	90	90	90	30
Extrusion Rate (Min. Grams/Minute) (Note 4)	75	90	100	200-550
Non-volatile (Min. %)	90	90	90	90
Specific Gravity	1.1 - 1.5	1.1 - 1.5	1.1 - 1.5	1.2 - 1.5
Shelf Life (from date of shipment)	6 Months	6 Months	6 Months	6 Months
Movement Capability & Adhesion (Note 1)	No adhesive or cohesive failure after 10 cycles at 0 ^{o}F (-18 ^{o}C).			
Ozone and U.V. Resistance (Note 1)	No chalking, cracking or bond loss after 5,000 hours.			
Note 1: The cure time for these specimens shall be 21 days for Type A and 28 days for Type B, C and D. Specimens shall be cured at 77 ^{o}F ± 3 ^{o}F (25 ^{o}C ± 2 ^{o}C) and 50±5% relative humidity.				
Note 2: At conditions of 77 ^{o}F ± 3 ^{o}F (25 ^{o}C ± 2 ^{o}C) and 50±5% relative humidity.				
Note 3: Type C and D silicone shall also meet its bond strength requirement to asphalt concrete.				
Note 4: Type D extrusion rate shall be within the range specified.				

2. Bond Breakers

Bond breakers shall be chemically inert and resistant to oils, gasoline, solvents, and primer, if one is required.

Install silicone sealants over a bond breaker to prevent the sealant from bonding to the bottom of the joint.

a. Use bond breakers that are chemically inert and resistant to oils, gasoline, solvents, and primer, if one is required.

b. Do not use bond breaker that will stain or adhere to the sealant.

c. Use either a backer rod or tape bond breaker.

1) Backer Rods

Type L	Closed-cell, expanded polyethylene foam
Type M	Closed-cell, polyolefin foam with a closed-cell skin over an open-cell core

- Use backer rods that meet the following physical requirements:

Physical Property	Requirement
Density	2 lb/ft³ (30 kg/m³)min.
Tensile strength	25 psi (170 kPa) min.
Water absorption	0.02 g/cm³ max.

2) Bond Breaking Tapes
   - Type N bond breaking tapes are made from extruded polyethylene with a pressure-sensitive adhesive on one side.
   - Bond breaking tapes may be used with all four types of silicone, but is suitable for bridge joints only.
   - Bond breaking tapes shall have a minimum thickness of .005 in (0.13 mm.).

3. Joint Sealant Certification

   Submit, at no cost to the Department, a minimum of 30 gal (100 L) of material and certified test results on each lot of joint sealant furnished to a Project.

   Submit a certification that verifies the sealant meets all the test requirements of this Specification, except the Bond to Concrete Mortar and Shore Durometer Hardness at 0 ºF (-18 ºC).

B. Fabrication

Prepare and install silicone and bond breakers according to Section 461,.

C. Acceptance

1. Silicone

   Test the silicone as follows:

Test	Method
Tensile stress	ASTM D 412 (die C)
Durometer hardness	ASTM D 2240
Bond to concrete mortar	GDT 106
Tack free time (skin-over)	GDT 106*
Extrusion rate	GDT 106
Non-volatile	GDT 106
Specific gravity	ASTM D 792 (Method A)
Movement capability and adhesion	GDT 106
Ozone and UV resistance	ASTM C 793
*In cases of dispute, use ASTM C 679 as a referee test.	

2. Bond Breakers

   Test the bond breaker backer rods as follows:

Test	Method
Density	ASTM D 1622
Tensile strength	ASTM D 1623
Water absorption	ASTM C 1016

3. Department Responsibility

The Department will:

a. Evaluate the sealant in the field before accepting any silicone sealants that meet the requirements of this Specification.

b. Install the material submitted by the Contractor in roadway and/or bridge joints. The material shall be in place for two winters without failure before being accepted.

c. Reject any sealant or bond breaker that is evaluated and approved, yet fails in actual use.

D. Materials Warranty

General Provisions 101 through 150.

833.2.07 Neoprene for Bridge Deck Joint Seals

A. Requirements

1. Type

Use a neoprene material for bridge deck joint seals that is a vulcanized elastomeric compound with polymerized chloroprene as the only basic elastomer.

a. Ensure the neoprene meets the physical requirements in Table 2.

Table 2—Physical Requirements for Neoprene

Test	Requirements	Test Method
Tensile strength		
Before aging	1500 psi (10 MPa) min.	ASTM D 412
After oven-aging for 70 hrs. @ 212 ºF (100 ºC)	30% max. loss	ASTM D 573
Elongation at breaks		
Before aging	250% min.	ASTM D 412
After oven aging for 70 hrs. @ 212 ºF (100 ºC)	40% max.	ASTM D 573
Hardness Type A Durometer		
Before aging	63 ± 10 points	ASTM D 2240
After oven-aging for 70 hrs. @ 212 ºF (100 ºC)	0 to +15 points change	ASTM D 2240
After aging for 70 hrs. @ 14 ºF (-10 ºC)	0 to +15 points change	ASTM D 2240
Ozone Resistance: After 70 hrs. @ 104 ºF (40 ºC), under 20% strain in 300 ppm in air (Wipe specimens with toluene before test to remove surface contaminants)	No cracks	ASTM D 1149
Weight change in oil After 22 hrs. in oil No. 2 [ASTM D 471]	45% max.	AASHTO M 220
Recover under 50% deflection (type II only)		
After 70 hrs. @ 212 ºF (100 ºC)	85% min.	AASHTO M 220
After 72 hrs. @ 14 ºF (-10 ºC)	88% min.	AASHTO M 220
After 22 hrs. @ –22 ºF (-30 ºC)	85% min.	AASHTO M 220

2. Certification

Submit certified test results on the joint seal system according to Subsection 106.05, “Materials Certification.”

B. Fabrication

General Provisions 101 through 150.

C. Acceptance

Test according to the methods indicated in Table 2.

D. Materials Warranty

General Provisions 101 through 150.

833.2.08 Ethylene Propylene Diene Monomer for Bridge Deck Joint Seals

A. Submittals

1. Type

   Use an ethylene propylene diene monomer (EPDM) material for bridge deck joint seals that is 100 percent EPDM compound.

   Ensure the compound shall meet the following physical requirements:

Physical Property	Requirement
Hardness, Type A Durometer	80 ± 5
Tensile strength	Min. 2,000 psi (14 MPa)
Elongation at break	Min. 200%
Low temperature	Not brittle at –67 ºF (-55 ºC)
Weather resistance	No cracks
Ozone resistance (70 hours, 100 ºF (38 ºC), under 20% strain, 100 ppm in air)	No cracks

2. Certification

   Submit certified test results of the joint seal system according to Subsection 106.05, “Materials Certification.”

B. Fabrication

General Provisions 101 through 150.

C. Acceptance

Test the EPDM as follows:

Test	Method
Hardness, Type A Durometer	ASTM D 2240
Tensile strength	ASTM D 412
Elongation at break	ASTM D 412
Low temperature	ASTM D 746
Weather resistance	ASTM D 1171
Ozone resistance (70 hours, 100 ºF (38 ºC) under 20% strain, 100 ppm in air)	ASTM D 1149

D. Materials Warranty

General Provisions 101 through 150.

833.2.09 Polyurethane Sealant for Inductive Loops

A. Requirements

1. Type

   Use polyurethane sealant that is a one component, moisture-curing, flexible sealant formulated to encapsulate inductive detector loop wires and leads embedded in asphaltic or Portland cement concrete. For a list of sources, see QPL 75.

2. Submit, at no cost to the Department, at least 12, 29 oz. (857 mL) cartridges of the material.
3. Physical Characteristics
   - Use a sealant that will:
   - Remain flexible to –20 ºF (-30 ºC) (necessary to protect the wire from the stress of pavement movement).
   - Fully encapsulate the wire but resist flowing out on inclined or crowned roads.
   - Be compatible with asphaltic concrete.
   - Not soften the asphaltic concrete to a degree that would cause widening of the joint, when installed in a simulated joint in the laboratory.
4. Use a cured polyurethane sealant that meets the following physical requirements:

Physical Property	Requirement
Hardness, Type A Durometer	35-85
Tensile strength	Min. 150 psi (1035 kPa)
Elongation at break	Min. 200%
Flexibility 20 ºF (30 ºC)	No cracks
Weathering resistance	Slight chalking

5. Furnish certified test results of the loop sealant according to Subsection 106.05, “Materials Certification.”

B. Fabrication

General Provisions 101 through 150.

C. Acceptance

1. Test the polyurethane sealant for inductive loops as follows:

Test	Method
Hardness, Type A Durometer	ASTM D 2240
Tensile strength	ASTM D 412 [die C pulled at 20 in (500 mm)/min]
Elongation at break	ASTM D 412 [die C pulled at 20 in (500 mm)/min]
Flexibility –20 ºF (-30 ºC)	25 mil (0.64 mm) free film bend (180°) over a 1/2 in (13 mm) mandrel
Weathering resistance	ASTM D 822; Weatherometer 350 hrs., cured 7 days, 77 ºF (25 ºC), 50% relative humidity

2. Department Responsibility

   The Department will:

   a. Evaluate the polyurethane sealant for inductive loops in the field before approving it for use. The material also must meet the requirements of this Specification.

   b. Install the material in asphaltic inductive loops. The material shall be in place for one winter without failure before being accepted.

c. Reject any sealant that is evaluated and approved, yet fails in actual use.

D. Materials Warranty

General Provisions 101 through 150.

833.2.10 Preformed Foam Joint Filler

A. Requirements

1. Type

   Use a preformed foam joint filler consisting of polyethylene, polyurethane, neoprene, natural rubber, or isomeric polymer closed-cell foam and ultraviolet, stable resistant to oils, chemicals, ozone, and weathering. Ensure the joint filler conforms to the following physical requirements:

Test	Requirement
Cell Structure (Compression—Deflection to 50% of original thickness	Closed Cell 10 – 20 psi (70- 140 kPa)
Recovery (After 50% compression of original thickness)	95% min.
Water Absorption	1% volume max.
Extrusion at 50% compression of original thickness	0.25 in (6 mm) max.

B. Fabrication

General Provisions 101 through 150.

C. Acceptance

Test according to ASTM D 1752.

D. Materials Warranty

General Provisions 101 through 150.

Section 834—Masonry Materials

834.1 General Description

This section includes the requirements for masonry materials, including brick; clay or shale brick; masonry stone; and mortar and grout.

834.1.01 Related References

A. Standard Specifications

Section 801—Fine Aggregate

Section 830—Portland Cement

B. Referenced Documents

AASHTO M 91

AASHTO M 240

AASHTO T 96

AASHTO T 104

ASTM C 5

ASTM C 55

ASTM C 109 (ASTM C 109M)

834.2 Materials

834.2.01 Brick

A. Requirements

1. Use bricks of the following sizes for masonry catch basins, inlets, and manholes. Use other sizes only if approved by the Office of Materials and Research.
   - 8 x 3½ x 2¼ in (190 x 90 x 57 mm)
   - 7½ x 3½ x 3½ in (178 x 90 x 90 mm)
   - 11½ x 3½ x 3½ in (273 x 90 x 90 mm)
2. Use bricks that are relatively straight, sound, and uniform in quality.
3. Clay or Shale Brick: Use clay or shale bricks that meet the requirements of AASHTO M 91.
   a. Ensure that the maximum absorption of any individual clay or shale brick is less than 16 percent when submersed in cold water for 24 hours.
   b. Use only clay bricks that give a clear ringing sound when struck together.
4. Concrete Brick: Use concrete bricks that meet the requirements of ASTM C 55.

B. Fabrication

General Provisions 101 through 150.

C. Acceptance

General Provisions 101 through 150.

D. Materials Warranty

General Provisions 101 through 150.

834.2.02 Masonry Stone

A. Requirements

1. Type: Use stone for rubble masonry that is sound, durable, and does not contain segregations, seams, cracks, pyrite intrusions, or other structural defects or imperfections that affect weather resistance.
   a. Do not use stone with rounded, worn, or weathered surfaces. Exposed faces cannot show scars caused by quarrying. Weathered stone will be rejected.
   b. Ensure that the stone has no more than 65 percent wear and no more than 15 percent loss after the magnesium sulfate soundness test.
   c. Use stone that can be wrought truly to lines and surfaces (curved or plain).
   d. Ensure that each stone is at least 6 in (150 mm) thick and 1 ft (300 mm) wide, except for fill stones used in wall interiors.

B. Fabrication

General Provisions 101 through 150.

C. Acceptance

Test as follows:

Test	Method
Percent Wear	AASHTO T 96
Soundness	AASHTO T 104

D. Materials Warranty

General Provisions 101 through 150.

834.2.03 Mortar and Grout

A. Requirements

1. Use mortar and grout that consists of fresh mixtures of one part Portland or masonry cement and three parts mortar sand and water.

   You may add hydrated lime when using Portland cement in amounts not exceeding 10 percent of the weight of cement.
   a. Cement: Use Portland cement that meets the requirements of Subsection 830.2.01 or masonry cement that meets the requirements of ASTM C 91.
   b. Mortar Sand: Use mortar sand that meets the requirements of Subsection 801.2.02.
   c. Mixing: Mix dry in a mixer or in a clean, tight box, until a uniform mixture is produced. Then add enough water to produce the desired consistency.

      Do not use mortar and grout that has been mixed for more than 45 minutes.

      Retempering of mortar is not permitted.

B. Fabrication

General Provisions 101 through 150.

C. Acceptance

General Provisions 101 through 150.

D. Materials Warranty

General Provisions 101 through 150.

Section 835—Aluminum Powder

835.1 General Description

This section includes the requirements for aluminum powder.

835.1.01 Related References

A. Standard Specifications

General Provisions 101 through 150.

B. Referenced Documents

ASTM D 480

835.2 Materials

835.2.01 Aluminum Powder

A. Requirements

1. Type

   Use an aluminum powder for expanded mortar that is commercially pure, nonleafing, unpolished, and has a low grease content.

2. Gradation

   Ensure the gradation of the coarse particles meets the following:

   Not more than 0.2 percent retained on the No. 100 (150 µm) sieve

   Not more than 10 percent retained on the No. 325 (150 µm) sieve

B. Fabrication

General Provisions 101 through 150.

C. Acceptance

Test as follows:

Test	Method
Fineness	ASTM D 480

D. Materials Warranty

General Provisions 101 through 150.

Section 836—Special Surface Coating for Concrete

836.1 General Description

This section includes the requirements for products used to produce a decorative, protective, water-repellent, masonry-like textured finish on specified surfaces.

836.1.01 Related References

A. Standard Specifications

General Provisions 101 through 150.

B. Referenced Documents

Interim Federal Specification TT-P-0035

Federal Specification TT-C-555B

GDT 71

QPL 17

836.2 Materials

836.2.01 Surface Coatings

A. Requirements

1. Type

   Use a surface coating material that is fine- to heavy-textured and forms a tough adhesive bond to the concrete. For a list of sources, see QPL 17.

   a. Use material that has the following characteristics:

Application rate	50 (± 10) ft²/gal [1.25 (± 0.25) m²/L] without run or sag on vertical surfaces
Dry film thickness (minimum)	15 mils (0.38 mm) at application rate of 50 ft²/gal (1.25 m²/L)
Color	Lusterless gray that matches Federal Standard color No. 36622 (unless specified otherwise on the Plans)

   b. Use grout-type coatings that meet the requirements of Interim Federal Specification TT-P-0035.

   c. Use paint-type coatings that meet the requirements of Federal Specification TT-C-555B.

2. Classification

   Classify special surface coatings as either Class A or B with these compositional characteristics.

   a. Class A—Acrylic Polymer Modified Portland Cement Grout: An adhesive grout of Portland cement, acrylic polymer modifiers, masonry sand, and water.

      Add acrylic polymer modifiers to the cement grout in the form of an emulsion.

   b. Class B—Organic Resin Binder-Type Coating: Pigmented organic binders with suitable texturing agents. Further classify the coatings by solvent/thinner type and resin type.

      1) Type 1—Acrylic Emulsion: A pigmented, 100 percent acrylic polymer with suitable texturing aggregate additions. Do not use polyvinyl acetate and styrene butadiene polymers as modifying agents.

      2) Type 2—Organic Solvent Thinned Vinyl toluene/acrylate copolymer: Pigmented binder in compatible organic solvents with suitable texturing aggregate additions. Use an emulsion polymerization process to form the resinous binder.

3. Submit certified test reports of coating materials from an approved independent laboratory. Submit the results of tests required in this Section and in the referenced Federal Specification.
   a. If the manufacturer that produces the coating changes the formula, submit new certified test reports.
   b. Certify to the following quantitative characteristics:
      - Total solids, percent by weight of the paint
      - Vehicle, percent by weight of the paint
      - Vehicle solids, percent by weight of the vehicle
      - Unit weight

B. Fabrication

General Provisions 101 through 150.

C. Acceptance

Submit to the Engineer the manufacturer's certified test results meeting the applicable Federal Specification and the following requirements when tested according to GDT 71:

1. Freeze-Thaw Resistance: No evidence of cracking, checking, pitting, or adhesion loss after 50 freeze-thaw cycles.
2. Accelerated Weathering: No evidence of cracking, checking, or adhesion loss; no more than slight discoloration after 5000 hours of exposure in a Twin Arc Weatherometer. Use the Weatherometer procedure in GDT 71.

In addition to the previous requirements, no coating will be approved before it completes a two-year field test installation.

D. Materials Warranty

General Provisions 101 through 150.

Section 837—Polymer Concrete

837.1 General Description

This section includes the requirements for polymer concrete.

837.1.01 Related References

A. Standard Specifications

General Provisions 101 through 150.

B. Referenced Documents

AASHTO T 97

ASTM C 109 or C 31

ASTM C 140

ASTM C 531

ASTM C 807

837.2 Materials

837.2.01 Polymer Concrete

A. Requirements

1. Type

   Use a methyl methacrylate (MMA) or polyester polymer concrete that bonds to the substrate with the manufacturer's recommended primer.

   a. Use a polymer concrete that combines a two-component, solvent-free resin and selected clean, dry aggregate.
   b. Use a primer that is a two-component system recommended by the polymer concrete manufacturer. After mixing, apply it with brushes or another suitable method.
   c. Use a primer that is tack-free within one hour of mixing.
   d. Before adding dry aggregate at the job site to increase yield, get approval from the Office of Materials and Research.

2. Physical Characteristics

   Use a polymer concrete similar in color to Portland cement concrete.

   a. Use a polymer that can be mixed and placed like Portland cement concrete.
   b. Ensure that the polymer concrete meets the following requirements:

Characteristic	Requirement
Initial setting time Final setting time	12 minutes minimum 60 minutes maximum
Flexural strength	1,100 psi (7.5 MPa) minimum in 24hours
Minimum compressive strength, 75 °F, ± 5 °F (25 °C, ±3 °C), at:	Compressive Strength—psi (MPa)
2 hours 24 hours 7 days (air cure) 7 days (moist cure)	2,000 psi (15 MPa) 5,000 psi (35 MPa) 6,000 psi (40 MPa) 6,000 psi (40 MPa)
Water absorption	4% maximum
Shrinkage	0.13% maximum
Shear bond strength	200 psi (1.5 MPa) in 24 hrs. minimum

B. Fabrication

1. Packaging and Storage

   a. Package polymer concrete in strong, moisture-proof paper bags or other suitable containers capable of withstanding shipping, normal handling, and storage without breakage.
   b. Clearly label each container of the components of the polymer concrete system with the following information:
      - Component designation
      - Manufacturer's batch number
      - Mixing instructions
   c. Display potential hazards and precautions according to the Federal Hazardous Products Labeling Act.

C. Acceptance

The tests below include procedures to create specimens for the shear bond strength test.

1. When performing acceptance tests, follow the mixing instructions of the manufacturer.
2. Air-cure all test specimens except for the 7-day moist-cure compressive strength cubes.
3. Test as follows:

Test	Method
Setting time	ASTM C 807
Flexural strength	AASHTO T 97 [3 x 3 x 16 in (75 x 75 x 400 mm)] specimens
Compressive strength	ASTM C 109 or C 31, whichever is applicable
Shear bond strength	See procedures below
Absorption	ASTM C 140
Shrinkage	ASTM C 531

4. Shear Bond Strength Procedures

   The shear bond strength in psi (MPa) equals the load in pounds (newtons) divided by the interfacial area of the patch in square inches (square millimeters). Test as follows:

   a. Cast a 8 x 2 x ½ in (200 x 50 x 13 mm) polymer patch on an air-cured 3 x 3 x 8 in (75 x 75 x 200 mm) concrete mortar base.
   b. Saw the base and polymer patch into 2 in (50 mm) segments for testing.
   c. Use a holding device and plunger to apply a load at a rate of 0.05 in (1.3 mm) per minute to the patch until failure occurs.

D. Materials Warranty

Use a polymer concrete with a minimum storage life of 6 months under storage conditions of 40 °to 100 °F (4 °to 38 °C) and a maximum relative humidity of 90 percent.

Section 838—Graffiti Proof Coating for Concrete

838.1 General Description

This section includes the requirements for products that make graffiti-proof coatings and an effective graffiti removal system over specified surfaces.

838.1.01 Related References

A. Standard Specifications

Section 836—Special Surface Coating for Concrete

B. Referenced Documents

QPL 42

838.2 Materials

838.2.01 Graffiti Proof Coating

A. Requirements

1. Type

Select an approved graffiti guard from QPL 42. When using special surface coatings as base coats, ensure the special surface coatings meet Section 836 requirements and the two coatings are compatible.

2. Certification

   Submit a sample and an annual warranty for evaluation each year, or whenever product formulation changes, whichever comes first.

B. Fabrication

General Provisions 101 through 150.

C. Acceptance

1. The Department will evaluate the compatibility of the graffiti-proof coating and the special surface coating as a graffiti guard system.
2. The manufacturer will submit test results from an Independent Laboratory showing that the coating meets the following requirements:
   a. Freeze-Thaw Resistance
      1) No evidence of cracking or adhesive loss after 100 freeze-thaw cycles
      2) Easy to remove dried paint using a cleaner supplied by the producer or a commercial paint stripper
   b. Accelerated Weathering

      No evidence of cracking or adhesive loss and no discoloration after 1,500 hours of exposure in a Twin Arc Weatherometer.

D. Materials Warranty

General Provisions 101 through 150.

Section 839—Corrugated Polyethylene Underdrain Pipe

839.1 General Description

This section includes the requirements for corrugated polyethylene underdrain pipe and fittings used primarily as highway underdrain and temporary slope drains.

839.1.01 Related References

A. Standard Specifications

General Provisions 101 through 150.

B. Referenced Documents

AASHTO M 252

839.2 Materials

839.2.01 Corrugated Polyethylene Underdrain Pipe

A. Requirements

1. Type

   Use corrugated polyethylene underdrain pipe and fittings that meet the requirements of AASHTO M 252, with the following exceptions:

- A maximum elongation of 10 percent
- A gage length to determine percent elongation of 3 ft, ± 1/8 in (900 mm, ± 3 mm)

2. Obtain pipe from an approved source or follow the acceptance process described in Subsection 839.2.01.C, “Acceptance” below.
3. Unless specified otherwise, pipe must be supplied in individual lengths not shorter than 10 ft. (3 m) Coils are not permitted for pipe 6 in (150 mm) or larger in diameter.

B. Fabrication

General Provisions 101 through 150.

C. Acceptance

1. You may use pipe in construction supplied from plants operating on certified acceptance status without prior evaluation by lots.
2. Test any approved or untested material prior to use that has been directly exposed to sunlight for more than 6 months.
3. Pipe lengths that have developed bends that cannot be sufficiently straightened will be rejected.
   a. Straightening of individual pipe lengths by force will be permitted provided that no stress cracking occurs in the process.
   b. Any pipe length that develops stress cracks will be rejected.
4. Certification Process
   a. To qualify as an approved source, the manufacturer must present the following:
      1) Evidence that the manufacturer has an acceptable quality control procedure for raw materials and manufacturing processes
      2) A yearly notarized certification stating that all pipe furnished is manufactured to meet this Specification
   b. The Department will conduct random plant inspections and take random samples at the plant or at the project site for testing.
   c. The Department will remove plants from certified acceptance status when, at any time, they demonstrate inadequate quality control or non-compliance of the pipe material specifications.

D. Materials Warranty

1. Store and use polyethylene tubing properly. It will melt and burn when exposed to flame.
2. This product is flexible, thin-walled, and will temporarily weaken when heated. Be careful to avoid crushing or stretching the pipe on hot days with bright sunlight.

Section 840—Corrugated Aluminum Alloy Pipe

840.1 General Description

This section includes the requirements for the following types of corrugated aluminum alloy pipe:

- Culvert
- Underdrain
- Slope drain
- Structural plate for pipe, pipe arches, and arches

840.1.01 Related References

A. Standard Specifications

General Provisions 101 through 150.

B. Referenced Documents

AASHTO M 190M

AASHTO M 196M

AASHTO M 219M

GDT 17

840.2 Materials

840.2.01 Corrugated Aluminum Alloy Culvert and Underdrain Pipe

A. Requirements

Use corrugated aluminum alloy pipe that meets the requirements of AASHTO M 196M.

B. Fabrication

General Provisions 101 through 150.

C. Acceptance

The Department will inspect corrugated aluminum alloy pipe according to GDT 17.

D. Materials Warranty

General Provisions 101 through 150.

840.2.02 Corrugated Aluminum Alloy Slope Drain Pipe

A. Requirements

Use corrugated aluminum alloy slope drain pipe that meets AASHTO M 196M requirements, with the exception that the pipe is not perforated.

B. Fabrication

General Provisions 101 through 150.

C. Acceptance

The Department will inspect the pipe according to GDT 17.

D. Materials Warranty

General Provisions 101 through 150.

840.2.03 Bituminous Coated Corrugated Aluminum Alloy Culvert Pipe

A. Requirements

1. Use bituminous-coated corrugated aluminum culvert pipe that meets AASHTO M 196M requirements.
2. Use pipe that has a bituminous coat that meets the requirements of AASHTO M 190M for the type of coating specified.

B. Fabrication

General Provisions 101 through 150.

C. Acceptance

The Department will inspect the pipe according to GDT 17.

D. Materials Warranty

General Provisions 101 through 150.

840.2.04 Corrugated Aluminum Alloy Structural Plate for Pipe, Pipe Arches, and Arches

A. Requirements

Use corrugated aluminum alloy structural plate for pipe, pipe arches, and arches that meet the requirements of AASHTO M 219M.

B. Fabrication

General Provisions 101 through 150.

C. Acceptance

General Provisions 101 through 150.

D. Materials Warranty

General Provisions 101 through 150.

Section 841—Iron Pipe

841.1 General Description

This section includes the requirements for iron pipe, including cast iron soil pipe and fittings, and ductile iron pipe and appurtenances.

841.1.01 Related References

A. Standard Specifications

Section 106—Control of Materials

Section 848—Pipe Appurtenances

B. Referenced Documents

ASTM A 74

ASTM B 29

ASTM C 564

ANSI/AWWA A 21.4

ANSI/AWWA A 21.10

ANSI/AWWA A 21.11

ANSI/AWWA A 21.50

ANSI/AWWA A 21.51

ANSI/AWWA A 21.53

841.2 Materials

For each item in this Section, submit a certification from the manufacturer as per the requirements in Subsection 106.05, "Materials Certification."

Include the chemical and physical properties of the materials and their conformance with this Specification on the certification.

841.2.01 Cast Iron Soil Pipe and Fittings

A. Requirements

1. Type

   Use cast iron soil pipe and fittings that meet the requirements of ASTM A 74, including the inside and outside coatings.

   a. Rubber Gasket Joints: Use rubber gasket joints for cast iron soil pipes that meet the requirements of ASTM C 564.

   b. Lead Joints: Use refined lead that meets the requirements of ASTM B 29. Do not use reclaimed lead.

   c. Plain End Cast Iron Soil Pipe: Plain end cast iron soil pipe may be joined with steel bolted couplings if they meet the requirements of Subsection 848.2.02.

B. Fabrication

General Provisions 101 through 150.

C. Acceptance

The Department accepts material that is properly certified by the manufacturer.

D. Materials Warranty

General Provisions 101 through 150.

841.2.02 Ductile Iron Pipe and Appurtenances

A. Requirements

Use ductile iron pipe that meets the requirements of ANSI/AWWA A 21.50 and A 21.51 for the class and joint specified.

1. Fittings

   Use fittings that meet the requirements of ANSI/AWWA A 21.10 or A 21.53 for the class and joint specified.
2. Rubber Gasket Joints

   Use rubber gasket joints that meet the requirements of ANSI/AWWA A 21.11.
3. Flanges

   Use flanges that meet the requirements of ANSI/AWWA A 21.11.
4. Plain End Ductile Iron Pipe

   Plain end ductile iron pipe may be joined with steel-bolted couplings if they meet the requirements of Subsection 848.2.02.
5. Cement Mortar Linings

   Use cement mortal linings that meet the requirements of ANSI/AWWA A 21.4. Line all ductile iron pipe and fittings with cement mortar unless specified otherwise.

B. Fabrication

General Provisions 101 through 150.

C. Acceptance

The Department accepts material that is properly certified by the manufacturer.

D. Materials Warranty

General Provisions 101 through 150.

Section 842—Clay Pipe

842.1 General Description

Specifications for this work will be included elsewhere in the Contract.

Section 843—Concrete Pipe

843.1 General Description

This section includes the requirements for reinforced concrete pipe, nonreinforced concrete pipe, and concrete underdrain pipe.

843.1.01 Related References

A. Standard Specifications

Section 800—Coarse Aggregate

Section 801—Fine Aggregate

Section 831—Admixtures

Section 880—Water

B. Referenced Documents

AASHTO M 86(M 86M), Class II

AASHTO M 170 (M 170M)

AASHTO M 175 (M 175M) or AASHTO M 176 (M 176M)

QPL 4

SOP-19

843.2 Materials

843.2.01 Reinforced Concrete Pipe

A. Requirements

1. Type

   Use reinforced concrete pipe that meets the requirements of AASHTO M 170 (M 170M), with the changes described in the following table. For a list of sources, see QPL 4.

Material	Requirements	Other Modifications
Coarse aggregate	Subsection 800.2.01	Gradation requirements do not apply
Fine aggregate	Subsection 801.2.02	Gradation requirements do not apply
Fly ash	Subsection 831.2.03.A	None
Water	Subsection 880.2.01	None

NOTE: Before manufacture, you may request approval of modified designs that differ from the Specifications.

2. Certification
   a. File a certificate with the Engineer stating that the concrete pipe manufactured for Department use meets the requirements of reinforcement steel specified in this Section.

      A bonded legal authority of the manufacturing company shall endorse the requirements certification.
   b. Submit a guarantee with the certificate stating that concrete pipe will be replaced, without cost to the purchaser, if the reinforcement steel does not meet these Specifications.
   c. Ensure that the guarantee remains in effect as long as the manufacturer furnishes concrete pipe for Department use.
   d. This guarantee does not limit the right of the Department to inspect and check the materials in manufactured concrete pipe prior to and during pipeline construction.

B. Fabrication

General Provisions 101 through 150.

C. Acceptance

The Department will test and inspect using SOP-19.

D. Materials Warranty

See the Certification requirements under Subsection 843.2.01.A.2.

843.2.02 Nonreinforced Concrete Pipe

A. Requirements

1. Type

   Use nonreinforced concrete pipe to convey sewage, industrial waste, and storm water that meets the requirements of AASHTO M 86 (M 86M), Class II, with the following changes:

Material	Requirements	Other Modifications
Coarse aggregate	Subsection 800.2.01	Gradation requirements do not apply
Fine aggregate	Subsection 801.2.02	Gradation requirements do not apply
Fly ash	Subsection 831.2.03.A	None
Water	Subsection 880.2.01	None

B. Fabrication

General Provisions 101 through 150.

C. Acceptance

The Department will test and inspect using SOP-19.

D. Materials Warranty

General Provisions 101 through 150.

843.2.03 Concrete Underdrain Pipe

A. Requirements

1. Type

   Use concrete underdrain pipe that meets the requirements of AASHTO M 175 (M 175M) or AASHTO M 176 (M 176M), with the following changes unless the Plans state otherwise:

Material	Requirements	Other Modifications
Coarse aggregate	Subsection 800.2.01	Gradation requirements do not apply
Fine aggregate*	Subsection 801.2.02	Gradation requirements do not apply
Fly ash	Subsection 831.2.03.A	None
Water	Subsection 880.2.01	None
*Use fine aggregate in standard strength, perforated, nonreinforced concrete underdrain pipe.		

B. Fabrication

General Provisions 101 through 150.

C. Acceptance

The Department will test and inspect using SOP-19.

D. Materials Warranty

General Provisions 101 through 150.

Section 844—Steel Pipe

844.1 General Description

This section includes the requirements for the following types of steel pipe and related materials:

- Corrugated steel culvert pipe and pipe arches
- Bituminous-coated corrugated steel culvert
- Steel structural plate for pipe arches and arches
- Corrugated steel underdrain
- Precoated, galvanized, steel culvert
- Aluminum-coated (Type 2) corrugated steel

844.1.01 Related References

A. Standard Specifications

General Provisions 101 through 150.

B. Referenced Documents

AASHTO M 36M
AASHTO M 167M
AASHTO M 190M
AASHTO M 243M
AASHTO M 245M
AASHTO M 274M
ASTM A849
ASTM A862/A862M

844.2 Materials

Repair any damaged coatings on the steel pipe according to AASHTO M 243M.

844.2.01 Corrugated Steel Culvert Pipe and Pipe Arches

A. Requirements

1. Type

   Use corrugated steel culvert pipe and pipe arches that meet the requirements of AASHTO M 36M, Type I or II culvert pipe for dimensions and thicknesses, except as follows:

   a. Modify AASHTO M 36M, Section 9 to connect all slope drain pipe (except temporary slope drain pipe) with standard one- or two-piece bands. Use bands that completely engage at least one corrugation on each side of the joint or elbow section.

b. Use connecting bands with projections as described in AASHTO M 36M, Section 9, for temporary slope drain, storm drain, and side drain pipe.

c. Use special sections for these conduits, such as elbows and flared ends, that are of the same plate thickness as the conduit to which they are joined, and meet the applicable requirements of AASHTO M 36M, as modified.

B. Fabrication

Furnish shop-formed elliptical pipe and shop-strutted pipe where specified.

C. Acceptance

See the requirements of AASHTO M 36M.

D. Materials Warranty

General Provisions 101 through 150.

844.2.02 Bituminous Coated Corrugated Steel Culvert Pipe

A. Requirements

1. Type

   Use bituminous-coated corrugated steel pipe that meets the requirements of AASHTO M 190M, ASTM A849, and ASTM A862/A862M for the sectional dimensions, plate thickness, and type of bituminous coating.

   a. Use special sections for these conduits, such as elbows and flared ends, that are the same plate thickness as the conduit to which they are joined and meet the applicable requirements of AASHTO M 190M, ASTM A849, and ASTM A862/A862M.

   d. Provide paved inverts (when required) that conform to the listed specifications.

   e. AASHTO M190M and ASTM A849 both contain bituminous material specifications, coating types and coating thickness requirements. Use the requirements of AASHTO M190M when there are discrepancies between the specification requirements.

   f. Use the ASTM 862/A862M requirements for post application of coatings.

B. Fabrication

1. Fully coat coupling bands and special sections, such as elbows, flared end sections and safety end sections with bituminous material.
2. Furnish shop-formed elliptical pipe and shop-strutted pipe where specified.

C. Acceptance

See the requirements of AASHTO M 190M.

D. Materials Warranty

General Provisions 101 through 150.

844.2.03 Steel Structural Plate for Pipe Arches and Arches

A. Requirements

1. Type

   Use structural plates and galvanized corrugated steel for the corrugated steel plate pipe, pipe arches, and arches that meet the requirements of AASHTO M 167M, AASHTO M 36M, and the following requirements, when applicable:

   a. Bituminous Coating: When bituminous coating is specified, use a coating that meets the requirements of AASHTO M 190M for the type specified.

b. Galvanized Corrugated Plates for Pipe: Pipe, pipe arch, and arches may be constructed from corrugated galvanized sheets or plates.

B. Fabrication

1. Bituminous Coating

   After erecting the structure, but before placing any backfill, replace any coating that was removed or damaged during erection, either inside or outside, with bituminous material meeting Subsection 844.2.02.

2. Galvanized Corrugated Plates for Pipe

   No further galvanizing is required after fabrication if the spelter coating was not injured during shipping or erection.

C. Acceptance

See the requirements of AASHTO M 167M and M 36M.

D. Materials Warranty

General Provisions 101 through 150.

844.2.04 Corrugated Steel Underdrain Pipe

A. Requirements

1. Type

   For underdrains, use full-circle, galvanized, corrugated steel pipe that meets the requirements of AASHTO M 36M, Type III, or IIIA for the specified diameters.

   Determine the metal thickness according to the following table:

Nominal Inside Diameter inches (mm)	Thickness inches (mm)
6 (150)	.052 (1.320)
8 (200)	.064 (1.630)
10 (250)	.064 (1.630)
12 (300)	.064 (1.630)
15 (375)	.064 (1.630)
18 (450)	.064 (1.630)
21 (525)	.064 (1.630)
24 (600)	.079 (2.000)

B. Fabrication

General Provisions 101 through 150.

C. Acceptance

See the requirements of AASHTO M 36M.

D. Materials Warranty

General Provisions 101 through 150.

844.2.05 Precoated, Galvanized Steel Culvert Pipe

A. Requirements

1. Type

   Use precoated, galvanized steel pipe that meets the requirements of AASHTO M 245M for the specified sectional dimensions, plate thickness, and type of coating.

   a. Use special sections for these conduits, such as elbows and flared ends, that are the same plate thickness as the conduit to which they are joined and that meet the applicable requirements of AASHTO M 190M.

   b. Use the specified coating and invert paving.

B. Fabrication

1. Fully precoat or coat the coupling bands with bituminous material according to Subsection 844.2.02.
2. Furnish shop-formed elliptical pipe and shop-strutted pipe where specified.

C. Acceptance

See the requirements of AASHTO M 190M.

D. Materials Warranty

General Provisions 101 through 150.

844.2.06 Aluminum-Coated (Type 2) Corrugated Steel Pipe

A. Requirements

Use steel sheet for corrugated steel pipe that meets AASHTO M 274M requirements.

B. Fabrication

Fabricate corrugated steel pipe to the requirements of AASHTO M 36M.

C. Acceptance

See the requirements of AASHTO M 274M.

D. Materials Warranty

General Provisions 101 through 150.

Section 845—Smooth Lined Corrugated Polyethylene (PE) Culvert Pipe

845.1 General Description

This section includes the requirements for smooth-lined, corrugated polyethylene culvert pipe.

845.1.01 Related References

A. Standard Specifications

General Provisions 101 through 150.

B. Referenced Documents

AASHTO M 294

AASHTO Standard Specifications for Highway Bridges, Division II

QPL 51

SOP-28

845.2 Materials

845.2.01 Smooth-lined, Corrugated Polyethylene (PE) Culvert Pipe

A. Requirements

1. Use pipe meeting the requirements of AASHTO M 294, Type S.
2. Use pipe evaluated by the National Transportation Product Evaluation Program (NTPEP) test facility or other approved test facility.
3. Ensure pipe is produced from an approved source listed on QPL 51.
4. **Use fittings and couplings as recommended by the manufacturer and approved by the Office of Materials and Research. The fittings and couplings shall comply with the joint performance criteria of AASHTO Standard Specifications for Highway Bridges, Division II. Ensure that the joints are "soiltight" per the AASHTO bridge specifications.**

B. Fabrication

General Provisions 101 through 150.

C. Acceptance

The Department will test and inspect using SOP-28.

D. Materials Warranty

General Provisions 101 through 150.

Section 846—Polyvinyl Chloride (PVC) Drain Pipe

846.1 General Description

This section includes the requirements for Polyvinyl Chloride (PVC) Drain Pipe.

846.1.01 Related References

A. Standard Specifications

Section 106–Control of Materials

B. Referenced Documents

AASHTO M 304

ASTM F 477

ASTM F 949

ASTM D 3212

QPL 51

SOP-28

846.2 Materials

846.2.01 Polyvinyl Chloride (PVC) Profile Wall Drain Pipe

A. Requirements

Use pipe that meets the requirements of AASHTO M 304.

Ensure pipe is produced from an approved source listed on QPL 51.

Ensure joints are watertight and have elastomeric seals that meet the requirements of ASTM F 477.

Assemble the joints according to the manufacturer's recommendations.

B. Fabrication

General Provisions 101 through 150.

C. Acceptance

The Department will test and inspect using SOP-28.

Have the manufacturer test the joint tightness according to ASTM D 3212 and certify the results according to Subsection 106.05.

D. Materials Warranty

General Provisions 101 through 150.

846.2.02 Polyvinyl Chloride (PVC) Corrugated Smooth Interior Drain Pipe

A. Requirements

Use pipe that meets the requirements of ASTM F 949.

Ensure pipe is produced from an approved source listed on QPL 51.

Ensure joints are watertight and have elastomeric seals that meet the requirements of ASTM F 477.

Assemble the joints according to the manufacturer's recommendations.

B. Fabrication

General Provisions 101 through 150.

C. Acceptance

The Department will test and inspect using SOP-28.

Have the manufacturer test the joint tightness according to ASTM D 3212 and certify the results according to Subsection 106.05.

D. Materials Warranty

General Provisions 101 through 150.

846

B. Fabrication

General Provisions 101 through 150.

Section 847—Miscellaneous Pipe

847.1 General Description

This section includes the requirements for water, storm drain, and sewer pipes. The pipe types are:

- Galvanized steel pipe and fittings
- Steel water pipe
- Copper pipe tubing
- Steel sewer pipe and casing pipe
- Plastic water pipe
- Plastic truss sewer pipe
- Polyvinyl chloride (PVC) sewer pipe and fittings

847.1.01 Related References

A. Standard Specifications

Section 106—Control of Materials

Section 848—Pipe Appurtenances

B. Referenced Documents

ANSI B 16.3	ASTM		
AWWA	A 53/A53M	D 2239	F 477
C 201	A 139	D 2241	F 714
C 202	B 88 (B 88M)	D 2680	F 794
C 203	D 1248	D 3034	F 949
C 205	D 1784	D 3212	F 1483
C 301	D 1785	D 3350	
C 900			

847.2 Materials

Each item under this section requires a certification from the manufacturer according to Subsection 106.05, “Materials Certification.”

847.2.01 Galvanized Steel Pipe and Fittings

A. Requirements

1. Type

   Use galvanized steel pipe that meets the requirements of ASTM A 53/A 53M. Use standard weight pipe unless otherwise specified.
2. Use fittings of malleable iron that meets the requirements of ANSI B 16.3, except the nipples and couplings shall be the same material as the pipe.

B. Fabrication

Hot-dip galvanize all fittings, nipples, and couplings according to ASTM A 53/A 53M.

C. Acceptance

The Department will accept the pipe and fittings based on the certification or on the results of tests conducted by the Department.

D. Materials Warranty

General Provisions 101 through 150.

847.2.02 Steel Water Pipe

A. Requirements

1. Type

   Use materials and requirements indicated in the table:

Material	Meet Requirements of:	Other Requirements
Pipe and fittings	AWWA C 201 or C 202	Use Grade B steel plate. Designate the pipe by operating pressure class.
Bell and spigot joints	AWWA C 202	
Rubber gasket material	AWWA C 301	
Steel-bolted couplings	Subsection 848.2.02	You may join plain-end steel pipe with steel-bolted couplings.
Cement mortar linings	AWWA C 205	
Coal-tar enamel lining and coating	AWWA C 203	

B. Fabrication

General Provisions 101 through 150.

C. Acceptance

The Department will accept the pipe based on the certification.

D. Materials Warranty

General Provisions 101 through 150.

847.2.03 Copper Pipe Tubing

A. Requirements

Use pipe or tubing that meets the requirements of ASTM B 88 (B 88M), Type K.

B. Fabrication

General Provisions 101 through 150.

C. Acceptance

The Department will accept the tubing based on the certification.

D. Materials Warranty

General Provisions 101 through 150.

847.2.04 Steel Sewer Pipe and Casing Pipe

A. Requirements

Type: Use the material and requirements indicated in the table:

Material	Meet Requirements of:	Other Requirements
Steel sewer pipe and casing pipe	ASTM A 53/A 53M or ASTM A 139	The hydrostatic test is not required.
Bell and spigot joints	AWWA C 202	
Rubber gasket material	AWWA C 301	
Steel-bolted couplings	Subsection 848.2.02	You may join plain-end steel pipe with steel-bolted couplings.
Cement mortar linings	AWWA C 205	
Coal-tar enamel lining and coating	AWWA C 203	

Unless the Plans specify otherwise, use standard weight pipe.

B. Fabrication

General Provisions 101 through 150.

C. Acceptance

The Department will accept the pipe based on the certification or on the results of tests conducted by the Department.

D. Materials Warranty

General Provisions 101 through 150.

847.2.05 Plastic Water Pipe

A. Requirements

Type: Use polyethylene (PE) pipe and tubing that meet the requirements of ASTM D 2239 and ASTM F 714, as they apply to PE3408. Use the following pipe sizes and standards:

Pipe Size	Pressure Rating	Other Requirements
1/2 to 3 in (15 to 80 mm) meets ASTM D 2239	200 psi (1.4 MPa) or as specified by Engineer	SIDR (standard thermoplastic pipe dimension ratio) = 7
3 to 42 in (*80 to 1050 mm) meets ASTM F 714	As specified by Engineer	SDR (standard dimension ratio) as specified by Engineer. Use the Iron Pipe Size system.
*Use 3 to 42 in (80 to 1050 mm) pipe for new construction and for replacing old piping systems used to transport water, municipal sewage, industrial process liquids, effluents, slurries, etc., in both pressure and non-pressure systems.		

1. Water Service Line Pipe: Use polyvinyl chloride (PVC) pipe that meets the requirements of ASTM D 2241, SDR 21, ASTM D 1785 Schedule 40, or ASTM F 1483, Class 200, (PVCO). Use a PVC compound that meets or exceeds the requirements of ASTM D 1784, Class 12454 B.
2. Water Main Pipe: Use 4 to 12 in (100 to 300 mm) diameter PVC pipe that meets the requirements of AWWA C 900. See the Plans for the designated dimension ratio (DR).

B. Fabrication

Extrude the pipe from resin that meets the requirements of ASTM D 3350 with a cell classification of PE345434 C, and ASTM D 1248 pipe-grade resin Type III, Class C, Category 5, Grade P 34.

C. Acceptance

The Department will accept the pipe based on the certification or on the results of tests conducted by the Department.

D. Materials Warranty

General Provisions 101 through 150.

847.2.06 Plastic Truss Sewer Pipe

A. Requirements

Type: Use plastic truss sewer pipe, couplings, and fittings that meet the requirements of ASTM D 2680, acrylonitrile butadiene-styrene (ABS), and polyvinyl chloride (PVC) composite sewer piping.

B. Fabrication

General Provisions 101 through 150.

C. Acceptance

The Department will accept the pipe based on the certification.

D. Materials Warranty

General Provisions 101 through 150.

847.2.07 Polyvinyl Chloride (PVC) Sewer Pipe and Fittings

A. Requirements

1. Type

   Use PVC sewer pipe, couplings, and fittings that meet the requirements of ASTM D 3034 (SDR 35), ASTM F 949, or ASTM F 794 (min. pipe stiffness series 46). Ensure that the joints have elastomeric seals that meet the requirements of ASTM F 477.
2. Certification

   Certify the joint tightness according to ASTM D 3212 and submit a certification according to Subsection 106.05, “Materials Certification.”

B. Fabrication

Assemble the pipe according to the manufacturer’s recommendations.

C. Acceptance

The Department will accept the pipe based on the certification.

D. Materials Warranty

General Provisions 101 through 150.

Section 848—Pipe Appurtenances

848.1 General Description

This section includes the requirements for all pipe appurtenances, such as:

- Rubber gaskets
- Steel-bolted couplings
- Gate valves
- Sterilizing agents
- Bituminous plastic cement

848.1.01 Related References

A. Standard Specifications

Section 106—Control of Materials

Section 843—Concrete Pipe

B. Referenced Documents

AASHTO M 198
AASHTO M 315
ASTM C 1619
ASTM D 2000 3AA708Z-B-13
AWWA B 300
AWWA C 500
AWWA M 11
QPL 21

848.2 Materials

848.2.01 Rubber Gaskets for Concrete Pipe

A. Requirements

1. Type

   Use rubber-type gaskets and o-rings meeting the requirements of AASHTO M 315 and ASTM C 1619, Class C. However, pipe used in culvert construction does not need a hydrostatic pressure test.

   Use approved gaskets and o-rings listed in QPL 21

B. Fabrication

General Provisions 101 through 150.

C. Acceptance

The Department will accept gaskets from approved QPL sources only.

D. Materials Warranty

General Provisions 101 through 150.

848.2.02 Steel-Bolted Couplings

A. Requirements

1. Coupling Types

   Use steel-bolted couplings for joining all types of plain end pipe. Ensure the couplings have the following characteristics:

   - Wedge gasket and flared sleeve
   - One steel middle ring, two steel followers, two wedge-shaped rubber-compounded gaskets, and steel bolts
   - Dimensions and type for the size and kind of pipe to be joined, including reducers if required

2. Middle Rings

   a. Ensure middle rings size 0.375 in (10 mm) through 3 in (80 mm) are fabricated from tubing and cold-formed to provide proper flare at each end and to receive the wedge portion of the gasket.

   b. Ensure middle rings size 4 in (100 mm) and larger are made from either bar or plate-flash-welded, cold-formed, cold-expanded beyond the yield point of the steel to size the ring and proof-test the weld.

   c. Air-test all welded rings to ensure the weld is porous-free.

   d. Use middle rings that have a bellowed portion between the flares provided for the gaskets to accommodate pipe deflection.

3. Followers

   a. Ensure the followers meet these requirements:

Size	Fabrication
0.375 in (10 mm) through 1.5 in (40 mm)	One piece steel forgings.
Above 1.5 in (40 mm) through 5 ¼ in(130 mm)	Cold-formed, two-piece construction.
5 ¼ in(140 mm) through 20 in (500 mm)	Hot forged from a single piece circular plate & water quenched after forging for maximum strength.
Above 20 in (500 mm)	Use a special contoured mill section - circle-rolled, flash-welded and cold-expanded beyond the yield point of the steel to size the ring and proof-test the weld.
All followers	Have solid formed gasket recess, free of seams or breaks, to confine the gasket.

4. Gaskets

   Use gaskets meeting the requirements of ASTM D 2000 3AA708Z-B-13, with the following exceptions:

Color	Jet black
Surface	Nonblooming
Shore “A” Durometer hardness	75 ± 5
Tensile strength	800 psi (5.5 MPa) minimum
Elongation	175% minimum

a. Use a rubber compound that will not deteriorate from age or exposure to air under normal storage or use conditions. Use natural or synthetic rubber that does not contain reclaimed rubber.

b. Use gaskets immune to impurities such as odorants, liquid hydrocarbons, carbon dioxide, and water normally found in natural gas.

c. To electrically bond the pipe ends to the center ring, make a permanent bond from material that cannot corrode or deteriorate and is molded into the tip of the gasket.

5. Bolts

Use bolts that have elliptical necks and track heads. Align the elliptical neck and the elliptical hole in the follower so the bolt will not turn.

a. Ensure the shanks of the bolts have enough threads to compress the gasket.

b. Submit to the Engineer the manufacturer's recommended torque for tightening the bolts.

6. Coating

a. Unless otherwise specified, coat all metal parts in the shop to protect them during shipping and storage.

b. After installation, apply a coat of coal-tar enamel to the coupling and uncoated ends of the pipe, according to AWWA M 11.

7. Certification

Submit a certification from the pipe, gasket, or joint manufacturer to the Engineer, according to Subsection 106.05, "Materials Certification." The certificate shall describe the physical properties of the rubber gasket and show the results on hydrostatic tests of the gasket and pipe used in the Work.

B. Fabrication

General Provisions 101 through 150.

C. Acceptance

The Department will accept the material based on the certification.

D. Materials Warranty

General Provisions 101 through 150.

848.2.03 Gate Valves

A. Requirements

Use gate valves meeting the requirements of AWWA C 500.

B. Fabrication

General Provisions 101 through 150.

C. Acceptance

The Department will accept the material based on the certification.

D. Materials Warranty

General Provisions 101 through 150.

848.2.04 Sterilizing Agents

A. Requirements

Use hypochlorites meeting the requirements of AWWA B 300 for sterilizing water systems.

B. Fabrication

General Provisions 101 through 150.

C. Acceptance

General Provisions 101 through 150.

D. Materials Warranty

General Provisions 101 through 150.

848.2.05 Bituminous Plastic Cement

A. Requirements

1. Type

   Use a bituminous compound composed of steam-refined petroleum asphalt or refined coal tar that is dissolved in a suitable solvent and stiffened with a mineral filler with short mineral fibers.

   a. Ensure the material is smooth and uniform, not thick, livered, or separating to a degree that it cannot be remixed by stirring.

   b. Ensure the material can be applied with a trowel, putty knife, or caulking gun without pulling or drawing and has good adhesive and cohesive properties when applied to joint surfaces.

   c. You may apply the material cold to seal the joints of bell-and-spigot or tongue-and-groove storm or culvert pipe.

   d. Ensure the bituminous plastic cement sets to a tough, plastic coating, without blistering when applied 1/16 to 1/8 in (2 to 3 mm) thick on a tinned metal panel and cured at room temperature for 24 hours.

   e. Use bituminous plastic cement with these characteristics:

	Minimum	Maximum
Grease cone penetration	175.00	250
Weight, lbs/gal (kg/L)	9.75 (1.2)	—
Non-volatile, percent	75.00	—
Ash, by ignition, percent by weight	25.00	45

2. Use approved materials from those listed on QPL 21.

B. Fabrication

General Provisions 101 through 150.

C. Acceptance

Test as follows:

Test	Method
Grease cone penetration	AASHTO T 187
Non-Volatile	ASTM D 2939
Ash	ASTM D 128

D. Materials Warranty

General Provisions 101 through 150.

848.2.06 Preformed Plastic Gaskets

A. Requirements

1. Use cold-applied plastic gaskets meeting the requirements of AASHTO M 198 to seal tongue-and-groove concrete culverts, precast manhole, and sewer pipes. However, do not perform the Flash Point COC and Fire Point COC tests.
2. Use approved materials from those listed in QPL 21.

B. Fabrication

General Provisions 101 through 150.

C. Acceptance

The Department will accept materials only from facilities listed in QPL 21.

D. Materials Warranty

General Provisions 101 through 150.

Section 850—Aluminum Alloy Metals

850.1 General Description

This section includes the requirements for all types of aluminum alloy materials, including:

- Sheet and plate
- Bars, rods, shapes, and wire
- Bolts, nuts, and set screws
- Washers
- Rivets
- Shims
- Extruded tubing
- Pipe

850.1.01 Related References

A. Standard Specifications

Section 106—Control of Materials

B. Referenced Documents

1. ASTM
    - B 209/B 209M, Alloy 1100, Temper 0
    - B 209/B 209M, Alloy 6061, Temper T 6
    - B 209/B 209M, Alclad Alloy 2024, Temper T 4
    - B 211/B 211M, Alloy 2024, Temper T 4

- B 221/B 221M, Alloy 6061, Temper T 6
- B 221/B 221M, Alloy 6061, Temper 6
- B 241/B 241M, Alloy 6061, Temper T 6
- B 316/B 316M, Alloy 6061, Temper 6

2. ANSI
   - B 18.2
   - B 1.1M

850.2 Materials

Submit a certification from the manufacturer for each item in this Section, according to Subsection 106.05, "Materials Certification."

850.2.01 Aluminum Alloy Sheet and Plate

A. Requirements

Use aluminum alloy sheet and plate that meets the requirements of ASTM B 209/B 209M, Alloy 6061, Temper T 6.

B. Fabrication

General Provisions 101 through 150.

C. Acceptance

The Department will accept the material based either on the certification or on the results of tests conducted by the Department.

D. Materials Warranty

General Provisions 101 through 150.

850.2.02 Aluminum Alloy Bars, Rods, Shapes, and Wire

A. Requirements

Use aluminum alloy extruded bars, rods, shapes, and wire that meet the requirements of ASTM B 221/B 221M, Alloy 6061, Temper T 6.

B. Fabrication

General Provisions 101 through 150.

C. Acceptance

The Department will accept the material based either on the certification or on the results of tests conducted by the Department.

D. Materials Warranty

General Provisions 101 through 150.

850.2.03 Aluminum Alloy Bolts, Nuts, and Set Screws

A. Requirements

Use aluminum alloy bolts, nuts, and set screws made from rod that meets the requirements of ASTM B 211/B 211M, Alloy 2024, Temper T 4.

1. Use bolt heads and nuts of heavy hexagon that meet the requirements of ANSI B 18.2.
2. Use coarse series, Class 6 fit threads that meet the requirements of ANSI B 1.1M.

B. Fabrication

1. Heat-treat the finished bolts, nuts, and set screws to the T 4 temper.
2. Coat each bolt, nut, or set screw with an anodic coating of at least 0.0002 in (5 µm).
3. Seal the anodic coating with chromate.

C. Acceptance

The Department will accept the material based either on the certification or on the results of tests conducted by the Department.

D. Materials Warranty

General Provisions 101 through 150.

850.2.04 Aluminum Alloy Washers

A. Requirements

Use aluminum alloy washers made from aluminum alloy sheet or plate that meet the requirements of ASTM B 209/ B 209M, Alclad Alloy 2024, Temper T 4.

B. Fabrication

General Provisions 101 through 150.

C. Acceptance

The Department will accept the material based either on the certification or on the results of tests conducted by the Department.

D. Materials Warranty

General Provisions 101 through 150.

850.2.05 Aluminum Alloy Rivets

A. Requirements

Use aluminum alloy rivets that meet the requirements of ASTM B 316/B 316M, Alloy 6061, Temper 6.

B. Fabrication

General Provisions 101 through 150.

C. Acceptance

The Department will accept the material based either on the certification or on the results of tests conducted by the Department.

D. Materials Warranty

General Provisions 101 through 150.

850.2.06 Aluminum Alloy Shims

A. Requirements

Use aluminum alloy shims made from aluminum alloy sheet or plate that meets the requirements of ASTM B 209/B209M, Alloy 1100, Temper 0.

B. Fabrication

General Provisions 101 through 150.

C. Acceptance

The Department will accept the material based either on the certification or on the results of tests conducted by the Department.

D. Materials Warranty

General Provisions 101 through 150.

850.2.07 Aluminum Alloy Extruded Tubing

A. Requirements

Use aluminum alloy extruded tubes that meet the requirements of ASTM B 221/B 221M, Alloy 6061, Temper 6.

B. Fabrication

General Provisions 101 through 150.

C. Acceptance

The Department will accept the material based either on the certification or on the results of tests conducted by the Department.

D. Materials Warranty

General Provisions 101 through 150.

850.2.08 Aluminum Alloy Pipe

A. Requirements

Use aluminum alloy pipe that meets the requirements of ASTM B 241/B 241M, Alloy 6061, Temper T 6, unless otherwise specified.

B. Fabrication

General Provisions 101 through 150.

C. Acceptance

The Department will accept the material based either on the certification or on the results of tests conducted by the Department.

D. Materials Warranty

General Provisions 101 through 150.

Section 851—Structural Steel

851.1 General Description

This section includes the requirements for the grade and toughness of structural steel.

851.1.01 Related References

A. Standard Specifications

Section 106—Control of Materials

B. Referenced Documents

ASTM A 673/A 673M

ASTM A 709 (ASTM A 709M)

ASTM E 23

851.2 Materials

851.2.01 Structural Steel

A. Requirements

1. Type

   Use the structural steel grade specified in the Plans. Ensure the steel meets all requirements of the governing ASTM or AASHTO specification, this Specification, and Plan requirements.

   Ensure that all steel submitted as main load-carrying member components subject to tensile stress meets either S83 or S84 of ASTM A 709 (ASTM A 709M).

2. Certification

   Certify that the steel meets the requirements according to Subsection 106.05, “Materials Certification.”

B. Fabrication

General Provisions 101 through 150.

C. Acceptance

1. Toughness Tests

   Charpy V-Notch tests are mandatory for materials designated on the Plans as main load-carrying member components subject to tensile stress.

   a. Sample the steel according to ASTM A 673/A 673M.

   b. Perform the Charpy V-Notch test according to ASTM E 23.

D. Materials Warranty

General Provisions 101 through 150.

Section 852—Miscellaneous Steel Materials

852.1 General Description

This section includes the requirements for miscellaneous materials, such as:

- Steel bolts, nuts, and washers

- Anchor bolts, nuts, and washers
- High tensile strength bolts, nuts, and washers
- Corrugated steel plank for bridges
- Steel grid for bridge floors

852.1.01 Related References

A. Standard Specifications

Section 106—Control of Materials

B. Referenced Documents

ASTM		
A 123/A 123M	A 570/A 570M	E 376
A 153M/A 153M	A 653/A 653M	F 436
A 325/A 325M	A 709/A 709M	F 568M
A 490/A 490M	A 924/A 924M	F 606 (F 606M)
A 563/A 563M	B 695	F 844
		Recommended Practice E376

ANSI B 1.1M

AASHTO M 314

852.2 Materials

852.2.01 Steel Bolts, Nuts, and Washers

A. Requirements

1. Bolts and Nuts
   a. Use bolts and nuts, hex or heavy hex as required, that meet the applicable requirements of ASTM F 568M.
   b. Ensure all threads meet the requirements of the latest issue of ANSI B 1.1(B 1.1M).
   c. Use bolts that have Class 2A (6H) threads.
   d. Use nuts that have Class 2 B (6G) threads.
   e. Ensure bolts that transmit shear are threaded so that no more than one thread will be within the grip of the metal.
   f. Use bolts long enough to extend entirely through the nut but no more than 1/4 in (6 mm) beyond them.
2. Washers

   Use washers that meet the requirements of ASTM F 844 unless otherwise specified.

B. Fabrication

Galvanizing: When galvanized materials are specified, galvanize all bolts, nuts, and washers by either the hot-dip method in ASTM A 153/A 153M, Class C, or the mechanical deposit method in ASTM B 695, Class 50.

C. Acceptance

General Provisions 101 through 150.

D. Materials Warranty

General Provisions 101 through 150.

852.2.02 Anchor Bolts, Nuts, and Washers

A. Requirements

1. Use anchor bolts, nuts, and washers for structural supports that meet the requirements of AASHTO M 314 Grade 55 (379) unless otherwise shown on the Plans. Supports include those for highway signs, street lighting, traffic signals, bridge bearing plates, and other similar applications.

   Apply Supplementary Requirement S1 of AASHTO M 314 to these materials.
2. Use the grade, shape, and dimensions designated on the Plans.

NOTE: The Department will not accept Grade 105 (724).

B. Fabrication

Galvanizing: Where galvanized materials are specified, galvanize all bolts, nuts, and washers by the hot-dip method in ASTM A 153/A 153M and according to the Plans.

C. Acceptance

General Provisions 101 through 150.

D. Materials Warranty

General Provisions 101 through 150.

852.2.03 High Tensile Strength Bolts

A. Requirements

1. Bolt Type

   Use high tensile strength bolts that meet the requirements of ASTM A325 (A 325M) or ASTM A 490 (A 490M), as specified on the Plans.
2. Nut Type

   Apply these changes to ASTM A 325 (A 325M) and/or ASTM A 490 (A 490M):

   a. Use only the following nuts for the listed high tensile-strength bolts:

Bolt Spec., Type and Finish	Nut Spec., Grade and Finish
A 325 (A 325M), 1 or 2, plain	A 563—DH or DH 3, plain, A194, 2H, plain (A 563M—8S or 8S3, plain)
A 325 (A 325M), 1or 2, zinc coated	A 563—DH, zinc coated, A194, 2H, zinc coated (A 563M—8S, zinc coated)
A 325 (A 325M), 3, plain	A 563—DH 3 plain (A 563M—8S3, plain
A 490 (A 490M), 1 or 2, plain	A 563—DH or DH3, plain, A 194, 2 H, plain (A 563M—10S or 10S3, plain)
A 490 (A 490M), 3, plain	A 563—DH 3, plain (A 563M—10S3, plain)

   b. Ensure all galvanized nuts meet the Supplementary Requirements of ASTM A 563 (A 563M).
3. Washer Type

   Apply these changes to ASTM A 325 (A 325M) and/or ASTM A 490 (A 490M):

a. For bolts that meet ASTM A 325 (A 325M) or ASTM A 490 (A 490M), use washers that meet the requirements of ASTM F 436.

b. Use washers that have the same coating or surface finish as the bolts and nuts.

4. Fastener Assemblies

Provide the Office of Materials and Research at least three samples per lot of each material type furnished to project.

5. Certification Test Reports

Supply certifications on each item according to Subsection 106.05, "Materials Certification." Include on all certifications the item specification number, type or grade, finish, and manufacturer's product-marking symbol.

Also, supply the required Mill Test Reports, Manufacturer Certified Test Reports, and Distributor Certified Test Reports with each shipment, as follows:

a. Mill Test Reports (MTR): Provide an MTR for all mill steel used to manufacture bolts, nuts, and washers. Indicate where the material was melted and manufactured.

b. Manufacturer Certified Test Reports (MCTR): Supply the MCTR to the Department from the manufacturer of the bolts, nuts, or washers. Each MCTR shall:

1) Show relevant information required by ASTM A 325 (A 325M) or ASTM A 490 (A 490M), and this Specification, including test results for any required coating.

2) Include the lot number and location where the bolts, nuts, or washers were manufactured.

3) If the manufacturer furnished the entire assembly (bolts, nuts, and washers), have the manufacturer perform the rotational capacity tests.

4) Furnish the results and when and where all testing was performed.

c. Distributor Certified Test Reports (DCTR): If a distributor purchases the various assembly components from different manufacturers, the distributor may run the rotational-capacity test in lieu of a manufacturer. In this case show test results, manufacturer's component lot numbers, and assigned rotational capacity lot numbers for each combination on the DCTR.

d. The distributor is responsible for furnishing the required MTR, MCTR, and DCTR with each shipment.

B. Fabrication

1. Bolts

a. If coating ASTM A 325 (A 325M) bolts with zinc, use either the hot-dip or mechanically deposited process.

b. Do not hot-dip or electroplate ASTM A 490 (A 490M) bolts with any metallic coating. The bolts become brittle in hydrogen and subsequently crack due to stress corrosion and delayed brittle failure.

c. Apply these changes to ASTM A 325 (A 325M) and/or ASTM A 490 (A 490M) for bolts:

1) Test ASTM A 325 (A 325M) galvanized bolts for embrittlement according to ASTM F 606/F 606M, Section 7.

2) Perform proof load tests (ASTM F 606/F 606 Method 1) for all ASTM A 325 (A 325M) and ASTM A 490 (A 490M) bolts.

2. Nuts

a. Lubricate galvanized nuts with a lubricant that is clean and dry to the touch. Use a lubricant that has a color that contrasts with the zinc coating so that you can obviously see the coating at the job site.

b. Perform proof load tests for all nuts, plain and zinc coated, using the method described in ASTM F 606/F 606M Section 4.2.

c. If you use the nuts with galvanized bolts, run the proof load test after the nut is galvanized, overtapped, and lubricated.

3. Fastener Assemblies (Bolt, Nut, and Washer)

a. Unless otherwise approved by the Engineer, coat the assemblies with a zinc coating according to ASTM A 153/A 153M.

b. Take coating thickness measurements on the wrench flats.

c. No single spot coating thickness measurement shall be less than the required individual specimen value shown on Table 1 of ASTM A 153/A 153M, when taken according to ASTM Recommended Practice E 376.

C. Acceptance

1. Fastener Assemblies (Bolt, Nut, and Washer)
   a. Take coating thickness measurements on the wrench flats according to ASTM Recommended Practice E 376.
   b. Ensure no single coating thickness measurement is less than the required individual Specimen value shown on Table 1 of ASTM A 153/A 153M.
2. Hardness Test

   Perform hardness tests on galvanized components after galvanizing the item and removing the coating.
3. Rotational Capacity Test

   Rotational capacity tests are required on all black or galvanized (after galvanizing) assemblies prior to shipping. The following directions are for Department personnel:
   a. Test each combination of bolt production lot, nut lot, and washer lot as an assembly.
   b. The Project Engineer may require additional rotational-capacity tests on assemblies covered by Subsections 852.2.03.C.4.b.7 and 852.2.03.C.4.b.9.
4. Rotational Capacity Test: Bolts Too Short to Fit in Tension Calibrator
   a. Equipment Required:
      - Calibrated manual torque wrench and a 1ft (300 mm) long wrench.
      - Spacers and/or washers with holes that do not exceed the bolt diameter by 1/16 in (2 mm) for bolts equal to or less than 1 inch (24 mm) in diameter. The hole size for larger bolts shall not exceed the bolt diameter by 1/8 in (3 mm).
      - Steel section with holes to match bolt sizes.

NOTE: Use a plate thick enough to accomplish Step 1 in the procedure without spacers. However, spacers are acceptable.

   b. Procedure:
      1) Mark off a vertical line and lines one-third of a turn, 120 degrees; half of a turn 180 degrees; and two-thirds of a turn, 240 degrees from vertical in a clockwise direction on the plate.
      2) Measure the bolt length, the distance from the underside of the bolt head to the end of the bolt.
      3) Install a nut on the bolt and measure the stick-out of the bolt when three to five full threads of the bolt are located between the bearing face of the nut and the bolt head.
      4) Install the bolt in the appropriate size hole and, if necessary, install the required number of spacers to produce the thread stick-out measured in step 1 (always use at least one washer under the nut).
      5) Snug the nut with the hand wrench. Snug should be the normal effort applied to a 12 in (300 mm) long wrench. Do not exceed 20 percent of the torque determined in step 7.
      6) Align the nut with the vertical (0 degree) stripe on the test frame plate. This is for reference after you rotate the nut during testing.
      7) Tighten the bolt by turning the nut with the torque wrench to the rotation in the table.

Bolt Length (Step 1)	4 bolt dia. or less	4 to 8 bolt dia.	More than 8 bolt dia.
Required rotation	1/3	1/2	2/3

      Use a second wrench to prevent the bolt from turning.
      8) Measure and record the torque required to reach this rotation. Measure torque with the nut in motion. Ensure the torque in foot-pounds (newton-meters) does not exceed the values in the table. Reject any assemblies that exceed the listed torques.

	Torque, Foot-pounds (newton-meters)	
Nominal Bolt Dia., in (mm)	**ASTM A 325(A 325M)**	**ASTM A 490 (A 490M)**
1/2 (M16)	150 (419)	180 (525)
5/8 (M20)	290 (817)	370 (1026)
3/4 (M22)	500 (1111)	625 (1395)
7/8 (M24)	820 (1415)	1020 (1773)
1 (M27)	1230 (2070)	1540 (2592)
1-1/8 (M30)	1500 (2813)	2160 (3520)
1-1/4 (M36)	2140 (4912)	3150 (6158)
1-3/8	2810	3980
1-1/2	3690	5310

9) Continue tightening the nut as follows:

Bolt Length (Step 1)	4 bolt dia. or less	4 to 8 bolt dia.	More than 8 bolt dia.
Required Rotation	2/3	1	1-1/3

10) Measure the rotation from the initial marking in Step 6.

11) Loosen and remove the nut and examine the bolt and nut threads. Reject any assembly that shows evidence of thread shear, stripping, or torsional failure.

NOTE: Reject any assemblies that fracture or are stripped before reaching the required rotation.

5. Rotational Capacity Test: Long Bolts in Tension Calibrator

a. Equipment required:

- Calibrated, measuring device to measure tension for the bolts. Mark off a vertical line and lines one-third of a turn, 120 degrees; and two-thirds of a turn, 240 degrees, from vertical in a clockwise direction on the face plate of the calibrator.
- Calibrated manual torque wrench.
- Spacers and/or washers meeting the requirements of Subsection 852.2.03.C.4.a, bullet 2.
- Steel section to mount the bolt calibrator.

b. Procedure

1) Measure the bolt length, the distance from the underside of the bolt head to the end of the bolt.

2) Put the nut on the bolt and measure the stick-out of the bolt when three to five full threads of the bolt show between the bearing face of the nut and the bolt head.

3) Install the bolt in the tension calibrator. If necessary, install the required number of spacers to produce the thread stick-out measured in step 1 (always use at least one washer under the nut).

4) Tighten the bolt by turning the nut with a hand wrench to the snug tensions listed below [–0 +2 kips (– 0 +9 kN)].

Nominal Bolt Dia., in (mm)	Tension, kips (kN)	
	ASTM A 325 (A 325M)	ASTM A 490 (A 490M)
1/2 (M16)	1(9)	1 (11)
5/8 (M20)	2 (14)	2 (18)
3/4 (M22)	3 (18)	4 (22)
7/8 (M24)	4 (21)	5 (26)
1 (M27)	5 (27)	6 (33)
1-1/8 (M30)	6 (33)	8 (41)
1-1/4 (M36)	7 (47)	10 (60)
1-3/8	9	12
1-1/2	10	15

5) Align the nut to the vertical (0 degree) stripe on the face plate of the bolt calibrator.
6) Use the calibrated manual torque wrench to turn the nut to at least the tension in kips (kN) listed below.

Tension, kips (kN)		
Nominal Bolt Dia., in (mm)	ASTM A 325 (A 325M)	ASTM A 490 (A 490M)
1/2 (M16)	12 (91)	15 (114)
5/8 (M20)	19 (142)	24 (179)
3/4 (M22)	28 (176)	35 (221)
7/8 (M24)	39 (205)	49 (257)
1 (M27)	51 (267)	64 (334)
1-1/8 (M30)	56 (326)	80 (408)
1-1/4 (M36)	71 (475)	102 (595)
1-3/8	85	121
1-1/2	103	148

7) Record both the torque required to reach the tension and the bolt tension value from the calibrator.
   - Measure torque with the nut in motion. The torque cannot be greater than 0.25 x the developed tension in lbf (newtons) x the bolt diameter in feet (meters).
8) Reject assemblies with torque values that exceed the calculated value.
9) Further tighten the nut as follows.

Bolt Length (Step 1)	4 bolt dia. or less	4 to 8 bolt dia.	More than 8 bolt dia.
Required Rotation	2/3	1	1-1/3

10) Measure the rotation from the initial marking in step 5.
11) Record the bolt tension. Reject assemblies that fail prior to this rotation either by stripping or fracture.
12) After the required rotation, the bolt tension in kips (kN) must equal or exceed the values shown in the table. Reject assemblies that do not meet the tension.

Nominal Bolt Dia., in (mm)	Tension, kips (kN)	
	ASTM A 325 (A 325M)	ASTM A 490 (A 490M)
1/2 (M16)	14 (105)	17 (131)
5/8 (M20)	22 (163)	28 (205)
3/4 (M22)	32 (202)	40 (254)
7/8 (M24)	45 (236)	56 (295)
1 (M27)	59 (307)	74 (384)
1-1/8 (M30)	64(375)	92 (469)
1-1/4 (M36)	82 (546)	121 (684)
1-3/8	98	139
1-1/2	118	170

13) Loosen and remove nut and examine the bolt and nut threads. Reject any assembly with any evidence of thread shear, stripping, or torsional failure.

D. Materials Warranty

1. Ship bolts, nuts, and washers from each rotational-capacity lot in the same container.
   a. If shipping only one production lot number for each size nut and washer, you may ship the nuts and washers in the same container.
   b. Permanently mark each container with the rotational-capacity lot number so that identification will be possible at any stage before installation.
2. Black bolts, nuts and washers must be “oily” to the touch when installed. Clean and re-lubricate weathered or rusted bolts, nuts, and washers before installing them.
3. Improperly stored galvanized assemblies will develop white rust. Clean and re-lubricate as in Subsection 852.2.03.B.2.a any bolts, nuts, and washers that show evidence of white rust.

852.2.04 Corrugated Steel Plank for Bridges

A. Requirements

1. Type

   Use steel that meets ASTM A 570/A 570M Grade 33/230 or ASTM A 653/A 653M Grade 37/255 and ASTM A 924/A 924M.
2. Furnish copper steel when specified.
3. Submit a certification according to Subsection 106.05, “Materials Certification.”

B. Fabrication

1. Make corrugated steel bridge plank of shop-fabricated steel plate. Use the gauge shown on the Plans.
2. Form the steel into plank at least 13 in (325 mm) wide and between 2 to 4 in (50 and 100 mm) deep, with at least two complete corrugations.
3. Galvanizing

   When galvanized plank is specified, galvanize the plank as in ASTM A 123/A 123M or ASTM A 653/A 653M Class G210.

C. Acceptance

Acceptance is based on the certification.

D. Materials Warranty

General Provisions 101 through 150.

852.2.05 Steel Grid for Bridge Floors

A. Requirements

1. Use steel that meets ASTM A 709/A 709M Grade 36/250, and has the specified copper content.
2. Submit a certification according to Subsection 106.05, “Materials Certification.”

B. Fabrication

General Provisions 101 through 150.

C. Acceptance

Acceptance is based on the certification.

D. Materials Warranty

General Provisions 101 through 150.

Section 853—Reinforcement and Tensioning Steel

853.1 General Description

This section includes the requirements for reinforcement and tensioning steel, including:

- Steel bars
- Pretensioning steel wire strand
- Post-tensioning steel wire
- Post-tensioning steel bars
- Plain steel bars with threaded ends
- Steel wire
- Steel welded wire reinforcement
- Dowel bars
- Dowel (tie) bars
- Bar supports
- Epoxy coating

853.1.01 Related References

A. Standard Specifications

Section 514—Epoxy Coated Steel Reinforcement

B. Referenced Documents

AASHTO	ASTM	
M 32/ M 32M	A 153/ A 153 M	A 653/ A653M
M 55/ M55M	A 416/ A 416M	A 709/ A 709M
M 221/ M 221M	A 421/ A 421M	A 722/ A 722M
M 225/M 225M		D 1248
M 284/ M284M		

QPL 12

QPL 55

QPL 61

CRSI Manual of Standard Practices

853.2 Materials

A. Requirements

NOTE: Notify the Office of Materials and Research at least two weeks before blast cleaning the steel reinforcement bars and applying the epoxy coating. This time will allow the Department to schedule an inspection.

B. Fabrication

General Provisions 101 through 150.

C. Acceptance

General Provisions 101 through 150.

853.2.01 Steel Bars for Concrete Reinforcement

A. Requirements

1. Type
   a. Use deformed billet steel bars from rolling mills listed on QPL 61and from fabricators listed on QPL 12
   b. Use deformed billet steel bars that meet the requirements of ASTM A 615/ A 615M for bar reinforcement in concrete, unless otherwise designated.
   c. Use deformed billet steel for longitudinal bars in continuously reinforced concrete pavement that meet the requirements of ASTM A 615/ A 615M, Grade 60 (420).

B. Fabrication

General Provisions 101 through 150.

C. Acceptance

The Department will accept the material based on either QPL approval or on tests conducted by the Department.

The Department will not accept bent bars that have been straightened and rebent.

D. Materials Warranty

General Provisions 101 through 150.

853.2.02 Pretensioning Steel Wire Strand

A. Requirements

1. Type

   Use steel wire that meets all the requirements of ASTM A 416/A 416M. Use Grade 270 for prestressed concrete bridge members.

   a. If you plan to use strands that differ in size from those covered in ASTM A 416/A 416M submit to the Engineer complete data on the proposed strands, as stated below.

2. Certification

   Submit a certification from the manufacturer that shows the results of the required tests, including stress-strain curves, and conformance to these Specifications.

B. Fabrication

General Provisions 101 through 150.

C. Acceptance

The Department will accept the steel based on the results of tests made by the Department and the certification from the manufacturer.

D. Materials Warranty

General Provisions 101 through 150.

853.2.03 Post-tensioning Steel Wire

A. Requirements

1. Type

   Use steel cable for post-tensioning that meets ASTM A 421/ A 421M, Type BA or WA, as specified.

2. Certification

   Submit a certification from the manufacturer that shows the results of the required tests, including stress-strain curves, and conformance to these Specifications.

B. Fabrication

General Provisions 101 through 150.

C. Acceptance

The Department will accept the steel based on the results of tests made by the Department and the certification from the manufacturer.

D. Materials Warranty

General Provisions 101 through 150.

853.2.04 Post-tensioning Steel Bars

A. Requirements

1. Type

   Use high-strength steel bars for post-tensioning that meet the requirements of ASTM A 722/ A 722M, Type II.

2. Drawings
   a. Show all appurtenances to be used with the bars on shop drawings.
   b. Show all dimensions and steel requirements on the drawings.
   c. Use the appropriate ASTM designation for the steel, if possible.
3. Certification

   Submit a certification that shows the results of the required tests, including stress-strain curves, and conformance to this Specification.

B. Fabrication

General Provisions 101 through 150.

C. Acceptance

The Department will accept the steel based on the results of the tests made by the Department and on the certification from the manufacturer.

D. Materials Warranty

General Provisions 101 through 150.

853.2.05 Plain Steel Bars—Threaded Ends

A. Requirements

Use plain steel bars with threaded ends that meet the requirements of ASTM A 709/ A 709M, Grade 36 (250), 50(345), or 70W(485W).

B. Fabrication

General Provisions 101 through 150.

C. Acceptance

The Department will accept the steel based on the certification from the manufacturer.

D. Materials Warranty

General Provisions 101 through 150.

853.2.06 Steel Wire for Concrete Reinforcement

A. Requirements

Use steel wire that meets the requirements of AASHTO M 32/ M 32M and AASHTO M 225/ M 225M and is the size shown on the Plans.

B. Fabrication

General Provisions 101 through 150.

C. Acceptance

The Department will accept the steel based on the results of the tests made by the Department or on the certification from the manufacturer.

D. Materials Warranty

General Provisions 101 through 150.

853.2.07 Steel Welded Wire Fabric Reinforcement

A. Requirements

1. Use steel welded wire reinforcement of the size and dimension shown on the Plans and that meets the requirements of AASHTO M 55/ M 55M and AASHTO M 221/ M 221M.
2. Use a vendor listed on QPL 55.

B. Fabrication

General Provisions 101 through 150.

C. Acceptance

The Department will accept the steel based on the results of the tests made by the Department or on a certification from the manufacturer.

D. Materials Warranty

General Provisions 101 through 150.

853.2.08 Dowel Bars

A. Requirements

Type: Use dowel bars for concrete pavement that are plain, round steel bars that meet or exceed the tensile requirements of Table 2–Tensile Requirements for Deformed Bars, ASTM A 615/ A 615M, Grade 40 (300).

B. Fabrication

Coat dowel bars with either high density polyethylene or epoxy, as follows:

1. High Density Polyethylene

   Use polyethylene with the following characteristics

Thickness	12 to 20 mils (0.30 to 0.51 mm)
Texture	Smooth and dense enough to provide adequate bond-breaking characteristics
Undercoating (adhesive)	Modified rubber blend; 2 to 7 mils (0.05 to 0.18 mm) thick

   Ensure that the undercoating retains its elasticity and effectively seals small cuts or abrasions from moisture migrating under the polyethylene plastic outer coating.

2. Epoxy

   Prepare the dowels for coating, select the epoxy material, apply the epoxy, and sample and test the properties of coated bars according to the requirements of Section 514.

   a. Apply a uniform, smooth coating to the bars that results in a film 12 mils, ± 2 mils (0.30mm, ± 0.05 mm) thick after curing.
   b. Do not coat the cut ends.
   c. Handle the coated dowels carefully to prevent damage to the coating or bar. However, bars can be welded through the epoxy to one side of the supportive basket.

C. Acceptance

The Department will accept the steel based on the results of the tests made by the Department or on the certification of the manufacturer.

The Department will reject dowel bars with burred or deformed ends.

D. Materials Warranty

General Provisions 101 through 150.

853.2.09 Dowel (Tie) Bars

A. Requirements

Use uncoated, plain or deformed billet-steel bars that meet the requirements of ASTM A 615/ M, Grade 40 (300)for dowel bars or tie bars in curbs, concrete medians, and other areas specified on the Plans.

B. Fabrication

General Provisions 101 through 150.

C. Acceptance

The Department will accept the steel based on the results of the tests made by the Department or on the certification of the manufacturer.

D. Materials Warranty

General Provisions 101 through 150.

Section 854—Castings and Forgings

854.1 General Description

This section includes the requirements for the following castings and forgings:

- Gray iron drainage castings
- Cast aluminum alloy railing posts
- Aluminum alloy sand mold castings
- Steel castings
- Steel forgings
- Cold-finished carbon shafting
- Steel castings for bridges

854.1.01 Related References

A. Standard Specifications

Section 501—Steel Structures

B. Referenced Documents

AASHTO	ASTM
M 102/ M 102M	ASTM A 27/ A 27M
M 169	ASTM B 26/ B 26 M, Alloy UNS A03560
M 306	ASTM B 108

QPL 11

ANSI 356 Temper T 6

854.2 Materials

854.2.01 Gray Iron Drainage Castings

A. Requirements

Each foundry shall conform to Standard Operating Procedure 18 (SOP 18), “Inspection of Gray Iron Drainage Castings”.

1. Type
   Use gray iron drainage castings that meet the requirements of AASHTO M 306, Class 35B.
   Use foundries listed on QPL 11.

B. Fabrication

General Provisions 101 through 150.

C. Acceptance

The Department will accept the castings based on the following:

- Quality of work and conformance to dimension and shape requirements, including acceptable proof load tests and drawings on file with the Office of Materials and Research-Inspection Services Branch for each casting design supplied.
- Tension bar test results

D. Materials Warranty

General Provisions 101 through 150.

854.2.02 Cast Aluminum Alloy Railing Posts

A. Requirements

1. Type

   Use permanent mold types of cast-aluminum alloy roadway railing post that meet ASTM B 108 requirements.

   Ensure that the finish on the castings meets the specifications on the Plans.

2. Certification

   Submit a report with each shipment of castings that includes test results and certifies compliance with this Specification.

B. Fabrication

General Provisions 101 through 150.

C. Acceptance

The Department will accept the castings based on the following:

- Quality of work and conformance to dimension and shape requirements
- Certification that the physical and chemical properties of the material meet these Specifications

D. Materials Warranty

General Provisions 101 through 150.

854.2.03 Aluminum Alloy Sand Mold Castings

A. Requirements

1. Type

   Use aluminum base alloy and castings that meet the requirements of ASTM B 26/ B 26M, Alloy UNS A03560 or ANSI 356 Temper T 6.

2. Certification

   Submit a report with each shipment of castings that includes test results and certifies compliance with this Specification.

B. Fabrication

Sandblast or otherwise clean the scale and sand off the castings to produce a smooth and uniform surface.

C. Acceptance

The Department will accept the castings based on the following:

- Quality of work and conformance to the dimension and shape requirements, as inspected when received
- Certification that the physical and chemical properties of the material meet these Specifications

D. Materials Warranty

General Provisions 101 through 150.

854.2.04 Steel Castings

A. Requirements

1. Type

   Use carbon steel castings that meet the requirements of ASTM A 27/ A 27M, Grade 65-35 (450-240). Ensure that the form and dimensions of the steel castings are true to pattern.

2. Certification

   Submit a report with each castings shipment that includes test results and certifies compliance with this Specification.

B. Fabrication

1. If the Plans require large castings, suspend and hammer them all over. Ensure that no cracks, flaws, or other defects appear after this treatment. The Department will not accept sharp unfilleted angles or corners.
2. Coat surfaces marked “Finished” as soon as practical after finishing with a corrosion-resistant grease before removing them from the shop.
3. Apply a shop coat of paint to casting surfaces milled for removing scale, scabs, fins, blisters, or other surface deformations. Ensure that the shop coat of paint meets the requirements of Subsection 501.3.04.D.10, “Shop Painting.”

C. Acceptance

The Department will accept the castings based on the following:

- Quality of work and conformance to the dimension and shape requirements, as inspected when received
- Certification that the physical and chemical properties of the material meet these Specifications

D. Materials Warranty

General Provisions 101 through 150.

854.2.05 Steel Forgings

A. Requirements

1. Type

   Use steel forgings that meet the requirements of AASHTO M 102/M 102M for the class shown on the Plans.

2. Certifications

   a. Submit a record to the Engineer of the annealing charges that show the forgings in each charge, the melt or melts from which they were secured, and the treatment they received.

   b. Submit a report with each castings shipment that includes test results and certifies compliance with this Specification.

B. Fabrication

General Provisions 101 through 150.

C. Acceptance

The Department will accept the castings based on the following:

1. Quality of work and conformance to the dimension and shape requirements, as inspected when received
2. Certification that the physical and chemical properties of the material meet these Specifications

D. Materials Warranty

General Provisions 101 through 150.

854.2.06 Cold-finished Carbon Shafting

A. Requirements

1. Type

   Use cold-finished carbon steel bars that meet the requirements of AASHTO M 169 for the grade shown on Plans.

2. Certification

   Submit a certification to the Engineer that shows the chemical properties of the material and conformance to the Specifications.

B. Fabrication

General Provisions 101 through 150.

C. Acceptance

The Department will accept the material based on favorable review of the certification.

D. Materials Warranty

General Provisions 101 through 150.

854.2.07 Steel Castings for Bridges

A. Requirements

1. Type

   Use steel castings for bridge components that meet the requirements of ASTM A 27/ A 27M for the class shown on the Plans.

2. Certification

   Submit a certification to the Engineer that shows the physical and chemical properties of the material and conformance to the Specifications.

B. Fabrication

General Provisions 101 through 150.

C. Acceptance

The Department will accept the material based on favorable review of the certification.

D. Materials Warranty

General Provisions 101 through 150.

Section 855—Steel Pile

855.1 General Description

This section includes the requirements for the following types of steel pile:

- Welded and seamless steel pile
- Fluted steel shell pile
- Steel H-pile

855.1.01 Related References

A. Standard Specifications

General Provisions 101 through 150.

B. Referenced Documents

ASTM A 27/ A 27M

ASTM A 252

ASTM A 709/ A 709M

QPL 37

QPL 44

855.2 Materials

855.2.01 Welded and Seamless Steel Pile

A. Requirements

1. Type

   Use welded and seamless steel pile of the specified dimensions that meets ASTM A 252 requirements. However, use a minimum wall thickness of 1/8 in (3 mm).

   a. Ensure that the pile can be driven to the capacity shown on the Plans without crimping, buckling, or otherwise distorting.

   b. Mark each pile with the heat number or a lot number corresponding to a heat.

2. Certification

   Furnish all certified mill test reports or inspection reports done by an approved testing laboratory to the Engineer. The reports must certify that the pile conforms to these Specifications and show the physical and chemical properties of each heat or lot of materials.

B. Fabrication

General Provisions 101 through 150.

C. Acceptance

The Department will accept the material based on the certifications or on the results of tests conducted by the Department.

D. Materials Warranty

General Provisions 101 through 150.

855.2.02 Fluted Steel Shell Pile

A. Requirements

1. Type

   Use fluted steel shells made of basic open hearth steel that meets the specified dimensions. Use one of the suppliers listed on QPL 44.

   a. Use steel with a minimum tensile yield strength of 50,000 psi (345 MPa).

   b. Use shells with a uniformly tapered lower section, with or without extensions of the same diameter.

c. Reinforce the driving ends of the shells with a collar big enough to withstand being driven without injuring the shell.

d. Weld cast steel driving points to the tips of the shells.

3. Certification

Furnish all certified mill test reports or inspection reports done by an approved testing laboratory to the Engineer. The reports must certify that the pile conforms to these Specifications and show the physical and chemical properties of each heat or lot of materials.

B. Fabrication

General Provisions 101 through 150.

C. Acceptance

The Department will accept the material based on the certifications or on the results of tests conducted by the Department.

D. Materials Warranty

General Provisions 101 through 150.

855.2.03 Steel H-Pile

A. Requirements

1. Type

Use steel for H-pile that meets the requirements of ASTM A 709/A 709M, Grade 36/250. Use one of the suppliers listed on QPL 44.

2. Cast Steel H-pile Points

For each shipment of cast steel H-pile points, submit to the Engineer a report that includes results of tests to certify compliance with ASTM A 27/ A 27M.

Use only the H-pile points shown on QPL 37.

3. Certification

Submit certified mill test reports to the Engineer that show the physical and chemical properties of each heat or lot of materials and compliance with these Specifications.

B. Fabrication

1. Make cast steel H-pile points from cast steel that meets ASTM A 27/ A 27M Grade 65-35 (450-240).
2. Ensure that the points give the maximum protection to the outer corners of the H-pile and have a wide surface area to support the pile flanges.
3. Ensure that the manufacturer’s name or identification mark, pattern number, and heat number are cast or stamped on all castings.

C. Acceptance

1. The Department will accept the material based on the certifications or on the results of tests conducted by the Department.
2. The Geotechnical Bureau of the Office of Materials and Research will evaluate cast steel pile points.

D. Materials Warranty

General Provisions 101 through 150.

Section 857—Bronze Bushings, Bearings, and Expansion Plates

857.1 General Description

This section includes the requirements for the following:

- Bronze bearings and expansion plates
- Bronze bushings
- Self-lubricating bronze bearings, expansion plates, and bushings

857.1.01 Related References

A. Standard Specifications

General Provisions 101 through 150.

B. Referenced Documents

ANSI B 46.1

ASTM B 22, Alloy UNS91100

ASTM B 100, Alloy UNS 51000

ASTM B 584 Alloy UNS C86200

857.2 Materials

857.2.01 Bronze Bearings and Expansion Plates

A. Requirements

1. Type
   Use bearings and expansion plates that meet the following requirements:
   a. Cast Bronze: ASTM B 22, Alloy UNS91100.
   b. Rolled Bronze: ASTM B 100, Alloy UNS 51000.
2. Certification
   Furnish certification to the Engineer showing physical and chemical properties of the material and conformance to these Specifications.

B. Fabrication

Finish contact surfaces of plates in the direction of motion specified by ANSI B 46.1, No. 125 (No. 3.2 µm).

C. Acceptance

The Department will accept the material based on the certifications.

D. Materials Warranty

General Provisions 101 through 150.

857.2.02 Bronze Bushings

A. Requirements

1. Type
   Use bronze bushings that meet ASTM B 584, Alloy UNS C86200 requirements.

2. Certification

   Furnish a certification to the Engineer showing physical and chemical properties of the material and conformance to these Specifications.

B. Fabrication

Finish contact surfaces of bushings in the direction of motion specified by ANSI B 46.1, Nos. 63 to 125 (1.6 to 3.2 µm).

C. Acceptance

The Department will accept the material based on the certifications.

D. Materials Warranty

General Provisions 101 through 150.

857.2.03 Self-lubricating Bronze Bearings, Expansion Plates, and Bushings

A. Requirements

1. Type

   Use self-lubricating bronze bearings, expansion plates, and bushings that meet Subsection 857.2.01 or 857.2.02.

   a. Ensure that the surfaces of self-lubricating bronze bearings, expansion plates, and bushings are bored in a geometric, recessed pattern. Use a lubricating material in the bearing areas that has a long service life.
   b. Lubricate approximately 25 percent of the bearing face.

B. Fabrication

General Provisions 101 through 150.

C. Acceptance

The Department will accept the material based on the certifications.

D. Materials Warranty

General Provisions 101 through 150.

Section 858—Miscellaneous Metals

858.1 General Description

This section includes the requirements for miscellaneous metals, such as lead for plates, pipes, and other uses, and miscellaneous bridge hardware.

858.1.01 Related References

A. Standard Specifications

General Provisions 101 through 150.

B. Referenced Documents

ASTM A 123/ A 123M

ASTM A 153/ A 153M

ASTM B 29

ASTM F 568M

858.2 Materials

858.2.01 Lead for Plates, Pipe, and Other Uses

A. Requirements

1. Use lead for plates, sheet, pipe, and other uses that meets the requirements of ASTM B 29, pig lead.
2. Use common, desilverized lead.

B. Fabrication

General Provisions 101 through 150.

C. Acceptance

General Provisions 101 through 150.

D. Materials Warranty

General Provisions 101 through 150.

858.2.02 Miscellaneous Bridge Hardware

A. Requirements

For miscellaneous hardware, use the design, size, and kind shown on the Plans or as directed by the Engineer.

1. Bolts and Dowels

   Use machine bolts, drift bolts, and dowels that meet the requirements of ASTM F 568M, Class 4.6. Ensure that machine bolts have square heads and nuts and that the screw threads fit closely.
2. Nails and Spikes

   Use steel wire nails and circular, cross-section spikes without taper.

   Use steel boat spikes with forged heads and wedge-shaped shanks and points.

B. Fabrication

Galvanize hardware according to ASTM A 123/ A 123M or ASTM A 153/ A 153M, as applicable if the Plans specify galvanized hardware.

C. Acceptance

General Provisions 101 through 150.

D. Materials Warranty

General Provisions 101 through 150.

Section 859—Guard Rail

859.1 General Description

This section includes the requirements for Guardrail components, such as:

- Guardrail elements, terminal sections, and fittings
- Cable end anchor assemblies

- Steel Guardrail posts and offset blocks
- Wood Guardrail posts and offset blocks

859.1.01 Related References

A. Standard Specifications

Section 106—Control of Materials

Section 863—Preservative Treatment of Timber Products

B. Referenced Documents

ASTM		AASHTO
A 123/ A 123M	A 741	M 180
A 153/ A 153 M	A 769/A 769M	
A 449	B 209 (B 209M)	
A 575	B 211 (B 211M)	
A 576	F 568	
A 709/A 709M		

1994 SPIB rules, paragraph 402

QPL 8

859.2 Materials

859.2.01 Guardrail Elements, Terminal Sections, and Fittings

A. Requirements

1. Steel Guardrail

   Use Guardrail parts that meet AASHTO M 180 requirements and are composed of the following elements:

Bridge railing	Class B, Type II beams
Roadway Guardrail	Class A, Type II beams

   Use Guardrail from suppliers found on QPL 8.

2. Aluminum Guardrail

   Use rail elements made from aluminum alloy alclad 2024-T3 sheet that meets ASTM B 209 (B 209M) requirements. Use the following fittings:

Fittings	Material Requirements
Aluminum bolts	Alloy 2024-T4 [ASTM B 211(B 211M)] with 30-minute anodize and 30-minute seal
Hex nuts	Aluminum alloy 6061-T6, not anodized
Washers	May meet ASTM B 209 (B 209M) Alclad 2024-T4, not anodized

3. Certification

   Submit a certification as in Subsection 106.05, “Materials Certification.”

B. Fabrication

1. General
   a. Make highway Guardrail elements according to the Plans.
   b. Ensure that all Guardrail elements, terminal sections, and fittings are interchangeable with similar parts, regardless of the source or manufacturer.
   c. If constructing Guardrail on curves with a radius of 150 ft (45 m) or less, curve the rail elements in the shop to the radius on the road side of the rail, either concave or convex, as required.
2. Aluminum Guardrail Elements
   a. Form the rail elements into beams at least 1 ft (300 mm) wide and 3 in (75 mm) deep, and at least 0.156 in (3.96 mm) thick.
   b. Form the terminal ends from the same material as the beams or from Alclad 2024-T42.

C. Acceptance

1. Steel Guardrail

   The Department will accept the material based on the provisions of AASHTO M 180 or ASTM B 209 (B 209M).
2. Aluminum Guardrail

   The Department will accept the material based on the manufacturer's QPL status or on tests conducted by the Department.

D. Materials Warranty

Steel Guardrail: Ensure that the manufacturer's logo and heat numbers remain legible for at least 5 years after galvanizing.

859.2.02 Cable and Anchor Assembly

A. Requirements

1. Type

   Ensure that the cable and anchor materials meet the following requirements, unless shown otherwise on the Plans:

Material	Requirements
Anchor and metal plates	Steel, ASTM A 709 (A 709M), Grade 36 (250)
Anchor rod	Steel, ASTM A 575 or A 576, Grade 1020
Anchor cable	Preformed, galvanized wire rope, ASTM A 741, Type II, 3/4 in (19 mm), 6 x 19, with right regular lay
Cable clips and cable thimble	Commercial quality, galvanized, drop-forged steel
Bolts and nuts	ASTM F 568
Swaged fittings	Steel, ASTM A 576, Grade 1035; annealed, galvanized, suitable for cold swaging Ensure the swaged fittings and stud assembly develop at least 100% of the breaking strength of the cable.
Galvanized stud	Steel, ASTM A 449
Concrete deadman	Precast Class A concrete, according to the Plans

2. Certification

   Submit a certification for these materials according to Subsection 106.05, "Materials Certification."

B. Fabrication

Fabricate and assemble according to the Plans.

1. Anchor/Metal Plates

   Build up anchor plates and other metal plates, as shown on the Plans, or form them on a press, with or without welded seams.

2. Anchor Rod

   Drop-forge or form the eye of the anchor rod with a full penetration weld that develops 100 percent of the rod strength.

3. Metal Components:

   a. Galvanize all metal components of the assembly, except the anchor cable, according to ASTM A 123/A 123M.

   b. Galvanize bolts, washers, etc., as stated in ASTM A 153/A 153M.

C. Acceptance

The Department will accept material based on the certification.

D. Materials Warranty

General Provisions 101 through 150.

859.2.03 Steel Guardrail Posts and Offset Blocks

A. Requirements

1. Type

   Use steel posts of the dimensions and shapes shown on the Plans for Guardrails. Unless the Plans show otherwise, use posts that meet the requirements of ASTM A 709 (A 709M), Grade 36 (250) or ASTM A 769 (A 769M) Class I, Grade 40 (380), and found in QPL 8.

2. Certification

   Submit a certification according to Subsection 106.05, “Materials Certification.”

B. Fabrication

Galvanize steel posts and offset blocks according to ASTM A 123/ A 123M.

C. Acceptance

The Department will accept the material based on the certification.

D. Materials Warranty

General Provisions 101 through 150.

859.2.04 Wood Guardrail Posts and Offset Blocks

A. Requirements

1. Grade

   Use posts and offset blocks that meet the requirements for No. 1 timbers, paragraph 402, of the 1994 SPIB rules.

   Do not use offset blocks with splits longer than 3 in (75 mm).

B. Fabrication

2. Tolerances

Ensure that the posts do not vary from the specified length by more than ± 1 in (± 25 mm). If the Plans specify a slope for the top, ensure that the slope does not vary more than ±1/4 in (± 6 mm).

3. Seasoning and Preservative Treatment

   Bore and frame posts, then treat the posts and offset blocks according to the requirements of Section 863.

C. Acceptance

The Department will accept the material based on tests conducted by the Department or on the manufacturer's QPL status.

D. Materials Warranty

General Provisions 101 through 150.

859.2.05 Plastic Offset Blocks

A. Requirements

1. Type

   Use only plastic offset blocks that are listed on QPL 8.

   Use plastic offset blocks that consist of 70 percent low density polyethylene and approximately 30 percent high density polyethylene with a trace of other plastic.

   Other compositions may be used if approved by the Office of Materials and Research.

2. Certification

   Submit a certification according to Subsection 106.05, "Materials Certification."

B. Fabrication

General Provisions 101 through 150.

C. Acceptance

The Department will accept the material based on the manufacturer's certification.

D. Materials Warranty

General Provisions 101 through 150.

Section 860—Lumber and Timber

860.1 General Description

This section includes the requirements for lumber and timber.

860.1.01 Related References

A. Standard Specifications

Section 502, "Timber structures"

Section 863—Preservative Treatment of Timber Products

B. Referenced Documents

American Softwood Lumber Standard PS 20-70, US Department of Commerce or the National Hardwood Association

ASTM D 245

860.2 Materials

For the definition and limitations of defects, use the current manufacturing association grade rules applicable for the species specified.

860.2.01 Lumber and Timber

A. Requirements

1. Saw or finish all lumber and timber as specified from the plants listed in QPL 50.
2. Grades

   Use grade rules from an agency that follows the basic provisions of American Softwood Lumber Standard PS 20-70, US Department of Commerce or the National Hardwood Association.

   a. Furnish all structural timber in the grades, sizes, and finish shown in the Plans and these Specifications, or as directed by the Engineer.

   b. Unless otherwise specified, use No. 2 or higher grade Southern Pine to construct buildings, shelving, and forms.

   c. Mark the grade on the lumber or timber according to the current manufacturing grade rules for the species.
3. Uses

   Refer to Table 1 below for the working stress requirements for various structural uses of lumber and timber.

   a. The numerical stress values in the table are based upon stress-graded material meeting the requirements of grading rules for the indicated stress, developed from the ASTM D 245, “Methods for Establishing Structural Grades of Lumber.”

   b. You may use commercial stress grades of lumber and timber with grade descriptions if the materials will meet the stress requirements under rules developed from ASTM D 245.

B. Fabrication

1. Seasoning and Preservation: Season and treat according to the requirements of Section 863, except use an assay zone for marine lumber timber of .01 to 1 in (0.25 to 25 mm)

C. Acceptance

The Department will accept the material based on inspection certification or on the results of tests conducted by the Department.

D. Materials Warranty

General Provisions 101 through 150.

Table 1: Working Stress Requirements Based on Structural Uses of Timber

Structural Purpose	Sizes of Members	Extreme Fiber in Bending "f" and Tension Parallel to Grain "t"	Compression Across Grain "C"	Horizontal Shear "H"	Compression Parallel to Grain "C"
Truss members, tension—floor beams and stringers—other floor members.	5x8 in (125 x 200 mm)and larger	1800 (12.41)	455(3.14)	120 (0.83)	1400 (9.65)
Caps—posts, bridge and guardrail—sills—mud sills, nailing strips—truss members, compression—timbers, culvert—fender wales—hub guards.	6 x 6 in (150 x 150 mm) and larger	1400 (9.65)	455(3.14)	105 (0.72)	1050 (7.24)
Joists—decking, wearing—other floor members—rails—rail posts— nailing strips—truss members, compression and tension—guard rail.	4 in (100 mm) and thinner	2050 (14.13)	455(3.14)	120 (0.83)	1600 (11.03)
Sub-decking, flat—Sub-decking, laminated—bracing, Sway, sash and longitudinal—girts—bulkhead plank—scupper blocks—cleats— grillage.	4 in (100 mm) and thinner	2050 (14.13)	455(3.14)	120 (0.83)	1600 (11.03)
Cross bridge—sidewalks—fire stops.	2 in and 3 in (50 mm and 75 mm) thick	1500 (10.34)	390 (2.69)	120 (0.83)	1350 (9.31)
Note: Stresses are given in psi (MPa)					

Section 861—Piling and Round Timber

861.1 General Description

This section includes the requirements for timber piles and timber poles.

861.1.01 Related References

A. Standard Specifications

Section 863–Preservative Treatment of Timber Products

B. Referenced Documents

ANSI 05.1

National Electrical Safety Code (National Institute of Standards and Technology)

QPL 50

861.2 Materials

A. Definition and Limitation of Defects

Decay: Disintegration of the wood substance due to wood-destroying fungi. The words “dote” and “rot” mean the same as decay. Red heart is a form of decay.

Compression Wood: An abnormal, dense, hard growth frequently occurring on the underside of limbs and leaning trunks of coniferous trees. It is characterized by very wide and eccentric annual growth rings and includes what appears to be an exceptional proportion of summerwood growth.

The contrast in color between springwood and summerwood, however, is usually less in compression wood than in normal wood.

Turpentine Butt: A scar caused from bleeding the trees to obtain turpentine.

Scar: A damaged surface caused from injury to the tree during growth.

Sweep: Deviation of a piece or stick from a straight line measured from the center of one end to the center of the other end. A straight line from the center of the butt to the center of the tip shall lie entirely within the body of the pile.

Short Crook: A crook in which the direction of the piece or stick changes in a very short distance measured lengthwise.

Burst Check: A crack approximately at right angles to the annual rings, usually radial cracks in sticks from the center or from near the center to the outside, or a combination of this crack and a ring shake caused through either seasoning, exposure to high temperature, or the process of preservative treatment.

Unsound Knot: A knot solid across the face, but containing incipient decay.

Cluster Knot: Two or more knots grouped together, the fibers of the wood being deflected around the entire unit.

A group of single knots with fibers deflected around each knot separately is not a cluster, even though the knots may be close together.

Punk Knot: A fungus decay that extends from the interior of the piece of pile to the outside, which when prodded is usually found to contain a snuff-like substance.

Ring Knots: Three or more knots appearing in the same line of circumference, or any foot of length.

861.2.01 Timber Piles

A. Requirements

1. Use round timber piles of any species of wood that will withstand driving and support the load specified. Use plants listed on QPL 50.
2. Soundness

   Use piles of sound wood, free from decay, red heart, or insect attack.

   a. Cedar and Cypress: The butt ends may have a pipe or stump rot hole not more than 1-1/2 in (40 mm) in diameter. Cypress piles may have peck aggregating not more than 1-1/2 in (40 mm) in diameter.

   b. Southern Pine: Piles may have unsound knots less than half the permitted size of a sound knot, providing that the unsoundness does not extend more than 1-1/2 in (40 mm) deep and that the adjacent areas of the trunk are not affected.
3. Density

   a. All piles shall be dense with at least 6 annual rings per 1 in (25 mm) and 1-1/2 in (40 mm) or more of summerwood (the darker, harder portion of the annual ring), as measured over the outer 3 in (75 mm) of butt diameter on a radial line from the pith.

      The contrast in color between summerwood and springwood shall be sharp and the summerwood shall be darker in color.

b. Piles excluded by the above rule may be accepted provided they have at least four annual rings per 1 in (25 mm) and 1/3 or more summerwood, as measured over the outer 3 in (75 mm) of butt diameter on a radial line from the pith.

4. Knots

a. Sound knots:

For piles 50 ft (15 m) long or less, and in 3/4 of the length of piles over 50 ft (15 m), measured from the butt	Sound knots less than 4 in (100 mm) or 1/3 the diameter of the pile, whichever is smaller.
For the top 1/4 length of piles over 50 ft (15 m) long	Sound knots less than 5 in (125 mm) or 1/2 the diameter of the pile, whichever is smaller
The size of a knot shall be its diameter measured at right angles to the length of the pile.	

b. Unsound knots are not permitted except in Southern Pine piles as specified in Subsection 861.2.01.A.2.b.

c. The sum of sizes of all knots in any 12 in (300 mm) of the pile shall not exceed twice the size of the largest permitted single knot.

5. Holes

Allow holes that average less than 1/2 inch (15 mm) in diameter if the sum of the average diameter of all holes in any 1 ft^2 ($0.1m^2$) of pile surface is less than 1-1/2 in (40 mm).

6. Splits and Shakes

Splits shall not be longer than the butt diameter of the pile.

The length of any shake or combination of shakes in the outer half of the radius of butt of the pile, when measured along the curve of the annual ring, shall not exceed 1/3 the circumference of the butt of the pile.

7. Sapwood

Piles to be treated with preservative shall have at least 1 in (25 mm) of sapwood at the butt end.

8. Heartwood

a. In untreated piles for use in exposed work, the diameter of the heartwood at the butt shall be at least 8/10 of the diameter of the pile at the butt.

b. If high heartwood content is required for untreated foundation piles, the Plans will specify the ratio of heartwood to total diameter.

9. Peeling

a. Peel piles by removing all of the outer bark and at least 80 percent of the inner bark, well distributed over the surface of the pile.

b. If piles will be treated with preservative, do not leave inner bark wider than 1/2 in (15 mm).

c. Do not remove more than three annual rings of the solid wood.

10. Cutting and Trimming

a. Saw butts and tips square with the axis of the pile.

b. Trim or smoothly cut all knots and limbs flush with the surface of the pile or the surface of the swell surrounding the knot.

11. Straightness

In general, a straight line from the center of the butt to the center of the tip shall lie entirely within the body of the pile.

If specified, the Department can accept long piles for foundations (but not for trestles) if the straight line lies partly outside the body of the pile. The maximum distance between the line and the pile shall not exceed 0.5 percent of the length of the pile or 3 in (75 mm), whichever is smaller.

12. Taper

Cut piles above the butt swell so it has a continuous taper from the point of butt measurement to the tip.

13. Twist of Grain

    Do not allow spiral grain to exceed 180 degrees of twist when measured over any 20 ft (6 m) section of the pile.

14. Limits of Defects
    a. Piles shall not have short crooks that deviate more than 2-1/2 in (65 mm) from straightness in any 5 ft (1.5 m) length.
    b. Burst checks in piles shall be less than 1 in (25 mm) wide, measured at the outside, and shall not extend over 12 in (300 mm) long.

15. Circumferences, Diameters, and Lengths
    a. The circumferences of piles measured under the bark shall have the minimum and maximum values in Table 1 (metric Table 1) for the class specified. No more than 10 percent of the piles in any shipment may have circumferences 2 in (50 mm) less than the tabulated minimum values.

    NOTE: Requirements for tip circumference of piles that are longer than the required length may be applied at the tip end of the required length.

    b. The ratio of the maximum to the minimum diameter at the butt of any pile shall not exceed 1.2.
    c. Individual piles may vary from the length specified by ± 12 in (300 mm) in piles shorter than 40 ft (12 m), and ± 2 ft (600 mm) in piles 40 ft (12 m) or longer.
    d. The average length of all piles of a specified length in each lot shall not be less than the length specified.

Table 1
Circumferences and Diameters of Timber Piles

	3 ft (900 mm) from butt				At tip, minimum	
	Minimum		Maximum			
Length	Circumference	Dia. (approx.)	Circumference	Dia. (approx.)	Circumference	Dia. (approx.)
Feet (meter)	In (mm)	In (mm)	In (mm)	In (mm)	In (mm)	In (mm)
	Douglas Fir, Hemlock, Larch, Pine, Spruce, or Tamarack					
Under 40 (12)	38 (950)	12 (300)	63 (1575)	20 (500)	25 (625)	8 (200)
40 to 50 (12 to 15)	38 (950)	12 (300)	63 (1575)	20 (500)	22 (550)	7 (175)
51 to 70 (15.1 to 21.4)	41 (1025)	13 (325)	63 (1575)	20 (500)	22 (550)	7 (175)
71 to 90 (21.5 to 27.5)	41 (1025)	13 (325)	63 (1575)	20 (500)	19 (475)	6 (150)
Over 90 (27.5)	41 (1025)	13 (325)	63 (1575)	20 (500)	16 (400)	5 (125)
	Oak and Other Hardwoods, Cypress					
Under 30 (9)	38 (950)	12 (300)	57 (1425)	18 (450)	25 (625)	8 (200)
30 to 40 (9 to 12)	41 (1025)	13 (325)	63 (1575)	20 (500)	22 (550)	7 (175)
Over 40 (12)	41 (1025)	13 (325)	63 (1575)	20 (500)	19 (475)	6 (150)
	Cedars					
Under 30 (9)	38 (950)	12 (300)	69 (1725)	22 (550)	25 (625)	8 (200)
30 to 40 (9 to 12)	41 (1025)	13 (325)	69 (1725)	22 (550)	25 (625)	8 (200)
Over 40 (12)	41 (1025)	13 (325)	69 (1725)	22 (550)	22 (550)	7 (175)

NOTE: If the pile length is 25 feet (7.6 m) or less, a minimum circumference of 34 in (850 mm) and minimum diameter of 11 in (275 mm) at a point 3 ft (900 mm) from the butt are required.

16. Branding and Inspection
    a. Ensure the pile length and the diameter of the butt and tip are branded in the butts of the piles.
    b. Legibly brand the Preliminary inspection date in the tips.

B. Fabrication

Seasoning and Preservative Treatment: Where required, season and treat according to Section 863.

C. Acceptance

The Department will reject the pile based on any of the following defects:

- Decay
- Deep scars
- Unsound knots
- Punk knots
- Ring knots
- Cluster knots
- Compression wood (if readily identifiable based on ordinary visual inspection)

The Department may accept piles with sound turpentine scars undamaged by insects, provided they meet all other requirements.

D. Materials Warranty

General Provisions 101 through 150.

861.2.02 Timber Poles

A. Requirements

1. Select timber poles from plants listed on QPL 50.
2. Ensure that the poles that meet the requirements of the latest revision of ANSI 05.1, in the National Electrical Safety Code published by the National Institute of Standards and Technology, with the following exceptions:
    a. Section 2 Definitions—Modify the "Short Crook" definition as follows:

    "Any localized deviation from straightness within any section 5 ft (1.5 m) or less in length shall not be more than 1 in (25 mm) when measured with a straightedge parallel to the long axis of the pole."

    b. Section 4 Material Requirements, 4.4.9 Shape (1), (a)—shall read as follows:

    "For poles 50 ft (15 m) and shorter, of all species except northern white cedar, a straight line joining the edge of the pole at the butt and the edge of the pole at the top, in 90 percent or more of those poles supplied, shall not be distant from the surface of the pole at any point by more than 1 in (25 mm) for each 10 ft (3 m) of length between these points. In the remainder of those poles supplied (10 percent), the poles may have a deviation of 1 in (25 mm) for each 6 ft (1.8 m) of length when measured as above."

    c. Section 4 Material Requirements, 4.4.9 Shape (2)—shall read as follows:

    "Sweep in two planes (double sweep) - NOT PERMITTED."
3. Use the class and length specified on the Plans.
4. You may peel poles by machine, except that poles more than 55 ft (17 m) long may be debarked and trimmed by hand in lieu of machine peeling. Trim so that you preserve the buttressing effects of all overgrown knots.
5. Unless otherwise specified or indicated on the Plans, frame poles with flat roofs and slab grains.

6. Frame, drill, and machine poles as necessary before preservative treatment.

B. Fabrication

Seasoning and Preservative Treatment: Where required, season and treat according to Section 863.

C. Acceptance

General Provisions 101 through 150.

D. Materials Warranty

General Provisions 101 through 150.

Section 862—Wood Posts and Bracing

862.1 General Description

This section includes the requirements for wood fence posts and bracing, and wood sign posts.

862.1.01 Related References

A. Standard Specifications

Section 859—Guard Rail Components

Section 863—Preservative Treatment of Timber Products

B. Referenced Documents

ASTM A 525M

QPL 50

862.2 Materials

862.2.01 Wood Fence Posts and Bracing

A. Requirements

1. Type
   Use Southern Pine for wood posts and bracing. Use the dimensions specified on the Plans.
2. Physical Characteristics
   Use posts and bracing that have the following characteristics:
   - Be round or sawed, but all posts on a single Project shall be the same.
   - Be cut from sound and solid trees and contain no unsound knots. Accept sound knots if the diameter of the knot does not exceed 1/3 of the diameter of the piece at the point where it occurs.
   - Be free from decayed wood, rot, and red heart, and a ring shake and season checks that penetrate at any point more than 1/4 the diameter of the piece, or are greater than 1/4 in (6 mm) wide.
   - Show at least four annual rings per 1 in (25 mm), and at least 1/3 summerwood unless using Southern Pine veneer cores.
   - Have no short or reverse bends.
3. Draw a line from the center of the top to the center of the butt. The line shall not fall outside the body of the post, nor be more than 2 in (50 mm) from the geometric center of the post at any point.

4. The maximum allowable change in diameter of the post shall not exceed 1-1/2 in (38 mm) in 10 ft (3 m).
5. Accessories

   Use metal caps to cover the tops of the posts. Use caps that are at least 0.008 in (0.20 mm) thick.

   Use material that is aluminum or galvanized steel with 1.25 oz/ft² (380 g/m²) coating according to ASTM A 525M. Use caps only when required by the Plans.

B. Fabrication

1. Peel all posts and bracing for their full length. Remove all bark and inner skin.
2. Trim knots close to the body of the post before treatment.
3. Saw all butts and tips square. For posts that will be driven, you may make the butt end pointed before treatment.
4. Seasoning and Preservative Treatment

   Treat all posts according to the requirements of Section 863.

C. Acceptance

Check QPL 50 for pre-approved manufacturers that supply materials compliant with this Specification.

D. Materials Warranty

General Provisions 101 through 150.

862.2.02 Wood Sign Posts

A. Requirements

1. Unless otherwise specified, surface wood sign posts on all four sides to the dimensions specified.
   a. Ensure wood sign posts meet the same quality requirements as wood guard rail posts in Subsection 859.2.04, “Wood Guard Rail Posts and Offset Blocks.”
   b. Ensure posts do not vary from the specified length by more than ± 1 in (25 mm).
   c. Trim both ends of the posts.
2. Accessories

   Use metal caps to cover the tops of the posts. Use caps that are at least 0.008 in (0.20 mm) thick.

   Use material that is aluminum or galvanized steel with 1.25 oz/ft² (380 g/m²) coating according to ASTM A 525M. Use caps only when required by the Plans.

B. Fabrication

1. Seasoning and Preservative Treatment

   Bore and frame posts before treating them. Treat the posts according to the requirements of Section 863.

C. Acceptance

General Provisions 101 through 150.

D. Materials Warranty

General Provisions 101 through 150.

Section 863—Preservative Treatment of Timber Products

863.1 General Description

This section includes the requirements for applying preservatives, conditioning, treating, inspecting, marking, testing, and documenting the necessary information for treated timber used in Department Work.

863.1.01 Related References

A. Standard Specifications

General Provisions 101 through 150.

B. Referenced Documents

American Wood Preservers Association (AWPA), C14, "Wood for Highway Construction— Preservative Treatment by Pressure Method"

AWPA C2

AWPA M2

AWPA M3

AWPA P9

AASHTO M 133

QPL 50

863.2 Materials

863.2.01 Conditioning and Preservative Treatment

A. Requirements

1. Condition and preservative treat all timber products to meet the requirements of American Wood Preservers Association (AWPA) Standard C14, "Wood for Highway Construction—Preservative Treatment by Pressure Method," except as described in this Section.
2. Treatment Plants

   Ensure treatment plants comply with quality control procedures in AWPA M3.

   a. To expedite the work, a commercial inspection agency approved by the Department will inspect and test all treated timber products, including any preservative treatment at the treatment plant before it is delivered to the project. The treament plant shall bear all the cost associated with the inspection and test.

   b. Before requesting an inspection, the authorities of the treatment plant shall acquaint themselves with the timber specification requirements and shall segregate the material to be inspected for Department work from other stock.
3. Preservatives

   Use preservatives that meet the requirements in the AWPA Standard, unless otherwise specified in the Plans or the Specifications.

   a. You may select one of three preservatives (creosote, pentachlorophenol, Chromated Copper Arsenate (CCA)) from the Materials and Usage Table in AWPA C14.

   b. Ensure pentachlorophenol solutions have at least 5 percent pentachlorophenol, by weight, dissolved in the petroleum solvents specified or pentachlorophenol in AWPA P9, Type "A."

B. Fabrication

1. As practicable, cut, frame, and bore timber before treatment.
2. Condition the timber first. For Southern Pine species, use the following treatment:

Penta-petroleum	Dry in kiln to 30% average moisture content or less or condition in steam
Chromated Copper Arsenate (CCA)	Dry in kiln to 25% average moisture content or less

NOTE: Do not heat the wood in the preservative, and do not use Boulton drying.

3. Preservative Penetration

   Ensure the preservative penetrates at least 3 in (75 mm) or 90 percent of the sapwood for all lumber, timber, wood fence posts, and ties in contact with the ground.

   a. Ensure lumber, timber, and ties that do not contact the ground meet AWPA C2 requirements.
   b. Ensure preservative penetrates all other materials, piles, and poles according to applicable AWPA requirements.
4. Preservative Retention

   Treat guard rail posts and offset blocks with pentachlorophenol or CCA with a minimum 0.6 lb/ft³ (9.6 kg/ m³) retained in the outer 0.6 in (15 mm), as required in AWPA C14 and C2.
5. Retreatment:

   You may retreat a charge of material, or a portion of it, if the initial treatment does not meet requirements for retention, penetration, or appearance. The Department will allow only one retreatment.

NOTE: The Department will reject any damage due to retreatment.

6. Conditioning after Treatment
   a. Condition material that is dust-free.
   b. For lumber or timber that is treated with water-borne preservative and is to be painted, dry by air, kiln, or some method of artificial conditioning, to a moisture content of not more than 19 percent of the weight of the oven-dry wood.
   c. Protect the treated lumber from the elements with a prime coat of paint or other approved means.
   d. Ensure the moisture content does not rise above 19 percent before applying the first coat of paint.
   e. Dry material treated with water-borne preservative that will not be painted to surface dryness in air or otherwise before installing it.

C. Acceptance

1. Inspection

   The Department will sample and test preservatives according to the requirements of AASHTO M 133.

NOTE: Check QPL 50 for pre-approved manufacturers that supply material compliant with this specification.

   a. The Department will determine the level of preservative retention by testing the 0.6 to 1.5 in (15 to 38 mm) assay zone.
   b. Unless otherwise provided, an approved commercial inspection agency will inspect treated timber products according to AWPA M2.
   c. The Inspector will test before, during, and after treating.
2. Marking

The Inspector will mark each acceptable piece with a hammer stamp before and after treatment.

a. Stamp only 25 percent of the offset blocks after treatment.

b. Ensure that both inspection stamps identify the Inspector. Ensure that the before-treatment stamp is clearly distinguished from the after-treatment stamp.

3. Reporting

The Inspector from an approved commercial inspection agency shall:

a. Prepare reports of the treating process and results of the inspection that confirm treatment was completed according to these Specifications.

b. Furnish these reports to the Office of Materials and Research.

c. Report according to AWPA M2.

d. Get a shipping report from the treatment plant showing the project number, purchaser, sizes and amounts of materials, and preservative type for each shipment for Department Work.

e. Furnish the shipment report and the treatment report to the Office of Materials and Research.

D. Materials Warranty

1. Retest treated material that has been in stock for two years before using.
2. The Department will reject any materials that fail to meet specifications unless they are retreated to meet all applicable requirements.

Section 865—Manufacture of Prestressed Concrete Bridge Members

865.1 General Description

This section includes the following requirements for precast-prestressed concrete bridge members and piling:

- Manufacturing
- Inspecting
- Testing
- Marking
- Painting
- Rubbing as specified
- Plant handling
- Storing
- Shipping

The term “precast-prestressed concrete” is referred to as “prestressed concrete” in the rest of this Section.

865.1.01 Related References

A. Standard Specifications

Section 106–Control of Materials

Section 152–Field Laboratory Building

Section 500–Concrete Structures

Section 511–Reinforcement Steel

Section 514–Epoxy Coated Steel Reinforcement

Section 801–Fine Aggregates

Section 830–Portland Cement

Section 831–Admixtures

Section 853–Reinforcement and Tensioning Steel

Section 857–Bronze Bushings, Bearings, and Expansion Plates

Section 870–Paint

Section 885–Elastomeric Bearing Pads

Section 886–Epoxy Resin Adhesives

B. Referenced Documents

AASHTO M 55

AASHTO M 85

AASHTO M 221

AASHTO T 22

AASHTO T 27

ASTM A 123/A 123M)

ASTM A 153/A 153M)

ASTM A 185

ASTM A 416

ASTM A 497

AASHTO Specification for Highway Bridges

Laboratory SOP-3, Standard Operating Procedures for Precast/Prestressed Concrete

QPL 9

GDT 35

865.2 Materials

Use materials that meet the specifications as follows:

Material	Section
Concrete, Class AAA (except as noted)	500
Steel Bars for Reinforcement	853.2.01
Pretensioning Steel Wire Strand	853.2.02
Post-Tensioning Steel Wire	853.2.03
Post-Tensioning Steel Bars	853.2.04
Plain Steel Bars—Threaded Ends	853.2.05
Portland Cement	830.2.01
Fine Aggregate for Mortar	801.2.02
Aluminum Powder	835.2.01

Self-Lubricating Bronze Bearing and Expansion Plates and Bushings	857.2.03
Primer Coats	870
Elastomeric Pads	885.2.01
Epoxy Resin Adhesive	886
Microsilica (Silica Fume)	831.2.03

NOTE: Do not use accelerators (24-hour accelerated strength concrete) that contain chlorides in any prestressed concrete.

865.2.01 Prestressed Concrete Bridge Members

A. Requirements

1. Portland Cement

   Use Type I, Type II, or Type III cement that meets requirements of AASHTO M 85 for low alkali cement.

   a. Use Type II cement in concrete to cast pile for specific locations noted on the Plans.

2. Coarse Aggregate

   a. Use the size specified and approved for prestressed concrete products.

   b. Do not use unconsolidated limerock coarse aggregate in prestressed concrete piling or in any structure that has direct contact with water.

3. Microsilica (Silica Fume)

   The Department may approve silica fume as an additive to concrete. If approved, add the silica fume at a rate not to exceed 10 percent of the cement content.

4. Epoxy-coated Reinforcement Steel and Wire:

   If top steel mat of the bridge deck is epoxy-coated, the shear steel in the prestressed concrete beams will be epoxy-coated in accordance with Section 514.

5. Welded Wire Fabric

   Use welded wire fabric that meets the following requirements:

   a. Use smooth wire fabric that meets the material requirements of AASHTO M 55 (ASTM A 185) and this Section.

   b. Use deformed wire fabric that meets the requirements of AASHTO M 221 (ASTM A 497) and this Section.

6. Pretensioning Steel Wire Strand

   Use strands that meet all the requirements of ASTM A 416, Grade 270.

7. Slump Limitation

   Ensure the slump meets Subsection 500.1.03.A Table 1 – Concrete Mix Table , except when Type F high range water reducers (HRWR) are added. With HRWR, you may increase the slump value from 4 in to 6 in (100 mm to 150 mm) with a maximum slump value not to exceed 7 in (175 mm), provided the concrete mix does not segregate.

8. Facilities and Equipment Plans

   Facilities are approved according to Laboratory SOP-3, Standard Operating Procedures for Precast/Prestressed Concrete. See QPL 9 for a list of approved facilities.

   Submit a complete set of plans and an itemized equipment list of the prestressing facilities to the Engineer.

   a. For established plants already approved by the Department, the Department will send a written notice about approval. The plant need not comply with the requirements concerning Plans and equipment listing.

   b. The Department may withdraw the waiver at its discretion if the plant changes the facilities, equipment, production methods, types of products, or for any other reason.

B. Fabrication

1. General Plant Requirements

   Furnish erection drawings to the Engineer that show the placement of superstructure units, especially when the units are not interchangeable with respect to transverse placement within a span or with respect to the reversal of ends within a span.

2. Manufacturing Facilities and Equipment

   Ensure that the prestressed concrete bridge members are made at a plant that has as a minimum the facilities and equipment specified as follows:

   a. Do not start manufacturing until the Engineer approves the facilities and equipment.

NOTE: Regardless of approval, the Contractor is responsible for the facilities' performance and obtaining additional equipment as needed.

   b. Beds: Construct beds for casting prestressed concrete of concrete; these shall be level or on a grade acceptable to the Engineer.

   c. Anchorages: Design and construct anchorages so they will not yield under 150 percent of the maximum design load.

   d. Forms: Construct steel side and bottom forms unless the Department allows other materials.

      1) Design the forms so the bridge members will be well within the tolerances specified in Subsection 865.2.01.B.11.

      2) Anchor the forms to prevent movement.

   e. Stressing Equipment

      1) Jacks: Use jacks in good repair that do not leak. Calibrate them with the actual gauge or gauges that you will be using. You may use pressure gauges, load cells, or dynamometers.

         Ensure all jack systems have devices that prevent the gauge pointer from fluctuating.

      2) Calibration: Calibrate all devices to a reading accuracy of 2 percent within the proposed stressing range.

         Use an approved testing laboratory to calibrate the devices. Have the laboratory furnish at least five copies of the calibration chart for each device to the Engineer.

         Recalibrate all stressing systems at least every 6 months and as required by the Engineer. Use gauges that you can read from 6 ft (1.8 m) and have a capacity of twice the maximum load.

   f. Elongation Measurement: Use a system approved by the Engineer and isolated from any movement in the bed or anchorages.

   g. Curing Systems Equipment: Use one of the curing methods listed below. Do not use curing compounds on prestressed concrete units unless the Engineer gives written permission.

      1) Water Curing: Use equipment that consists of a clean, non-deleterious water source, a method of application, and enough burlap or other means of moisture retention that will keep all surfaces of the concrete wet during the curing cycle, except those in contact with the forms.

      2) Steam Curing: Use the following minimum basic equipment:

         - An enclosure tight enough to maintain a uniform atmospheric temperature around the concrete units.
         - A steam system that distributes live steam uniformly through nozzles, capable of maintaining a temperature of at least 120 ºF (50 ºC) in all weather. Do not eject steam directly against concrete or forms.
         - A controlling device installed in the steam line that helps maintain a constant temperature.
         - A recording thermometer for each 200 ft (60 m) of bed length.

      3) Heated Forms: Uniformly heat the forms with a recirculating system that distributes the heat evenly. Use a system that includes:

         - A means of retaining moisture on concrete surfaces, except those in contact with the forms.

- A recording thermometer for each 200 ft (60 m) of bed length.
- A weathertight covering for each bed to ensure uniform heating throughout the bed.

h. Vibrators: Use internal vibrators with at least 4,500 impulses per minute. Ensure the vibrator heads are small enough to reach through the prestressing and reinforcing steel to all portions of the form.

1) Use enough vibrators to properly compact the concrete. Have an additional stand-by vibrator in good operating condition for each concrete placing operation.

2) Get the Engineer's approval of the vibration procedure and of the number and types of vibrators before pouring.

3) You may use external vibration in conjunction with internal vibration when the Engineer so approves.

i. Grout Pump: Use grout pumps that can pump the fluid grout and maintain a uniform pressure of 75 lbs/in² (520 kPa) for at least 15 seconds.

j. Storage Areas: Use plant storage areas that have surfaces capable of supporting the prestressed concrete bridge members without settlement. Ensure the storage area has blocks to support the units properly at the required points.

3. Substitution of Reinforcement

You may substitute welded wire fabric for the bar reinforcement shown on the Plans. The Department will not pay extra for the substitution.

The substitution is subject to the following:

a. Design Notes: Submit detailed shop drawings and design notes, including any changes, to the Engineer for approval before using welded wire fabric.

b. Indicate on the design notes that the welded wire fabric will provide the same or greater strength as that provided by the bar reinforcing shown on the Plans.

c. Design fabric use according to the latest AASHTO Specification for Highway Bridges. Prepare the drawings on 22 x 36-in (550 x 990 mm) sheets.

d. Have an Engineer registered in the State of Georgia stamp both drawings and notes.

e. Design the yield strength for the wire fabric not to exceed 60,000 psi (415 MPa) but not be less than 40,000 psi (275 MPa). Do not splice by welding or mechanical coupling.

f. If using welded wire fabric for stirrups of bar reinforcement, embed the wires perpendicular to the axis of the beam at least 6 in (150 mm) into the slab. Leave at most a clearance of 4 in (100 mm) from the top of slab to the welded wire fabric.

g. Embed at least two cross wires (wires parallel to the longitudinal axis of the beam) in the slab, with the closer cross wire clearing the top of the beam by at least 2 in (50 mm).

h. You may use welded wire fabric in the anchorage zone at the ends of the beam to replace the stirrups that enclose the prestressing steel in the bottom flange, and the vertical stirrups that do not protrude beyond the top of the beam.

i. Ensure that the wires perpendicular to the longitudinal axis of the beam have the same steel area as that of the bar reinforcing.

j. Use either smooth or deformed wires for welded wire fabric. Use the AASHTO Specification for Highway Bridges for the proper methods to embed and splice the fabric.

4. Substitution of Strands

You may use strands of different arrangement, size, or arrangement and size. The Department will not pay extra for the substitution.

The substitution is subject to the following structural and physical requirements:

a. Ensure that the net prestressed force of the strands after losses equals that shown on the Plans.

b. Ensure that the ultimate strength of the member meets the applicable requirements of AASHTO Specification for Highway Bridges.

c. Ensure that the eccentricity pattern of the substituted strands is about the same as the pattern shown on the Plans.

d. Before substituting strands, submit to the Engineer all changes and detailed shop drawings, with design notes. Ensure that the design notes indicate compliance with the requirements. Prepare drawings on 22 x 36-in (550 x 900 mm) sheets.

NOTE: If you propose to use strands that differ in size from those covered in ASTM A 416, submit complete data on the strands to the Engineer for approval.

Do not use individual strand couplings.

e. Have an Engineer registered in the State of Georgia stamp both drawings and notes.

5. Concrete Manufacture and Mixing
   a. Manufacture and place concrete according to the requirements of Section 500.
   b. Mix the concrete according to Subsection 500.3.04.E and Subsection 500.3.02.D.2 except when adding HRWR.
      1) When adding HRWR, dose the HRWR at the casting yard under the direct supervision of the producer's Quality Control. Do not exceed the HRWR manufacturer's recommended dosage.
      2) After dosing, mix the concrete at mixing speed for at least 70 revolutions.

NOTE: Do not exceed 360 total revolutions at mixing and agitating speeds.

      3) After adding the plasticizer, no additional mixing water will be permitted.

6. Concrete Pouring

   Fabricate the ends of all beams and girders to be vertical in the final erected position,.
   a. Rough-float the tops of beams at approximately the initial set.
   b. All nominal lengths shown on the plans are horizontal dimensions.
   c. Ensure that the Fabricator adjusts the lengths, as necessary, to account for the final erected position of the member.
   d. Slope bearing assemblies to accommodate the erected position of the member.

7. Methods of Prestressing

   You may either pretension, post-tension, or combine these methods to prestress concrete bridge members.
   a. Pretensioning: You may pretension with either the single-strand or the multi-strand jacking method.

NOTE: Do not use strands from more than one source in any one tensioning operation.

      Ensure the method used meets these requirements:
      1) Strand Splices: Get approval from the Engineer for splicing methods and devices.

Jacking Method	Action
Single-strand	Use only one splice per strand.
Multi-strand	Splice all strands or no more than 10% of the strands.

      Ensure that the spliced strands have similar physical properties, are from the same source, and have the same "twist" or "lay." Locate splices outside the prestressed units.
      2) Wire Failures: The Engineer may accept wire failures if the area of broken wires does not exceed 2 percent of the total area of the strands.
      3) Stressing Preparations: Prepare the members as follows:
         a) Carefully place and thread all strands in the bed.
         b) Avoid contaminating the strand with oil, grease, or other bond breaking material. If any strand is contaminated, clean the strand with a suitable solvent or replace the strand.

c) After final stressing, position all strands within the location tolerances specified in Subsection 865.2.01.B.11.

d) Use strand vises designed for the size of pretensioning strand to anchor the strand.

e) After anchoring, ensure that the vises sustain the pretensioning force without slipping until the release of stress. Ensure that the vise grips seat no more than 1/4 in (6 mm) each.

f) To prevent strands from bonding together, encase the strand in a conduit that can resist the pressure exerted by the concrete.

g) Use conduit with an ID allowing free movement of the encased strand, but no greater than the diameter of the strand plus 1/8 in (3 mm).

h) Secure the conduit to prevent both longitudinal movement along the strand and bonding at the location shown on the Plans, ± 1 in (25 mm).

i) Tape the conduit to keep concrete out. Use tape and conduit manufactured from a non-corrosive material compatible with both the concrete and steel. Do not debond the strand for the full length of members.

4) Pretensioning Operation: Use elongation to control this operation. Ensure that the hydraulic pressure gauge readings at the time of the measured net elongation are within 5 percent of the calculated gauge reading for that particular elongation.

Ensure that the net elongation and final gauge measurements agree within ± 5 percent of their computed theoretical values.

The measurements of force and elongation shall algebraically agree with each other within a 5% tolerance.

If any measurement varies by more than 5 percent, the Department will stop all work. Correct the defect before proceeding.

Pretension the members as follows:

a) Initial Tension: After threading the strand in the bed, apply an initial tensioning force to each strand.

Do not use elongation to measure the amount of initial tension, but use a dynamometer, hydraulic jack gauge, or dead weight.

b) Final Tension: Calculate the final stress from the final elongation measured between established reference points. Use points that are independent of any movement in the bed or anchorages that might occur during the pretensioning operation.

Calculate the design elongation as follows:

$D = \frac{PL}{AE}$ where

D = Design elongation in inches (millimeters).

P = Tensioning force, in pounds (kilonewtons); subtract the initial tensioning force from P.

L = Distance from dead end anchorage to reference point, measured in inches (millimeters)

A = Cross-sectional area of strand, in square inches (millimeters).

E = Modulus of elasticity of strand, in pounds per square inch (MPa).

c) Add correction factors to the design elongation for strand anchorage slip and temperature. Correct any movement in the anchorage abutments or in the overall anchorage system. Use the final elongation figure as the net elongation in jacking the strand.

d) Single-Strand Jacking: Do not let the jack ram rotate more than one revolution while stressing any strand.

e) Draped Strand Jacking: Partially jack draped strands from the end of the bed to add tension. Raise or lower the strands to their final position to get the final tension.

Ensure that the strands have no more than four points where the strand changes slope, two of which shall be at each anchorage.

Use approved, low friction devices at pick-up and hold-down points. Make the devices maintain the desired vertical and horizontal positioning of the strand.

After partial jacking, deflect the strands to their final position in a sequence approved by the Engineer.

f) Final Readings: After final stressing, position all strands within the location tolerances specified in Subsection 865.2.01.B.11.

g) Calculate the final elongation according to Subsection 865.2.01.B.7.a.4).b).

Uniformly distribute stress in the strands throughout the bed length.

5) Detensioning Operation: Before detensioning, submit the pattern and schedule for releasing the strands to the Engineer for advance approval.

Detension the members as follows:

a) Strip or loosen forms that tend to restrict the horizontal or vertical movement of the member prior to releasing the stress.

b) If curing with steam, carefully release the strand because of dimensional changes due to temperature and shrinkage changes. Where possible, release the pretensioned strand while the units are moist and warm.

c) In deflected strand construction, immediately release the hold down devices within the member or members after curing with steam.

6) Stress Release Strength: You may transfer stress to the concrete, unless otherwise specified on the Plans or in the Special Provisions, based on the following requirements (minimum strength determined by cylinders cast of the same concrete):

Section	Minimum Strength	Age
Concrete I-beams, box beams, flat slab deck sections, or tee slab deck sections	4500psi (30 MPa)	18 hrs
Piling	4000 psi (28 MPa)	
Other members	As specified on the Plans	

7) Strand Release: Use the following table for each type of strand:

Type of Strand	Release
Single strand	Heat each strand and allow it to pull itself apart in the sequence of the approved pattern and schedule of release. Do not cut the strands.
Multiple strand	Release either a symmetrical group of strands or all of the strands simultaneously. Remove the load on the strands from the anchorage and place it on the jacking system. Gradually release the jack or jacks until the strands are relaxed.
Draped strand	Release according to a method where the weight of the beam is compared with twice the total amount of the vertical components of the hold-down forces.*

*Use one of the following two methods:

Method	Release as follows:
Method I (beam weight less than twice the total amount and vertical restraints cannot counteract the vertical components of the hold-down forces)	Heat each draped strand at the end of each member to failure in the sequence of the approved pattern and schedule of release. Release hold-downs and remove hold-down bolts. Release straight strands as noted in Subsection 865.2.01.B.7.a.(7)
Method II (beam weight more than twice the total amount)	Release hold-down devices within the beam. Release the strands from the top to the bottom by either heating or jacking in the sequence of the approved pattern and schedule of release.

b. Post-tensioning: Use either the system required by the Plans or an approved alternate system. Alternate systems may include the post-tensioning of both straight and draped tendons. Ensure that the system meets the appropriate requirements that follow:

1) Tendons: Do not splice post-tensioning tendons.

2) Ducts: Accurately position the ducts in which post-tensioning tendons are placed and securely fasten them to prevent movement during concrete placement. Use flexible metal conduit, metal tubing, or other acceptable material for the ducts.

3) Stressing Requirements: Prepare the members as follows:

a) Carefully thread tendons into the ducts.

b) Avoid contaminating the strand with oil, grease, or other bond breaking material. If any strand is contaminated, clean the strand with a suitable solvent or replace the strand.

c) Follow the stressing procedures and sequences approved by the Engineer.

d) After stressing, anchor the tendons against the ends of the members and fill the ducts with grout.

4) Concrete Strength: Stress the post-tensioning tendons after the concrete in the member has reached the minimum strength and age requirements, as follows:

Minimum Strength	Age
4500 psi (30 MPa)	3 days
4000 psi (28 MPa)	5 days

c. Post-tensioning Operation: In general, tension straight tendons from one end. Simultaneously tension draped tendons from each end.

Pretension the members as follows:

1) Initial Tension: After threading the tendon in the duct, apply an initial tensioning force of up to 5 percent of the final tensioning force with a jack.

Determine the initial tension by reading the gauge. Do not use elongation to measure the amount of initial tension.

2) Final Tension: Compute the final stress on tendons from the amount of the final elongation measurement, checked by the jack pressure gauge reading.

3) Gauge Reading: Ensure that the pressure gauge reading at the time of the measured elongation is within 5 percent of the calculated gauge reading for that particular elongation.

If the gauge pressure reading varies by more than 5 percent from the calculated reading, stop the stressing operation and correct the defect before proceeding.

4) Jacking: While jacking draped tendons, ensure that jack pressures and elongations are kept as near equal as is possible at each of the two jacks so the elongation measurements and jack pressures remain proportional.

5) Anchor Devices: Design anchor devices that secure the tendon for the size of post-tensioning tendon used.

After anchoring, ensure that the devices can maintain a prestressed load of 150 percent of the maximum design load and do not slip more than 1/8 in (3 mm) after anchoring.

Place anchor devices exactly at right angles to the axes of the post-tensioned tendons. Carefully note anchorage losses and take the proper corrective measures to ensure that the tendon has the final design stress.

8. Grouting

a. Time Limitations: Complete all grouting within 48 hours after post-tensioning.

b. Grout: Make grout to a consistency of thick paint.

1) Mix, by volume, 1 part Portland cement, 0.75 part (max.) sand passing a No. 30 (600 µm) sieve, and 0.75 part (max.) water.

2) Within the limit specified, vary the proportions of sand and water as required by the Engineer.

3) If you need to fill enclosures as hereinafter specified, you may eliminate sand and use a neat cement grout in the mix.

4) After adding all ingredients, mix the batch for three minutes.

5) Make batches of grout small enough so that the batch may all be used up in less than 45 minutes.

6) Immediately before grouting, blow out tendon ducts with compressed air. Ensure that the compressed air does not contain oil.

7) Vent each duct at each end. Ensure the vent has the means for positive closure when subjected to a minimum pressure of 75 psi (515 kPa).

8) Pump the grout into the duct towards an exit vent.

9) After the grout has expelled all entrapped air and is flowing in a solid stream, close the exit vent and build the pumping pressure to a minimum of 75 psi (515 kPa). Hold it at that level for a minimum of 15 seconds.

10) Close the grout entrance vent.

11) Do not move or disturb the member at all for at least 48 hours after grouting.

9. Concrete Finish

a. Beams

1) Finish the outside face of certain exterior beams specified in the Table of ”Bridge Areas Requiring a Type III Finish” in Subsection 500.3.05.AB with the Type III Special Surface Coating Finish.

2) Finish all other beams with a steel form finish.

3) Score the surfaces of the top flanges of all beams with a stiff wire brush or equivalent. Score the beams transverse to the longitudinal axis of the beams.

4) Transversely scrub the entire beam top with a coarse brush to remove all laitance and to produce a roughened surface for bonding to the slab. Remove all concrete fins or projections to produce a vertical face at the edge of the beam.

5) If using prestressed concrete deck panels, finish both sides of the beam’s top flange with a trowel for 2 in (50 mm) from each panel edge to ensure a smooth and level bearing area.

b. Superstructure Deck Units: Finish the riding surface of superstructure deck units—flat slabs, channels, double tees, etc.—as specified in Subsection 500.3.05.T.9 and the Plans.

Finish the traffic face and top face of curbs on exterior units and the outside face of certain exterior beams as specified in the Table of ”Bridge Areas Requiring a Type III Finish” in Subsection 500.3.05.AB.

c. Substructure Units: Finish the top surfaces of caps and piling with the Type IV—Floated Surface Finish specified in Subsection 500.3.05.AB.5.

d. Patching: The Engineer will inspect all honeycombed areas. The Engineer may reject bridge members with extensive honeycombs within bearing areas.

1) Patch as directed by the Engineer, as soon as possible after form stripping.
2) The Engineer may require that you use an epoxy bonding compound.
3) Remove hold-down devices from the bottoms of the beams.
4) Coat the resulting holes with an epoxy bonding compound and plug them with grout.

10. Concrete Curing

Cure concrete with one of the methods listed below. Provide means for keeping the temperature of bridge members above the freezing point for 6 days after concrete placement, except for steam curing. The Department may reject bridge members based on improper curing.

a. Water Curing: Cover all concrete surfaces that are not in contact with the forms with wet burlap or other suitable material.

Keep the member wet for 7 days or until the concrete has reached the stress release strength specified in Subsection 865.2.01.B.7.a.(6).

b. Steam Curing: Do not begin steam curing for at least four hours after final placement of concrete.

1) The Engineer may delay the start longer if the concrete has not taken its initial set. You may use sufficient heat during the delay to maintain the temperature of the concrete between 50 º and 70 ºF (10 º and 21 ºC).
2) Ensure the steam curing enclosures retain moisture and heat.
3) After steaming begins, you may raise the enclosure temperature at a maximum rate of 80 ºF (27 ºC) per hour until the surface temperature of the concrete reaches an optimum temperature, not to exceed 190 ºF (88 ºC).
4) Ensure that the differential surface temperature of the concrete within a member does not exceed 40 ºF (4 ºC) during the curing period.
5) Continue steaming until reaching the stress release strength.
6) Lower the enclosure temperature at a maximum rate of 40 ºF (4 ºC) per hour.
7) Maintain a film of water on all exposed surfaces of the concrete during the steam curing cycle.
8) Do not exceed the maximum temperatures.
9) The Department may reject bridge members based on excessive temperature.

c. Heated Forms: When using approved heated forms, keep the exposed surfaces of the concrete wet at all times.

1) Enclose the beds with a suitable weather-tight covering supported to uniformly heat throughout the bed.
2) Apply the requirements stated in Subsection 865.2.01.B.10.b concerning the delay period, temperature control, curing duration, and basis of rejection.

11. Tolerances

a. Manufacture prestressed concrete bridge members within the dimensional tolerances listed in SOP-3, “Standard Operating Procedures for Precast/Prestressed Concrete”. These tolerances generally will be the maximum deviation allowed, although normal manufacturing tolerances will be well within those listed.

b. The Department may reject bridge members based on excessive deviations.

12. Galvanized Coatings

a. Before shipping beams, galvanize the exposed surfaces and edges of embedded structural steel bearing components and all exposed surfaces of attached structural steel bearing components according to ASTM A 123/ A 123M or A 153/ A 153M.

b. Touch up all areas to be welded after the welded area has cooled, and the weld is completed and cleaned.

c. Galvanize miscellaneous structural steel, hardware, bolts, and washers prior to storage at the casting yard or jobsite.

13. Marking

NOTE: This requirement does not apply to single point pick-up locations placed on piling.

a. With the exception of the Department's inspection stamp, the Contractor is responsible for the placement and accuracy of all markings on bridge members according to these Specifications.

b. The Inspector will not act for the manufacturer with respect to marking, but will cooperate with the plant personnel to ensure that the work is properly done with respect to time of marking, accuracy of description, and accuracy of location of marks and lettering.

c. Locate the markings so they are hidden after completing Project construction.

d. Do not ship any unit from the plant until it carries the official GDT stamp and number assigned by the Department to the Inspector at the plant, nor until the Inspector checks and approves the markings required by these Specifications.

e. Required Markings: Clearly mark bridge members to indicate the Project identification, date of manufacture, beam identification number (properly located to coordinate with the erection drawing), pile length, and location of pile single-point pick up.

f. Time of Marking

1) Before Stress Transfer: Immediately after forms are removed and before transferring stress, individually identify and date members. This helps keep accurate records on each member's bed location and date of concrete placement.

2) Before Shipping: Give the Inspector advance notice of shipping. After securing members for shipment, apply marking consisting of the Project identification to each member.

g. The Inspector will place the GDT stamp and number on each member. The Inspector will not use the GDT stamp until after the members have been satisfactorily finished and stored.

14. Handling and Storing

a. Prestressing Steel: Protect all prestressing steel from contact with dissimilar metals to prevent galvanic action and excessive rusting.

1) The Department will not consider light rust that does not visibly etch the steel as detrimental.

2) Keep prestressing steel free of harmful materials, such as grease, oil, wax, clay, dirt, paint, and loose rust.

3) Use special care to keep prestressing steel free of form oil and other bond-reducing material that may be used on the forms.

4) Handle prestressing steel at all times in such manner as to prevent kinks and nicks. The Department will not allow prestressing tendons that have kinks, nicks, bends, or other defects.

5) Do not use torches or welding equipment adjacent to tensioned strand unless the strand is insulated against heating or burning.

b. Reinforcement Steel: Handle, place, and support all reinforcement steel according to the requirements of Section 511.

c. Prestressed Concrete Bridge Members: Handle, store, and ship prestressed concrete bridge members in a way to eliminate the danger of cracks, fractures, and excessive bending stresses. Handle members by the two embedded pick-up points, unless the Engineer approves other methods.

1) Except for piling, handle members so their vertical axes remain plumb at all times.

2) Support members in storage on firm blocking located immediately below the two embedded pick up points. In multiple layer storage, support members in the stack with blocks of uniform thicknesses and in a vertical line.

3) Set all blocking at right angles to the longitudinal axis of the member, and the longitudinal axis of the blocking shall be horizontal. Do not ship members until the concrete reaches its ultimate design strength.

NOTE: Replace members that were damaged in handling or storage at no additional expense to the Department. However, the Engineer may determine that the damage is minor and may approve use of the member.

d. Piling: Handle, store, and ship piling after stress release.

1) The Department may reject any piling cracked in handling, storing, or loading if the crack warrants.

2) The Department will reject any cracked piling destined for locations involving sea water or alkali soils.
3) Mark rejected pile as rejected.
4) Store piling in groups with the same length.
5) Transport piling in a manner approved by the Engineer. Upon request, the Engineer will furnish drawings giving the limits of truck bolster spacing for various sizes and lengths of piling.

e. Beams: Handle or store fully pretensioned beams after stress release.

1) Use pick-up and support points within 3 ft (900 mm) of the beam ends.
2) Support beams on firm blocking located within 3 ft (900 mm) of the permanent bearing area of the beam.
3) You may handle or store fully post-tensioned beams 48 hours after the grout has been placed in the tendon ducts.
4) For beams manufactured by the combined method of pretensioning and post-tensioning, you may handle and store them after the pretensioning phase is completed. Do not handle again until 48 hours after grout placement.
5) Do not ship beams and other superstructure units until after their strength reaches the required minimum 28-day design strength.
6) Store beams in single layers, not in stacks. Support beams so they meet the following requirements concerning warp and sweep:

Twist of vertical axes of the ends of beams due to misalignment of blocking	The maximum deviation between the vertical axes of the ends of beams shall be 1/4 in/ft (20 mm/m) of beam height.
Tilt of vertical axis of an end of beam from the vertical due to deviation of blocking from the horizontal	The maximum deviation of the vertical axis of an end of a beam shall be 1/4 in/ft (20 mm/m) of beam height.
Lateral sweep due to manner of storage	There shall be no discernible sweep induced by the manner in which a beam is stored.

C. Acceptance

1. Plant Inspection

a. Give Notice to the Engineer: Give the Engineer ample notice before starting work so that the Engineer can inspect all plant facilities involved in the production. Do not manufacture anything until the Engineer approves all facilities.

b. Facilities for Inspection: Allow free access to the Inspector to all parts of the plant involved in the production process.

c. Inspector Authority: The Inspector has the authority to reject materials or quality of work that do not meet the Specifications. In cases of dispute, the Contractor may appeal to the Engineer, whose decision will be final.

2. Rejections

If any material or finished members are defective, they will be rejected, even though the Inspector may have accepted them.

a. Promptly replace rejected material or quality of work or make it good at your own expense.

3. Provisions for Testing

Furnish and maintain sufficient testing equipment so that the Inspector can conduct the following tests at the casting yard:

Material	Test Method
Fine Aggregate	AASHTO T 27
Coarse Aggregate	AASHTO T 27
Hardened Concrete	GDT 35

a. Hardened Concrete: Make cylindrical molds available for use on each casting bed.

b. Provide and maintain a machine and other accessories, such as capping molds, heating pots, and capping compound, sufficient to test compression specimens according to AASHTO T 22.

c. Furnish all testing materials, without cost to the Department, well in advance of the anticipated time of use. The Department will not compensate the Contractor if the work is delayed waiting for approval of the materials furnished for testing.

4. Facilities for the Inspector: Furnish for the sole use of the Inspector a suitable field laboratory according to Subsection 106.04, Subsection 106.11, and Subsection 152.

D. Materials Warranty

General Provisions 101 through 150.

Section 866—Precast Concrete Catch Basin, Drop Inlet, and Manhole Units

866.1 General Description

This section includes the requirements for manufacturing the following to the dimensions shown on the Plans:

- Precast reinforced concrete catch basins
- Drop inlets
- Manhole units

866.1.01 Related References

A. Standard Specifications

Section 500–Concrete Structures

Section 853–Reinforcement and Tensioning Steel

B. Referenced Documents

AASHTO M 199

AASHTO T 22

AASHTO T 24

SOP 19

QPL 4

QPL 86

866.2 Materials

The materials to be used shall meet AASHTO M 199 and the following requirements:

Material	Section
Concrete, Class AA-1, Vibrated, Air Entrained	500*
Reinforcement for Concrete	
Steel Bars	853.2.01
Steel Wire	853.2.06

Welded Steel Fabric	853.2.07
Macro-Synthetic Fibers	941
*Ensure that the concrete compressive strength is at least 4,000 psi (28 MPa). Do not use the gradation requirements.	

For a list of sources, see QPL 4.

866.2.01 Precast Concrete Catch Basin, Drop Inlet, and Manhole Units

A. Requirements

1. Reinforcement

   Follow the Plans, except as follows:

   a. Do not let steel reinforcement vary by more than 1/4 in (5 mm) from the position shown in the design, except at pipe connections.

   b. Ensure the cover on the steel reinforcement is not less than that shown on the Plans.

   c. Macro-synthetic fibers are permitted as reinforcement in lieu of steel reinforcement in precast manhole riser sections only. Approved fibers are listed on the Department's Qualified Products List 86 (QPL 86), entitled Macro-Synthetic Fibers for Concrete Reinforcement.

2. Ensure all precast concrete units are true to shape with smooth, dense, and uniform surfaces.

B. Fabrication

1. Casting

   a. Place the concrete in each unit without interruption.

   b. Consolidate the concrete with an approved vibrator and hand-tamping as necessary. Force the concrete into the corners of the forms to prevent stone pockets or cleavage planes.

2. Holes for Pipes

   Make each hole about 4 in (100 mm) larger than the outside diameter of the appropriate pipe.

3. Curing:

   Cure the units with one of the following methods until the minimum compressive strength has been achieved, or for 24 hours, whichever comes first.

   a. Method 1

      1) Place the units in a curing chamber, free from outside drafts, and cure them in a moist atmosphere not exceeding 160 °F (70 °C).

      2) Use steam injection for the time and temperature needed to obtain proper curing.

      3) Construct the curing chamber and place the units so that steam may fully circulate around the entire unit.

   b. Method 2

      1) Keep the units wet by covering the concrete not in contact with the forms with wet burlap or other suitable material.

      2) Protect the units from freezing between when you place the concrete until curing is complete.

4. Removing the Forms

   Leave the forms in place until you can remove them without damaging the unit.

5. Quality of Work

a. Correct minor surface cavities or irregularities that do not impair the service value of the unit by pointing with an approved mortar. Apply the mortar immediately after removing the forms.

b. Minor defects will not be cause for rejection.

C. Acceptance

1. Testing Facilities

   Ensure that the manufacturer furnishes facilities and assistance as required for the Inspector to sample and test quickly and efficiently.

NOTE: Check QPL 4 for pre-approved manufacturers that supply material compliant with this Specification.

2. The Department will accept the units based on the results of compressive tests on concrete cylinders and on inspection during manufacture. The tests will determine the unit's conformance with the design and quality of work prescribed in these Specifications and on the Plans.
3. The Department will accept any unit that meets the test requirements, regardless of age.
4. Rejection

   The Inspector will reject units if they fail to meet any requirements in this Specification, and for any of the following defects:

   Imperfect mixing and molding

   Honeycombed or open texture

   Exposure of the reinforcement that indicates the reinforcement is misplaced
5. Marking

   Ensure that each approved unit is marked with the name or trademark of the manufacturer and the date it was cast. The mark will be stenciled or otherwise placed on the inside of the unit so it is clearly legible at time of delivery.

   a. When approved by the Inspector, each unit will be stamped with the official mark of the Department or Certified Pipe Technician number (CPT).

   b. Accepted units or finished units will be rejected at any time if found to be defective.
6. Test as follows:

Test	Method
Compressive strength	AASHTO T 22 and AASHTO T 24

7. Compressive Strength Test

   The Inspector shall do the following:

   a. Make compression tests on cylinders to satisfy the minimum strength requirements.

   b. Make at least three cylinders from each day's pour and cure them in the same manner as the precast units.

D. Materials Warranty

1. Shipping

   Do not ship or transport any unit to the installation site unless it bears the required markings, stated in Subsection 866.2.01.C.5.

Section 867—Epoxy Coated Reinforcement Strips

867.1 General Description

Specifications for this work will be included elsewhere in the Contract.

Section 868—Bituminous Adhesive for Raised Pavement Markers

868.1 General Description

This section includes the requirements for bituminous hot-melt adhesive used to place raised pavement markers.

868.1.01 Related References

A. Standard Specifications

Section 106—Certification of Materials

B. Referenced Documents

AASHTO	ASTM	
T 48	C 430	D 1856
T 49	D 70	D 2669
T 53	D 1754	D 2712
T 202	D 1796	D 3407

868.2 Materials

868.2.01 Bituminous Adhesive

A. Requirements

1. Adhesive

   Use an adhesive made of asphaltic material and a homogeneously mixed filler that meets the following physical requirements:

   a. Adhesive Properties: Use the asphaltic material with filler.

	Min.	Max.	Test Method
Softening point	200° F (95 °C)	—	AASHTO T 53
Penetration, mm 3.5 oz (100 g), 5 sec., 77 °F (25 °C)	10	20	AASHTO T 49
Flow	—	0.2 in (5 mm)	ASTM D 3407 (modified in Subsection 868.2.01.C)
Viscosity, 400 °F (204 °C)	—	60 Poises (6.0 Pa-s)	ASTM D 2669 (modified in Subsection 868.2.01.C)
Flash point, C.O.C.	550 °F (285 °C)	—	AASHTO T 48

b. Asphalt Properties: Use the filler-free material derived from the extraction and Abson recovery process explained in Subsection 868.2.01.C.

	Min.	Max.	Test Method
Penetration, mm 3.5 oz (100 g), 5 sec., 77 °F (25 °C)	25	—	AASHTO T 49
Viscosity, 275 °F (135 °C)	12 Poises (1.2 Pa-s)	—	AASHTO T 202
Viscosity ratio, 275 °F (135 °C)	—	2.2	See Subsection 868.2.01.C

c. Filler Properties: Use the filler separation techniques described in Subsection 868.2.01.C.

	Min.	Max.	Test Method
Filler content, percent by weight	50	70	See Subsection 868.2.01.C
Filler fineness, percent passing			
No. 325 (45 µm)	75		ASTM C 430 (modified in Subsection 868.2.01.C)
No. 200 (75 µm)	95		
No. 100 (150 µm)	100		

d. Certification: Submit a certification from the manufacturer that includes the physical properties of the bituminous adhesives and that the material conforms with this Specification, as stated in Subsection 106.05, “Materials Certificate.”

2. Packaging and Labeling

a. Pack the adhesive in a self-releasing cardboard container of approximately 10 in (250 mm) that can be stacked properly.

b. Fill the containers with two 30 lb (13.5 kg) cubes that have a net weight of 60 lbs (27 kg).

c. Put the manufacturer, quantity, and batch number on the label.

d. Print “Bituminous Adhesive for Pavement Markers” on the label.

B. Fabrication

General Provisions 101 through 150.

C. Acceptance

1. Flow

Determine flow according to Section 6, Flow, of ASTM D 3407.

a. Set the oven temperature at 158 ° ± 2 °F (70 ° ± 1 °C).

b. Prepare samples according to Subsection 7.1 of AASHTO T 49.

2. Viscosity

Determine viscosity according to ASTM D 2669 using a spindle speed of 10 rpm.

a. Heat the adhesive to approximately 410 °F (210 °C) and then let cool.

b. Determine viscosity at 400 ° ± 1°F (204 ° ± 0.6 °C).

3. Asphalt Properties

Determine the base asphalt properties based on the material obtained from the following extraction and Abson recovery methods:

a. Extract the asphalt by heating the adhesive to the point where it will easily flow.

b. Add 125 to 150 g of adhesive to 400 mL of trichloroethylene that has a temperature of 125 ° to 150 °F (51 ° to 66 °C).

c. Stir the mixture to dissolve the asphalt.

d. Decant the trichloroethylene-asphalt mixture.

e. Recover the asphalt using the Abson recovery method described in ASTM D 1856, except do not use the extraction methods of ASTM D 2712, and do not filter the solvent-asphalt mixture.

f. Centrifuge the extraction solution of trichloroethylene and asphalt for at least 30 minutes at 770 times gravity in a batch centrifuge.

g. Decant the solution into a distillation flask. Do not include any filler sediment.

h. Apply heat and bubble carbon dioxide slowly until the solution reaches a temperature of 300 °F (149 °C).

i. Increase the carbon dioxide flow to between 800 to 900 mL per minute.

j. Maintain the decanted solution temperature between 320 ° and 335 °F (160 ° and 168 °C) with this carbon dioxide flow for at least 20 minutes and until the trichloroethylene vapors are completely removed from the distillation flask.

k. Repeat the extraction-recovery method as necessary to obtain the desired quantity of asphalt.

l. Determine penetration, 275 °F (135 °C) viscosity, and viscosity ratio with the recovered asphalt.

4. Viscosity Ratio

Determine the 275 °F (135 °C) viscosity ratio by comparing the 275 °F (135 °C) viscosity on the base asphalt before and after the Thin-Film Oven Test.

a. Perform the Thin-Film Oven Test as described in ASTM D 1754.

b. Determine the specific gravity with a pycnometer as described in ASTM D 70 for use in the Thin-Film Oven Test.

c. Calculate the 275 °F (135 °C) viscosity ratio by dividing the viscosity after the Thin-Film Oven Test by the original 275 °F (135 °C) viscosity.

5. Filler Material

Separate the filler material from the asphalt to determine filler content and filler fineness.

a. Filler Content

1) Determine the portion by weight of the adhesive that is insoluble in 1, 1, 1-trichloroethane by weighing 10.00 ± 0.01 g of solid adhesive into a centrifuge flask with a volume of approximately 100 mL, as specified in ASTM D 1796.

2) Add 50 mL of 1, 1, 1-trichloroethane to the adhesive.

3) Break the adhesive into small pieces to dissolve the solids.

4) Place the sample flask in a balanced centrifuge and spin with a minimum relative centrifugal force of 150 (as determined in Section 6 of ASTM D 1796) for 10 minutes.

5) Remove the sample flask and decant the solvent, without losing any solids.

6) Repeat the application of solvent and centrifuging until the solvent is clear and the filler is visually free of asphalt.

7) Dry the filler at 160 °, ± 5 °F (71°, ± 3 °C) to remove solvent and weigh the resulting filler.

8) Filter the decanted solvent to verify that no filler was lost.

9) Calculate the percent filler content as follows:

$$\text{Filler Content, \% by weight (g)} = \frac{\text{Filler Wt. (g)} \times 100}{\text{Original Adhesive Wt. (g)}}$$

b. Filler Fineness

1) Determine filler fineness according to ASTM C 430, using No. 325 (45 µm), No. 200 (75 µm), and No. 100 (150 µm) sieves.

2) Modify this method by using a water-soluble, non-ionic wetting agent, such as Triton X-100, to aid the wetting action. Use a surfactant solution that is approximately 1 percent by weight.

3) Thoroughly wet the 1-gram dry sample in the surfactant solution.

4) Soak the sample for 30 minutes.

5) Transfer the filler to the sieve cup.

6) Spray water on the filler for two minutes.

7) Add surfactant solution as needed and physically disperse clumped particles.

8) Dry the sample and handle as directed in ASTM C 430.

The Department will reject any bituminous adhesive if it meets all requirements of this Specification but fails in actual use.

D. Materials Warranty

General Provisions 101 through 150.

Section 870—Paint

870.1 General Description

This section includes the requirements for all paints, including pigments, vehicles, and the compositions of prepared paints for all purposes specified.

870.1.01 Related References

A. Standard Specifications

General Provisions 101 through 150

B. Referenced Documents

QPL 46

QPL 73

SOP 14

AASHTO M 69

Military Specifications MIL-E-698 B

MIL-P-23236 or US Corps of Engineers Specification C-200

Federal Test Methods, Standard No. 141

Federal Specifications		ASTM			
TT-E-489	TT-P-791a	D 209	D 476	D 768	D 3021
TT-P-103b	TT-P-1952E	D 211	D 600	D 822	D 3721
TT-P-104b	TT-R-266	D 234	D 602	D 1199	D 4462
TT-P-320c	TT-T-291	D 235	D 604	D 1648	E 97
TT-P-460	TT-V-119	D 263	D 605	D 2805	G 23
		D 324	D 711		

870.2 Materials

A. Requirements

1. Ingredients

   The Engineer shall approve all paint ingredients. Mix the paints in the proportions specified in this section for each kind of paint. The formulas given represent the proportions by weight of the materials to be used.

2. Condition of Mixed Paints

   Ensure that mixed paints do not liver or curdle, and that the pigments remain in suspension to a reasonable degree satisfactory to the Engineer.

3. Filling and Packaging

   The manufacturer shall strain paints before filling the containers. The manufacturer also shall ship paints in strong, substantial containers (according to QPL 46and QPL 73) plainly marked with the paint name and number, color, volume, manufacturer name and address, date of manufacture, and the manufacturer's lot number on every package. The inspection stamp on the paint container will be evidence of approval.

   Traffic line paint manufactured for the Department shall be delivered in 55 gallon (208 L) drums or 250 gallon (946 L) totes. The manufacturer shall stencil on the head of each drum the kind of paint, requisition number, purchase order number, and gross and net weights. Ensure that the drums are the removable head types. Ensure the totes are labeled appropriately.

4. Finished Paints

   Unless otherwise specified, deliver paints to the Project or the Department completely mixed and ready for use without adding oils or thinner. Use well ground paints that do not settle or badly cake in the container, and can readily be broken up to a smooth, uniform paint with good brushing consistency.

   When brushed or rolled on a smooth, vertical surface, the paint shall dry hard and elastic without running, streaking, sagging, or spotting. Use paint for spray application that sprays satisfactorily and does not run, sag, or streak.

   The first coat of paint applied in the shop or in the field to uncoated structural steel or wood is called the primer coat. The paint covering the primer coat is called the second coat, and the paint covering the second coat is called the third coat.

B. Fabrication

The formulas given in this specification represent proportions by weight.

C. Acceptance

1. Testing

   Test methods for paint analyses shall be according to the Federal Test Methods, Standard No. 141 or the ASTM standard methods of tests for paint.

2. Color

   Match color visually by comparing with standard color chips obtained from the Office of Materials and Research.

3. Inspection

Inspection and analysis will be made at the point of manufacture according to SOP 14. The manufacturer shall assist as necessary, permit the Inspector to test the ingredients before the paint is made, and witness the paint grinding.

The Department reserves the right to sample and test all paint at any time before it is used.

4. Tolerances

The Department will accept a tolerance of 1 percent of the required value for the paint formulation and property requirements.

EXCEPTION: This tolerance does not apply where maximum and minimum values are noted.

D. Materials Warranty

The following people shall furnish the Department a certificate of analysis and manufacturer's guarantee:

- The manufacturer of each brand of paint submitted for acceptance under these Specifications
- All Contractors proposing to use any paint specified in this Section

Ensure that the certificate of analysis shows the paint trade name to be furnished, including a facsimile of the label if the paint is ready-mixed, and an analysis showing the percentage of each of the chemical elements and compounds in the pigment and vehicle. The guarantee shall assert that all paint furnished conforms to the analysis shown on the certificate filed and to the statement of percentages of ingredients shown on the labels, which are required to be on each container. The guarantee shall be sworn to by a person having authority to bind the manufacturer into an agreement

870.2.01 Paints for Structural Steel

A. Requirements

1. Use structural steel paint that meets the applicable requirements of Subsection 870.2 and the following:

- No. 1A, Red Primer (see Table 1). Apply this paint with brush, roller, or airless spray.
- No. 1W, Waterborne Red Primer (see Table 2).
- No. 1 Z, Inorganic Zinc Rich Primer (See Table 3)
- No. 2A, Buff (see Table 4). Apply this paint with brush, roller, or airless spray.
- No. 2B, Aluminum (See Table 5 and Subsection 870.2.01.B, "Fabrication").
- No. 2W, Waterborne Intermediate Coat (see Table 6).
- No. 3A, Brown (see Table 7). Apply this paint with brush, roller, or airless spray.
- No. 3B, Green (see Table 8). Apply this paint with brush, roller, or airless spray.
- No. 3W, Waterborne Green (see Table 9).

Table 1—No. 1A, Red Primer, Brushing, Roller, or Airless Spray Type

Requirement	Maximum	Minimum
Paint Composition, percent by weight		
Pigment	—	53
Vehicle	47	—
Coarse Particles, total residue retained on No. 325 sieve, based on paint, percent by weight	1.0	—
Fineness of Grind, North Standard	—	4.5
Viscosity, Krebs Units	81	75

Requirement	Maximum	Minimum
Moisture Content, percent by weight	0.5	—
Drying Time, hours		
Set to touch	6	—
Dry through	18	—
Weight, lbs/gal (kg/L)	—	12.7 (1.52)
Pigment Composition, percent by weight		
Zinc Hydroxy Phosphite, ASTM D 4462	—	73
Red Iron Oxide ASTM D 3721	—	24
Organo Montmorillonite[1]	1.0	0.8
Vehicle Composition, percent by weight		
Non-Volatile[2]	—	66
Raw Linseed Oil, ASTM D 234		
Alkyd Resin Solution, Federal		
Specification TT-R-266, Type I,		
Class “A”		
Thinners and Driers	34	—
Thinners, Federal Specification		
TT-T-291		
Driers, ASTM D 600 Class “C”		
Notes: [1] Prewet Organo Montmorillonite with 20-30% (95%) methyl alcohol by weight. [2] Ensure that the non-volatile vehicle is composed of 1:1 proportions by weight of raw linseed oil and alkyd resin, respectively.		

Table 2—No. 1W, Waterborne Red Primer

Requirement	Maximum	Minimum
Paint Composition, percent by weight		
Pigment	—	24
Vehicle	76	—
Coarse Particles, total residue retained on 60 µm sieve, based on paint, percent by weight	0.5	—
Fineness of Grind, North Standard	—	4
Viscosity, Krebs Units	100	90
Drying Time, hours		
Set to touch	3	—
Dry through	24	—
Weight, lbs/gal (kg/L)	—	9.85 (1.18)

Requirement	Maximum	Minimum
Pigment Composition, percent by weight		
Red Iron Oxide	—	45
Zinc Phosphate	—	15
Vehicle Composition, percent by weight		
Non-Volatile Binder Solids, HG-54 or HG-56[1]	—	30
Methyl Carbitol	—	5
Texanol	—	2
Dibutyl Phthalate	—	2
Other Additives	5	—
NOTE: [1]or approved equivalent		

Table 3—No. 1Z, Inorganic Zinc Rich Primer

Requirement	Maximum	Minimum
Zinc dust, percent by weight		
Zinc	—	99.00
Lead	0.6	—
Percent by weight of zinc in dried paint film	—	85
Elcometer Adhesion of dried paints, psi (MPa)	—	300 (2.1)
Note: The primer shall be self-curing and shall consist of two components, Zinc dust and Ethyl Silicate vehicle. A manufacturer's product data sheet and a material safety data sheet (MSDS) shall accompany each shipment of Inorganic Zinc Rich Primer. The product data sheet shall contain the following information for the mixed primer: Unit Weight, Viscosity, Volatile Organic Content (VOC), Pot Life, Percent Solids by Volume.		

Table 4—No. 2A, Buff, Brushing, Roller, or Airless Spray Type

Requirement	Max.	Min.
Paint composition, percent by weight		
Pigment	—	52
Vehicle	48	—
Coarse particles, total residue retained on No. 325 (45 µm) sieve, based on paint, percent by weight	1.0	—
Fineness of grind, North Standard	—	4
Viscosity, Krebs units	82	75
Moisture content, percent by weight	0.5	—
Drying time, hours	18	—

Weight, lbs/gal (kg/L)	—	12.5 (1.50)
Color: Match the Department's Standard Color Chip		

Requirement	Max.	Min.
Pigment composition, percent by weight		
Zinc Hydroxy Phosphite, ASTM D 4462	—	75
Titanium Dioxide ASTM D 476 Type IV	—	19
Organo Montmorillonite—prewet with 20-30% (95%) methyl alcohol by weight	1.0	0.75
Tinting Pigments (may be added as predisperesed pigments): Yellow Oxide ASTM D 768, Red Iron Oxide ASTM D 3721, Lampblack ASTM D 209	3.5	3.0
Vehicle composition, percent by weight		
Non-Volatile, 1:1 proportions by weight, of: Raw Linseed Oil, ASTM D 234; Alkyd Resin Solution, Federal Specification TT-R-266, Type I, Class "A"	—	66
Thinners and Driers	34	—
Thinners, Federal Specification TT-T-291; Driers, ASTM D 600 Class "C"		
Note 1: For the greatest effectiveness, the Organo Montmorillonite should be prewetted with 20 – 30% (95%) methyl alcohol by weight.		
Note 2: The non-volatile vehicle shall be composed of 1:1 proportions by weight of raw linseed oil and alkyd resin, respectively.		

Table 5—No 2B, Aluminum

Requirement	Maximum	Minimum
Paint Composition		
Aluminum Paste, AASHTO M 69, lbs (kg)	—	2 (0.24)
Aluminum Vehicle, AASHTO M 69, gal (L)	1 (1)	—
Drying Time, hours		
Set to touch	8	2
Dry through	24	—
Note: Refer to Subsection 870.2.01.B, "Fabrication", for additional requirements.		

Table 6—No. 2W, Waterborne Intermediate Coat

Requirement	Maximum	Minimum
Pigment Composition, percent by weight		
Pigment	—	38
Vehicle	62	—
Coarse Particles, total residue retained on 60 µm sieve, based on paint, percent by weight	0.5	—
Fineness of Grind, North Standard	—	4
Viscosity, Krebs Units	100	90
Drying Time, hours		
Set to touch	3	—
Dry through	24	—
Weight, lbs/gal (kg/L)	—	11.0 (1.32)
Pigment Composition, percent by weight		
Zinc Phosphate	—	10
Calcium Carbonate	—	30
Magnesium Silicate ASTM D 605	12	—
Titanium Dioxide ASTM D 476 Type IV	—	40
Vehicle Composition, percent by weight		
Non-Volatile Binder Solid, HG-54 or HG-56[1]	—	30
Methyl Carbitol	—	5
Texanol	—	2
Dibutyl Phthalate	—	2
Other Additives	5	—
Notes: [1]or approved equivalent		

Table 7—No. 3A, Brown, Brush, Roller, or Airless Spray Type

Requirement	Maximum	Minimum.
Paint composition, percent by weight		
Pigment	47.0	45.0
Vehicle	55.0	53.0
Pigment composition, percent by weight		
Basic Lead Silico Chromate, ASTM D 1648	38.0	36.0
Red Iron Oxide—85%, ASTM D 3721	28.0	27.0
Titanium Dioxide, Rutile, Chalk Resistant, ASTM D 476, Type IV	16.5	15.5
Barium Sulfate, ASTM D 602	—	14.5
Organo Montmorillonite	—	0.6
Tinting Colors (Phthalocyanine blue, Lampblack, and Yellow Iron Oxide)	Remainder	
Requirement	**Maximum**	**Minimum.**
Vehicle composition, percent by weight		
Alkyd Resin, TT-R-266, Type I, Class A	—	57.0
Raw Linseed Oil, ASTM D 234	—	20.0
Mineral spirits, driers, antiskinning agents and methanol/water 95/5—prewet Organo Montmorillonite with 95/5 methanol/ water before adding to grind	23.0	—
Percent non-volatile vehicle	—	59.0
Color: Match Federal Standard Colors No. 595-30111		
Properties of finished paint		
Weight, lbs/gal (kg/L)	—	11.5 (1.38)
Viscosity, Krebs units	75	68
Fineness of grind, North Standard	—	4.0

Table 8—No. 3B, Green, Brushing, Roller, or Airless Spray Type

Requirement	Maximum	Minimum
Paint Composition, percent by weight		
Pigment	—	40
Vehicle	60	—
Coarse Particles, total residue retained on No. 325 sieve, based on paint, percent by weight	0.5	—
Fineness of Grind, North Standard	—	4
Viscosity, Krebs Units	85	75
Moisture Content, percent by weight	0.5	—
Drying Time, hours	8	—
Weight, lbs/gal (kg/L)	—	10.1(1.21)
Color: Shall match the Department's Standard Color Chip		
Pigment Composition, percent by weight		
Zinc Hydroxy Phosphite, ASTM D 4462	—	25
Titanium Dioxide, ASTM D 476, Type IV	—	2
Magnesium Silicate, ASTM D 605	45	40
Organo Montmorillonite[1]	1.5	1.2
Chromium Oxide, ASTM D 263	18	15
Pure Tinting Colors (No chrome green allowed)	Remainder	
Yellow Iron Oxide, ASTM D 768		
Red Iron Oxide, ASTM D 3721		
Lamp Black, ASTM D 209		
Phthalocyanine Green,[2] ASTM D 3021		
Vehicle Composition, percent by weight		
Non-Volatile	—	55
Alkyd Resin Solution, Federal Specification TT-R-266, Type I, Class "A"		
Thinners and Driers	45	—
Thinners, Federal Specifications, TT-T-291		
Driers, ASTM D 600 Class "C"		

NOTE: [1] Prewet Organo Montmorillonite with 20-30% (95%) methyl alcohol by weight.

[2] Chlorinated Copper Phthalocyanine, full strength, oil dispersable.

Table 9—No. 3W, Waterborne Green

Requirement	Maximum	Minimum
Paint Composition, percent by weight		
Pigment	—	15
Vehicle	85	—
Coarse Particles, total residue retained on 60 µm sieve, based on paint, percent by weight	0.5	—
Fineness of Grind, North Standard	—	4
Viscosity, Krebs Units	100	90
Drying time, hours		
Set to touch	3	—
Dry through	24	—
Weight, lbs/gal (kg/L)	—	9.35 (1.12)
Color: Shall match the Department's standard color chip		
Pigment Composition, percent by weight		
Zinc Phosphate	—	10
Titanium Dioxide, ASTM D 476, Type IV	—	5
Magnesium Silicate ASTM D 605	25	—
Calcium Carbonate	35	—
Pure Tinting Colors (No chrome green allowed)	Remainder	
Yellow Iron Oxide ASTM D 768		
Red Iron Oxide ASTM D 3721		
Lamp Black ASTM D 209		
Phthalocyanine Green ASTM D 3021		
Vehicle Composition, percent by weight		
Non-Volatile Binder Solids, HG-54 or HG-56[1]	—	30
Methyl Carbitol	—	5
Texanol	—	4
Other Additives	5	—
NOTE: [1]or approved equivalent		

B. Fabrication

1. No. 2B, Aluminum

   Prepare the aluminum paint by thoroughly mixing aluminum paste with mixing vehicle.

   a. Ensure the paints are well ground, do not settle or cake badly in the container, and are readily broken up to a smooth, uniform paint of good brushing consistency.

   b. Use 2 lbs (0.24 kg) of paste to 1.0 gal (1.0 L) of vehicle. Mix this at the factory.

c. Ensure a thorough mix with a minimum of stirring. Ensure that the paint shows satisfactory leafing qualities and solidly covers in one coat without running, streaking, or sagging.

d. If applying two coats of aluminum paint, tint the first coat with iron blue paste to help distinguish the two coats.

C. Acceptance

See Subsection 870.2.C.

D. Materials Warranty

See Subsection 870.2.D.

870.2.02 Traffic Line Paints

A. Requirements

Use traffic line paints that meet the applicable requirements of Subsection 870.2 and the following:

1. No. 4C, Black Traffic Line Paint
   a. Paint Composition: (See Table 10).
   b. Finished Paint:
      1) Flexibility: Ensure paint flexibility by following this procedure:
         a) Use a doctor blade or other suitable means to apply the paint to a 30-guage (0.39 mm) clean tin plate panel. Apply to a wet film thickness of approximately 2 mils (0.05 mm).
         b) Dry the panel in a horizontal position for 18 hours, and then bake it for 5 hours at 220 °F to 225 °F (105 °C to 110 °C).
         c) Cool the panel to approximately 77 °F (25 °C) and bend double over a ½ inch rod (13 mm rod). Ensure that the film does not show cracking or flaking upon bending or straightening.
      2) Color: Ensure that the paint dries to a pure, flat black and furnishes the maximum amount of opacity and visibility under both daylight and artificial light.

         Ensure that the paint does not discolor when exposed to weather or traffic and does not appreciably discolor with stains during service life on either concrete or bituminous surfaces.
      3) Weight per gallon (liter): Use paint weighing at least 14.0 lb/gal (67 kg/L) at 77 °F (25 °C).
      4) Consistency: The paint viscosity when measured at 77 ºF shall be 85 to 100 Krebs Units.
      5) Moisture content: The paint shall contain no more than 0.5% water.
      6) Drying**:** The paint shall dry to no pickup within 45 minutes when tested according to ASTM D 711.
      7) Spraying**:** The paint shall be factory-mixed ready for application through spray machines without using thinners.
      8) Storage**:** The paint shall not cake, liver, thicken, curdle, gel, or show other objectionable properties after storage for 6 months.
      9) Coarse particles and skins**:** The paint shall not contain more than 1.0 percent of coarse particles and skins.
      10) Fineness of Grind**:** The paint shall have a grind of 3 to 5 Hegman scale.
      11) Packaging**:** The finished paint shall be passed through a No. 40 mesh screen while filling the containers.

Table 10—No 4C, Black Traffic Line Paint

Requirement	Maximum	Minimum
Paint composition, percent by weight		
Pigment	43.0	41.0
Vehicle	59.0	57.0
Non-volatile vehicle, percent by weight of vehicle	—	42.0
Pigment composition, percent by weight		
Lamp Black, ASTM D 209	—	3.0
Calcium Carbonate, ASTM D 1199, Type GC (Note 1), Grade 1	34.0	32.0
Diatomaceous Silica, ASTM D 604, Type B	23.0	21.0
Magnesium Silicate, ASTM D 605	44.0	42.0
Organo Montmorillonite (Note 2)	0.8	0.3
Vehicle Composition, percent by weight		
Alkyd resin solution	—	70.0
Petroleum thinner, driers, and other additives	30.0	—
Alkyd Resin Solution Characteristics		
Type	Pure Drying Alkyd	
Type of oil	Soya, Linseed, or a mixture of the two	
Non-volatile, percent by weight	61	59
Volatile type	VM & P Naphtha	
Viscosity, Gardner-Holdt	Z^5	Z^3
Viscosity, at 45% solids	G	D
Color, Gardner—1953	10	3
Acid number, solids basis	8	—
Alkyd Resin Solution Characteristics,		
lbs/gal (kg/L) solution	7.75 (0.93)	7.66 (0.92)
Requirement	**Maximum**	**Minimum**
Modifying oil iodine number (Note 3)	—	115
Phthalic Anhydride, percent by weight of non-volatile	—	33
Oil Acids, percent	55	48
Compatibility	500% in VM & P Naphtha	
Resin and/or Derivatives	None	
Phenolic Resin Modifiers	None	

Notes for Table 10:

1. You may use the following chemical composition requirements for calcium carbonate in lieu of those for Type GC. However, all physical properties prescribed for Type GC, Grade 1, are required.

Requirement	Maximum	Minimum
Moisture and other volatile matter, percent by weight	0.2	—
Total Calcium and Magnesium Carbonates, percent by weight Magnesium Carbonate	— 3	95

2. Prewet Organo Montmorillonite with 20-30% (95%) methyl alcohol by weight.
3. Use modifying oil acids, isolated by Federal Test Method No. 141, Method 7031 that have an Iodine Number as specified in Table 870.8, Alkyd Resin Solution Characteristics.

2. No. 5A, Waterborne White Traffic Line Paint
   a. Paint Composition: (See Table 11).
   b. Finished Paint
      1) Flexibility: Apply the paint to a 30 gauge (0.39 mm), clean tin plate panel, to a wet film thickness of approximately 2 mils (0.05 mm). Use a doctor blade or other suitable means.
         a) Dry the panel horizontally for 18 hours.
         b) Bake the panel for 5 hours at 220 ° to 230 °F (105 ° to 110 °C).
         c) Cool the panel to about 77 °F (25 °C) and bend it double over a 1/2 in (13 mm) rod. Ensure that the film does not crack or flake when bent or straightened.
      2) Bleeding: Ensure that the paint does not bleed over a bituminous surface type used in Georgia.
      3) Color: Ensure that the paint dries to a pure, intense white and furnishes the maximum amount of opacity and visibility under both daylight and artificial light.

         Ensure that the paint does not discolor when exposed to weather or traffic and does not appreciably discolor with stains during service life on either concrete or bituminous surfaces.
      4) Consistency: Use paint with a viscosity of 80 - 100 Krebs units at 77 °F (25 °C).
      5) Drying: Ensure that the paint dries to no-pick-up within six minutes when tested according to ASTM D 711.

         Ensure that the paint dries through within 20 minutes when applied at 15 mils (0.38 mm) wet thickness at 77 °F (25 °C).
      6) Spraying: Mix the paint at the factory so it can be applied by spray machines without adding thinners.
      7) Storage: Ensure that the paint does not cake, liver, thicken, curdle, gel, or show any other objectionable properties after storage for six months.
      8) Coarse Particles and Skins: Ensure that the paint contains less than 1 percent of coarse particles and skins.
      9) Fineness of Grind: Ensure that the paint has a grind of 2 to 5 Hegman scale.
      10) Weight per gallon (liter): Use paint weighing at least 14.00 lb/gal. at 77 °F (1.68 kg/L at 25 °C).
      11) Packaging: Pass the finished paint through a No. 40 (425 µm) screen while filling the containers.
      12) Freeze-Thaw and Heat Stability: Ensure that the paint shows no coagulation, discoloration, or change in consistency greater than 10 Krebs units, when tested according to TT-P-1952E.
      13) pH: Ensure that the pH is greater than 9.5.

Table 11—No. 5A Waterborne White Traffic Line Paint

Requirement	Maximum	Minimum
Paint Composition, percent by weight		
Pigment	63.0	60.0
Vehicle	40.0	37.0
Non-Volatile Vehicle, percent by weight of vehicle	50.0	42.0
Pigment Composition, percent by weight		
Titanium Dioxide, ASTM D 476		
Type II, Rutile	—	13.0
Calcium Carbonate, ASTM A 1199		
Type GC Grade 1	87.0	—
Vehicle Composition, percent by weight		
Acrylic Emulsion E-2706 or DT211NA (50% NV)[1]	90.0	85.0
Methanol	3.0	1.0
Texanol Coalsecent	5.0	4.0
Other Additives	5.0	0.0
Propylene Glycol	—	3.0
NOTE: [1] Or approved equivalent		

3. No. 5B, Waterborne Yellow Traffic Line Paint
   a. Paint Composition: (See Table 12).
   b. Finished Paint:
      1) Flexibility: Apply the paint with a doctor blade to a 30 gauge (0.39 mm), clean tin plate panel, to a wet film thickness of approximately 2 mils (0.05 mm).
         a) Dry the panel horizontally for 18 hours.
         b) Bake the panel for 5 hours at 220 ° to 230 °F (105 ° to 110 °C).
         c) Cool the panel to about 77 °F (25 °C) and bend it double over a 1/2 in (13 mm) rod. Ensure that the film does not crack or flake when bent or straightened.
      2) Bleeding: Ensure that the paint does not bleed on any bituminous surface type used in Georgia.
      3) Color: Ensure that the paint dries to a bright yellow that matches color chip #33538 of Federal Color Standard #595B, within the limits of the Highway Yellow Color Tolerance Chart.

         Ensure that the paint does not discolor when exposed to weather or traffic and does not appreciably discolor from stains during service life on either concrete or bituminous surfaces.
      4) Consistency: Ensure a viscosity of 80 - 100 Krebs units at 77 °F (25 °C).
      5) Drying: Ensure that the paint dries to no-pick-up within 6 minutes when tested according to ASTM D 711.

         Ensure that the paint dries through within 20 minutes when applied at 15 mils (0.38 mm) wet thickness at 77 °F (25 °C).
      6) Spraying: Mix the paint at the factory so it can be applied by spray machines without adding thinners.

7) Storage: Ensure that the paint does not cake, liver, thicken, curdle, gel, or show any other objectionable properties after storage for 6 months.
8) Coarse Particles and Skins: Ensure that the paint contains less than 1 percent of coarse particles and skins.
9) Fineness of Grind: Ensure that the paint has a grind of 3 to 5 Hegman scale.
10) Weight per gallon (liter): Use paint weighing at least 13 lb/gal (1.56 kg/L) at 77 °F (25 °C).
11) Packaging: Pass the finished paint through a No. 40 (425 µm) screen while filling the containers.
12) Freeze-Thaw and Heat Stability: Ensure that the paint shows no coagulation, discoloration, or change in consistency greater than 10 Krebs units, when tested according to TT-P-1952E.
13) pH: Ensure that the pH is greater than 9.5.

Table 12—No. 5B, Waterborne Yellow Traffic Line Paint

Requirement	Maximum	Minimum
Paint Composition, percent by weight		
Pigment	63.0	60.0
Vehicle	40.0	37.0
Non-Volatile Vehicle, percent by weight of vehicle	50.0	42.0
Pigment Composition, percent by weight		
Titanium Dioxide, ASTM D 476 Type II, Rutile	—	4.0
Lead-free organic yellow No. 65	—	5.0
Calcium Carbonate, ASTM D 1199 Type GC Grade 1	91.0	—
Vehicle Composition, percent by weight		
Acrylic Emulsion E-2706 or DT211NA (50% NV)[1]	90.0	85.0
Methanol	3.0	1.0
Texanol Coalsecent	5.0	4.0
Other Additives	5.0	—
Propylene Glycol	—	3.0
NOTE: [1]or approved equivalent		

4. No. 6A, Waterborne High Build White Traffic Line Paint
   a. Paint Composition: (See Table 13).
   b. Finished Paint
      1) Flexibility: Apply the paint to a 30 gauge (0.39 mm), clean tin plate panel, to a wet film thickness of approximately 2 mils (0.05 mm). Use a doctor blade or other suitable means.
         a) Dry the panel horizontally for 18 hours.
         b) Bake the panel for 5 hours at 220 ° to 230 °F (105 ° to 110 °C).
         c) Cool the panel to about 77 °F (25 °C) and bend it double over a 1/2 in (13 mm) rod. Ensure that the film does not crack or flake when bent or straightened.
      2) Bleeding: Ensure that the paint does not bleed over a bituminous surface type used in Georgia.

3) Color: Ensure that the paint dries to a pure, intense white and furnishes the maximum amount of opacity and visibility under both daylight and artificial light.

   Ensure that the paint does not discolor when exposed to weather or traffic and does not appreciably discolor with stains during service life on either concrete or bituminous surfaces.

4) Consistency: Use paint with a viscosity of 80 - 100 Krebs units at 77 °F (25 °C).

5) Drying: Ensure that the paint dries to no-pick-up within six minutes when tested according to ASTM D 711.

   Ensure that the paint dries through within 20 minutes when applied at 25 mils (0.635 mm) wet thickness at 77 °F (25 °C).

6) Spraying: Mix the paint at the factory so it can be applied by spray machines without adding thinners.

7) Storage: Ensure that the paint does not cake, liver, thicken, curdle, gel, or show any other objectionable properties after storage for six months.

8) Coarse Particles and Skins: Ensure that the paint contains less than 1 percent of coarse particles and skins.

9) Fineness of Grind: Ensure that the paint has a grind of 2 to 5 Hegman scale.

10) Weight per gallon (liter): Use paint weighing at least 14.00 lb/gal. at 77 °F (1.68 kg/L at 25 °C).

11) Packaging: Pass the finished paint through a No. 40 (425 µm) screen while filling the containers.

12) Freeze-Thaw and Heat Stability: Ensure that the paint shows no coagulation, discoloration, or change in consistency greater than 10 Krebs units, when tested according to TT-P-1952E.

13) pH: Ensure that the pH is greater than 9.5.

Table 13—No. 6A Waterborne High Build White Traffic Line Paint

Requirement	Maximum	Minimum
Paint Composition, percent by weight		
Pigment	63.0	60.0
Vehicle	40.0	37.0
Non-Volatile Vehicle, percent by weight of vehicle	50.0	42.0
Pigment Composition, percent by weight		
Titanium Dioxide, ASTM D 476, Type II, Rutile	—	13.0
Calcium Carbonate, ASTM A 1199, Type GC Grade 1	87.0	—
Vehicle Composition, percent by weight		
Acrylic Emulsion meeting TT-P_1952E, Type III[1]	90.0	85.0
Methanol	3.0	1.0
Texanol Coalsecent	5.0	4.0
Other Additives	5.0	0.0
Propylene Glycol	—	3.0
NOTE: [1]or approved equivalent		

5. No. 6B, Waterborne Yellow High Build Traffic Line Paint

   a. Paint Composition: (See Table 14).

b. Finished Paint:

1) Flexibility: Apply the paint with a doctor blade to a 30 gauge (0.39 mm), clean tin plate panel, to a wet film thickness of approximately 2 mils (0.05 mm).

   a.) Dry the panel horizontally for 18 hours.

   b.) Bake the panel for 5 hours at 220 ° to 230 °F (105 ° to 110 °C).

   c.) Cool the panel to about 77 °F (25 °C) and bend it double over a 1/2 in (13 mm) rod. Ensure that the film does not crack or flake when bent or straightened.

2) Bleeding: Ensure that the paint does not bleed on any bituminous surface type used in Georgia.

3) Color: Ensure that the paint dries to a bright yellow that matches color chip #33538 of Federal Color Standard #595B, within the limits of the Highway Yellow Color Tolerance Chart.

   Ensure that the paint does not discolor when exposed to weather or traffic and does not appreciably discolor from stains during service life on either concrete or bituminous surfaces.

4) Consistency: Ensure a viscosity of 80 - 100 Krebs units at 77 °F (25 °C).

5) Drying: Ensure that the paint dries to no-pick-up within 6 minutes when tested according to ASTM D 711.

   Ensure that the paint dries through within 20 minutes when applied at 25 mils (0.635 mm) wet thickness at 77 °F (25 °C).

6) Spraying: Mix the paint at the factory so it can be applied by spray machines without adding thinners.

7) Storage: Ensure that the paint does not cake, liver, thicken, curdle, gel, or show any other objectionable properties after storage for 6 months.

8) Coarse Particles and Skins: Ensure that the paint contains less than 1 percent of coarse particles and skins.

9) Fineness of Grind: Ensure that the paint has a grind of 3 to 5 Hegman scale.

10) Weight per gallon (liter): Use paint weighing at least 13 lb/gal (1.56 kg/L) at 77 °F (25 °C).

11) Packaging: Pass the finished paint through a No. 40 (425 µm) screen while filling the containers.

12) Freeze-Thaw and Heat Stability: Ensure that the paint shows no coagulation, discoloration, or change in consistency greater than 10 Krebs units, when tested according to TT-P-1952E.

13) pH: Ensure that the pH is greater than 9.5.

Table 14—No. 6B, Waterborne High Build Yellow Traffic Line Paint

Requirement	Maximum	Minimum
Paint Composition, percent by weight		
Pigment	63.0	60.0
Vehicle	40.0	37.0
Non-Volatile Vehicle, percent by weight of vehicle	50.0	42.0
Pigment Composition, percent by weight		
Titanium Dioxide, ASTM D 476 Type II, Rutile	—	4.0
Lead-free organic yellow No. 65	—	5.0
Calcium Carbonate, ASTM D 1199 Type GC Grade 1	91.0	—
Vehicle Composition, percent by weight		

Requirement	Maximum	Minimum
Acrylic Emulsion meeting TT-P-1952E, Type III[1]	90.0	85.0
Methanol	3.0	1.0
Texanol Coalsecent	5.0	4.0
Other Additives	5.0	—
Propylene Glycol	—	3.0
NOTE: [1]or approved equivalent		

B. Fabrication

See Subsection 870.2.B.

C. Acceptance

See Subsection 870.2.C.

D. Materials Warranty

See Subsection 870.2.D.

870.2.03 Sign Enamel

A. Requirements

1. Ensure that sign enamels, either baking or air-drying, except black, meet the requirements of Federal Specifications TT-E-489 and Subsection 870.2.
2. Use the identified class shown in Table 15 for the respective types. Also, ensure that each color matches Federal Standard 595A as designated.

Table 15—Sign Enamel Federal Specification Requirements

	Fed. Stand. No. 595 A	Fed. Spec. TT-E-489e	
Color	**Number**	**Class**	**Type**
Yellow	13538	B	Baking
		A	Air drying
White	17875	B	Baking
		A	Air drying
Red	11105	B	Baking
		A	Air drying
Blue	15090	B	Baking
		A	Air drying
Green	14109	B	Baking
		A	Air drying

3. For a black sign enamel, use a semi-gloss enamel that matches Federal Standard Number 595 A, Color 27038 and meets the requirements of Military Specifications MIL-E-698 B and Subsection 870.2.

B. Fabrication

Prepare the surface and use a primer recommended by the manufacturer of the sign enamel.

C. Acceptance

See Subsection 870.2.C.

D. Materials Warranty

See Subsection 870.2.D.

870.2.04 Paint for Timber

A. Requirements

Ensure that paints for timber meet the requirements of Subsection 870.2 and Federal Specification TT-P-104b, unless otherwise specified.

1. If lead-free, fume-resistant paint is specified, ensure that it meets the requirements of Federal Specification TT-P-103b.
2. If chalking is a specified requirement, ensure that the paint meets Federal Specification TT-T-103b modified to require that the percentage of anatase be equal to that specified in TT-P-103b for both rutile and anatase.

B. Fabrication

See Subsection 870.2.B.

C. Acceptance

See Subsection 870.2.C.

D. Materials Warranty

See Subsection 870.2.D.

870.2.05 Miscellaneous Paints

A. Requirements

1. Paint for Steel Piling and Sway Bracing

   Use paint for steel piling and sway bracing that meets the requirements of Subsection 870.2 and the following:

   a. No. 1P, General: Ensure that materials used as a primer and/or finish coat are formulated from either a coal tar pitch or a native pyrobitumen resin. You may use other types of material if they meet the requirements in Table 16, below.

Table 16—Primer/Finish Coat Requirements

Properties	Requirements
Color	Black
Odor	Ensure coal tar materials have no pyridine, pyridine base, or tar acid odor.
Consistency	Easily applied by brush or spray to a coverage of 60 ft^2/gal (1.5 m^2/L), without sagging, yielding film thicknesses of about 26 mils (0.66 mm) wet and 13 mils (0.33 mm) dry.
Drying time	Apply at a rate of 60 ft^2/gal (1.5 m^2/L). Ensure that the material dries to a firm film within 24 hours at 70 ° - 80 °F (21 °- 27 °C) and can receive a second coat.

Properties	Requirements
Chemical resistance	Ensure that the material remains intact and in good condition when immersed for 30 days in each of the following inorganic acids, alkalies, and salts: • 5% sulfuric acid • 5% hydrochloric acid • 2% phosphoric acid • 5% sodium hydroxide • 25% sodium chloride • 25% calcium chloride

1) Durability: Before initially accepting a product to be supplied under this Specification, the complete system—from primer, when required, to finish coat(s)—shall be subjected to accelerated weathering and atmospheric exposure tests according to ASTM D 822 and ASTM G 23, Type D.
2) Ensure that the system remains intact without cracking, and prevents significant steel corrosion for at least 1,500 hours exposure in the accelerated weathering test, and 5 years atmospheric exposure in a coastal environment.
3) The State Materials Engineer may approve systems that perform satisfactorily for up to 3,000 hours of accelerated weathering pending completion of the 5-year atmospheric exposure tests.
4) After the Department initially accepts the material, you do not need to test each lot of material. However, the Department will conduct other durability tests at its discretion.

b. No. 2P, Special Provisions Coating: Use special protective coatings instead of any other coating required by the Specifications for steel-H piling, steel sway bracing, metal shells for cast-in-place concrete piling, or prestressed concrete piling in all intermediate bents of the cap and pile trestle-type.
1) Get approval from the Laboratory for the protective coating material.
2) Use a two-component, chemically cured, coal-tar epoxy that meets the requirements of either Type I, Class 2, Military Specification MIL-P-23236 (Ships) or U.S. Corps of Engineers Specification C-200.
3) Ensure that the coating exhibits optimum chemical and physical resistance to alkalies and mineral acids under continuous immersion service.
4) Ensure that the cured coating withstands considerable physical abuse such as direct impact, abrasion, and flexing.
5) Furnish a written certification to the Engineer that the material meets the requirements of these Specifications.

2. Galvanizing Repair Compound

Use a compound that meets the general requirements of Subsection 870.2 and Table 17.

Table 17—Galvanizing Repair Compound Requirements

	Maximum	Minimum
Paint Composition, percent by weight		
Pigment	77	73
Vehicle	27	23
Pigment Composition, percent by weight		
Zinc dust, Federal Specification TT-P-460	99	95

	Maximum	Minimum
Dust (Metallic Zinc Powder), Type 1 Lead Suboxide Stabilizer	0.15	—
Suspending Agent	1.85	—
Vehicle Composition, percent by weight		
Non-Volatile Vehicle	—	18
Volatile Vehicle	82	—

a. Non-volatile Vehicle: Use chlorinated rubber and a suitable plasticizer for the non-volatile portion of the vehicle. Ensure that the chlorine content, based on the non-volatile vehicle, is at least 60 percent by weight.

b. Volatile Vehicle: Use a volatile vehicle that is completely compatible with the other ingredients of the finished product. Ensure that the vehicle meets all the physical and chemical requirements of the end product.

c. Finished Compound: Ensure that the finished compound meets the requirements of Table 18.

Table 18—Finished Compound Requirements

Characteristic	Requirement
Condition in the container	No pigment component of the ready-mixed compound settles. When the package remains unopened for one year, you can readily disperse the pigment by hand mixing. The vehicle does not liver, curdle, or show excessive bodying.
Application	The material to repair galvanizing and to galvanize welds in the field shall be such that when applied, there is no unusual difficulty in horizontal, vertical, or overhead positions.
Adhesion	Expose test panels coated according to field application specifications to weather for at least 3 months in a position 45 degrees vertical, facing south. After this time, ensure that the test panels show no visible signs of peeling or flaking.
Gassing	No build up of gas or excessive pressure in the container when stored at room temperature for 3 months.
Dry film thickness	The compound leaves a dry film between 2 - 2-1/2 mils (0.051 - 0.064 mm) thick, when applied according to field application specifications.
Drying time	The compound is set to touch in 30 minutes and is dry to recoat in 4 hours. The material is thoroughly hard within 48 hours after application.
Hardness	Dry and cure the test panels coated under these Specifications for at least 48 hours. Brush a section by hand with a wire brush. Continue brushing until you see bright metal. Measure the dry film thickness. Accept the material if the brushing does not reduce the film below the specified thickness.

Characteristic	Requirement
Consistency	Viscosity at 77 °F (25 °C) is 123 ± 7 Krebs units, as measured by the Stormer Viscometer.
Weight per lb (liter)	22 ± 10% lbs (2.64 ± 10% kg) at 77 °F (25 °C).
Packaging	Commercial paint packaging is acceptable for containers smaller than 1 gal (3.8 L). For 1 gal (3.8 L) packages, use No. 26 gauge steel pails. Do not pack more than 1 gal (3.8 L) of compound in a single container.
Storage	Store the compound where the temperature stays above 45 °F (7 °C).

3. Aluminum Caulking Compound

Use a compound that meets the requirements of Subsection 870.2, third bullet, and Table 19.

Table 19—Aluminum Caulking Compound Requirements

Properties	Max.	Min.
Compound composition, percent by weight		
Pigment	—	72
Vehicle	28	—
Pigment composition, percent by weight		
Calcium carbonate, ASTM D 1199, Type GC	—	72
Mineral filler	17	—
Aluminum paste, Federal Specification TT-P-320c, Type II, Class III	—	10
Titanium Dioxide ASTM D 476, Type II, Class II	—	1
Vehicle composition, percent by weight		
Non-volatile	—	78.5
Refined vegetable oil	—	54
Polybutene oil	—	24.5
Fatty acid	—	3.5
Thinner and drier	18	—
Color: aluminum		

a. Other Properties

Properties	Requirement
Consistency	Can be applied by hand caulking gun, knife, or trowel.
Adhesion	Good adhesion to any dry, dust-free, or oil-free surface.
Curing	A light film forms in 48 to 72 hours. A tough metallic film develops in 2 to 3 weeks.
Exposure	Good resistance to water and weather.

B. Fabrication

See Subsection 870.2.B.

C. Acceptance

See Subsection 870.2.C.

D. Materials Warranty

See Subsection 870.2.D.

870.2.06 Miscellaneous Paint Materials

A. Requirements

Use other paint materials that meet the following requirements:

1. Raw Linseed Oil: Use oil that meets the requirements of ASTM D 234.
2. Boiled Linseed Oil: Use oil that meets the requirements of ASTM D260.
3. Turpentine: Use turpentine that meets the requirements of ASTM D 13.
4. Mineral Spirits: Use petroleum spirits (mineral spirits) that meets the requirements of ASTM D 235.
5. Spar Varnish: Use Varnish, Spar Phenolic Resin, as per Federal Specification TT-V-119.
6. Tinting Pigment Paste: Use lampblack, venetian blue, or iron blue as tinting pigments.

The Engineer may approve other tinting pigments, subject to limitations.
Add all tinting pigments in paste form.

7. Putty: Use putty that meets the requirements of Federal Specifications TT-P-791a, Type II.

B. Fabrication

See Subsection 870.2.B.

C. Acceptance

See Subsection 870.2.C.

D. Materials Warranty

See Subsection 870.2.D.

Section 880—Water

880.1 General Description

This section includes the requirements for water used in Portland cement mixtures.

880.1.01 Related References

A. Standard Specifications

General Provisions 101 through 150.

B. Referenced Documents

AASHTO T 26

AASHTO T 71

ASTM C 403

GDT 26

880.2 Materials

880.2.01 Water for Portland Cement Mixtures

A. Requirements

1. Use water that is reasonably clear without oil, salt, acid, alkali, organic, and other injurious substances.
2. The Department may allow drinking water that is used for ordinary household use without testing it.
3. Do not use water from shallow, muddy, or marshy surfaces. Test and approve all other sources before using them.

4. When the source of water is relatively shallow, ensure that the source depth and intake exclude silt, mud, grass, and all other foreign material.
5. Do not use water with detergents that will entrain air in Portland cement concrete.
6. Do not use water with impurities above the following limits:

Impurity	Concentration
Acidity or alkalinity calculated in terms of calcium carbonate	0.05%
Total organic solids	0.05%
Total inorganic solids	0.05%
Sulfate (SO_4)	0.05%
Chloride	0.01%

B. Fabrication

General Provisions 101 through 150.

C. Acceptance

The Department will reject any water that, when compared with accepted water, shows any indication of unsoundness, marked change in time of set, or reduction of more than 10 percent in mortar strength.

Test as follows:

Test	Method
Quality of water, solids ppm	AASHTO T 26
Setting time of concrete mixtures	ASTM C 403
Mortar making properties	AASHTO T 71
Air content of concrete	GDT 26
SO_4 ppm, Alkalis, ppm	ASTM D 516
Cl, ppm	AASHTO T 260

D. Materials Warranty

General Provisions 101 through 150.

880.2.02 Recycled Wash Water

A. Requirements

Recycled Wash Water shall conform to AASHTO M 157 and meet the following requirements:

Chemical Designation	Limits	Test Method
SO_4, ppm	3000	ASTM D 516
Alkalis, ppm	600	ASTM D 516
Total Solids, ppm	50,000	AASHTO T 26
Cl, ppm	600	AASHTO T 260

B. Fabrication

General Provisions 101 through 150.

C. Acceptance

Conduct test methods according to the following:

Quality of Water, Solids,ppm	AASHTO: T26
Setting Time of Concrete Mixtures	ASTM: C 403
Mortar Making Properties	AASHTO: T 71
Air Content of Concrete	GDT: 26
SO_4, ppm, Alkalis, ppm	ASTM D 516
Cl, ppm	AASHTO T 260

Section 881—Fabrics

881.1 General Description

This section includes the requirements for the following fabrics:

- Plain cotton duck
- Rubber-impregnated cotton duck
- Burlap and cotton bags
- Plastic filter fabric
- Pavement reinforcement fabric
- Silt fence filter fabric

881.1.01 Related References

A. Standard Specifications

Section 106—Materials Certification

B. Referenced Documents

Federal Specification CCC-C 419 Type III

ASTM D 36

ASTM D 146

ASTM D 412

ASTM D 1777

ASTM D 3786

ASTM D 4355

ASTM D 4632, GRAB

ASTM D 4751

ASTM D 4833

GDT 87

GDT 88

GDT 95

QPL 28

QPL 36

QPL 40

QPL 47

881.2 Materials

881.2.01 Plain Cotton Duck

A. Requirements

1. Use plain cotton duck meeting the requirements of Federal Specification CCC-C 419 Type III.
2. Ensure the duck weighs at least 8 oz./yd² (270 g/m²).

B. Fabrication

General Provisions 101 through 150.

C. Acceptance

General Provisions 101 through 150.

D. Materials Warranty

General Provisions 101 through 150.

881.2.02 Rubber-Impregnated Cotton Duck

A. Requirements

1. Use preformed rubber-impregnated fabric pads made of multiple layers of 8 oz (270 g) cotton duck, impregnated and bound with high quality natural rubber, or made of equivalent materials compressed into resilient pads of uniform thickness.
2. Use enough plies to reach the specified thickness after compression and vulcanizing.
3. Ensure the finished pad withstands compression loads of not less than 10,000 psi (70 MPa) when applied perpendicular to the plane of the laminations. Ensure the pad does not extrude or harmfully reduce in thickness.

B. Fabrication

General Provisions 101 through 150.

C. Acceptance

General Provisions 101 through 150.

D. Materials Warranty

General Provisions 101 through 150.

881.2.03 Burlap Bags

A. Requirements

1. Use burlap bags made of at least 95 percent jute and manila fibers.
2. Use burlap weighing 8 to 18 oz/10 ft^2 (250 to 550 g/m^2).
3. Use bags with a capacity of 1 to 2 ft^3 (0.03 to 0.06 m^3).

B. Fabrication

General Provisions 101 through 150.

C. Acceptance

General Provisions 101 through 150.

D. Materials Warranty

General Provisions 101 through 150.

881.2.04 Cotton Bags

A. Requirements

1. Use cotton bags with Osnaburg 40 x 26 thread count and a nominal fabric weight of 6.8 oz/yd^2 (230 g/m^2).
2. Use bags having 1/2 in (13 mm) sewn seams with at least 1 stitch per 1/5 in (5 mm).
3. Use 4 or 5 ply, 12 cotton yarn or equivalent for the stitches.
4. Ensure seam efficiency is at least 80 percent. Ensure the inside measurements tolerance is ± 1/2 in (13 mm).

B. Fabrication

General Provisions 101 through 150.

C. Acceptance

General Provisions 101 through 150.

D. Materials Warranty

General Provisions 101 through 150.

881.2.05 Plastic Filter Fabric

A. Requirements

1. Use pervious sheets of plastic yarn made from a long-chain synthetic polymer. Use polymer composes of at least 85 percent by weight of propylene, ethylene, amide, ester, or vinylidene chloride.

   Use a sheet of plastic yarn containing stabilizers and/or inhibitors added to the base plastic to make the filaments resistant to deterioration due to ultra-violet and/or heat exposure.
2. Ensure the fabric is finished so that the filaments will retain their relative position with respect to each other.
3. Use fabric without defects, rips, holes, or flaws.
4. Use fabric meeting the following physical requirements for woven and non-woven fabric:

Woven Fabrics	
Tensile strength (any direction)	200 lbs (890 N) minimum
Bursting strength	500 psi (3.5 MPa) minimum
Elongation before breaking	10% to 35%
Percent open area	4.0% to 6.5%
Non-woven Fabrics	
Puncture resistance	30 lbs (135 N) minimum
Grab tensile strength	65 lbs (290 N) minimum
Grab elongation	40% minimum
Flow rate [H from 3 to 1 in (75 to 25 mm)]	50 gal/min/ ft² (34 liters/second/m²) (minimum) to 350 gal/ min/ft² (240 liters/second/m²) (maximum)

Use fabric evaluated by the National Transportation Product Evaluation Program (NTPEP).

5. Seams
   a. Get approval on the seams from the Engineer before use on a Project.
   b. Use fabric sewn with thread of the same chemical requirements as the fabric, or use fabric bound with cement or heat. Either have the fabric bound or sewn at the point of manufacture or at a location approved by the Engineer.
   c. Seam Uses: You may use one seam in edge drain and underdrain applications.

      You may bond or sew fabric together to form sections at least 6 ft (1.8 m) wide for use under rip rap or behind retaining walls.
6. Fabric Use
   a. Use woven fabrics beneath rip rap when dropping stone from 3 ft (1 m) or less.
   b. You may use woven fabrics that meet the flow rate for edge drains.
   c. Use non-woven fabrics to line edge drains, underdrains, or behind retaining walls, where specified.
   d. Do not use non-woven fabrics for filter beneath rip rap.

B. Fabrication

General Provisions 101 through 150.

C. Acceptance

Test according to the following:

Test	Method
Puncture resistance	ASTM D 4833
Tensile strength, elongation, grab strength	ASTM D 4632
Bursting strength	ASTM D 3786
Percent open area	GDT 88
Flow rate	GDT 87

1. See QPL 28 for acceptable woven and non-woven fabrics meeting the requirements of this Specification. See QPL 47 for acceptable Geocomposite wall drains.
2. The Department will reject any fabrics that meet this Specification but fail to perform in actual use.

D. Materials Care and Warranty

Wrap fabric in burlap or similar heavy duty protection during shipment and storage to protect it from mud, dirt, dust, and debris.

881.2.06 Pavement Reinforcement Fabric

A. Requirements

Type I and Type II Pavement Reinforcement Fabric

1. Use pavement reinforcement fabric that has the following properties:
   - Is non-woven, heat-resistant material composed of polypropylene or polyester fibers
   - Can be saturated with asphalt cement
   - Can be placed smooth with mechanical devices and be without wrinkles
   - Can withstand the heat of asphaltic concrete mixes during paving operations
   - Can withstand normal field handling and construction operations without damage
   - Meets the following physical requirements. The bid item or Plans will indicate which type of fabric is required for a Project.

	Type I	Type II
Tensile strength, minimum	90 lbs (400 N)	125 lbs (555 N)
Elongation at break	40% min., 100% max.	40% min., 100% max.
Asphalt retention, minimum	0.18 gal/yd² (0.8 L/m²)	0.28 gal/yd² (1.3 L/m²)

2. Submit a certificate from the manufacturer showing the physical properties of the material used and how it meets this Specification. Submit the certificate according to Subsection 106.05, "Materials Certification."
3. Demonstrate to the Department that fabric meeting the physical properties requirements of this Specification has been used successfully in installations with similar environmental and Project conditions.
   - For a list of sources, see QPL 40.

High Strength Pavement Reinforcement Fabric

1. Use pavement reinforcement fabric with the following properties:
   - Is a flexible, water-resistant, high-density asphaltic membrane laminated between two layers of high strength, heat resistant polypropylene or polyester fabric.
   - Can be placed smooth with mechanical devices and be without wrinkles.
   - Can withstand the heat of asphaltic concrete mixes during paving operations.
   - Can withstand normal field handling and construction operations without damage.
   - Has a self-adhesive backing adhered to a film release liner.
   - Meets the following physical requirements. The bid item or Plans will indicate which type of fabric is required for a Project.

Width, minimum	18 in (450 mm)
Tensile strength, minimum	1,800 lbs/in^2 (12 MPa)
Elongation	20% to 50%
Softening Point (Asphaltic membrane), minimum	190 ^{0}F (87 ^{0}C)
Caliper	0.135 inch (3.43 mm) 95% retained after loading
Pliability (Cold Flex) 2" (50 mm) X 5" (125 mm) specimen, condition specimen at 0 ^{0}F (-18 ^{0}C)for 1 hour, 180^0 bend on 2" (50 mm) mandrel	No Separation

2. Submit a certificate from the manufacturer showing the physical properties of the material used and how it meets this Specification. Submit the certificate according to Subsection 106.05, "Materials Certification."
3. Demonstrate to the Department that fabric meeting the physical properties requirements of this Specification has been used successfully in installations with similar environmental and Project conditions.
   - For a list of sources, see QPL 40.

B. Fabrication

General Provisions 101 through 150.

C. Acceptance

Type I and Type II Pavement Reinforcement Fabric

Test according to the following:

Test	Method
Tensile strength	ASTM D 4632 Grab
Elongation	ASTM D 4632 Grab
Asphalt retention	GDT 95

High Strength Pavement Reinforcement Fabric

Test according to the following:

Test	Method
Tensile strength	ASTM D 412
Elongation	ASTM D 412
Softening Point	ASTM D 36
Caliper	ASTM D 1777
Pliability (Cold Flex)	ASTM D 146

D. Materials Warranty

General Provisions 101 through 150.

881.2.07 Silt Fence Filter Fabric

A. Requirements

1. Use approved silt fence from QPL 36.
   a. Type "A" and "B" Fences: Use either woven or nonwoven filter fabric for Type "A" and "B" fences. If using woven fabric, the fabric may have slit tape yarns in one direction (warp or fill) only.
   b. Type "C" Fences: Use non-calendered woven fabric constructed with monofilament yarns only.

NOTE: Approved fabrics must consistently exceed the minimum requirements of this Specification as verified by the Office of Materials and Research. If a fabric is removed from the Qualified Products List, do not use it in the work until the Department has reestablished the product's acceptability.

2. Ensure silt fence filter fabrics have the following characteristics:
   - Has strong rot-proof synthetic fibers formed into either a woven or non-woven fabric
   - Has no treatment or coating that might significantly alter its physical properties after installation
   - Contains stabilizers and/or inhibitors to make the filaments resistant to deterioration resulting from exposure to sunlight or heat
   - Makes a pervious sheet of synthetic fibers oriented into a stable network so that the fibers retain their relative position with respect to each other under normal handling, installation, and service conditions
   - Has finished fabric edges to prevent the outer yarn from pulling away from the fabric
   - Has no defects or flaws that would significantly affect its physical and/or filtering properties
   - Meets the following physical or dimensional requirements:

Type Fence	A	B	C
Minimum tensile strength, pounds (newtons) (1)	Warp – 120 (530) Fill – 100 (445)	Warp – 120 (530) Fill – 100 (445)	Warp– 260 (1155) Fill – 180 (800)
Elongation (% Max.)	40	40	40
Apparent opening size (max. sieve size)	No. 30 (600 um)	No. 30 (600 um)	No. 30 (600 um)
Flow rate, gal/ min./ft² (L/min./m²)	25 (1015)	25 (1015)	70 (2850)
Ultraviolet stability (2)	80	80	80
Bursting strength, psi (kPa)	175 (1200)	175 (1200)	175 (1200)
Minimum fabric width	36 in (914 mm)	22 in (559 mm)	36 in (914 mm)
1. Minimum roll average of five specimens. 2. Percent of required initial minimum tensile strength.			

3. Use silt fence filter fabrics evaluated by the National Transportation Product Evaluation Program (NTPEP).

B. Fabrication

The fabric may be manufactured with pockets for posts, hems with cord, or with posts pre-attached using staples or button head nails.

Ensure the fabric has the manufacturer's name and product trade name labeled on the fabric at a minimum of 25 ft (7.6 m) intervals. Ensure the fabric has a color yarn mark in the fabric 14 inches (355 mm) ± 0.5 inch (12 mm) from both top and bottom ends for Type A and C and 8 inches (203 mm) ± 0.5 inch (12 mm) from both top and bottom ends for Type B fabric.

C. Acceptance

Test according to the following:

Test	Method
Tensile strength	ASTM D 4632
Elongation	ASTM D 4632
Apparent opening size	ASTM D 4751
Flow Rate	GDT 87
Ultraviolet stability	ASTM D 4632 (after 300 hours weathering according to ASTM D 4355)
Bursting strength	ASTM D 3786, Diaphragm Bursting Strength Tester

D. Materials Care and Warranty

Wrap fabric in a heavy-duty protective covering during shipment and storage to protect it from mud, dirt, dust and debris.

Do not expose fabric to temperatures greater than 140 ^{o}F (60 ^{o}C).

881.2.08 Filter Fabric for Embankment Stabilization

See Special Provision.

Section 882—Lime

882.1 General Description

This Section includes the requirements for agricultural lime; lime for subbase and subgrade stabilization; and lime for asphaltic concrete.

882.1.01 Related References

A. Specifications

General Provisions 101 through 150.

Section 163 – Miscellaneous Erosion Control Items

Section 700 – Grassing

GSP 18

B. Referenced Documents

AASHTO M 303

ASTM C 25

ASTM C 110

ASTM C 977

Liming Materials Act of 1996

882.2 Materials

882.2.01 Agricultural Lime

A. Requirements

Apply agricultural lime made of ground or pelletized dolomitic limestone at the rate recommended by a public or private Soil Laboratory that participates in a national proficiency testing program. Proof of testing is the responsibility of the Contractor. Provide a soil test report to the Engineer prior to application. Take soil test samples in accordance with GSP 18 Sampling Testing and Inspection Specifications. Agricultural lime will meet the following requirements:

Requirements	Percent by Weight
Calcium Carbonates Equivalent, min.	85
Elemental magnesium derived from magnesium carbonate, min.	6
Passing No. 10 (2.00 mm) sieve, min	90
Passing No. 100 (150 µm) sieve, min	25

B. Fabrication

General Provisions 101 through 150.

C. Acceptance

The Department will accept agricultural lime that meets the above requirements.

D. Materials Warranty

General Provisions 101 through 150.

882.2.02 Lime for Subbase and Sub-Grade Stabilization

A. Requirements

Use either a commercial dry hydrated lime or a commercial granular quicklime for soil stabilization.

1. Hydrated Lime: Use hydrated lime that meets the requirements of ASTM C 977, except use lime that has at least 85 percent by weight passing the No. 200 (75 µm) sieve.
2. Quicklime: Use quicklime that meets the requirements of ASTM C 977, except use lime that has 100 percent by weight passing the 3/8-inch (9.5 mm) sieve. If slurry is to be made from slaking quicklime, use quicklime containing at least 94 percent total calcium oxide and magnesium oxide (CaO + MgO), and at least 90 percent total available calcium oxide (CaO).
   a. Furnish certified test reports with each shipment of lime attesting that the lime meets the requirements of the Specification. However, the Engineer may inspect, test, and reject the material at any time.
   b. Lime from more than one source or more than one type on the same Project may be used, but do not mix lime of different types or from different sources.
   c. Protect the lime from exposure until used. Ensure that the lime is dry enough to flow freely when handled.

B. Fabrication

General Provisions 101 through 150.

C. Acceptance

Test the hydrated and quicklime used for soil stabilization according to ASTM C 977.

D. Materials Warranty

General Provisions 101 through 150.

882.2.03 Lime for Asphaltic Concrete

A. Requirements

Use hydrated lime that meets the chemical and physical properties of AASHTO M 303, Type I.

B. Fabrication

General Provisions 101 through 150.

C. Acceptance

1. Run the chemical analysis of hydrated lime used in asphaltic concrete according to ASTM C 25.
2. Test the physical properties of the hydrated lime according to the residue test in ASTM C 110.

NOTE: QPL 41 **for lime is used in asphaltic concrete only.**

3. See QPL 41 for acceptable hydrated lime that meets the requirements of this Specification.

D. Materials Warranty

General Provisions 101 through 150.

Section 883—Mineral Filler

883.1 General Description

This section covers mineral filler used as an ingredient in bituminous paving mixtures. Use mineral filler listed in the approved Asphalt Mix Design and Job Mix Formula and in Qualified Products List (QPL) 81. Use an approved mineral filler that meets the requirements below and consist of finely divided rock dust, slag dust, hydrated lime, hydraulic cement, or fly ash. Other fine, inert, non-toxic materials produced as by-products of industrial processes and meeting the requirements below may be approved as mineral filler based on satisfactory performance in the asphalt mix design procedure. Ensure mineral filler is sufficiently dry, flows freely, and is free from lumps.

883.1.01 Related References

A. Standard Specifications

General Provisions 101 through 150.

B. Referenced Documents

QPL81

AASHTO R 28

AASHTO T 240

AASHTO T 313

AASHTO T 315

GDT-22

GDT 123

883.2 Materials

883.2.01 Mineral Filler

A. Requirements

Use mineral filler meeting the following gradation limits:

Sieve Size	Percent Passing
No. 30 (600 μm)	100
No. 50 (300 μm)	95-100
No. 200 (75 μm)	55-100

Ensure that the mineral filler is free from impurities.

Subject mineral filler for use in Stone Matrix Asphalt (SMA) to mortar property testing according to AASHTO T-240, AASHTO R-28, AASHTO T-313, and AASHTO T-315. Mineral filler may be rejected and removed from QPL-81 for unsatisfactory performance as an ingredient in an asphalt mixture, as determined in these procedures or in the SMA Mix design procedure, GDT-123. Ensure the total fine mortar meets the following requirements:

Test	Specification
Unaged DSR, G*/sinδ(kPa)	5 minimum
RTFO Aged DSR, G*/sinδ(kPa)	11 minimum
PAV Aged BBR, Stiffness (MPa)	1500 maximum

B. Fabrication

General Provisions 101 through 150.

C. Acceptance

Test gradation according to GDT-22.

D. Materials Warranty

General Provisions 101 through 150.

Section 884—Chlorides

884.1 General Description

This section includes the requirements for calcium chloride.

884.1.01 Related References

A. Standard Specifications

General Provisions 101 through 150.

B. Referenced Documents

AASHTO M 144

884.2 Materials

884.2.01 Calcium Chloride

A. Requirements

Use calcium chloride that meets the requirements of AASHTO M 144, Type I or Type II.

B. Fabrication

General Provisions 101 through 150.

C. Acceptance

General Provisions 101 through 150.

D. Materials Warranty

General Provisions 101 through 150.

Section 885— Elastomeric Bearing Pads

885.1 General Description

This section includes the requirements for elastomeric bearing pads.

885.1.01 Related References

A. Standard Specifications

Section 106—Control of Materials

B. Referenced Documents

AASHTO Standard Specifications for Highway Bridges: Divisions I and II

AASHTO M 251

885.2 Materials

885.2.01 Elastomeric Pads

A. Requirements

1. Type

   Use elastomeric bearing pads of the types, dimensions, and shapes specified in the Plans.

   a. Design the pads according to Division I of the AASHTO Standard Specifications for Highway Bridges.

   b. Use 100 percent virgin chloroprene (neoprene) that meets the requirements of AASHTO M 251 as the elastomer portion of the compound, unless otherwise specified.

2. Certification:

   Submit, with each shipment from the neoprene manufacturer, a certification to the Engineer about the physical properties of the material and compliance with these specifications.

   a. Submit a certificate from the pad manufacturer stating that the lot representing the shipment has been tested according to AASHTO M 251.

   b. Include test results data in the certificates.

B. Fabrication

Use the materials, fabricate, and install the pads according to Division II of the AASHTO Standard Specifications for Highway Bridges.

C. Acceptance

The Department will accept the pads based on the material certification and inspection of each pad. The Department will inspect the pads when received for compliance to quality of work, type, dimension, and shape requirements.

The Department reserves the right to sample and test completed pads according to the provisions of Section 106.

D. Materials Warranty

General Provisions 101 through 150.

Section 886—Epoxy Resin Adhesives

886.1 General Description

This section includes the requirements for the most common epoxy adhesives used in highway construction or maintenance.

886.1.01 Related References

A. Standard Specifications

General Provisions 101 through 150.

B. Referenced Documents

AASHTO T 237

ASTM 2240

Federal Hazardous Products Labeling Act

GDT 58

QPL 15

886.2 Materials

886.2.01 Epoxy Resin Adhesives

A. Requirements

1. Use the types of epoxy adhesives below:
   a. Type I-R: Rapid-setting marker adhesive for bonding raised pavement markers to pavement.
   b. Type I-S: Standard setting marker adhesive for bonding raised pavement markers to pavement.
   c. Type II: Epoxy adhesive for bonding plastic concrete to hardened concrete.
   d. Type III: Epoxy adhesive for bonding hardened concrete to hardened concrete, or for bonding miscellaneous materials such as metals.
   e. Type IV: Epoxy adhesive for creating an epoxy mortar for use with clean concrete or mortar sand.
   f. Type V: Epoxy adhesive for repairing cracks in concrete by intrusion grouting.
   g. Type VI: Epoxy adhesive for a complete application or as a component in the application of a skid resistant or protective coating on hardened Portland cement concrete or asphaltic concrete.
   h. Type VII: Discontinued.
   i. Type VIII: Epoxy adhesive used for anchors and dowel bar implants. Do not use in sustained tension load applications. Either mix this epoxy by machine to the proper ratio or package it in a two-component cartridge with a mixing nozzle that thoroughly mixes the two components as they are dispensed. Use a nozzle at least 8 in (200 mm) long.
2. Furnish the epoxy adhesive as two separate components.
3. Viscosity

   Ensure that the viscosities of the separate components are similar and conducive to easy blending of the epoxy adhesive system.
   a. Submit the viscosity for the epoxy adhesive system to the Engineer.
   b. Ensure that the viscosity of the mixed system is compatible with the intended use of the system.

4. Labeling

   Clearly label each container of the separate components of an epoxy adhesive system with the following information:

   - Specification number and type
   - Component designation (A or B)
   - Manufacturer's batch number—a batch is a single charge of all components in a mixing chamber
   - Expiration date (shelf life for separate components in original containers)
   - Mixing ratio and directions (by volume or weight as designated by the manufacturer)
   - Potential hazards and precautions according to the Federal Hazardous Products Labeling Act

5. Stencil the component designation on the top of each container.
6. Physical Requirements

   Ensure that the mixed epoxy adhesive system meets the applicable requirements of Table 1.

B. Fabrication

General Provisions 101 through 150.

C. Acceptance

Each epoxy adhesive system shall meet the requirements of this Section.

If the Department qualifies or disqualifies a system for one of the types specified, it will not affect the qualification or disqualification of any other type.

The Department will reject any epoxy adhesive system that meets all the requirements of this Section, but fails in actual use. For a list of sources, see QPL 15.

D. Materials Warranty

General Provisions 101 through 150.

Table 1

Mixed Epoxy Adhesive Systems Requirements

	Type Designation									
Property	**I-R**	**I-S**	**II**	**III**	**IV**	**V**	**VI**	**VII**	**VIII**	**Test Method**
Pot Life at 77 °F (25 °C) (minutes)	6-11	8-13	30	10-45	30-60	10-45	30-60	—	3-10	GDT 58
Elongation at 77 °F (25 °C) (percent)	—	—	—	—	30**	—	30**	—	5% Max.	GDT 58
Bond Strength, psi (MPa) at 1 hr and 77 °F (25 °C)	180 (1.2)	—	—	—	—	—	—	—	—	GDT 58
at 3 hr and 77 °F (25 °C)	—	180 (1.2)	—	—	—	—	—	—	250 (1.7)	
at 24 hr and 77 °F (25 °C)	400 (2.8)	400 (2.8)	400 (2.8)	400 (2.8)	250 (1.7)	400 (2.8)	250 (1.7)	—	400 (2.8)	
Shore D Hardness at	—	—	—	—	75	—	35-65	—	—	

77 °F (25 °C)					Max.					ASTM: 2240
SAG Test	—	—	—	—	—	—	—	—	No Sag	AASHTO: T 237
Wet Bond Test ,psi (MPa)	—	—	400 (2.8)	—	—	—	—	—	—	AASHTO: T 237 Section 31
Shelf Life*** (months)	6	6	6	24	12	24	6	—	6	

Note: * Values are minimums except where a range is shown, or otherwise noted.

** Epoxy adhesive system only. *** For separate components in original containers.

Section 887— Bearing Plates with Polytetrafluoroethylene Surfaces

887.1 General Description

This section includes the requirements for polytetrafluoroethylene (PTFE) bearing surfaces.

887.1.01 Related References

A. Standard Specifications

Section 106—Control of Materials

B. Referenced Documents

AASHTO Standard Specifications for Highway Bridges, Division II

ASTM D 4894

ASTM D 4895

887.2 Materials

887.2.01 PTFE Bearing Surfaces

A. Requirements

1. Ensure the expansion bearings with polytetrafluoroethylene (PTFE) sliding surfaces meet the dimensions shown on the Plans and meet the requirements of the fastening method to the structure.
2. Use bearings that meet the requirements for PTFE Bearing Surfaces in Division II of the AASHTO Standard Specifications for Highway Bridges.
3. Ensure the PTFE resin is virgin material, not reprocessed, and meets the requirements of ASTM D 4894 and ASTM D 4895.
4. Submit certified test reports, materials certificates, and a certificate of compliance with this Specification.

B. Fabrication

1. Package each completed bearing to protect it from damage during shipment and storage.
2. Clearly identify and mark the components of each bearing and securely fasten them for shipment. Ship to the Project locations for each structure, as stated on Plans.

C. Acceptance

The Department reserves the right to sample and test completed bearings or components according to Section 106.

D. Materials Warranty

General Provisions 101 through 150.

Section 888—Waterproofing Membrane Materials

888.1 General Description

This section includes the requirements for waterproofing materials that serve as a barrier between the concrete bridge deck and the overlay of asphaltic concrete. The membranes included herein are for bridge decks, pavement joints and cracks, and retaining wall joints.

888.1.01 Related References

A. Standard Specifications

Section 106—Materials Certification

B. Referenced Documents

ASTM D 146

ASTM D 412 (Die C)

ASTM D 882 (Method A)

ASTM E 96 Procedure B

ASTM E 154

GDT 69

QPL 22

888.2 Materials

888.2.01 Waterproofing Membrane Material for Bridge Decks

A. Requirements

1. Use a water-resistant primer adhesive that is supplied by the manufacturer of the membrane or other approved equal compatible with the membrane.
2. Use an approved sealant compatible with the membrane and primer as mastic.
3. Provide certified results from the manufacturer of the membrane system of the tests in Subsection 888.2.01.C.
4. Re-submit the certified test results each time the product's formulation is changed.
5. For a list of sources, see QPL 22.

B. Fabrication

General Provisions 101 through 150.

C. Acceptance

Test the membrane system with GDT 69 and meet these requirements:

Characteristic	Requirement
Bond	No break in bond, curled edges, bubbles, or pinholes
Water permeability	Above 500,000 ohms/ft² (5.4 megaohms/m²), measured indirectly in ohms per square foot (meter)
Heat resistance	Withstand 300 °F (150 °C) and retain an electrical resistance above 500,000 ohms/ft² (5.4 megaohms/m²)
Resistance to aggregate penetration	Retain an electrical resistance above 500,000 ohms/ft² (5.4 megaohms/ m²) after granite chip creep damage test for 20 hours at 140 °F (60 °C)
Resistance to freeze-thaw cycles	After 10 cycles of freezing and thawing, the test membrane shall have the tensile strength of similar samples of the same membrane unfrozen
Chemical resistance	Remain intact and in good condition when immersed for 30 days in each of the following inorganic acids, alkalies, and salts: • 5% sulfuric acid • 5% hydrochloric acid • 5% sodium hydroxide • 25% sodium chloride • 25% calcium chloride
Resistance to shear	Have a shear resistance of 100 lbs (45 kg), or pass the Department's evaluation of where and how the shear failure took place.
Waterproofing effectiveness	The membrane system does not displace; retain an electrical resistance above 500,000 ohms/ft² (5.4 megohms/m²)

See QPL 22 for membranes that meet the requirements of this Specification.

888.2.02 Waterproofing Membrane for Pavement Joints and Cracks

A. Requirements

1. Use waterproofing membrane that incorporates a high-strength, heat-resistant woven fabric embedded in a layer of self-adhesive rubberized asphalt.
   a. Ensure that the membrane contains at least 14 percent synthetic rubber by weight.
   b. Ensure that the combined amount of asphalt and plasticizer oils is at least 60 percent of the total weight of the membrane. The total weight of the membrane for this purpose does not include the weight of any reinforcement or fabric.
2. Get primer from the membrane manufacturer or some approved equal compatible with the membrane.
3. Use membrane with the following physical properties:

Thickness of rubber-asphalt membrane	0.065 in (1.65 mm) minimum
Water permeability	500,000 ohms/ft² (5.4 megaohms/m²)
Breaking factor	50 lbs/in (8.75 kN/m) minimum
Heat resistance	300 °F (150 °C) minimum without membrane damage and retain minimum 500,000 ohms/ft² (5.4 megaohms/ m²) resistivity
Puncture resistance (mesh)	200 lbs (900 N) minimum
Elongation of mesh	15 to 60% minimum
Pliability 1/4 in (6 mm) Mandrel 180° bend at –15 °F, ± 2 °F (-26 °C, ± 1 °C)	No cracks in the membrane

B. Fabrication

General Provisions 101 through 150.

C. Acceptance

1. Test as follows:

Test	Method
Water permeability	GDT 69
Breaking factor	ASTM D 882 (Method A)
Heat resistance	GDT 69
Puncture resistance	ASTM E 154
Elongation of mesh	ASTM D 882
Pliability ¼ in (6 mm) mandrel, 180° bend at –15 °, ± 2 °F (-26 °, ± 1 °C)	ASTM D 146

2. See QPL 22 for membranes that meet the requirements of this Specification.
3. The Department will remove from the list any membrane that meets this Specification but fails in actual use.

D. Materials Warranty

General Provisions 101 through 150.

888.2.03 Waterproofing Membrane for Retaining Wall Joints

A. Requirements

1. Use these waterproofing barriers for concrete and other masonry surfaces at locations shown on the plans.
2. Use waterproofing membrane that incorporates a cross-laminated, high density polyethylene film, adhered to a flexible, self-adhesive, rubberized asphalt.
3. Get primer from the membrane manufacturer or an approved equal compatible with the membrane.
4. Use membranes that meet the following requirements when tested with the required test method:

Thickness	0.060 in (1.5 mm) minimum
Thickness of polyethylene film	0.004 in (100 µm) minimum
Tensile strength	250 psi (1.7 MPa) minimum
Ultimate elongation	200% minimum
Permeance-perms grains/ft²/hr/in Hg (ng/s· m² ·Pa)	0.1 (5.7) maximum
Cycling over crack at –15 °F (–26 °C)	No effect 100 cycles
Puncture resistance	40 lbs (180 N) minimum
Pliability (180° bend over 1 in (25 mm) mandrel at –25 °F (–32 °C))	No cracks

5. Submit a certification from the manufacturer that the physical properties of the membrane meet the Specification according to Subsection 106.05, “Materials Certification.”

B. Fabrication

General Provisions 101 through 150.

C. Acceptance

Test as follows:

Test	Method
Tensile strength	ASTM D 412 (Die C)
Ultimate elongation	ASTM D 412 (Die C)
Permeance	ASTM E 96 Procedure B
Puncture resistance	ASTM E 154
Pliability	ASTM D 146
Cycling over crack	Apply and roll membrane across two primed concrete blocks with no separation between the blocks. Open and close the crack from 0 to 1/4 in (6 mm).

See QPL 22 for membranes that meet the requirements of this Specification.

D. Materials Warranty

General Provisions 101 through 150.

Section 890—Seed and Sod

890.1 General Description

This section includes the requirements for seed and sod.

890.1.01 Related References

A. Standard Specifications

General Provisions 101 through 150.

B. Referenced Documents

General Provisions 101 through 150.

890.2 Materials

890.2.01 Seed

A. Requirements

1. Use seed that meets the requirements of the Georgia Seed Laws and Rules and Regulations.
2. The germination, purity, and maximum weeds specified in the Georgia Seed Laws for all seeds used by DOT are:

Germination and hard seed minimum	70%
Purity minimum	90%
Weed seeds maximum	2%
Noxious seeds maximum	300 seeds per lb (660 seeds per kg), subject to the limitations in Table 1

3. Seed Mixture

When seed mixtures are specified, each variety of seed shall be furnished separately and mixed after approval by the Engineer.

Table 1—Noxious Weed List

Name	Limitations
1. Field Bindweed (Convolvulus arvensis)	Prohibited
2. Cocklebur	Prohibited
3. Hedge Bindweed (Convolvulus sepium)	Prohibited
4. Nutgrass (Cyperus Rotundus)	Prohibited
5. Blessed Thistle (Cnicus benedictus)	9 per pound (20 per kg)
6. Wild Onion and/or Wild Garlic ((Allium spp.)	27 per pound (60 per kg)
7. Sandbur (Cenchrus pauciflorus)	27 per pound (60 per kg)
8. Johnson Grass (Sorghum halepense)	100 per pound (220 per kg)
9. Wild Mustard and Turnips (Brassica spp.)	27 per pound (60 per kg)
10. Blue Weed (Helianthus ciliaris)	200 per pound (440 per kg)
11. Wild Radish (Raphanus raphanistrum)	27 per pound (60 per kg)
12. Dodders (Cuscuta spp.)	100 per pound (220 per kg)
13. Canada Thistle (Cirsium arvense)	100 per pound (220 per kg)
14. Quack Grass (Agrophron repens)	100 per pound (220 per kg)
15. Russian Knapweed (Centaurea Picris)	100 per pound (220 per kg)
16. Bermuda Grass (Cynodon dactylon)	300 per pound (660 per kg)
17. Cheat or Ches (Bromus secalinus and/or Bromus commutatus)	300 per pound (660 per kg)
18. Darnel (Lolium temulentum)	200 per pound (440 per kg)
19. Cornockle (Agrostemma githago)	100 per pound (220 per kg)
20. Horsenettle (Solanum carolinense)	200 per pound (440 per kg)
21. Purple Nightshade (Solanum elaeagnifolium)	200 per pound (440 per kg)
22. Buckhorn Plantain (Plantago lanceolata)	200 per pound (440 per kg)
23. Docks (Rumex spp.)	100 per pound (220 per kg)
24. Gian Foxtail	100 per pound (220 per kg)
25. Sheep sorrel (Rumex acetosells)	200 per pound (440 per kg)
26. Red Rice (oryza sativa variety)	300 per pound (660 per kg)
27. Sorghum almum	100 per pound (220 per kg)
Sum Total Noxious Weeds	300 per pound (660 per kg)

B. Fabrication

General Provisions 101 through 150.

C. Acceptance

1. Get approval from the Engineer before sowing seed.
2. Ensure each bag of seed is tagged with an analysis tag showing the results of a test made within 9 months of planting.
   a. Collect and check the tags to ensure that they show a lot number, a test date within 9 months, and that the seed quality meets the requirements in Table 1 .
   b. The Georgia Department of Agriculture and the laboratory will randomly sample seed.
3. Even though the Engineer approves the seed, you are still responsible to furnish and sow seed that meets these Specifications at the time of sowing.
4. If the Engineer requires, provide seed samples to the Engineer early enough before seeding to allow further testing before seeding.
5. You may increase the rate of seeding to obtain the minimum pure live seed content specified if a low percentage of germination causes the quality of the seed to fall below the minimum.

NOTE: You may increase the seeding rates if the noxious weed seed per square yard (meter) does not exceed the allowable quantity at the regular rate of seeding.

6. The Department will reject wet, moldy, or otherwise damaged seed.

D. Materials Warranty

General Provisions 101 through 150.

890.2.02 Sod

A. Requirements

1. Use living, growing sod of the designated species for block or big roll sod. This includes sod that is dormant during the cold or dry season and capable of renewing growth after the dormant period.
2. Obtain all sod from approved nurseries that have a Georgia Live Plant License.
3. Ensure that at least 75 percent of the plants in the sod are of the designated variety of grass.

B. Fabrication

1. Mow grass and weeds to a maximum height of 3 in (75 mm). Rake and remove the grass before cutting the sod.
2. Cut the sod into the following sizes:
   - Block sod—12 in (300 mm) by 22 in (550 mm)
   - Big roll sod—21 in (525 mm) by 52 ft (15.8 m)

   Ensure that the sod has at least 1/2 in (15 mm) of soil adhering firmly to the roots.
3. Always exercise care to retain the soil on the roots of the sod during cutting, transporting, and planting. Do not dump the sod from vehicles.

C. Acceptance

The Department will accept the material based on the following:

1. Notify the Engineer to inspect the sod sources before it is harvested.
2. The Engineer will inspect the sod while it is being planted.
3. The Department will reject sod with weeds or other growth or foreign material that may be detrimental to the planting. Sod that is excessively dried out, exposed to heat, or not viable will also be rejected.

Do not assume that an approval of a source means that the material is accepted.

D. Materials Warranty

1. Transplant the sod within 72 hours from the time it is harvested.

2. Sod that is not transplanted within 24 hours shall be kept moist and protected from exposure to heat, direct sunlight, and freezing until it is transplanted. Do not exceed the 72-hour time limit for transplanting all of the harvested sod.
3. Cut and install sod only when the soil moisture conditions are favorable.

Section 891—Fertilizers

891.1 General Description

This section includes the requirements for fertilizers. Comply and meet the fertilizer requirements of the Georgia Fertilizer Act of 1997 and the Georgia Soil Amendment Act of 1976 which regulates labeling, sampling and tonnage reporting. Purchase all fertilizers through a Georgia registered licensed distributor. All fertilizer is subject to a sampling inspection by the Georgia Department of Agriculture.

891.1.01 Related References

A. Standard Specifications

General Provisions 101 through 150

Section 163 – Miscellaneous Erosion Control Items

Section 700 - Grassing

Section 702 – Vine, Shrub, and Tree Planting

GSP 18

B. Referenced Documents

Georgia Fertilizer Act of 1997

Georgia Soil Amendment Act of 1976

891.2 Materials

891.2.01 Fertilizer

A. Requirements

1. Use commercial fertilizer as a single nutrient or mixed grade.
2. Apply fertilizer based on recommendations from a public or private Soil Laboratory that participates in a national proficiency testing program. Proof of testing is the responsibility of the Contractor. Provide a soil test report to the Engineer prior to application. Take soil test samples in accordance with GSP 18 Sampling ,Testing and Inspection Specifications.
3. From this recommendation use single nutrient or mixed grade fertilizers containing the nutrients - nitrogen(N), phosphate (P_2O_5), and potash(K_2O) in amounts recommended by the soil test. Composted animal manure may be substituted for commercial fertilizer that meets the soil test recommendations. See web based Fertilizer Calculators to assist in determining the correct analysis and amounts to be applied according to the soil test.
4. Clearly label the analysis on the fertilizer container.
5. Apply fertilizer as a dry or liquid material, using equipment specifically designed for mixing and agitating the fertilizer. Dry or liquid fertilizer may be applied by use of a hydroseeder.
6. Any fertilizer that becomes caked or otherwise damaged, making it unsuitable for use, shall be replaced at the Contractor's expense.

B. Fabrication

General Provisions 101 through 150.

C. Acceptance

The Department will accept fertilizer that meets the above requirements.

D. Materials Warranty

General Provisions 101 through 150.

Section 893—Miscellaneous Planting Materials

893.1 General Description

This section includes the requirements for miscellaneous planting materials, such as the following:

- Plant topsoil
- Mulch
- Vines, shrubs, trees, and miscellaneous plants
- Inoculants
- Porous material
- Prepared plant topsoil
- Tree paint
- Stakes
- Organic soil additives

893.1.01 Related References

A. Specifications

Section 814—Soil Base Materials

Section 822—Emulsified Asphalt

B. Referenced Documents

ANSI Z60.1 American Standard for Nursery Stock

"Standardized Plant Names"

"Method of Test for Moisture Content of Hay or Straw" United States Department of Agriculture and the United States Composting Council, "Test Methods for the Examination of Composting and Compost" (TMECC).

GDT 41

893.1.02 Submittals

Submissions for Erosion Control Compost

Submit a notarized certification that includes the following:

- The feedstock by percentage in the final compost product.
- A statement that the compost meets federal and state health and safety regulations.

- A statement that the composting process has met time and temperature requirements.
- A copy of the lab analysis, less than four months old, performed by a Seal of Testing Assurance certified lab verifying that the compost meets the physical requirements specified.

When requested by the Engineer, one Solvita Compost Maturity Test kit (six tests) for every 1000 yd^3 (765 m^3) of compost supplied shall be provided. The Solvita Compost Maturity Test kit is available from:

Woods End Research Laboratory Inc.
Box 297
Mt. Vernon, Maine 04352
1-800-0451-0337
email: info@woodsend.org
or approved equal.

893.2 Materials

893.2.01 Plant Topsoil

A. Requirements

1. Use plant topsoil with the following characteristics:
   - Obtained from well-drained, arable land, but not from fields where tobacco grew in the last three years, or where Johnson grass or kudzu is present.
   - Friable, loamy soil with between 2 and 30 percent organic matter. Determine the percentage by measuring the loss on ignition of oven-dried samples ignited at 1,200 °F (650 °C).
   - Reasonably free from subsoil, heavy or stiff clay, coarse sand, and other deleterious substances.
   - Has no toxic amounts of acid or alkaline elements.
   - Can sustain healthy plant life.
   - Meets the grade requirements of Subsection 814.2.01.A.8.
2. The Department reserves the right to inspect all plant topsoil during the planting period. The Department will reject any material that does not meet the Specifications.
3. Do not use frozen, muddy, or nonfriable topsoil.
4. Before delivering any topsoil to the job site, clear stones larger than 2 in (50 mm) size and roots, sticks, brush, coarse litter, and other substances that would interfere with mixing, planting, and maintenance.

B. Fabrication

General Provisions 101 through 150.

C. Acceptance

General Provisions 101 through 150.

D. Materials Warranty

General Provisions 101 through 150.

893.2.02 Mulch

A. Requirements

1. Use mulch materials from two groups:
   a. Grassing and Erosion Control: Threshed rye, oat or wheat straw; or Bermuda grass hay
   b. Vine, Shrub, Tree, and Miscellaneous Plant Plantings: Pine straw, pine bark, or hardwood mulch (see 893.2.07.A.2 for pine bark and hardwood mulch).

2. Use mulch materials from either group that meet the following requirements:
   - Are accepted by the Engineer.
   - Can be distributed uniformly when properly loosened
   - Produce the desired results
   - Meet the moisture requirements specified herein
   - Contain no excessive amounts of noxious weed seeds
3. Noxious Weed Seeds

   Do not use hay or straw mulch material that has matured seeds from noxious weeds or other species that would harm surrounding farmland.
4. Moisture Content

   Ensure that the mulch material is reasonably dry.
5. Erosion Control Compost

   Use erosion control compost that consists of 50% untreated wood chips blended with 50% general use compost measured by volume.

   a. Wood Chips shall be fresh or partially composted wood chips less than or equal to 3 in (75 mm) in length with 100% passing a 2 in (50 mm) sieve and less than 10% passing a 1 in (25 mm) sieve. Wood chips shall not contain any visible refuse or other physical contaminants, material toxic to plant growth, or over 5% sand, silt, clay or rock material.

   b. Produce General Use Compost by aerobic (biological) decomposition of organic matter. Compost feedstock may include, but is not limited to, leaves and yard trimmings, Class A biosolids, food scraps, food processing residuals, manure or other agricultural residuals, forest residues, bark, and paper. Compost shall not contain any visible refuse or other physical contaminants, material toxic to plant growth, or over 5% sand, silt, clay or rock material. Mixed municipal solid waste compost and Class B biosolids, as defined in the United States Environmental Protection Agency Code of Federal Regulations (USEPA, CFR), Title 40, Part 503 are unacceptable. Ensure Compost meets all applicable USEPA, CFR, Title 40, Part 503 Standards for Class A biosolids and the following requirements:

Table 1 – Physical Requirements for Compost

Test	Requirements	Test Method
Organic Matter Content	30-65% (dry mass)	TMECC 05.07-A
Particle Size	100 % passing 5/8 in (15.62 mm) sieve 70% retained on 3/8 in (9.5 mm) sieve	TMECC 02.02-B
Soluble Salts	5.0 max. * dS/m	TMECC 04.10-A
Fecal Coliform	Pass	TMECC 07.01-B
pH	5.5 – 8.5 pH	TMECC 04.11-A
Stability	8 or below	TMECC 05.08-B,
Maturity	greater than 80%	TMECC 05.05-A
Heavy Metals	Pass	TMECC 04.06 and TMECC 04.13-B

*A soluble salt content up to 10.0 dS/m for compost used in Compost Manufactured Topsoil will be acceptable.

NOTE: All physical requirements are in accordance with the United States Department of Agriculture and the United States Composting Council, "Test Methods for the Examination of Composting and Compost" (TMECC).

B. Fabrication

General Provisions 101 through 150.

C. Acceptance

1. If the material feels damp, the Department will use GDT 41 to test for moisture content.
2. To pass, materials shall have a moisture content of 12 percent or less.

D. Materials Warranty

General Provisions 101 through 150.

893.2.03 Vines, Shrubs, Trees, and Miscellaneous Plants

A. Requirements

1. Use stock that meets the requirements of all State and Federal Laws for inspection of plant diseases and infestation.
2. Use nursery grown and collected plant materials that meet all regulations of the States of their origin and destination, and that meet Federal regulations governing interstate movement of nursery stock.
3. Use stock that is true to name and variety and is of first class quality with well developed tops and vigorous, healthy root systems.

NOTE: Use plant names according to the edition of "Standardized Plant Names" in effect at the time of Invitation For Bids.

4. Use only nursery-grown stock that conforms to ANSI Z60.1 American Standard for Nursery Stock.
   a. The Department will not accept plants and/or trees that are severely cut back or pruned to conform to contract size requirements.
   b. The Department will reject trees and shrubs that are undersized, have poorly developed tops or root systems, or are infected with disease or infested with insects.
5. Certification

   Furnish all certificates of disease and infestation inspection, a list of plant materials purchased, and a complete list of nurseries from which each plant was grown.

B. Fabrication

General Provisions 101 through 150.

C. Acceptance

The Department will inspect plants at the nursery whenever necessary.

1 .Inspect and grade living plants for type, size, and quality according to ANSI Z60.1 American Standard for Nursery Stock.
2. Even if the Department accepts materials after a test at the source, the Department may inspect the stock during planting and reject any that does not meet specification.
3. The Department will reject any of the following:
   - Stock damaged during digging, loading, transporting, planting, and transplanting
   - Broken or loose balls or balls of less diameter than that specified
   - Large canopy shade trees without a single dominant central leader
4. Replace rejected stock at your own expense.
5. Dispose of rejected stock to the satisfaction of the Engineer.

D. Materials Warranty

1. Delivery
   a. Give the Engineer at least 24 hours notice before delivering any stock to the job site.
   b. Send an invoice with each shipment that shows the sizes and varieties of material included.

2. Packaging

   Pack stock for shipment to properly protect against drying, freezing, breaking, or other injury.

893.2.04 Inoculants

A. Requirements

1. Use a pure culture of nitrogen-fixing bacteria for an inoculant to treat seeds. Select an inoculant for maximum vitality and ability to transform nitrogen from the air into soluble nitrates and deposit them into the soil.
2. Use only purebred cultures less than one year old.

B. Fabrication

General Provisions 101 through 150.

C. Acceptance

The Engineer will review acceptable cultures.

D. Material Warranty

General Provisions 101 through 150.

893.2.05 Prepared Plant Topsoil

A. Requirements

1. Use prepared plant topsoil made from plant topsoil, organic soil additive, commercial fertilizer, and lime, as described in Subsection 893.2.07.B.
2. Base any volume for peat moss used as an organic soil additive on the compressed bale.
3 .For loose peat, double the volume.

B. Fabrication

1. Make prepared plant topsoil from the following:
   - Four parts plant topsoil, Subsection 893.2.01
   - At least one part organic soil additive, by volume, Subsection 893.2.07.
   - A commercial fertilizer, grade 6-12-12, at the rate of 3 lb/yd^3 (1.8 kg/m^3)
   - Lime at the rate of 5 lb/yd^3 (3 kg/m^3)
2. Base the above volumes on naturally compacted, undisturbed topsoil.

C. Acceptance

See the appropriate subsections.

D. Material Warranty

General Provisions 101 through 150.

893.2.06 Stakes

A. Requirements

1. Use wood stakes as indicated in the Specifications or shown on the Plans. Use the stakes for vine, shrub, tree, and miscellaneous plantings.
2. Saw wood stakes from either oak or gum. Use only stakes that are number two common or better, either rough or dressed.

B. Fabrication

1. Cut the stakes from sound, solid, undecayed wood, without unsound knots.
2. Shape stakes to within 1/4 in (6 mm) for all dimensions.
3. Taper all stakes at one end.

C. Acceptance

The Department will reject any stake that does not meet the following test:

1 Draw a line from the center of the top to the center of the butt of each stake.

2 Ensure that the line stays within the body of the stake and is not more than 1 in (25 mm) from the geometric center of the stake.

D. Materials Warranty

General Provisions 101 through 150.

893.2.07 Organic Soil Additives

A. Use four types of organic additives: peat moss, pine bark, compost, and hardwood mulch.

1. Peat Moss

   Use peat moss that meets the following requirements:

   - Be granulated sphagnum virtually free from woody substances, consisting of at least 75 percent partially decomposed stems and leaves of sphagnum
   - Be essentially brown in color
   - Be free of sticks, stones, and mineral matter
   - Be in an air-dry condition
   - Shows an acid reaction of 3.5 pH to 5.5 pH
   - Meets State and Federal regulations

2. Pine Bark

   Use pine bark that meets the following requirements:

   - Be obtained from disease-free wood, 100 percent of which is 9 in² (5625 mm²) or less in area, and 50 percent is more than 1 in² (625 mm²) in area.
   - Contain no noxious weed seeds, soil, sawdust or any substance toxic to plant growth
   - Be at least two years old

3. Compost

   - Use compost that meets the following requirements:
   - Be organic materials that have undergone biological decomposition
   - Be disinfected using composting or similar technologies
   - Be stabilized so it is beneficial to plant growth
   - Be mature, dark brown or black in color and have minimal odors
   - Contain no human pathogens
   - Fall within a pH range of 5 to 8

   Provide to the Department a list of all the ingredients in the original compost mix in the order of their relative proportions on a weight basis.

4. Hardwood Mulch

   Use hardwood mulch that meets the following requirements:

   - Derived from disease-free deciduous trees

- Particle size of less than 1 in (25 mm) diameter and less than 3 in (75 mm) in length. Hardwood mulch shall complete two composting cycles of 140 ^{o}F (60 ^{o}C) so that all viable weed seeds are destroyed and no further decomposition due to nitrification will occur
- Free from toxic levels of acidity and alkalinity
- Derived from sources other than cypress trees

Provide test results stating that the ingredients meet Federal, State, and local requirements for priority pollutant limits and do not contain levels of any chemicals that are harmful to plants or humans.

B. Fabrication

General Provisions 101 through 150.

C. Acceptance

The Department will accept the materials based upon their compliance with this specification.

D. Material Warranty

General Provisions 101 through 150.

Section 894—Fencing

894.1 General Description

This section includes the requirements for the following types of fence and fencing accessories:

- Chain link fence
- Woven wire fence
- Barbed wire
- Ground rods
- Field fencing
- Silt fabric fencing

894.1.01 Related References

A. Standard Specifications

Section 862—Wood Posts and Bracing

Section 881—Fabrics

B. Referenced Documents

ASTM		AASHTO
A 116	A 239	M 111
A 121	A 584	M 181
A 123/ A 123M	A 585	M 232/ M 232M
A 153/ A 153M	A 702	
	F 1043	

894.2 Materials

894.2.01 Chain Link Fence

A. Requirements

Use zinc or aluminum coated steel fabrics, fittings, accessories, and posts for chain link fence conforming to the following requirements:

1. Fence Fabric

   Use woven wire with reasonably uniform 2 in (50 mm) square mesh. Ensure that the mesh has parallel sides and horizontal and vertical diagonals of uniform dimensions. Use the wire size specified on the Plans or in the Proposal.

   a. Zinc Coated: Use steel fabric that conforms to AASHTO M 181. Ensure that the wire and hot-dip coating conform to AASHTO M 181, Type I, Class C.

   b. Aluminum Coated: Use steel fabric conforming to AASHTO M 181. Ensure the wire and coating conform to AASHTO M181, Type II.

2. Fittings and Accessories

   a. Tension Wire: Use wire that conforms to AASHTO M 181. Use wire coated according to AASHTO M 181, Section 25.2 for aluminum coated fabric. Use wire coated according to AASHTO M 181, Section 3.5.2 for zinc-coated fabric.

   b. Fittings: Use fittings conforming to AASHTO M 181.

      1) Ensure fittings or accessories not included in AASHTO M 181 conform to industry standards for heavy, industrial-type fences.

      2) Hot-dip the materials in zinc with AASHTO M 111 Grade 50 Coating. For aluminum coated fabric, you may use materials made from Aluminum Alloy 360, die-cast, or Sand Alloy 356, ZG61A, or Tenzalloy.

      3) Use bolts and nuts that conform to industry standards and are zinc coated with the hot-dip process according to AASHTO M 232/ M 232M.

3. Posts, Rails, and Braces

   Use posts, rails, and braces that conform to AASHTO M 181 and ASTM F 1043. Diameter, wall thickness, and weight must conform to ASTM F 1043, Figure 2, Summary of Requirements for Industrial Fence, and the physical tolerance and material requirements must conform to AASHTO M 181. Do not use Light Industrial/Commercial Fence as detailed in ASTM F 1043, Figure 3. Check the Plans for specifications on posts used for special applications. Use special posts that conform to AASHTO M 181 or that are approved by the Office of Materials and Research.

4. Gates

   Use support posts and gate frames as designated on the Construction Detail or Project Plans. Use gate materials that meet the requirements of Subsection 894.2.01.A.3.

   a. Use the same coating requirements as for the fence posts. Coat gate frames after completing all welding.

   b. Use fittings and hinges conforming to Subsection 894.2.01.A.2.b.

B. Fabrication

Ensure that the chain link fence fabric is produced by recognized, good commercial practices.

1. Apply the zinc or aluminum coating to the fabric in a continuous process. Do not apply in roll form.
2. Carefully inspect the coated fabric visually, both before and after weaving, to determine the coating quality.

C. Acceptance

The Department will reject chain link fabric that has excessive roughness, blisters, sal ammoniac spots, bruises, flaking, bare spots, or other obvious defects to any considerable extent.

D. Materials Warranty

General Provisions 101 through 150.

894.2.02 Woven Wire Fence

A. Requirements

1. Fabric

   Use fabric that meets the requirements of ASTM A 116, Design Number 1047-6-11, with Class 3 coating.

   a. Ensure that the galvanizing is uniform.

   b. Ensure that less than 5 percent of the joints are deficient in zinc coating, as determined by ASTM A 239.

   c. You may use aluminum coated steel that meets the requirements of ASTM A 584, Design Number 1047-6-11, for the woven wire fence fabric.

2. Posts

   Use steel or wood posts of the sizes shown on the Plans.

   a. Use wood posts that meet the requirements of Subsection 862.2.01.

   b. Use steel posts and bracing that meet the requirements of ASTM A 702. Galvanize posts and braces with the hot-dip method according to ASTM A 123/A 123M.

3. Certification

   Furnish a certification to the Engineer from the manufacturer that shows the physical properties of the materials.

4. Accessories

   Galvanize the following accessories according to ASTM A 153/ A 153M. Use 0.80 oz./ft² (245 g/m²) as the galvanizing minimum. Galvanize other accessories as necessary or specified on the Plans.

   a. Wire Fasteners: Use fasteners that meet the requirements of ASTM A 702.

   b. Tension Wire: Use No. 11 gauge wire.

   c. Staples: Use No. 9 gauge staples 1-1/2 in (38 mm) long.

   d. Nails: Use 1 in (25 mm) roofing nails to fasten metal caps to wooden posts.

5. Gates

   Use support posts and gate frames of the size designated on the Construction Detail or Project Plans.

   a. Use a frame that is an all welded unit. Ensure that the gate is galvanized after welding with 2 oz./ft² (610 g/m²) of spelter coating.

   b. Use hinges, latches, and other accessories of good commercial quality that are coated as in Subsection 894.2.02.A.4.

B. Fabrication

1. Ensure that the woven wire fence fabric is produced by methods recognized as good commercial practices.
2. Carefully inspect the galvanized fabric to determine the zinc coating quality.

C. Acceptance

The Department will reject woven wire fabric that has excessive roughness, blisters, sal ammoniac spots, bruises, flaking, bare spots, or other obvious defects to any considerable extent.

D. Materials Warranty

General Provisions 101 through 150.

894.2.03 Barbed Wire

A. Requirements

1. Galvanized Steel Barbed Wire

   Use wire that meets the requirements of ASTM A 121 and has a Class 3 zinc coating.
2. Aluminum Coated Steel Barbed Wire

   Use wire that meets the requirements of ASTM A 585.
3. Posts

   Use posts as specified in Subsection 894.2.02.A.2 for barbed wire fence.

B. Fabrication

General Provisions 101 through 150.

C. Acceptance

General Provisions 101 through 150.

D. Materials Warranty

General Provisions 101 through 150.

894.2.04 Ground Rods

A. Requirements

1. Use ground rods that are 9/16 to 5/8 in (14 to 16 mm) diameter and at least 8 ft (2.4 m) long, unless otherwise shown on the Plans.
2. Ensure that the ground rods are galvanized steel with a minimum coating of 2 oz./ft² (610 g/m²) according to the requirements of ASTM A 153/ A 153M.

B. Fabrication

General Provisions 101 through 150.

C. Acceptance

General Provisions 101 through 150.

D. Materials Warranty

General Provisions 101 through 150.

894.2.05 Field Fencing (Woven Wire and Barbed Wire)

A. Requirements

1. Definition

   Field fencing designates replacement fencing outside the Right of Way or temporary fencing inside the Right of Way, provided you do not reuse the materials for permanent fencing inside the Right of Way.
2. Fence fabric

   Use woven wire fabric that meets the requirements of ASTM A 116 Design No. 939-6-12-1/2, and has a Class I coating, unless otherwise designated.
3. Barbed wire

   Use wire that meets the requirements of ASTM A 121 and has a Class I coating. Use the same number of barbed wire strands as the existing or replaced fence, or as specified in the Plans.

4. Posts

   Use either galvanized steel, painted steel, or treated timber of the dimensions and spacing shown on the Construction Detail or Plans.

5. Gates

   Use posts, frame material, hinges, and fittings of acceptable commercial quality. Get approval from the Engineer before use.

6. Use the Special Plan Details and/or Special Provisions for any special design of the field fence.

B. Fabrication

General Provisions 101 through 150.

C. Acceptance

1. Get approval from the Engineer for all materials. Ensure that the materials are of an acceptable commercial quality and are equivalent in quality to the fence being replaced or to the existing fence, as applicable.
2. Do not send materials to the laboratory unless requested by the Engineer or required by the Plans.

D. Materials Warranty

General Provisions 101 through 150.

894.2.06 Silt Fabric Fencing

A. Requirements

1. Fabric
   a. See Subsection 881.2.07, “Silt Fence Filter Fabric,” for the types of fabric available.
   b. Use a woven wire support fence or a polypropylene support mesh with Type “C” fence.
      1) Woven Wire Support Fence
         a. Ensure the woven wire support fence is at least 26 inches (660 mm) high with at least 6 horizontal wires.
         b. Ensure the vertical wires have a maximum spacing of 12 in (155 mm).
         c. Ensure the top and bottom wires are at least 10 gauge (2.49 mm) and all other wires are at least 12-1/2 gauge (2.03 mm). Use Washburn and Moen Standard requirements for determining wire gauge.
         d. You may use other designs subject to approval by the Office of Materials and Research.
      2) Polypropylene Support Mesh
         a. Ensure the polypropylene support mesh is sewn to the fabric 2 in (50 mm) ± 1 in (25 mm) from top and bottom of fabric and 11 in (279 mm) ± 1 in (25 mm) from top and bottom of fabric. Use a T-90 black polyester thread to sew mesh to fabric with a lock stitch at 5 to 7 stitches per inch.
         b. Ensure the height of the polypropylene support mesh is at least 36 in (914 mm) with a plus tolerance of 1 in (25 mm).
         c. Ensure the polypropylene support mesh minimum tensile strength in the machine direction is 60 lb/3 inches and 72 lb/3 inches in the transverse direction.
         d. Ensure minimum average weight of the polypropylene support mesh is 10.3 lb/1000 ft^2.
         e. Ensure the average strand count of the polypropylene support mesh in the machine direction is 9.0 ± 1.5 per 10 inches and 14.5 ± 0.7 per 10 inches in the transverse direction.
         f. Ensure the polypropylene support mesh contains stabilizers and/or inhibitors that make the mesh resistant to deterioration from exposure to sunlight or heat.

2. Posts

   Use post sizes and types as determined by the type of fence being installed. Generally hardwood posts will be limited to ash, hickory, or oak. Other hardwoods may be acceptable if approved by the Office of Materials and Research.

a. Type “A” Fence: Use either wood or steel posts that are at least 4 ft (1.2 m) long.
   1) If using soft wood, use posts that are at least 3 in (75 mm) in diameter or nominal 2 x 4 in (33 x 89 mm) and straight enough to provide a fence without noticeable misalignment.
   2) If using hardwood, use posts that are 1-1/2 x 1-1/2 in (38 x 38 mm) with a minus tolerance of 3/8 in (9 mm) providing the cross sectional area is at least 2.15 in 2 (1385 mm2).
   3) If using steel, use posts that are “U,” “T,” or “C” shaped with a minimum weight of 1.15 lb/ft (1.7 kg/m), and have projections for fastening the fence to the posts.

b. Type “B” Fence: Use either wood or steel posts that are at least 3 ft (900 mm) long.
   1) If using soft wood, use posts that are at least 2 in (50 mm) in diameter or nominal 2 x 2 in (33 x 33 mm).
   2) If using hardwood, use posts that are 1 x 1 in (25 x 25 mm) with a minus tolerance of 1/ 4 in (6 mm) providing the cross sectional area is at least 0.95 in^2 (610 mm^2).
   3) If using steel posts, use types “U,” “T,” or “C” shapes with a minimum weight of 0.75 lb/ft (1.1 kg/m).

c. Type “C” Fence:
   1) Woven Wire Supported: Use only steel posts with a minimum length of 4 ft (1.2 m). Use “U,” “T,” or “C” shaped posts with a minimum weight of 1.15 lb/ft (1.7 kg/m). Use posts that have projections for fastening the woven wire and filter fabric.
   2) Polypropylene Mesh Supported: Use either wood or steel posts that are at least 4 ft (1.2 m) long.
      a. If using soft wood, use posts that are at least 3 in (75 mm) in diameter or nominal 2 x 4 in (33 x 89 mm) and straight enough to provide a fence without noticeable misalignment.
      b. If using hardwood, use posts that are 2 x 2 in (50 x 50 mm) with a minus tolerance of 1/4 in (6 mm) providing the cross sectional area is at least 3.28 in^2 (2120 mm^2).
      c. If using steel posts, use “U”, “T”, or “C” shaped posts with a minimum weight of 1.15 lb/ft (1.7 kg/m). Use posts that have projections for fastening the woven wire and filter fabric.

NOTE: You must use woven wire or polypropylene mesh to provide extra support for Type “C” fence installations.

3. Fasteners for Wooden Posts
   a. Wire Staples: Use staples that are at least 17 gauge (1.37 mm), legs at least 1/2 in (13 mm) long, and a crown at least 3/4 in (19 mm) wide.
   b. Nails: Use nails that are at least 14 gauge (2.03 mm), 1 in (25 mm) long, with button heads of at least 3/4 in (19 mm).

B. Fabrication

General Provisions 101 through 150.

C. Acceptance

General Provisions 101 through 150.

D. Materials Warranty

General Provisions 101 through 150.

Section 895—Polyacrylamide (PAM)

895.1 General Description

This section covers the use of anionic Polyacrylamide (PAM) as a floculant on construction projects.

895.1.01 Related References

A. Standard Specifications

Section 700—Grassing

B. Referenced Documents

QPL 84

895.2 Materials

A. Requirements

Use only Polyacrylamide (PAM) products listed on the Qualified Products List (QPL 84).

Ensure Polyacrylamide (PAM) emulsions and powders are of the **anionic type only** and meet the following requirements:

1. Meets the EPA and FDA acrylamide monomer limits of equal to or less than 0.05% acrylamide monomer.
2. Has a density of 10% to 55% by weight and a molecular weight of 6 to 24 Mg/mole.
3. Mixture is non-combustible.
4. Contains only manufacturer recommended additives.

B. Fabrication

General Provisions 101 through 150.

C. Acceptance

1. Polyacrylamide (PAM) products must meet the requirements of Section 895 and be listed on QPL 84.
2. Provide manufacturer's data on charge density and molecular weight.

D. Materials Warranty

General Provisions 101 through 150.

Section 900—Miscellaneous

900.1 General Description

Specifications for this work will be included elsewhere in the Contract.

Section 910—Sign Fabrication

910.1 General Description

This section includes the requirements for fabricating and applying messages on sign blanks, laminated panels, and extruded panels.

910.1.01 Related References

A. Standard Specifications

Section 107—Legal Regulations and Responsibility to the Public

Section 911—Sign Posts

Section 912—Sign Blanks and Panels

Section 913—Reflectorizing Materials

Section 914—Sign Paint

Section 915—Mast Arm Assemblies

Section 917—Reflective and Nonreflective Characters

B. Referenced Documents

Manual on Uniform Traffic Control Devices (MUTCD)

910.2 Materials

Use the dimensions, colors, and reflectorizing as specified in the Plans, Proposal, and Manual on Uniform Traffic Control Devices (MUTCD).

The materials requirements are as listed below:

Material	Section
Posts for Groundmounted Signs	911
Aluminum Sign Blanks	912.2.01
Extruded Aluminum Sign Panels	912.2.02
Reflective Sheeting	913.2.01
Silk Screen Lettering Paint	914.2.01
Mast Arm Assemblies	915
Demountable Characters with Type VI Reflective Sheeting	917.2.01
Direct Applied Non-Reflective Characters	917.2.02

1. Handle the clean metal blanks and panels with either a mechanical device or with clean cotton gloves before applying any paint.
2. After the final metal treatment, protect the blanks and panels at all times from contact or exposure to greases, oils, dusts or other contaminants.
3. Get approval for all materials used to fabricate the finished signs according to these Specifications.

910.2.01 Painted Signs

A. Requirements

1. Use paint in fabricating these signs that meets the requirements in this Specification and is of the type specified.

2. Do not paint sign blanks or panels on which reflective sheeting shall be applied.

B. Fabrication

1. Coat the sign blanks or panels on one face and all the edges with one coat of primer. Allow the primer to dry thoroughly.
2. Apply a coat of the specified enamel to the primed face and edges.
   a. Ensure the film is 2.5 mils, ± 0.5 mils (60 µm, ± 10 µm) thick when dry. Determine the thickness with a suitable gauge accurate to 0.1 mil (3 µm).
   b. Apply the paint with either sprayers or rollers.
3. Ensure that the finished paint surface is smooth, uniform, and exhibits neat work quality.
4. Ensure that the paint does not run, curdle, or separate after application.

C. Acceptance

The Department will reject any sign panels or blanks with paint that is not of the proper thickness, or with paint that has run, curdled, or separated after application.

D. Materials Warranty

General Provisions 101 through 150.

910.2.02 Reflective Sheeting Signs

A. Requirements

Use materials that meets the requirements of these Specifications and is of the type specified.

B. Fabrication

1. Apply the reflective sheeting to the face of the sign blank or panel with either an approved vacuum applicator, using a combination of vacuum and heat, or an approved roller process, using heat when necessary.
2. Apply the specified sheeting type and level of reflectivity according to the sheeting manufacturer's recommendations.
3. Splice the sheeting on a sign according to the sheeting manufacturer's recommendations.
4. Age the sheeting for 48 hours.

C. Acceptance

After applying the sheeting properly, test the adhesion to ensure it produces a durable bond equal to or greater than the strength of the reflective sheeting.

1. Ensure that the adhesion is strong enough to resist stripping from the blank when tested with a stiff putty knife.
2. Ensure that no air pockets or bubbles exist between the sheeting and the sign blank.

D. Materials Warranty

General Provisions 101 through 150.

910.2.03 Message

A. Requirements

Ensure that all finished signs have the following characteristics:

- The signs are clear-cut
- The lines of all letters and details true, regular, and free from all waviness, unevenness, and furry edges or lines
- The signs do not have scaling, cracking, pitting, blistering, dents, or blemishes of any kind

- The size, style, and spacing of the letters, numerals, symbols, and borders used to convey the message are according to the details shown in the MUTCD and on the Plans.

See Subsection 107.03, "Patented Devices," if patented materials are used.

B. Fabrication

Ensure that the legends and borders have one coat of silk screen paint as per Subsection 914.2.01.

1. Apply legends and borders by using one of the following processes:
   - Silk screening
   - Reverse screening
   - Directly applying nonreflective, durable, glossy plastic film that meets the requirements of Section 917.
2. Air-dry or oven-bake the sign at a temperature that will not affect the sign.
3. Demountable legends and borders may be used where approved by the Engineer.

NOTE: Attach all demountable legends (letters, numerals, symbols, and borders) to the sign face with pull-through rivets recommended by the manufacturer.

C. Acceptance

The Department will accept finished signs based on quality of workmanship and accuracy of dimensions and message.

D. Materials Warranty

General Provisions 101 through 150.

Section 911—Sign Posts

911.1 General Description

This section includes the requirements for the following:

- Galvanized steel sign posts
- Galvanized steel structural shape posts
- Aluminum structural shape posts
- Delineator posts
- Wood sign posts
- Ground-mounted breakaway sign supports

911.1.01 Related References

A. Standard Specifications

Section 106—Certification of Materials

Section 859—Guard Rail Components

Section 862—Wood Posts and Bracing

Section 863—Preservative Treatment of Timber Products

Section 913—Reflectorizing Materials

B. Referenced Documents

ASTM		
A 1	A709/A 709M	B 221 (B 221M)
A 123/A 123M	A 499	B 308 (B 308M)
A 153/A 153M	A 653/A 653M	B 695
A 193/A 193M	B 209 (B 209M)	B 766
A 307	B 211 (B 211M)	G 53

AASHTO M 181, Section 32

ANSI B 1.13M

ANSI B 18.22.1

AASHTO Standard Specifications for Structural Supports for Highway Signs, Luminaires, and Traffic Signals (current edition)

Georgia Standard No. 9055

Southern Pine Inspection Bureau Grading Rules, 1977 Edition

NCHRP 350

QPL 29

QPL 35

QPL 69

911.2 Materials

911.2.01 Galvanized Steel Sign Posts (Drive Type)

A. Requirements

Use drive-type steel posts made of flanged “U” channel or square tubular sections. For a list of sources, see QPL 35.

1. U-Channel

   Use U-channel posts made of rerolled rail steel or new billet steel that meets the mechanical requirements of ASTM A 499, Grade 60, and the chemical requirements of ASTM A 1 for rails with nominal weights of 91 lbs/yd (45 kg/m) or greater.

   a. Dimensions, Weights, Tolerances: Use the dimensions, weights, and tolerances in Table 1 for U-channel posts, unless otherwise indicated on the Plans.

      1) Use post lengths as specified on the Plans.

      2) Use post assemblies within a sign structure from the same manufacturer.

Table 1—Dimensions, Weights, and Tolerances for Galvanized Steel Sign Posts

(Drive Type)

Outside Diameters	TP 1 in (mm)	TP 2 in (mm)	TP 3 in (mm)	TP 4 in (mm)	Tolerance in (mm)
Flange Width					
a. Rib Back	2.063 (50)	3.125 (80)	3.5 (90)	3.75 (95)	± 0.125 (± 3)
b. Flat Back	2.313 (60)	3.125 (80)	3.5 (90)	3.75 (95)	± 0.125 (± 3)
Depth of “U”					
a. Rib Back	0.875 (22)	1.500 (40)	1.875 (50)	2.000 (50)	± 0.125 (± 3)
b. Flat Back	0.875 (22)	1.500 (40)	1.750 (45)	1.750 (45)	±0.125 (± 3)
Weight per linear foot (meter) before drilling, punching holes, or galvanizing)					
a. Rib Back	1.12 lb (1.7 kg)	2 lb (3 kg)	3 lb (4.5 kg)	4 lb (6 kg)	± 5%
b. Flat Back	1.12 lb (1.7 kg)	2 lb (3 kg)	3 lb (4.5 kg)	4 lb (6 kg)	± 5%

b. Bolt Holes: Ensure the bolt holes are properly punched or drilled with the following characteristics:

1) Holes are 3/8 in (10 mm) diameter and spaced 1 in, ±1/32 in (25 mm, ± 1 mm), center to center.

2) Ensure that the holes start 1 in (25 mm) from the top and extend the full length of the post for Types II, III, and IV, and at least 18 in (450 mm) for Type I.

3) The Department will not accept field-punched holes.

c. Coatings: Ensure that the posts are coated according to ASTM A 123/A 123M after the holes are punched or drilled.

2. Square Tubular

Use square tubular posts that meet the requirements of ASTM A 653/A 653M, Structural Steel, Grade 50, Class 1 (Grade 340, Class 1).

a. Dimensions, Weights, Tolerances: Use the dimensions, weights, and tolerances shown in Table 2 for square tubular posts unless otherwise indicated on the Plans:

Table 2—Dimensions, Weights, and Tolerances for Square Tubular Posts

	TP 5	TP 6	TP 7	TP 8	TP 9	Tolerance
Outside size, in (mm)	1.000 (25)	1.7 50 0(45)	2.000 (50)	2.500 (63)	2.250 (57.2)	± 0.010 (0.3)
Wall thickness, in (mm)	0.0 65 (1.7)	0.083 (2.1)	0.083 (2.1)	0.105 (2.7)	0.083 (2.1)	± 0.010 (0.2)
Weight before drilling/ punching holes or galvanizing, lb/ft (kg/m)	0.83 (1.2)	1.8 (2.7)	2.1 (3.1)	3.4 (5.1)	2.27 (3.4)	± 5%

1) Use post lengths as specified on the Plans.

2) Use post assemblies within a sign structure from the same manufacturer.

b. Bolt Holes: Ensure all bolt holes are properly punched or drilled with the following characteristics:

1) Holes are 7/16 in, ± 1/64 in (11 mm, ± 0.5 mm) diameter and spaced 1 in, ± 3/64 in (25 mm, ± 1 mm) center to center.
2) Ensure that the holes start 1 in (25 mm) from the top and extend the full length of the post on all four sides for Types 6, 7, and 8, and at least 18 in (450 mm) on all four sides for Type 5.
3) The Department will not accept field-punched holes.

c. Coatings: Coat square tubular posts with zinc at a minimum thickness of 0.90 oz/ft2 (275 g/m2).

3. Bolts, Nuts, and Washers

Use bolts, nuts, metallic washers, and spacers made of aluminum, stainless steel, or galvanized steel. Use stainless steel that meets the requirements of ASTM A 193/A 193M, Type B8.

a. Bolts: Use bolts 5/16 in (8 mm) diameter with hexagonal heads. Ensure they are long enough to extend at least 0.25 in (6 mm) beyond the nut when installed.
   1) Use a bolt thread fit of ANSI B 1.13M, Class 6H.
   2) If using aluminum bolts, ensure that the aluminum meets the requirements of ASTM B 211 (B 211M), Alloy 2024-T4.

b. Nuts: Use self-locking, plastic-insert hex nuts.
   1) Use a bolt thread fit of ASNI B 1.13, Class 6G.
   2) If using aluminum bolts, ensure that the aluminum meets the requirements of ASTM B 211(B 211M), Alloy 2017-T4.

c. Washers: Place metallic washers under all bolt heads. Place nylon washers between the metallic washer and the sign face.
   1) If using aluminum washers, ensure that the aluminum meets the requirements of ASTM B 209 (B209M), Alloy 2024-T4.
   2) Use aluminum washers with 25/64 in (10 mm) inside diameter, 0.75 in (19 mm) outside diameter, and 0.091 in (2.3 mm) thick.
   3) Use standard galvanized and stainless steel washers that meet the size requirements of ANSI B 18.22.1.
   4) Use nylon washers with 13/32 in (10 mm) inside diameter, 13/16 in (21 mm) outside diameter, and 1/16 in (1.6 mm) thick. Use nylon washers in combination with metallic washers to prevent torsional damage caused by the twisting action of the bolt heads.

d. Coatings: Use galvanized steel bolts and nuts that meet ASTM A 307 requirements.

B. Fabrication

1. Roll or form post sections of the dimensions specified.
2. Round all sharp corners and make rough or burred parts smooth.
3. Punch or drill holes as specified in Subsection 911.2.01.A.1.b.
4. Galvanize as necessary, according to ASTM A 153/A 153M.

C. Acceptance

Get approval for each sign support matrix from the FHWA.

The FHWA evaluates the matrix according to the AASHTO Standard Specifications for Structural Supports for Highway Signs, Luminaries, and Traffic Signals, current edition.

D. Materials Warranty

General Provisions 101 through 150.

911.2.02 Galvanized Steel Structural Shape Posts

A. Requirements

1. Ensure that the galvanized steel shapes for sign posts match the shape and dimensions shown on the Plans.
   a. Use steel that meets the requirements of ASTM A 709 (A 709M) Grade 36 (245).
   b. Galvanize the shapes according to ASTM A 123/A 123M. Handle the structural shape through only one hole during galvanizing.
2. Submit a certification according to Subsection 106.05, “Materials Certification.”

B. Fabrication

General Provisions 101 through 150.

C. Acceptance

General Provisions 101 through 150.

D. Materials Warranty

General Provisions 101 through 150.

911.2.03 Aluminum Structural Shape Posts

A. Requirements

1. Ensure that the aluminum shapes for sign posts match the shape and dimensions shown on the Plans.

NOTE: Use aluminum that meets the requirements of ASTM B 308/B 308M, Alloy 6061-T6.

2. Submit a certification according to Subsection 106.05, “Materials Certification.”

B. Fabrication

General Provisions 101 through 150.

C. Acceptance

General Provisions 101 through 150.

D. Materials Warranty

General Provisions 101 through 150.

911.2.04 Delineator Posts

A. Requirements

1. Check the Plans for the types of delineator posts to use. For a list of sources, see QPL 69.
2. If using flexible delineator posts, use only those indicated on the Georgia Department of Transportation Qualified Products List.
3. Mounting

   Fasten all delineators to be mounted on galvanized or aluminum posts with commercial aluminum lock bolts.

NOTE: Fasten delineators to be mounted on wood posts with galvanized wood screws.

4. Galvanized Steel Posts

Use posts that meet the requirements of Subsection 911.2.02.A.

5. Aluminum Flange Type Posts

   Use aluminum that meets the requirements of ASTM B 221 (B 221M), Alloy 6063-T6.

   a. Provide a post section in the form of a flanged "U" with dimensions shown on the Plans. Point the bottom of the post.

   b. Punch or drill holes as specified in Subsection 911.2.01.A.1.b.

6. Wood Delineator Posts

   Use 4 in (100 mm) square posts of the length specified on the Plans.

   a. Use wood posts that meet the requirements of Subsection 862.2.02.

   b. Treat wood posts with preservative according to Section 863.

7. Flexible Delineator Posts

   Use posts made of a durable plastic or poly resin material. Check the Plans to see the type of flexible delineator post used for each location.

   a. Physical Characteristics: Use posts that can either be driven into the ground with equipment that does not damage the posts or reflective sheeting, or be surface-mounted onto pavement.

      1.) Drill or form pilot holes where necessary to embed the posts as shown on the Plans.

      2) Classify flexible delineator posts as follows:

Type I	Curved or flat
A	Soil mount
B	Surface mount
Type II	Tubular
A	Soil mount
B	Surface mount

      3) Use durable, flexible, non-discoloring posts that can recover from repeated vehicle impacts.

      4) Ensure that materials used to manufacture flexible delineator posts are stabilized with UV (ultraviolet) inhibitors to prevent degradation.

      5) Ensure that the posts are inert to normal atmospheric elements and chemicals possibly used in grass or weed control.

      6) Use material for the post that can accept reflective sheeting.

   b. Color: Use gray, white, or yellow posts, as required.

   c. Reflective Sheeting: Use white or yellow reflective sheeting on the posts as required.

      Use sheeting that meets the requirements of Subsection 913.2.01, Type III.

      Obtain approved reflective sheetings from QPL 29.

   d. Certification: Submit a certification from the manufacturer that the flexible delineator posts are formulated of the same material as when tested by National Transportation Product Evaluation Program (NTPEP) and will meet the requirements of this Specification.

B. Fabrication

General Provisions 101 through 150.

C. Acceptance

1. Performance Criteria

   Get approval for flexible delineator posts through the evaluation performed by NTPEP.

The Department will use the data generated by the NTPEP testing to select usable materials that performed satisfactorily when tested with the following material and field tests.

2. Shapes and Dimensions (Materials Test)
   a. Ensure that flexible delineator posts are curved, flat, or tubular with the upper 14 in (350 mm) presenting at least a 3 in (75 mm) wide profile facing approaching traffic.
   b. Place the top of the wide profile sheeting 0.5 in (13 mm) from the top of the delineator post.
   c. Cap the top of tubular posts to prevent water inclusion.
   d. Design flexible delineator posts that are soil mounted to connect with a drive-type anchor base made of corrosion-resistant material. When a post is no longer serviceable, remove it and replace it in the same anchor base.
   e. Ensure that the minimum length for the anchor base is 18 in (450 mm) and the minimum height above ground for the soil mount flexible delineator posts is 48 in (1200 mm).
   f. Design surface-mount flexible delineator posts to connect with the base assembly and be easily replaced when the existing post is no longer serviceable. Use post heights of 24 in (600 mm), 36 in (900 mm), or 48 in (1200 mm), as required.
3. Weathering (Materials Test)
   a. Ensure that flexible delineator posts withstand 1,000 hours of UV exposure in the QUV weatherometer without significant color change or physical deterioration. If the Department sees splitting, cracking, delaminating, or other failures, it will reject the delineator post.
   b. The Department will conduct the test according to ASTM G 53.
4. Field Tests

   Perform impact tests on the flexible delineator posts as described below:
   a. Install 8 delineator posts in 2 rows of 4 each so that 1 row will be bumper hits and 1 row will be wheel hits in 1 pass of the vehicle.
   b. Set the delineator post with a height of 48 in, ± 1 in (1200 mm, ± 25 mm) from ground level with the reflective sheeting facing the test vehicle.
   c. Use a standard American sedan or pickup for the test vehicle. Ensure that the vehicle has no unusually sharp hood ornaments or other appurtenances.
   d. Impact 8 delineator posts 10 times with the test vehicle at 55 mph (90 kph)
   e. Hit the posts five times at an ambient temperature of 32 °F, ± 5 °F (0 °C, ± 2 °C) and five times at an ambient temperature of 85 °F, ± 5 °F (30 °C, ± 2 °C).
   f. After concluding the impact test, ensure that at least 5 of the 8 posts remain intact, are securely anchored, and return to their original vertical orientation within an angle of ±10 degrees.
   g. Of the 5 posts that remain intact, ensure that they also retain at least 50 percent of their reflective sheeting and show minimal signs of distress (cracking, loss of rigidity).
5. The Department will place flexible delineator posts that pass the laboratory material test and field test requirements on the approved list.

D. Materials Warranty

General Provisions 101 through 150.

911.2.05 Wood Sign Posts

A. Requirements

1. Use wood sign posts to support special signs, when noted on the Plans. Use posts that comply with Georgia Standard No. 9055.
2. Treat the posts with preservative according to Section 863 and Standard No. 9055 notes.

3. Use wood that matches that specified in Subsection 859.2.04, except that it shall meet the grading requirements for No. 1 SR or No. 2 SR as specified in the current Southern Pine Inspection Bureau Rules.

B. Fabrication

General Provisions 101 through 150.

C. Acceptance

General Provisions 101 through 150.

D. Materials Warranty

General Provisions 101 through 150.

911.2.06 Ground Mounted Breakaway Sign Supports

A. Requirements

1. Use ground-mounted breakaway sign supports of any assembly approved by the Department as a breakaway foundation. For a list of sources, see QPL 63.
2. Design the support to modified AASHTO wind loads of 70 mph (112 kph).
3. Certification

   Furnish a copy from the manufacturer of an independent testing agency report showing that the support has been dynamically tested according to AASHTO Standard Specifications for Highway Signs, Luminaires, and Traffic Signals, current edition.

   a. Furnish evidence that the support has been tested and has met the criteria established in NCHRP 350.
   b. Supply a certification showing the physical properties of the material and how it meets the Specifications, as stated in Subsection 106.05, “Materials Certification.”
   c. Show evidence that the assembly has been used successfully in installations with similar environmental and Project conditions to the satisfaction of the Department.
4. Sign Support Design
   a. Type A: A single-post mount that can support a 7 ft^2 (0.65 m^2) sign mounted to the centroid 9 ft (2.7 m) above ground.
   b. Type B: A two-post mount that can support a 18 ft^2 (1.67 m^2) sign mounted to the centroid 9 ft (2.7 m) above ground.
   c. Type C: A three-post mount that can support a 37 ft^2 (3.4 m^2) sign mounted to the centroid 9 ft (2.7 m) above ground.
5. Base Assembly
   a. Ensure that the furnished base assembly protrudes no more than 4 in (100 mm) above ground.
   b. Ensure that the foundation assembly is compatible with the applicable sign post in Subsection 911.2.01.
   c. Ensure that the assembly is galvanized with the hot-dip method as per ASTM A 123/A 123M or an approved equal.
   d. To use an alternate protective coating, obtain approval from the Office of Materials before using it on Department Projects.
6. Assembly Hardware
   a. Use base attachment hardware that matches the Plans and is as recommended by the manufacturer.
   b. Ensure that the hardware is protectively coated as in ASTM A 153/A 153M, ASTM B 695 Class 55, or ASTM B 766 Type II, class 12-, whichever is applicable.

B. Fabrication

General Provisions 101 through 150.

C. Acceptance

Use foundation assemblies that are FHWA-approved for the specific design category for which the unit was evaluated.

Foundation assemblies are evaluated according to AASHTO Standard Specifications for Highway Signs, Luminaires, and Traffic Signals, current edition.

D. Materials Warranty

General Provisions 101 through 150.

Section 912—Sign Blanks and Panels

912.1 General Description

This section includes the requirements for aluminum sign blanks and panels, and extruded aluminum sign panels.

912.1.01 Related References

A. Standard Specifications

General Provisions 101 through 150.

B. Referenced Documents

ASTM B 108

ASTM B 209 (B 209M)

ASTM B 221 (B 221M)

ASTM F 467 (F 467M)

ASTM F 468 (F 468M)

ASTM B 211 (B 211M)

912.2 Materials

912.2.01 Aluminum Sign Blanks

A. Requirements

1. Use aluminum sign blanks of the type, size, and shape specified:
   a. Type I: Signs with an area of 9 ft² (0.84 m²) or less, at least 0.08 in, ± 0.005 in (2 mm, ± 0.125 mm) thick.
   b. Type II: Signs with an area more than 9 ft² (0.84 m²), at least 0.10 in, ± 0.006 in (2.5 mm, ± 0.150 mm) thick.
2. Use metal for the sign blanks that meets the requirements of ASTM B 209 (B 209M), Alloy 6061-T-6 or 5052-H38.
3. See Table 1 for locations of bolt holes in the sign blanks. Punch or drill bolt holes 10 mm diameter. The table shows where the holes are located for each type and size of blank.
4. Submit to the Engineer at least 1 ft² (0.1 m²) of the sign material for each lot or shipment of each type.

Table 1—Bolt Hole Locations for Sign Blanks and Panels

1. Diamond-Shaped Blanks	
Size	**Number of Holes Required and Spacing**
24 in (600 mm)	2 holes, 12 in (300 mm) from center on diagonal line
30 in (750 mm)	2 holes, 15 in (375 mm) from center on diagonal line
36 in (900 mm)	2 holes, 18 in (450 mm) from center on diagonal line
48 in (1200 mm)	4 holes, 2 on each side 15 in (375 mm) from both vertical and horizontal center line
2. Square Shaped Blanks	
All sizes to 36 (900 mm)	2 holes, 3 in (75 mm) from edge in center of opposite sides
36 in (900 mm)	2 holes, 6 in (150 mm) from edge in center of opposite sides

NOTE: Drill or punch 24 in (600 mm), 30 in (750 mm), and 36 (900 mm) diamond and square blanks for use as either type.

3. Rectangular Sign Blanks	
Up to 48 in x up to 15 in (1200 mm x up to 375 mm)	4 holes, 1.5 in (38 mm) from the edge in the center of each side
Up to 48 in x 18 – 24 in(1200 mm x 450 - 600 mm)	4 holes, 3 in (75 mm) from the edge in the center of each side
36 (900) x 48 (1200 mm)	4 holes, 6 in (150 mm) from edge at 6 in (150 mm) from top and bottom edges
48 x 36 in (1200 x 900 mm) and 48 x 60 in (1200 x 1500 mm)	4 holes, 9 in (225 mm) from edge at 6 in (150 mm) from top and bottom edges
Over 48 x 12 in (1200 x 300 mm)	4 holes, 1/6 horizontal dimension from edge at 1.5 in (38 mm) from top and bottom edges
Over 48 x 24 in (1200 x 600 mm)	4 holes, 1/6 horizontal dimension from edge at 3 in (75 mm) from top and bottom edges
Over 48 x over 36 in (1200 x over 900 mm)	4 holes, 1/6 horizontal dimension from edge at 6 (150 mm) from top and bottom edges
4. Octagonal Sign Blanks	
30 x 30 in (750 x 750 mm) and 36 x 36 (900 x 900 mm)	2 holes, 3 in (75 mm) from edge on vertical center line
48 x 48 in (1200 x 1200 mm)	4 holes, 2 on each side, 15 in (375 mm) from both vertical and horizontal center lines
5. Triangular Sign Blanks (with point down)	
36 in (900 mm)	2 holes on vertical center line, spaced 3 in (75 mm) and 24 in (600 mm) from the top
48 in (1200 mm)	2 holes on vertical center line, spaced 4 in (100 mm) and 28 in (700 mm) from the top
60 in (1500 mm)	4 holes, 2 each 15 in (375 mm) from vertical center line, 3 in (75 mm) and 21 in (525 mm) from top

6. Circular Sign Blanks	
30 in (750 mm)Diameter	2 holes on vertical center line 12 in (300 mm) from center
36 in (900 mm) Diameter	2 holes on vertical center line 15 (375 mm) from center
7. Interstate Route Shield Blanks	
24 x 24 in (600 x 600 mm) and 30 x 24 in (750 x 600 mm)	2 holes on vertical center line spaced 3 in (75 mm) and 21 in (525 mm) from top
36 x 36 in (900 x 900 mm) and 45 x 36 in (1125 x 900 mm)	2 holes on vertical center line spaced 6 in (150 mm) and 30 (750 mm) from top
8. Isosceles Triangular Sign Blanks (with point to the right)	
30 x 40 x 40 in (750 x 1000 x 1000 mm)	2 holes, each 12 in (300 mm) from left edge, 7.5 in (188 mm) from horizontal center line
36 x 48 x 48 in (900 x 1200 x 1200 mm)	2 holes, each 15 in (375 mm) from left edge, 9 in (225 mm) from horizontal center line
9. Pentagonal Sign Blanks (with point up)	
30 in (750 mm)	2 holes on vertical centerline, spaced 3 in (75 mm) and 24 in (600 mm) from bottom edge
36 in (900 mm)	2 holes on vertical centerline, spaced 3 in (75 mm) and 27 (675 mm) from bottom edge

B. Fabrication

1. Complete all fabrication, including shearing, cutting, and drilling or punching holes, before treating the metal and applying the face material.
2. Cut the metal blanks to size and shape. Ensure that the blanks are free of buckles, warp, dents, cockles, burrs, and defects resulting from fabrication.
3. Finish each face of the blank to be a plain surface and flat.
4. Metal Treatment

   Use conversion coating or anodizing to finish the metal before painting or applying the reflective sheeting.

   a. Ensure the finished sign blank or panel has a uniform, light-colored appearance, without splotches or stains.
   b. If the finishing procedure produces an iridescent color, ensure that the shade is uniform.
   c. Thoroughly clean the metal before finishing.
      1) Begin cleaning with an etch-type alkaline cleaner or with a vapor degreaser, using a trichloroethylene or perchloroethylene solvent.
      2) Use the cleaner according to the manufacturer's specifications.
      3) After using an alkaline etching cleaner, treat the metal with an acid solution or desmutting compound. Use the desmutting agent according to the manufacturer's specifications.
   d. Finish: Finish the metal with a chromate conversion coating or by anodizing with a chromic acid anodizing solution. Use the conversion coating compound according to the manufacturer's specifications.
   e. Handling: Carefully handle the metal with a device or with clean cotton gloves between all cleaning and finishing operations and before applying the finish material.

      Be sure that the metal never comes in contact with greases, oils, dust, or other contaminants before you apply the finish material.

C. Acceptance

The Department will accept the sign blanks based on results of chemical and physical tests on the materials, approval of methods and procedures for metal treatment, and acceptable quality of work of the finished blank.

D. Materials Warranty

General Provisions 101 through 150.

912.2.02 Extruded Aluminum Sign Panels

A. Requirements

1. Use extruded aluminum sign panels close to the shape and size shown on the Plans.
2. Ensure that the aluminum meets the requirements of ASTM B 221 (B 221M), Alloy 6063-T6 or 6061-T6.
3. Accessories

   Ensure that the accessories for fabricating the signs meet the following:

   a. Bolts: Use bolts for connecting the panels that are 3/8 in (M10x1.5), tolerance grade 16 UNC 2A thread (6G threads), and 3/4 in (19 mm) long. Use bolts that meet the requirements of ASTM F 468 (F 468M), Alloy 2024-T4.
   b. Hex Nuts: Use hex nuts with tolerance grade 4 threads that meet the requirements of ASTM F 467 (F 467M), Alloy 6061-T6.
   c. Washers: Use washers that meet the requirements of ASTM B 209 (B 209M), Alloy 2024-T4.
   d. Posts Clips: Use clips as shown on the Plans and that meet the requirements of ASTM B 108, Alloy 356-T6.
   e. Post Clip Bolts: Use bolts that are 3/8 in (M10x1.5), tolerance grade 16 UNC 2A thread (6G threads), and 1-3/4 in (44 mm) long, and meet the requirements of ASTM F 468 (F 468M), Alloy 2024-T4.
   f. Post Clip Nuts: Use hex locknuts that meet the requirements of ASTM B 211(B 211M), Alloy 2017-T4.
   g. Post Clip Washers: Use washers that meet the requirements of ASTM B 209 (B 209M), Alloy 2024-T4.
4. Tolerances

   Ensure that the sections are within the established commercial tolerances of the aluminum industry.

   a. Ensure that all panels 6 in (150 mm) wide have a nominal weight of 1.115 lb/ft (1.7 kg/m). Use these sections only at the top of signs that do not conform to 1 ft (300 mm) modules.
   b. Ensure that all panels 1 ft (300 mm) wide have a nominal weight of 2.707 lb/ft (4.0 kg/m). Use these sections as the normal sign panel.
   c. Before supplying an alternate extruded panel section of equal or greater section moduli with dimensions suitable to use hardware, as shown on the Plans, obtain written approval from the Engineer.
5. Submit to the Engineer at least 1 ft^2 (0.1 m^2) of the sign material for each lot or shipment of each type.

B. Fabrication

1. Make the extruded panel signs as shown on the Plans.
2. Finish the extruded panels as specified in Subsection 912.2.01.B.4.

C. Acceptance

The Department will accept these sign panels based on results of chemical and physical tests of materials, approval of methods and procedures for metal treatment, and the quality of workmanship on the finished panel.

D. Materials Warranty

General Provisions 101 through 150.

Section 913—Reflectorizing Materials

913.1 General Description

This section includes the requirements for reflective sheeting.

913.1.01 Definitions

Reflective Sheeting Types:

Type I: Medium-intensity retroreflective sheeting (engineering grade) that is typically an enclosed lens glass-bead retroreflective material.

Type II: Medium-high-intensity retroreflective sheeting (super engineering grade), that is typically enclosed lens glass-bead retroreflective material.

Type III: High-intensity retroreflective sheeting that is typically an encapsulated glass-bead retroreflective material or an unmetalized microprismatic retrotreflective element material.

Type IV: High-intensity retroreflective sheeting that is typically an unmetallized microprismatic retroreflective element material.

Type V: Super-high-intensity retroreflective sheeting that is typically a metallized microprismatic retroreflective element material. This material is typically used for delineators.

Type VI: Elastomeric high-intensity retroreflective sheeting without adhesive that is typically a vinyl microprismatic retroreflective material. This material is typically used for orange temporary roll up signs.

Type VII: Super-high-intensity retroreflective sheeting that is typically an unmetallized microprismatic retroreflective element material.

Type VIII: Super-high-intensity retroreflective sheeting that is typically an unmetallized microprismatic retroreflective element material.

Type IX: Very-high-intensity retroreflective sheeting that is typically an unmetallized microprismatic retroreflective element material.

Type X: Super-high intensity retroreflective sheeting that is typically an unmetallized microprismatic retroreflective element material.

Type XI: Very-high-intensity retroreflective sheeting that is typically an unmetalized cube corner microprismatic retrotreflective element material.

913.1.02 Related References

A. Standard Specifications

General Provisions 101 through 150.

B. Referenced Documents

ASTM D 4956

QPL 29

913.2 Materials

913.2.01 Type I, II, III, IV, V, VI, VII, VIII, IX, X, and XI Reflective Sheeting

A. Requirements

1. Use reflective sheeting that meets the requirements of ASTM D 4956.
2. Use reflective sheeting as listed in QPL 29.
3. Use reflective sheeting that has been evaluated by the National Transportation Product Evaluation Panel (NTPEP) test facility or other approved test facility.

4. Submit the following to the Department:
   a. A certificate with each lot or shipment stating the following:
   - The material supplied will meet all the test requirements listed herein.
   - You have performed the specified tests to ensure compliance.
   - You will submit test results upon request.

B. Fabrication

General Provisions 101 through 150.

C. Acceptance

1. The Engineer will reject reflective sheeting in the following situations:
   a. The material fails to meet any on of the designated requirements.
   b. The material meets the requirements but later fails during sign fabrication or in actual field use. Cracks, wrinkles, delamination, color change, or abnormal loss of reflectivity constitute failure.
   c. Natural causes deteriorate the material to the extent that:
      1) The sign is ineffective for its intended purpose as defined in Subsection 913.2.01.C.1.b above.
      2) The average nighttime reflective brightness is less than 70% of the values specified in Table 1 or Table 2.

D. Materials Warranty

Transfer to the Department a performance warranty for Type I, II, III, IV, V, VI, VII, VIII, IX, X, or XI reflective sheeting issued by the manufacturer.

Ensure that the warranties cover the full replacement cost, including material and labor.

Include in these warranties a provision that the warranty is subject to a transfer to the Department.

Submit a warranty from the manufacturer that states that the reflective sheeting—processed, applied to sign blank materials, and cleaned—meets the outdoor weathering photometric requirements of ASTM D 4956.

Section 914—Sign Paint

914.1 General Description

This section includes the requirements for opaque silk screen lettering paint and transparent process colors intended for fabricating high quality, durable reflective signs and emblems by screen processing, spraying, roll coating, or hand brushing.

914.1.01 Related References

A. Standard Specifications

General Provisions 101 through 150.

B. Referenced Documents

ASTM G 23, Type D

ASTM D 822

914.2 Materials

914.2.01 Silk Screen Lettering Paint

A. Requirements

1. Process Colors

   Use process colors and toner that are weather resistant and designed for use on reflective sheeting.

   a. You may tone or blend process colors to make the desired color, but supply each color ready-mixed to a smooth, uniform texture.

   b. If painting on reflective sheeting, use only paint recommended by the sheeting manufacturer.

2. Submittals

   a. Submit a 1/2-pint (0.25L) sample of each color paint from each lot to be used.

   b. Submit to the Engineer a certificate from the fabricator stating that the paint used on the Project signs is recommended by the sheeting manufacturer and is of the same lot as the test sample.

3. Color and Transparency

   Ensure that the transparent colors have the following characteristics when processed, according to the manufacturer's instructions, through a 10XX screen onto silver-white reflective sheeting background:

   a. Produce a true color under both diffuse and reflected light.

   b. Match the color samples submitted by the Engineer.

   c. Allow good reflective brilliance of the processed sheeting.

4. Process Color and Toner

   Use process colors that flow out and dry to a tough, smooth, glossy surface free of defects, pattern, non-wet spots, and have a sharp edge (screen processed).

   Ensure that the process colors have the following characteristics when applied according to the manufacturer's instructions:

   - Have an appropriate viscosity for the purpose intended.
   - Dry to a solid film in 24 hours at 77 °F (22 °C) and 50 percent relative humidity.
   - Withstand curing at temperatures up to 150 °F (66 °C) for 4 hours without adverse effect or embrittlement.
   - Be removable with a recommended solvent before it thoroughly dries, without damaging the reflective sheeting.

5. Durability

   1) Use weather-resistant colors when processed through a 10XX screen and finished according to the recommended procedures.

   2) After cleaning, ensure that the material meets the following requirements:

      - No appreciable color change
      - No loss by either diffuse or reflected light
      - No significant change in transparency when exposed to accelerated weathering for 100,000 Langleys, facing south, unprotected at 45 degrees in south Florida; or 1,000 hours Atlas Twin Arc Weathering (ASTM G 23, Type D) as per ASTM D 822.

   3) After accelerated exposure, ensure that no process color can be removed when tested by scratching through the surface, applying cellophane tape over the scratched area, and removing the tape with one quick motion.

B. Fabrication

1. When using color silk screen paint other than black, thoroughly stir the paste before use and frequently during use. Stir especially when using reverse silk screening.
2. Ensure that the finished silk screen has no streaks. If the paint has streaks, the Engineer or Inspector will reject it.
3. Apply the paste on the silk screen with a rubber squeegee that is as wide as the sign.

C. Acceptance

The Engineer will approve the lettering paint based on the results from the color, transparency, viscosity, dry time, and removability tests from submitted paint samples.

D. Materials Warranty

Storage and Packaging: Ensure that the material in storage for up to one year does not skin, settle, change color, thicken, or liver so that normal mixing procedures do not return the material to the proper consistency and texture.

Section 915—Mast Arm Assemblies

915.1 General Description

This section includes the requirements for steel posts, arms, and guy wires and cable for mast arm assemblies.

915.1.01 Related References

A. Standard Specifications

Section 106—Control of Materials

B. Referenced Documents

ASTM A 53/A 53M

ASTM A 475

Federal Specification FF-T-2765, Type III

QPL 72

915.2 Materials

915.2.01 Steel Posts and Arms for Mast Arm Assembly

A. Requirements

a. Use steel posts and arms of the dimensions shown on the Plans and that meet the requirements of ASTM A 53 for Type E or S, Grade B with a galvanized finish.

b. Use pipe of weight class XS, schedule No. 80. Do not use the hydrostatic test requirements.

c. Submit a certification to the Engineer from the manufacturer that the materials meet the requirements of this section.

B. Fabrication

General Provisions 101 through 150.

C. Acceptance

The Engineer will accept the material based on the certification, according to Subsection 106.05, “Materials Certification,” and on results of galvanized coating tests made by the Department.

D. Materials Warranty

General Provisions 101 through 150.

915.2.02 Guy Wires and Cable

A. Requirements

a. Use guy wires for mast arm assemblies and cable for overhead sign assemblies of the dimensions shown on the Plans and that meet the requirements of ASTM A 475, Siemens-Martin Grade, with Class A coating.

b. Provide extra heavy wire rope thimbles that meet Federal Specification FF-T-2765, Type III for each end of the cable.

c. Submit a certificate from the manufacturer according to Subsection 106.05, “Materials Certification.”

For a list of sources, see QPL 72.

B. Fabrication

General Provisions 101 through 150.

C. Acceptance

The Engineer will accept the material based on the certificate.

D. Materials Warranty

General Provisions 101 through 150.

Section 916—Delineators

916.1 General Description

This section includes the requirements for center mount reflector delineators.

916.1.01 Related References

A. Standard Specifications

General Provisions 101 through 150.

B. Referenced Documents

General Provisions 101 through 150.

916.2 Materials

Definitions for Optical Requirements: Use the following definitions in this Specification:

1. Entrance Angle

   The angle at reflector between direction of light incident on it and direction of reflector axis.

2. Observation Angle

   The angle at reflector between observer's line of sight and direction of light incident on reflector.

3. Specific Intensity

   Candlepower/footcandle (mcd) returned at the chosen observation angle by a reflector for each footcandle (lux) of illumination at the reflector.

916.2.01 Center Mount Reflector Delineators

A. Requirements

1. Use a reflector delineator made of a hermetically sealed, acrylic plastic, prismatic reflex reflector with a single grommetted hole.
2. Submit 50 delineators of each color to be used on the Project to the Department for testing.
3. Acrylic Plastic Reflector

   Use an acrylic plastic reflector. Submit to the Department the manufacturer of the raw material and the identification number of the particular molding compound to be furnished.

   a. Ensure that the reflector has the following characteristics:
      - A clear, transparent plastic face with at least 6.5 in² (4200 mm²) of reflective area (the lens)
      - A heat-scalable plastic back fused to the lens under heat and pressure around the entire perimeter of the lens and the central mounting hole
      - A unit permanently sealed against dust, water, and water vapor

   b. Use a crystal (colorless), amber, or red reflector, as specified on the Plans.

   c. Ensure that the lens has the following characteristics:
      - A smooth surface without projection or indentations other than a central mounting hole and identification number
      - A rear surface bearing a prismatic configuration that will affect total internal reflection of light
      - The manufacturer's trademark molded legibly into the lens face
4. Specific Intensity

   Ensure that the specific intensity of each reflex reflector used in delineators or markers equals or exceeds the following minimum values, regardless of reflector orientation.

Observation Angle	Entrance Angle	Specific Intensity, candlepower per footcandle (mcd per lux)		
Degrees	Degrees	Crystal	Amber	Red
0.1	0	119	71	29
0.1	20	47	28	11

B. Fabrication

General Provisions 101 through 150.

C. Acceptance

1. The Engineer will accept the material based on test results (optical, seal, and heat resistance) of samples taken by the Department.

   The Department will return undamaged delineators to the Contractor.
2. Optical Test

   a. Place the reflex reflector to be tested about 100 ft (30 m) from a single light source that has an effective diameter of 2 in (50 mm). Operate the light source at normal efficiency.

NOTE: If using a test distance other than 100 ft (30 m), modify all other dimensions for this test in the same proportion as the test distance.

   b. Measure the return light from the reflector with a photoelectric photometer that has a minimum sensitivity scale of 1×10^{-7} footcandles/mm (1×10^{-6} lux/mm).

NOTE: Use a photometer with a receiver aperture 0.5 in (13 mm) diameter, shielded to eliminate stray light.

c. Place the light source center 2.1 in (53 mm) from the aperture center for a 0.1 degree observation angle.

d. During testing, spin the reflectors to average the orientation effect.

e. The Department will reject a tested reflector if it fails the specific intensity minimum. If more than 2 reflectors fail out of 50 tested, the Department will reject the lot.

3. Seal Test

Use this test to determine if a reflector is adequately sealed against dust and water.

a. Submerge 50 samples in a water bath at room temperature.

b. Subject the submerged samples to a vacuum of 5 in (125 mm) gauge for 5 minutes.

c. Restore atmospheric pressure and leave the samples submerged for 5 minutes.

d. Examine the samples for water intake.

e. The Department will reject the lot if more than 2 percent of the reflectors fail.

4. Heat Resistance Test

a. Place three reflectors in a horizontal position on a grid or perforated shelf inside a circulating oven that allows air to circulate freely.

b. Set the oven temperature at 175 °F, ± 5 °F (80 °C, ± 3 °C) and let the specimens sit at this temperature for 4 hours.

c. After the 4 hours, remove the samples from the oven and let them cool in air to room temperature.

d. Rejection: The Department will reject the lot if any sample shows significant change in shape and general appearance when compared with unexposed control standards.

D. Materials Warranty

General Provisions 101 through 150.

Section 917—Reflectors and Nonreflective Characters

917.1 General Description

This section includes the requirements of demountable characters with Type VI reflective sheeting, and direct-applied, nonreflective characters.

917.1.01 Related References

A. Standard Specifications

Section 106—Certification of Materials

Section 913—Reflectorizing Materials

B. Referenced Documents

ASTM B 209 (B 209M)

ASTM D 822

917.2 Materials

917.2.01 Demountable Characters with Type IX Reflective Sheeting

A. Requirements

1. Use Type IX reflective sheeting letters, numerals, symbols, and borders that meet the requirements of Subsection 913.2.02, Type IX.
2. Use a silver color, unless otherwise specified on the Plans.
3. Apply the characters to aluminum flat frames as recommended by the sheeting manufacturer.
4. Use flat frames (letter, numerals, symbols and borders) made from aluminum sheet 0.032 in (0.813 mm) thick matching ASTM B 209 (209M), Alloy 3003-H14.
5. Submit to the Department:
    - One letter of a predominant size and type to be used on the Project.
    - A certificate to the Engineer stating that the material used on the Project is the same as the sample submitted.

B. Fabrication

1. Before applying any sheeting, properly degrease, etch, and treat each frame with a light, tight amorphous chromate-type coating.
2. Mechanically apply the reflective sheeting to the prepared flat aluminum frames. Use the proper equipment as prescribed by the sheeting manufacturer.
3. When recommended by the sheeting manufacturer, coat the completed demountable letters, numerals, symbols and borders with a clear finish approved by the sheeting manufacturer.

   Apply the clear coat to the sheeting surface to ensure the sheeting has a fully glossy coat and a complete edge seal.
4. Ensure that the finished letters, numerals, symbols, and borders show careful workmanship, are clean cut, sharp, and have a plane surface.
5. Use the character size and shape to determine the hole spacing to mount the frame with aluminum rivets or other approved non-corrosive fasteners. Do not space holes more than 8 in (200 mm) on center.

C. Acceptance

The Department will accept the material based on test results of samples taken by the Department or of samples submitted by the manufacturer or fabricator, when directed. The sample shall consist of one letter of predominant size and type to be used on the Project. Samples submitted by the manufacturer or fabricator to the Engineer, shall include a certificate stating that the material used on the Project is the same as the sample submitted.

D. Materials Warranty

General Provisions 101 through 150.

917.2.02 Direct Applied Nonreflective Characters

A. Requirements

1. Use direct-applied, nonreflective characters as opaque legend, stripping, and symbols on traffic control signs made from reflective sheeting that meets Subsection 913.2.
2. Use nonreflective, weatherproof plastic film that is precoated with pressure-sensitive or heat-sensitive adhesive backing.
3. Use sheeting that is flexible enough to be easily cut, shaped, and applied over reflective sheeting.
4. Submit the manufacturer's certification to the Engineer showing the properties of the materials used and how they match the Specifications, as required by Subsection 106.05, "Materials Certification."
5. Ensure that the nonreflective sheeting is weather resistant after processing and application, according to the manufacturer's recommended procedures.
   a. Expose the nonreflective sheeting for 1,200 hours in an Atlas Twin Arc Weatherometer, as per ASTM D 822.
   b. Clean the sheeting.
   c. The Department will reject nonreflective sheeting that appreciably discolors, cracks, crazes, blisters, changes dimensionally, or adversely effects the reflective sheeting on which it is mounted.
6. Use adhesive that has the following characteristics:
   - Is precoated and pressure-sensitive (Class 1) or tack-free and heat-activated (Class 2). Be able to apply either without adding more adhesive to either the nonreflective sheeting or to the reflective sheeting.
   - Has a protective liner that can be peeled off without being soaked in water or other solvents.
   - Ensure that the liner is easily removed after accelerated storage for 4 hours at 150 °F (65 °C) under 2.5 psi (17 kPa) of pressure.
   - Forms a durable, vandal-resistant bond to smooth and weather resistant surfaces.
   - Adheres securely at temperatures ranging from–30 ° to 200 °F (–35 ° to 95 °C), just 48 hours after application.
   - Prevents the sheeting from shocking off the panel when struck at –10 °F (–25 °C).

B. Fabrication

General Provisions 101 through 150.

C. Acceptance

The Department will accept the material based on the manufacturer's certificate.

D. Materials Warranty

General Provisions 101 through 150.

Section 918—Wild Animal Warning Reflector System

918.1 General Description

Specifications for this work will be included elsewhere in the Contract.

Section 919—Raised Pavement Markers

919.1 General Description

This section includes the requirements for raised pavement marker materials for use in reflective, ceramic, and channel markers.

919.1.01 Related References

A. Standard Specifications

General Provisions 101 through 150.

B. Referenced Documents

ASTM C 424

ASTM C 373

ASTM D 2240

ASTM D 4280

Federal Method TT-T-141, Method 4252

919.2 Materials

A. Requirements

Do not use any marker materials until the laboratory approves it.

1. Use raised pavement marker sources as listed in QPL 76.
2. Use raised pavement markers of the type shown in the Plans or specified in the proposal. This Specification references markers as follows:

Type	Description
1	Two-way, one-color, 4 x 2 in (100 mm x 50 mm), reflective
2	One-way, one-color, 4 x 2 in (100 mm x 50 mm), reflective
3	Two-way, two color, 4 x 2 in (100 mm x 50 mm), reflective
4	Round white, yellow or black ceramic, non reflective
5	Oval white, yellow or black ceramic, non-reflective
6	Oval white or yellow ceramic, reflective
7	White or yellow ceramic jiggle bar, non-reflective
8	White or yellow ceramic jiggle bar, reflective
9	White or yellow channel, non-reflective

10	White or yellow channel, reflective
11	Two-way, one-color, 4 x 4 in (100 mm x 100 mm), reflective
12	One-way, one color, 4 x 4 in (100 mm x 100 mm), reflective
13	Two-way, two color, 4 x 4 in (100 mm x 100 mm), reflective
14	Two-way, one color, flexible reflective
15	One-way, one color, flexible reflective

3. Certification

   Submit a certification to the Engineer from the manufacturer showing the physical properties of the markers and their conformance to this Specification.

4. Packaging

   Pack shipments in containers that are acceptable to common carriers.

   a. Pack the containers to ensure delivery in perfect condition.

   b. Clearly mark each package of pavement markers with the size, color, type, and lot number.

   c. You are liable to replace any damaged shipments.

919.2.01 Raised Retro-Reflective Pavement Markers (Type 1, 2, 3, 11, 12, and 13)

A. Requirements

1. Use raised retro-reflective pavement makers that meet the requirements of ASTM D 4280, designation H.
2. Use raised retro-reflective pavement makers as listed in QPL 76.
3. Use raised retro reflective pavement makers that have been evaluated by the National Transportation Product Evaluation Panel (NTPEP) test facility or other approved test facility.

B. Fabrication

General Provisions 101 through 150

C. Acceptance

The Department will give conditional and final approval to retro reflective pavement markers evaluated by the National Transportation Product Evaluation Program (NTPEP), the Georgia Department of Transportation, or other Department-approved test facilities and place them on QPL 76.

All white and yellow retro reflective pavement markers must meet the requirements of this Specification and the following NTPEP field performance requirement.

a. Conditional QPL Placement: The Department may add markers on a conditional basis to QPL 76. These markers must maintain an average coefficient of luminous intensity for 12 months during the NTPEP evaluation of not less than 25% of the values shown in Table 1 of ASTM D 4280.

b. Final QPL Approval or Rejection: The Department will approve or reject markers based on the marker maintaining an average coefficient of luminous intensity of 0.2 cd/fc for 24 months during the NTPEP evaluation.

919.2.02 Flexible Reflective Markers (Type 14 and 15)

A. Requirements

Use markers manufactured by extruding plastic into an “L” shape, with nominal dimensions of 4 in (100 mm) long x 2 in (50 mm) high (vertical face) x 1 in (25 mm) wide (base leg). Ensure that the markers have the following:

- A pressure-sensitive adhesive with a paper release liner to the bottom of the base leg.

- Strips of metallized acrylic reflective sheeting on either one or both sides of the vertical face.
- A clear plastic cover to protect the reflective strip. Ensure that the cover withstands a chip-seal operation and is easily removed after the operation.

1. Hardness
   a. Select five random markers
   b. Use ASTM D 2240 to determine the Shore A hardness
   c. The Department will reject markers whose body and clear protective cover hardness is less than 80.

B. Fabrication

General Provisions 101 through 150.

919.2.03 Ceramic Pavement Markers (Type 4, 5, 6, 7, and 8)

A. Requirements

1. Use ceramic pavement markers made from a heat-fired, white, vitreous, ceramic base and a heat fired, opaque, glazed surface to produce the properties required in these Specifications.
   a. Do not place glaze on the marker bottom where it connects to the road surface.
   b. Thoroughly and evenly mature the markers. Ensure that they have no defects that affect appearance and serviceability.
   c. Use reflective ceramic markers that meet the specific intensity of each reflective surface according to Table 1 of ASTM D 4280.
   d. Ensure that the mean thickness of the glazed surface is at least 0.005 in (0.13 mm) when measured at least 0.25 in (6 mm) from the edge of the marker.
   e. Ensure that the water absorption of the ceramic markers does not exceed 2 percent of the original dry weight when tested according to ASTM C 373.
   f. Ensure that the glazed surface does not craze, spoil, or peel when passed through one cycle of the Autoclave test at 250 psi (1724 kPa) (ASTM C 424).
2. Use the designated colors for the white and yellow markers.
   a. Ensure that the colors are uniform.
   b. Ensure that black matches Federal Color No. 595-27038.
   c. Determine the color by visually comparing each marker with calibrated standards having CIE Chromaticity Coordinate limits. Determine the limits with Federal methods of test TT-T-141, Method 4252, using a rectangle with the following corner points:

	1		2		3		4		(90MGO)
White	.290	.316	.310	.296	.330	.320	.310	.344	80 min.
Yellow	.435	.485	.445	.435	.544	.456	.516	.484	50 min.

B. Fabrication

General Provisions 101 through 150.

C. Acceptance

1. Use a random sample of five markers for lens impact strength, temperature cycling and compressive strength tests specified in ASTM D 4280.

2. Use the following table to determine if the markers pass the tests.

Markers that Pass	Department Action
5 of 5	Accept the lot.
3 or less of 5	Reject the lot; no resample allowed.
4 of 5	The Contractor may request a retest. The Department will retest an additional 25 random markers in the test or tests where the original sample failed.
20 of 25 retested	Accept the lot.
19 or less of 25 retested	Reject the lot; no resample allowed.

3. Compressive Strength Test
   a. The markers pass if the average compressive load of all five markers is at least 1,500 psi (6.7 kN). No individual marker shall be less than 1,200 psi (5.3 kN).

D. Materials Warranty

General Provisions 101 through 150.

919.2.04 Channel Pavement Markers (Type 9 and 10)

A. Requirements

1. Use channel pavement markers made of either a heat-fired, white, vitreous, ceramic base with a heat-fired, opaque, glazed surface, or a 9 gauge (3.9 mm) steel body with a heat-fired porcelain finish.
   a. Ensure both ceramic and steel channel markers have no defects that affect appearance and serviceability.
   b. Ensure that the mean thickness of the glazed surface of ceramic channel markers is at least 0.005 in (0.13 mm) when measured at least 0.25 in (6 mm) from the edge of the marker.
   c. Ensure that mean thickness of the porcelain finish on the steel channel markers is at least 0.030 in (0.76 mm).
   d. Ensure that the water absorption of the ceramic markers does not exceed 2.0 percent of the original dry weight when tested according to ASTM C 373.
   e. Ensure that the surface of the markers do not craze, spoil, or peel when passed through one cycle of the Autoclave test at 250 psi (1724 kPa) (ASTM C 424).
2. Use the designated colors for the white and yellow markers.
   a. Ensure that the colors are uniform.
   b. Determine the color by visually comparing them with calibrated standards having CIE Chromaticity Coordinate limits. Determine the limits with Federal methods of test TT-T-141, Method 4252, using a rectangle with the following corner points:

	1		2		3		4		(90MGO)
White	.290	.316	.310	.296	.330	.320	.310	.344	80 min.
Yellow	.435	.485	.445	.435	.544	.456	.516	.484	50 min.

B. Fabrication

General Provisions 101 through 150.

C. Acceptance

1. Ensure that Type 10 markers meet the specific intensity of each reflective surface according to Table 1 in ASTM D 4280.
2. Use a random sample of five markers for lens impact strength, temperature cycling and compressive strength tests specified in ASTM D 4280.
3. Select two of the five markers and subject them to all the required tests.
4. Use the following table to determine if the markers pass the tests.

Markers that Pass	Department Action
2 of 2	Accept the lot.
0 of 2	Reject the lot; no resample allowed.
1 of 2	Retest the three remaining markers.
3 of 3 retested 2 or less of 3 retested	Accept the lot. Reject the lot; no resample allowed

D. Materials Warranty

General Provisions 101 through 150.

Section 920—Lighting Standards and Towers

920.1 General Description

This section includes the requirements for the structural components of poles, towers, bases, anchor bolts, luminaires, and other attachments used for roadway, high mast, or other lighting.

In particular, the section covers the following:

- Steel lighting standards and towers
- Aluminum lighting standards
- Prestressed concrete standards
- Service cars
- Support and lowering assemblies
- Grounding

920.1.01 Related References

A. Standard Specifications

Section 105—Control of Work

Section 501—Steel Structures

Section 645—Repair of Galvanized Coatings

Section 865—Manufacture of Prestressed Concrete Bridge Members

B. Referenced Documents

ASTM			AASHTO
A 27/A 27M	A 153/A 153M	A 709/A 709M	M 222/M 222M
A 53/A 53M	A 193/A 193M	B 108	M 314
A 123/A 123M	A 588/A 588M		

MIL-W-83420

AISI 304

AISI 1020

AASHTO Standard Specifications for Structural Supports for Highway Signs, Luminaires, and Traffic Signals

920.2 Materials

Design lighting assemblies consisting of standard, tower, bracket arms, lowering assembly, and luminaire support and assemblies according to AASHTO Standard Specifications for Structural Supports for Highway Signs, Luminaire and Traffic Signals.

Submit to the Engineer the manufacturer's design calculations and shop drawings for each type of lighting standard or tower to be used.

920.2.01 Steel Lighting Standards and Towers

A. Requirements

1. Include the following in the makeup of lighting standards and towers:
   - A pole and bracket arms as required on the Plans
   - A steel base welded to the other end complete with bolts for use as an anchor base pole, or attached to an approved breakaway device, such as slip base, aluminum transformer base, breakaway couplings, etc., when so specified.
2. Steel Structures

   Use structural carbon or structural low alloy steel that meets the requirements of AASHTO Standard Specifications for Structural Supports for Highway Signs, Luminaires, and Traffic Signals. However, do not use ASTM A 588/A 588M (AASHTO M 222/M 222M) steel.
3. Steel Pipe

   Use steel pipe according to ASTM A 53/A 53M Grade B or approved equal. No hydrostatic test is required.

B. Fabrication

1. Roadway Standards

   Unless otherwise specified, do the following:

   a. Make the shaft or appropriate shape continuously taper with a base welded to the lower end.

   b. Construct the standard of steel at least 11 gauge (3.1 mm) thick to the dimensions required for the specified mounting height. Form the standard from one piece with one electrically welded longitudinal joint and no intermediate horizontal joints.

   c. After forming and welding, cold-roll the shaft longitudinally under sufficient pressure to flatten the weld and increase the physical characteristics of the metal in the shaft.

   d. Ensure that the shaft has a reinforced handhole with a cover, except where a transformer base is specified.

      Provide a 0.5 in (13 mm) approved grounding connector in the shaft or base.

      Equip the top of the shaft with a removable pole cap held securely in place.

Galvanize the shaft with the hot-dipped method in ASTM A 123/A 123M.

2. Lighting Towers
   a. Make the shaft to meet the requirements of the roadway standard (Subsection 920.2.01.B.1).
   b. Construct the standard to continuously taper 0.14 to 0.40 in/ft (12 to 33 mm/m).
   c. Ensure that the standard has the necessary dimensions and metal quality to meet the requirements for the pecified mounting height.
   d. You may form the shaft in sections with each section having no more than two longitudinal welded seams.
   e. Use intermediate horizontal welds only at section joints.
   f. Make telescoped joints overlap at least 1-1/2 pole diameters, measured at the minimum diameter of the inner telescoping section.
   g. Have field welding done only by an approved certified welder who represents the manufacturer. Ensure the welding follows the requirements of Section 501.
   h. Repair any damage to spelter coating according to Section 645.
   i. Match-mark all sections of the shaft so that the tapered sections are assembled properly.
3. Post Top or Other Standards for Special Installation
   a. Make the post top and other standards meet the requirements for roadway standards (Subsection 920.2.01.B.1).
   b. Make the top diameter of the shaft 3 in (75 mm), or include a 3 in (75 mm) tenon, unless otherwise specified, to insert the shaft or tenon into the luminaire.
4. Anchor Base

   Do the following, unless otherwise specified:
   a. Secure a steel base to the lower end of the shaft with two continuous electric welds. Ensure that the base develops the full strength of the adjacent shaft section to resist bending.
   b. Where the Plans specify a frangible or breakaway base, attach the base to an approved breakaway device with an approved number and type of bolts.
   c. Provide removable cast or pressed steel covers with each base. Appropriately attach each cover to the base.
5. Steel Bracket Arms

   Do the following, unless otherwise specified:
   a. Use the design dimensions from the Plans.
   b. Ensure that the installed bracket connects securely with the shaft and has a smooth wiring raceway.
   c. Use stainless steel bolts and nuts that meet the requirements of ASTM A 193/A 193M, Type B8C or AISI 304 to attach the bracket arm assembly.
6. Transformer Bases

   Do the following, unless otherwise specified:
   a. Use the dimensions on the Plans to build the bases.
      1) Make top and bottom plates that meet the requirements of ASTM A 709/A 709M, Grade 36 (250), and are fabricated to receive the shaft, anchor bolts, and the foundation bolts.
      2) Make the side panels meet the requirements of AISI 1020.
      3) Create a base thick enough for the height of the standard.
   b. Fit the base with a door that can be securely fastened.
7. Anchor Bolts
   a. Provide bolts as follows:

Lighting standard	4 anchor bolts
Lighting tower	8 anchor bolts (minimum)

   b. Use the size indicated on the Plans or as required by the manufacturer’s shop drawings.

c. Use anchor bolts, nuts, and washers that meet the requirements of AASHTO M 314, Grade 55(370). Supplementary requirement S 1 of AASHTO M 314 also applies.

NOTE: Do not use Grade 105 (724).

d. Install anchor bolts with a leveling nut and a flat washer between the leveling nut and the base plate.
   1) Use a template to install the bolts.
   2) Place a flat washer on top of the base plate.
   3) Lock a lock washer on top of the flat washer and secure the nut.
   4) Fully grout the space between the shoe base and the top of the footing with non-shrink grout.

e. Galvanize threaded ends of anchor bolts, hexagonal nuts, flat washers, and lock washers according to ASTM A 153/A 153M and Plan details.

8. Finish

   Unless otherwise specified, galvanize all steel lighting standards and towers, including pole, base, transformer base, and bracket arm assembly according to ASTM A 123/A 123M.

C. Acceptance

1. The Engineer reserves the right to make test and inspections as necessary to ensure compliance with these Specifications and to reject items that fail testing.
2. The Engineer will accept the steel lighting standards and towers based on:
   - The results of physical and chemical tests made by the Department.
   - The manufacturer's certification showing physical and chemical properties of the metal prior to forming.

D. Materials Warranty

General Provisions 101 through 150.

920.2.02 Aluminum Lighting Standards

A. Requirements

Include the following in making aluminum lighting standards:

1. A pole and bracket arms as required on the Plans.
2. An aluminum base welded or bonded to the lower end, complete with bolts for use as an anchor base pole or attached to an approved breakaway device such as an aluminum transformer base, breakaway couplings, etc., when so specified.

B. Fabrication

Use aluminum materials that meet the requirements of AASHTO Standard Specifications for Structural Supports for Highway Signs, Luminaires and Traffic Signals.

1. Roadway Standards
   a. Make the shaft with a continuous taper and weld, or bond a base to the lower end.
   b. Give the shaft a reinforced handhole with a cover, except when a transformer base is specified.
   c. Provide a 0.5 in (13 mm) approved grounding connection in the shaft or base.
   d. Equip the top of the shaft with a removable pole cap held securely in place with set screws.
2. Post Top or Other Standards for Special Installation

   Do the following, unless otherwise specified:

   a. Build the standard to meet the requirements for roadway standards (Subsection 920.2.01.B.1).

b. Make the top diameter of the shaft 3 in (75 mm), or include a 3 in (75 mm) tenon to insert the shaft or tenon into the luminaire.

3. Anchor Base

   Do the following, unless otherwise specified:

   a. Secure the one-piece aluminum base to the lower end of the shaft by either:
   - Using two continuous welds.
   - Inserting the base at least 12 in (300 mm) into the shaft and bonding with a weatherproof structural epoxy adhesive that fully develops the required strength as specified by the design criteria.

   b. Ensure that the base develops the full strength of the adjacent shaft section to resist bending.

   c. When the Plans call for a frangible or breakaway base, attach the base to an approved breakaway device with an approved number and type of bolts, or use a base that is an approved breakaway type.

   d. Provide removable cast or pressed aluminum covers with each base. Appropriately attach each cover to the base.

4. Aluminum Bracket Arms

   a. Use the Plan design and dimensions.

   b. Ensure that the installed bracket arm connects securely with the shaft and has a smooth wiring raceway.

   c. Use stainless steel bolts and nuts that meet the requirements of ASTM A 193/A 193M, Type B8C or AISI 304, to attach the bracket arm assembly.

5. Transformer Bases

   a. Form the base of cast aluminum that meets the requirements of ASTM B 108, Alloy A03560, T6 to dimensions on the Plans. Use aluminum as the primary material.

   b. Make the top so it can receive the anchor base bolts and the bottom so it can receive the anchor bolts.

6. Anchor Bolts

   Use bolts as described in Subsection 920.2.01.B.7.

7. Finish all aluminum lighting standards, including pole, base, transformer base, and bracket arm assembly in a natural aluminum color, unless otherwise specified.

C. Acceptance

1. The Engineer reserves the right to make test and inspections as necessary to ensure compliance with these Specifications and to reject items that fail tests.
2. The Engineer will accept the aluminum lighting standards and towers based on:
   - The results of physical and chemical tests made by the Department
   - The manufacturer's certification showing physical and chemical properties of the metal prior to forming the standard

D. Materials Warranty

General Provisions 101 through 150.

920.2.03 Prestressed Concrete Lighting Standard

A. Requirements

1. Make the prestressed concrete lighting standard of the design and dimensions in the Plans. Make the standard with machines in steel forms by the centrifugal spinning process to ensure maximum density.
2. Use a manufacturing method that produces a smooth cable raceway throughout the length of the standard.

   Make the raceway between 1.5 to 2 in (38 to 50 mm) in diameter when measured at the top of the standard.

B. Fabrication

1. Use materials and manufacturing methods according to Section 865 with the following exceptions:

a. Concrete: Use Class AAA concrete with a maximum aggregate size of 3/8 in (10 mm) and a maximum slump of 0.5 in (15 mm) after the spinning process.

b. Detension: You may detension the standards after 24 hours under a low-temperature steam process.

However, if the standard does not reach a compression strength of 3,500 psi (25 MPa) in this 24-hour period, the Inspector will reject the standard.

c. Finish: Ensure that the standard has a smooth, uniform finish from a water carborundum mechanical process that removes the laitance and surface content revealing the aggregate.

2. Bases

a. Furnish the standards with an anchor base or a precast butt base.

NOTE: If using the precast butt base, cast it as an integral part of the standard during the spinning process. Make a conduit entrance as shown on the Plans.

b. Make the bolt-down anchor base have a cast steel anchor base that meets the requirements of ASTM A 27/A 27M, Grade 70-36 (485-250).

c. Secure the base to the primary pole reinforcement so it is strong enough to transmit the required loads to the anchor bolts.

3. Bracket Arms

a. You may make the bracket arm assembly of aluminum or steel that meets the requirements shown herein.

b. Galvanize the steel bracket arm assembly according to ASTM A 123/A 123M.

C. Acceptance

1. The Engineer reserves the right to make test and inspections as necessary to ensure compliance with these Specifications and to reject those items failing such tests.
2. The Engineer will accept these standards based on tests made by representatives of the Department during the manufacturing process.
3. Give sufficient notice to the Engineer prior to manufacture to arrange for the required inspection.

D. Materials Warranty

General Provisions 101 through 150.

920.2.04 Service Car

A. Requirements

1. Use a power-driven hoisting device suitable for safely servicing any level of the lighting tower.
2. Furnish shop and working drawings or illustration sheets as needed according to Section 105.
3. Transfer to the Engineer all guarantees on materials and equipment that the manufacturer normally furnishes, together with all operating instructions and service manuals.

   Include in the guarantees the provision that they are subject to such transfer.

B. Fabrication

General Provisions 101 through 150.

C. Acceptance

General Provisions 101 through 150.

D. Materials Warranty

Submit guarantees on materials and equipment.

920.2.05 High Mast Luminaire Support and Lowering Assembly

A. Requirements

1. This assembly shall be a mechanical device capable of supporting the luminaire assembly at the required operating position and raising and lowering the assembly to ground level for servicing.
2. Furnish shop and working drawings or illustration sheets according to Section 105.
3. Transfer to the Engineer all guarantees on materials and equipment that the manufacturer normally furnishes, together with all operating instructions and service manuals.

   Include in the guarantees the provision that they are subject to such transfer.

B. Fabrication

1. Use AASHTO Standard Specifications for Structural Supports for Highway Signs, Luminaires and Traffic Signals to build the assembly.
2. Support Head Frame

   Use a head frame with three supports for the suspension cables and a pulley for the power cable.

   a. Place the suspension supports 120 degrees apart. Place the power cable pulley midway between two suspension supports.

   b. Attach two pulleys to the inside of each support, one at each end. Construct the pulleys so that the suspension cables ride freely in the groove of the pulleys.

      Provide cable guides and retainers to keep the suspension cables and power cable inside the pulleys.

   c. Supply a hood for the support head frame to protect against weather for all working components at the pole top. Ensure that the hood adequately ventilates the pole.
3. Luminaire Mounting Ring

   a. Equip the inner portion of the ring with approved roller-contact, spring-loaded centering arms. The arms center the luminaire ring while ascending or descending the pole, protect the pole and luminaires, and prevent jamming during the raising and lowering operations.

      Make the rollers for the centering arms of a water-resistant, non-marking composition material.

   b. Design the mounting ring to symmetrically mount the number of luminaires indicated on the Plans.

      1) Provide a weatherproof junction box and terminal board terminating the power cable and connecting the luminaire wiring.

      2) Provide a weatherproof power receptacle to test the luminaires when the ring is in the lowered position.
4. Non-Latching Device Design

   a. If the design does not have a latching device at the top of the pole, position the luminaire mounting ring tightly against the support head frame.

NOTE: Use a positive, visible indication that the required force has been applied.

   b. Make sure the luminaire mounting ring and support head frame can hold the luminaire mounting ring in place and prevent rotation while in the raised position.
5. Latching Device Design

   a. Use a latching device at the top of the pole to latch all three suspension points and support the total weight of the ring including luminaires.

   b. Place all moving parts of the latching device in the luminaire mounting ring.

NOTE: Use a positive, visible indication of the latching position.

6. Miscellaneous Hardware

Use non-corrosive miscellaneous fittings, fasteners, and hardware for the support head frame and luminaire mounting ring. Use an approved means for locking nuts.

7. Hoisting Systems
   a. Ensure that each pole has three suspension cables and one hoisting cable.
   b. Use cables that have 7 strands of 19 wires each, made of stainless steel aircraft cable according to MIL-W-83420, Type 1, Composition B.
   c. Use at least 0.2 in (5 mm) diameter suspension cables and at least a 0.25 in (6 mm) diameter hoisting cable.
   d. Anchor the ends of the pole's suspension cables to the top of the suspension cable bracket assembly. Pass the other ends through the pulleys on the support head frame and attach to the luminaire mounting ring.
   e. Secure the hoisting cable at the bottom center of the suspension cable bracket assembly. Attach the other end to the drum of the motor-driven winch.

      Prevent future twisting and eliminate any tension developed during initial installation of the hoisting cable system.
   f. Use a worm-gear reducing winch with a reduction ratio that is self-locking in both raising and lowering operations.

      Completely enclose the worm-gear in a lubricating reservoir.
   g. Make the winch operable with either an electric drill motor or a NEMA frame motor as described in Lowering Device Power Supply Unit.
   h. Provide a hand crank for raising and lowering.
   i. Include a cable guard/retainer for the winch drum. This will force the cable away from the ends of the drum for spooling and prevent the cable from coming off the drum.
   j. Design the entire hoisting system so that power cable, suspension cables, and hoisting cable may be replaced from the ground.
8. Lowering Device Power Supply Unit
   a. Use a lowering device power supply unit that is either an electric drill motor or a NEMA frame motor.
      1) Equip both motors with a factory-set torque limiter. Power each from a weatherproof outlet or receptacle located in the service area of the pole.
      2) You may use a stepdown transformer to supply the required motor voltage.
   b. Make the transformer an integral part of the power supply unit, when required.
   c. Attach and lock in place the drill or motor at the pole handhole. Provide a remote control system that works from at least 20 ft (6 m) away.
9. High Mast Power Cable
   a. Use extra-heavy duty power cable in a jacket that resists oil and sunlight. Include in the cable the number and size of copper insulated conductors required on the Plans.
   b. Securely connect the power cable to the luminaire mounting ring and the suspension cable bracket assembly so it will not damage the cable and supports only its own weight.
10. Pole Disconnect
   a. Furnish each pole with a molded case circuit breaker in a NEMA enclosure of the size and type specified on the Plans.
   b. Make the breaker accessible through the pole handhole. Get the breaker from the manufacturer of the raising and lowering device.

C. Acceptance

General Provisions 101 through 150.

D. Materials Warranty

Submit guarantees on materials and equipment.

920.2.06 Grounding

A. Requirements

General Provisions 101 through 150.

B. Fabrication

1. Connect the power system ground to the pole.
2. Include a grounding conductor with the high mast power cable and connect it to the luminaire mounting ring.
3. Ground the pole disconnect to the pole.

C. Acceptance

General Provisions 101 through 150.

D. Materials Warranty

General Provisions 101 through 150.

Section 921—Luminaires

921.1 General Description

This section includes the requirements for the following types of luminaires:

- Roadway
- Rest area
- High mounting height
- Offset
- Underpass
- Navigation lighting

921.1.01 Related References

A. Standard Specifications

General Provisions 101 through 150.

B. Referenced Documents

ANSI/IES Types (specified on Plans)

921.2 Materials

Use luminaires that are complete, including ballast, lamps, fuses, and associated hardware and wiring.

921.2.01 Luminaires

A. Requirements

1. Standard Equipment for Roadway, Rest Area, High Mounting Height, and Offset Luminaires
   Use luminaires for these locations that have the following equipment:
   a. Lamps: Check the Plans for the lamp wattage, type, and size.
   b. Ballasts: Use ballasts that meet these requirements, unless otherwise specified:

- Are part of the luminaire housing or in a separate weatherproof housing attached to the luminaire housing.
- Are used for multiple circuits, unless otherwise specified.
- Operate at voltages shown on the Plans.
- Provide rated lamp watts to the lamp through a range in primary voltage of +10 percent.
- Have a power factor of at least 0.90.
- Provide enough open circuit voltage to start lamps at a temperature as low as–20 °F (-29 °C).
- Are enclosed in an epoxy encapsulated covering (mounted on the external pole base or cabinet).

c. Controls: The local power company will provide and install control equipment, including photoelectric control, receptacle, contactor, and other equipment, unless otherwise indicated on the Plans.

d. Level Indicator: When shown on the Plans as a required item, ensure that each luminaire has a built-in device indicating the direction and amount of tilt over a range of 0 to 5 degrees in any direction. Ensure that the indicator has the following characteristics:

- Has three calibrations, accurate to within 1/2 degree:

A	Level
B	3 degree tilt
C	5 degree tilt

- Is clearly visible without aid in daylight to a distance of 50 ft (15 m).
- Does not alter or reduce the amount of light from the luminaire.
- Has a transparent container made of clear, ultraviolet-inhibited acrylic. The lower surface is curvilinear in any vertical cross-section to support a spherical indicator and dampening fluid.
- Uses a clear dampening fluid made of 70 percent glycerol and 30 percent iron-free water.
- Uses a highly visible orange or red color ball in the spherical indicator that is chemically inert to the dampening fluid.

2. Roadway Luminaires

Ensure that roadway luminaires have or meet the following requirements:

a. Are placed horizontal or vertical as indicated on the Plans.

b. Have an aluminum housing with the following:

- A 2 in (50 mm) slipfitter
- A removable aluminum reflector
- A detachable prismatic glass refractor and aluminum refractor holder
- A prewired terminal board and integral ballast
- An adjustable, porcelain enclosed mogul socket with spring loaded center contact and lamp grips
- An approved type gasket with a positive latch at the street side of the luminaire

c. Distribute light according to ANSI/IES type as specified on the Plans.

3. Rest Area Luminaires

Ensure that rest area luminaires have or meet the following requirements:

- Are placed vertically
- Have a hinged aluminum canopy
- Have a pressed glass prismatic refractor, unless otherwise specified
- Have a die cast aluminum base/housing with access door and slipfitter for a 3 in (75 mm) OD pile top or tenon
- Have a prewired terminal board and integral ballast
- Have a porcelain enclosed mogul socket with spring loaded center contact and lamp grips
- Distribute light according to ANSI/IES type as specified on the Plans

4. High Mounting Height Luminaires

   Ensure that high mounting height luminaires have or meet the following requirements:

   a. Have a rain-tight, precision-cast, aluminum housing that includes an adjustable slipfitter for a 2 in (50 mm) mast arm that allows adjustments of at least 3 degrees above and below the mast arm axis.
   b. Contain a prewired terminal board.
   c. Have an integral ballast with quick disconnect plug.
   d. Have an adjustable porcelain-enclosed mogul socket with spring-loaded center contact and lamp grips.

      Ensure that the lamp socket adjusts to obtain maximum intensity at vertical angles from 55 to 65 degrees.

      Provide a separate lamp support to prevent vibration damage.
   e. Be able to accept No. 6 to No. 14 AWG wire with clamp-type terminals.
   f. Have ballast enclosed in a rain-tight cast aluminum housing, fully serviceable without removing the luminaire from its bracket.
   g. Have refractors and/or lens that are heat- and shock-resistant tempered glass.
   h. Distribute light according to ANSI/IES type as specified on the Plans.

5. Offset Luminaires

   Ensure that offset luminaires have or meet the following requirements:

   a. Have rain-tight, precision-cast aluminum housing with a baked-on enamel finish and the following:
      - Twin trigger latches
      - A hinged door for easy access to internal components
      - Non-corrosive hardware
   b. Include a porcelain-enclosed mogul socket with spring-loaded center contact and lamp grips.
      1) Ensure that the grips are permanently attached to the reflector to properly position the lamp.
      2) Equip the socket wiring with a quick-disconnect to easily remove the reflector/socket assembly.
   c. Include a highly polished, anodic-surfaced, aluminum reflector and a prismatic borosilicate glass refractor.
   d. Have seals or gaskets at all critical points to form a weather-tight breathing seal.
   e. Include a prewired terminal board.
   f. Have integral wired ballast (that meets the ballast requirements of this Specification and the Plans).
   g. Have a slipfitter for a 2-3/8 to 3 in (60 to 75 mm) OD pole tenon and external means to level and aim, both horizontally and vertically, for rapid and versatile field installation.
   h. Be adjusted and sized, after the pole is erected and plumbed, to provide the lighting pattern according to the Plans and the manufacturer's recommendations and instructions.
   i. Efficiently distribute light uniformly along the roadway when offset as shown on the Plans and with spacings up to 7 mounting heights.

6. Underpass Luminaires (Type A)

   a. Housing: Ensure that the Type A housing meets these requirements, unless otherwise indicated on the Plans:
      - Be surface-mounted at about 15 ft (4.5 m) above the edge of the finished pavement on an outside bridge pier, as shown on the Plans
      - Be die-cast aluminum with an integral ballast
      - Have a specular aluminum reflector
      - Have a detachable thermal shock-resistant glass refractor
      - Have an adjustable porcelain-enclosed mogul socket with spring-loaded center contact and lamp grips to properly position the lamp
      - Have a hinged door assembly protected by safety chains and an approved gasket to keep out moisture and dirt

- Be able to attach directly to the bridge pier or underpass wall

b. Light Distribution: For Type A, use an enclosed High Intensity Discharge (H.I.D.) luminaire, unless otherwise indicated on the Plans.

Ensure that the luminaire distributes light in a wide-beam, diffused pattern.

c. Lamp: Use a lamp of the wattage, type, and size shown on the Plans.

d. Ballast: Use ballast that meets the provisions of Subsection 921.2.01.A.1.b.

e. Controls: Use controls that meet the provisions of Subsection 921.2.01.A.1.c.

f. Include all thimbles, fittings, elbows, etc., in the price bid for conduit. The Department will include a pay item for necessary conduit in the contract.

7. Underpass Luminaires (Type B)

a. Housing: Ensure that Type B housing meets the following requirements:

- Be made from aluminum with a specular-finish, one-piece aluminum reflector and a clear, ribbed, one-piece detachable, side-hinged cover of acrylic plastic. Ensure that the cover is completely gasketed to keep out contamination.
- Have a heavy-duty, galvanized mounting support that allows the unit to rotate 180 degrees around its lateral axis when mounted.
- Include spring-loaded, heavy-duty, recessed, double-contact lamp holders to accept a single F-72/PG 17 fluorescent lamp.
- Be able to attach to the bridge pier or underpass wall.

b. Light Distribution: For Type B, use an enclosed fluorescent luminaire with a wide-beam, diffused light distribution pattern.

c. Lamp: Use a 165 watt F-72 PG 17/CW fluorescent lamp with a recessed double contact base and a rated life of at least 12,000 hours, unless otherwise indicated on the Plans.

d. Ballasts for Multiple Circuits: Use ballasts that meet the following requirements:

- Have a power factor of at least 0.90 to operate at voltages shown in the Plans
- Provide enough open-circuit voltage to start lamps at temperatures as low as –20 °F (-29 °C)
- Are inside the luminaire housing
- Can service one or two luminaires as indicated on the Plans

e. Controls: Use controls that meet the provisions of Subsection 921.2.01.A.1.c.

f. Circuit Breakers: Install galvanized, weatherproof circuit breakers and cabinets as indicated on the Plans. Use cabinets 12 x 10 in (300 x 250 mm) deep.

g. Install cabinets, conduit, and complete wiring as shown on Plans and as directed by the Engineer.

8. Navigation Lighting Luminaires

a. Housing: Use cast aluminum housing of the type specified on the Plans. Use housing that has a gasketed service door for relamping.

b. Lamps: Use clear, 100-watt, rough service lamps with 125-130 volt rating.

c. Receptacles: Use receptacles rated at least 660 watts, 250 volts for medium screw base lamps.

Use a design that will not freeze the lamps with aluminum screw base shells.

d. Lens: Use 8 in (200 mm) marine type, fresnel lens(es).

1) Use a lens color with horizontal arcs of visibility as shown on the Plans.

2) For fixed span installations, you may use a combination of the following luminaires and colors:

Location	Color	Degrees of Horizontal Arcs of Visibility
Channel center	Green	360
Channel margin	Red	180
Main channel	White	180
Pier, bent	Red	180
Abutment	Red	180
Fender system	Red	180
Axis line or center line	Red	180

3) Mount channel marker luminaires with a swivel so that you can move the arm and luminaire in a 180-degree arc to replace the lamp and maintain the unit.
4) Unless otherwise noted, use pivot or swivel-type channel marker luminaires with either bronze or galvanized steel retriever chain and swivel.

B. Fabrication

General Provisions 101 through 150.

C. Acceptance

General Provisions 101 through 150.

D. Materials Warranty

General Provisions 101 through 150.

Section 922—Electrical Wire and Cable

922.1 General Description

This section includes the requirements for electrical conductors, wire, and cable.

922.1.01 Related References

A. Standard Specifications

General Provisions 101 through 150.

B. Referenced Documents

National Electrical Code

922.2 Materials

922.2.01 Electrical Wire and Cable

A. Requirements

1. Conductors
   - Unless otherwise specified, use conductors that meet the following requirements:
   - Are made of copper

- Are the size and type shown on the Plans
- Meet the requirements of the National Electrical Code

NOTE: Do not use conductors not meeting this requirement or with illegible identification.

2. Wire and Cable

   Use wire and cables that have the following requirements:

   a. Are new without kinks or other defects when installed

   b. Are single conductor or multi-conductor with one of the following types:

      - RHH/RHW/USE 90/75 °C
      - RHW, USE, THW, XHHW, or THWN 75 °C
      - RHH, XHHW, or THHN 90 °C

   c. Use insulation for 600 volts as indicated on the Plans.

3. Underground Cable

   Use underground wire that meets the following requirements:

   - Be rot and vermin proof
   - Be the proper size
   - Be a type recommended by the cable manufacturer for direct burial in earth

B. Fabrication

General Provisions 101 through 150.

C. Acceptance

General Provisions 101 through 150.

D. Materials Warranty

General Provisions 101 through 150.

Section 923—Electrical Conduit

923.1 General Description

This section includes the requirements for metallic, nonmetallic, and flexible electrical conduit.

923.1.01 Related References

A. Standard Specifications

General Provisions 101 through 150.

B. Referenced Documents

National Electrical Code

ANSI C-80.1

ASTM A 90

Federal Specification WW-C-540a

Federal Specification W-C-1094

American National Standards Institute (ANSI) Specification C-80.1

Underwriter's Laboratories (UL) 651

National Electrical Manufacturers Association (NEMA) Standard TC 14, Type HW

923.2 Materials

923.2.01 Metallic Conduit

A. Requirements

1. Use metallic conduit that meets the requirements of and is used according to the latest edition of the National Electrical Code.
   a. Check the Plans or Project Proposal for the type of conduit allowed.
   b. Ensure each section of conduit shows approval by the Underwriter's Laboratories, Inc. (UL).
2. Rigid Steel Conduit

   Ensure that rigid steel conduit, elbows, and couplings meet ANSI C-80.1.

   Use conduit protected by a uniform metallic zinc coating on both the exterior and interior surfaces.
   a. Coat the conduit and coupling with a minimum coating of 1.24 oz./ft² (378 g/m²), total of both surfaces.
   b. Determine the weight of the zinc coating using either ASTM A 90, or, if the Engineer elects, a magnetic or electromagnetic thickness gage to measure the coating thickness.
3. Rigid Aluminum Conduit

   Ensure that rigid aluminum conduit, elbows, and couplings meet Federal Specification WW-C-540a.

B. Fabrication

General Provisions 101 through 150.

C. Acceptance

General Provisions 101 through 150.

D. Materials Warranty

General Provisions 101 through 150.

923.2.02 Nonmetallic Conduit

A. Requirements

1. Polyvinyl Chloride (PVC) Conduit

   Use unplasticized PVC conduit that meets the requirements of UL 651.
   a. Use Type I conduit only when encased in concrete. UL 651 refers to Type I as Type EB.
   b. Use Type II conduit for direct burial. Use Schedule 40 (heavy wall), unplasticized PVC conduit that meets the requirements of Federal Specification W-C-1094, unless otherwise specified.
2. Fiberglass Reinforced Epoxy (FRE) Conduit

   Use FRE conduit and fittings that meet the requirements of NEMA Standard TC 14, Type HW.

B. Fabrication

General Provisions 101 through 150.

C. Acceptance

General Provisions 101 through 150.

D. Materials Warranty

General Provisions 101 through 150.

923.2.03 Flexible Conduit

A. Requirements

1. Use flexible conduit with a galvanized steel core and a UV-resistant PVC cover.
2. Use liquid-tight conduit with a continuous copper ground.
3. Use conduit that meets the requirements of Article 351 of the National Electrical Code.

B. Fabrication

General Provisions 101 through 150.

C. Acceptance

General Provisions 101 through 150.

D. Materials Warranty

General Provisions 101 through 150.

Section 924— Miscellaneous Electrical Materials

924.1 General Description

This section includes the requirements for the following miscellaneous electrical materials:

- Ground rods
- Fuses and fuse holders
- Lightning arresters
- Circuit breakers
- Disconnect switches
- Photoelectric controls
- Magnetic contactors

924.1.01 Related References

A. Standard Specifications

General Provisions 101 through 150.

B. Referenced Documents

ASTM A 153/A 153M

EEI/NEMA publications

924.2 Materials

Ensure that all electrical materials are approved by the Underwriter’s Laboratory or other acceptable testing agency.

924.2.01 Ground Rods

A. Requirements

1. Use ground rods that are 5/8 in, ± 1/16 in (16 mm, ± 2 mm) diameter and 8 ft (2.4 m) long, unless otherwise shown on the Plans.
2. Ensure that the rods are galvanized steel with a minimum coating of 2 oz/ft² (610 g/m²) according to ASTM A 153/A 153M.

B. Fabrication

General Provisions 101 through 150.

C. Acceptance

General Provisions 101 through 150.

D. Materials Warranty

General Provisions 101 through 150.

924.2.02 Fuses and Fuse Holders

A. Requirements

Use fuses of the amperage indicated on the Plans and with an appropriate voltage rating to operate at the voltage specified on the Plans.

B. Fabrication

1. Use in-the-line, waterproof fuse holders.
   a. Construct and install the fuse holder so it will retain the fuse on the load side if disconnected or broken apart.
   b. Install the fuse holder with a breakaway feature, when specified on the Plans.
2. Install a weatherproof boot, furnished by the fuse holder manufacturer, over each end of the fuse holder.

C. Acceptance

General Provisions 101 through 150.

D. Materials Warranty

General Provisions 101 through 150.

924.2.03 Lightning Arresters

A. Requirements

Use lightning arresters of the metal oxide varistor type, rated at 650 volts, and have the number of poles required, unless otherwise specified.

Provide a pole for each ungrounded leg of the service voltage.

B. Fabrication

1. For units not sealed at the factory:
   a. Apply silicone caulk to the lead entrance.
   b. Install heat shrinkable tubing, with precoated sealant on the interior surface, over the lead entrance.
2. Place the arrester in a watertight housing. Ensure that the lead entrance to the housing is encapsulated or sealed.

C. Acceptance

General Provisions 101 through 150.

D. Materials Warranty

General Provisions 101 through 150.

924.2.04 Circuit Breakers

A. Requirements

1. Use circuit breakers that have the following characteristics:
   - Are thermal magnetic, molded case, quick-make and quick-break
   - Operate with over-the-center toggles with the handle going to a position between “ON” and “OFF” to indicate automatic tripping
   - Can bolt on with an industrial rating and a minimum interrupting capacity of 10,000 RMS symmetrical amperes
   - Be enclosed in a lockable, weatherproof enclosure
   - Have proper lugs that are sized for the cable used. Do not cut cable strands to attach to circuit breakers.
2. Use multi-pole breakers that are of the single handle and common trip type with a voltage rating of at least 240 volts from line to ground.

B. Fabrication

General Provisions 101 through 150.

C. Acceptance

General Provisions 101 through 150.

D. Materials Warranty

General Provisions 101 through 150.

924.2.05 Disconnect Switches

A. Requirements

1. Use disconnect switches with the voltage and ampere rating specified on the Plans.
2. Fuse the switches as designated on the Plans.
3. Use switches that are 2-pole, 3-wire, solid neutral with heavy duty rating, unless otherwise specified.
   You may install the switch separately or with a magnetic contactor.
4. Enclose the switch in a lockable, stainless steel, weatherproof enclosure.
5. Use the proper lug sized for the cable used. Do not cut cable strands to attach to disconnect switches.

B. Fabrication

General Provisions 101 through 150.

C. Acceptance

General Provisions 101 through 150.

D. Materials Warranty

General Provisions 101 through 150.

924.2.06 Photoelectric Controls

A. Requirements

1. Use photoelectric controls that have the following characteristics:
   - Have a factory setting for turn-on at 1.5 footcandles (16 lux) ambient light level
   - Have a suitable differential between turn-on and turn-off levels to prevent cycling at critical levels
   - Operate on a supply voltage of 105-130 volts, 50/60 Hz AC, with an inrush rating of 120 amperes at 120 volts
   - Operate with a lamp load rating of 1,000 watts for incandescent and 1,800 volt-amperes for mercury vapor and fluorescent lamps
   - Contain built-in surge and lightning protection
   - Have a rated life at full load of at least 5,000 on-off operations
   - Have relay contacts that are single-pole, single-throw (SPST), normally closed (NC)
   - Have dielectric strength of at least 5,000 volts between any current carrying part and metal mounting surface
   - Withstand an ambient temperature range of–65° to 158° F (–54° to 70° C)
   - Have a moistureproof housing about 2-1/4 in (60 mm) high with a base diameter of less than 3-1/4 in (85 mm)
   - Have a chassis of molded phenolic with three locking-type blades and a neoprene gasket that meet EEI/NEMA publications
2. Provide an approved receptacle for mounting the photoelectric control.

B. Fabrication

General Provisions 101 through 150.

C. Acceptance

General Provisions 101 through 150.

D. Materials Warranty

General Provisions 101 through 150.

924.2.07 Magnetic Contactors

A. Requirements

1. Use magnetic contactors that have the following characteristics:
   - Have the voltage and ampere rating as specified on the Plans
   - Have the number of poles required to open each ungrounded conductor
   - Have a coil voltage of 120 volts, 60 Hz AC, unless otherwise specified
   - Are in lockable, stainless steel, weatherproof enclosures, unless otherwise specified
   - Have proper lugs sized for the cable used
2. Do not cut cable strands to attach to contactors.

B. Fabrication

General Provisions 101 through 150.

C. Acceptance

General Provisions 101 through 150.

D. Materials Warranty

General Provisions 101 through 150.

Section 925—Traffic Signal Equipment

925.1 General Description

This section provides Specifications for a variety of traffic signal equipment. Ramp Meters are defined as a form of traffic signalization and all general provisions for traffic signalization are applicable unless otherwise noted in the Plans and Specifications.

925.1.01 Related References

A. Standard Specifications

Section 500—Concrete Structures

Section 639—Strain Poles for Overhead Sign and Signal Assemblies

Section 647—Traffic Signal Installation

Section 682—Electrical Wire, Cable and Conduit

Section 833—Joint Fillers and Sealers

Section 861—Piling and Round Timber

Section 870—Paints (Field Painting)

Section 915—Mast Arm Assemblies

Section 922—Electrical Wire and Cable

Section 923—Electrical Conduit

Section 926—Wireless Communication Equipment

Section 935—Fiber Optic System

Section 937 – Video Detection System

Section 939—Communications and Electronic Equipment

B. Referenced Documents

- National Electrical Manufacturers Association (NEMA) Standards Publication TS 1 Section 15
- NEMA Standard Publication TS 2- 1998
- Institute of Transportation Engineers (ITE)Vehicle Traffic Control Signal Heads Specification
- ITE Vehicle Traffic Control Signal Heads: Light Emitting Diode (LED)Circular Signal Supplement June 27, 2005 Specification
- ITE Vehicle Traffic Control Signal Heads – Part 3: Light Emitting Diode (LED) Vehicle Arrow Traffic Signal Modules Specification
- ITE Pedestrian Traffic Control Signal indications – Part 2: Light Emitting Diode (LED) Pedestrian Traffic Signal Modules Specification
- International Municipal Signal Association (IMSA) #20-1 Specification
- IMSA #20-4Specification
- IMSA #20-6Specification

- IMSA #50-2Specification
- IMSA #51-1Specification
- Underwriters Laboratory Inc. (UL) 94 Tests for Flammability of Plastic Materials for Parts in Devices and Appliances
- UL 493 Standard for Safety for Thermoplastic-Insulated Underground Feeder and Branch-Circuit Cables
- Traffic Signal Control Equipment Specifications, January 1989 edition and applicable addenda, State of California Business, Transportation & Housing Agency
- State of California Department of Transportation (CALTRANS) Qualified Products List (QPL) Controller Assemblies for the Model 170/2070 Traffic Controller,
- CALTRANS Transportation Electrical Equipment Specifications (TEES) August 16, 2002 and applicable addenda
- Georgia Department of Transportation Qualified Products List 75"Polyurethane Sealant for Inductive Loops"(American Society of Testing and Materials(ASTM) A36 Standard Specification for Carbon Structural Steel
- ASTM A53 Standard Specification for Pipe, Steel, Black and Hot Dipped, Zinc-Coated, Welded and Seamless
- ASTM A123 Standard Specification for Zinc (Hot-Dip Galvanized) Coating on Iron and Steel Products
- ASTM A153 Standard Specification for Zinc Coating (Hot Dip) on Iron and Steel Hardware
- ASTM A325 Standard Specification for Structural Bolts, Steel, Heat Treated, 120/105 ksi Minimum Tensile Strength
- ASTM A475 Standard Specification for Zinc-Coated Steel Wire Strand
- ASTM A572 Standard Specification for High- Strength Low-Alloy Columbium-Vanadium Structural Steel
- ASTM C1028 Standard Test Method for Determining the Static Coefficient of Friction of Ceramic Tile and Other Like Surfaces by the Horizontal Dynamometer Pull-Meter Method
- ASTM D256 Standard Test Methods for Determining the Izod Pendulum Impact Resistance of Plastics
- ASTM D638 Standard Test Methods for Tensile Properties of Plastics
- ASTM D785 Standard Test Method for Rockwell Hardness of Plastics: Electrical Insulating Materials
- ASTM D790 Standard Test Methods for Flexural Properties of Unreinforced and Reinforced Plastics and Electrical Insulating Materials
- ASTM D2444 Standard Test Methods for Determination of the Impact Resistance of Thermoplastic Pipe and Fittings by Means of a Tup
- ASTM D543 Standard Practices for Evaluating the Resistance of Plastics to Chemical Reagants
- Electronic Industries Standards (EIA)

925.2 Materials

925.2.01 General

A. Requirements

Ensure that the traffic signal equipment and materials meet the Plans and Specifications.

All equipment furnished shall be new and meet the requirements of the following:

- Underwriter's Laboratory Incorporated (UL)
- Electronic Industries Association (EIA)
- National Electric Code (NEC)
- American Society of Testing and Materials (ASTM)
- American National Standards Institute (ANSI)

- International Municipal Signal Association (IMSA)
- National Electrical Manufacturers Association (NEMA)
- Applicable Standards, Specifications, and Regulations of the:

  Georgia Department of Transportation
  Traffic Signal Electrical Facility & NaviGAtor Support (TSEF)
  935 E. Confederate Avenue, Building 5
  Atlanta, GA 30316

B. Fabrication

General Provisions 101 through 150.

C. Acceptance

General Provisions 101 through 150.

D. Materials Warranty

- Provide to the District Signal Engineer or maintaining agency all manufacturers' warranties and guarantees for all signal equipment items listed in this document as well as any signal equipment listed in the Plans, except for state supplied equipment.
- Ensure that warranties and guarantees are consistent with those provided as customary trade practices; or as otherwise specified in the Plans, Standard Specifications, Supplemental Specifications or Special Provisions.
- Ensure, and state, that manufacturer's and supplier's warranties and guarantees are transferable to the agency or user that is responsible for traffic signal maintenance. And said warranties and guarantees are continuous throughout their duration.
- Ensure equipment provided under this specification shall be warranted by the manufacturer to be free from defects in materials and workmanship for a minimum period of two years from date of receipt or one year from date of acceptance of installation. The exception is the other materials stated in this specification which have longer warranty durations.
- Ensure the manufacturer will repair any faulty equipment during this period at no charge to the Department for parts, labor or shipping to and from the factory.

925.2.02 Type 2070 Controller Assemblies

A. Requirements

For 2070 controller cabinet assemblies, use 2070 controller units that meet the requirements of the following or are previously approved by TSEF:

- *Traffic Electrical Equipment Specifications (TEES)* published by the State of California Business, Transportation, and Housing Agency; Department of Transportation, current edition and current addenda
- *CALTRANS* Qualified Products List (QPL)
- Ensure the unit supplied is compatible with current GDOT licensed firmware.

The following Specifications augment the CALTRANS Specifications and take precedence over conflicting CALTRANS Specifications.

1. Input/output (I/O) and Configuration:

   The 2070 Controller shall be supplied in one of the following configurations, as specified in the Plans (all modules are specified in TEES, but these configurations supersede the defined configurations in TEES):

   - 2070L: Provide Chassis, 2070-1B Single-Board CPU, 2070-2A Field I/O Module, 2070-3B Front Panel (8x40 display), 2070-4B 3.5-amp Power Supply, and a 2070-7A Module. This unit is intended for interfacing in Type 170E or ITS cabinets and shall provide the default input and output configuration as shown in Tables 925-13, 925-15 and 925-16 for ITS cabinets using a traffic signal application.

- 2070E: Provide Chassis, 2070-1E Single-Board CPU, 2070-2A Field I/O Module, 2070-3B Front Panel (8x40 display), 2070-4B 3.5-amp Power Supply, and a 2070-7A Module. This unit is intended for interfacing in Type 170E or ITS cabinets and shall provide the default input and output configuration as shown in Tables 925-13, 925-15 and 925-16 for ITS cabinets using a traffic signal application.
- 2070LC: Provide Chassis, 2070-1B Single-Board CPU, 2070-2B Field I/O Module, 2070-3B Front Panel (8x40 display), 2070-4B 3.5-amp Power Supply, and a 2070-7A Module. This unit is intended for interfacing in ITS cabinets only and shall provide the default input and output configuration as shown in Tables 925 -13, 925-15 and 925-16 for ITS cabinets using a traffic signal application.
- 2070 LB: Provide Chassis, 2070-1B Single –Board CPU, 2070-2A Field I/O Module, 2070-3C Front Panel, 2070-4B 3.5-amp Power Supply, This unit is intended for interfacing in Type 170E or ITS cabinets where a user interface is not required and shall provide the default input and output configuration as shown in Tables 925 -13, 925-15 and 925-16 for ITS cabinets using a traffic signal application.
- 2070 LN1: Provide Chassis, 2070-1B Single-Board CPU, 2070-2B Field I/O Module, 2070-3B Front Panel (8x40 display), 2070-4NB 3.5-amp Power Supply, 2070-8 NEMA Interface Module, and a 2070-7A Module. This unit is intended for interfacing in NEMA TS 1 or NEMA TS 2 Type 2 cabinets.
- 2070 LN2: Provide Chassis, 2070-1B Single-Board CPU, 2070-2N Field I/O Module, 2070-3B Front Panel (8x40 display), 2070-4NB 3.5-amp Power Supply, and a 2070-7A Module. This unit is intended for interfacing in a NEMA TS 2 Type 1 cabinet.

2. Power Supply Modules:

Either the 2070-4A, 2070-4B, 2070-4NA or 2070-4NB module shall be provided as required in the configuration requirements in the preceding Item. In addition to all requirements of the TEES, the power supplies shall be clearly marked as a “2070-4A”, “2070-4B”,”2070-4NA”, or “2070-4NB”. The Vendor may supply a 2070-4A or 4NA power supply module in lieu of a 2070-4B or 4NB, as long as it is so marked and adds no additional cost to GDOT.

3. Documentation:

Include with each controller, manuals that document the programming, operation, and maintenance of the unit. Include schematic drawings and pin assignment charts in the manuals for maintenance. Documentation shall include all components, including communications modules. Specific reference is made to section 1.2.4 Documentation in the CALTRANS TEES concerning required documentation to be provided.

4. Testing:

Provide for complete testing of unit before it is shipped. If unit is shipped with applications firmware installed, it must be tested with the application (e.g. Traffic Signal Control). If a random sample of greater than 10 percent of the units tested is rejected then the total shipment shall be rejected and vendor will be responsible for all costs to test and repair all units provided.

B. Fabrication

General Provisions 101 through 150.

C. Acceptance

See Subsection 925.2.02 for compliance with CALTRANS QPL. Also see item 4 Testing in Section A above.

D. Materials Warranty:

(See Subsection 925.2.01 D for Materials Warranties).

925.2.03 Type 2070 Controller Subassemblies

A. Requirements

For 2070 controller subassemblies, use 2070 controller subassembly units that meet the requirements of the following or are previously approved by TSEF:

- *Traffic Electrical Equipment Specifications (TEES)* published by the State of California Business, Transportation, and Housing Agency; Department of Transportation, current edition and current addenda
- *CALTRANS* Qualified Products List (QPL)

The following Specifications augment the CALTRANS Specifications and take precedence over conflicting CALTRANS Specifications.

1. 2070 1B Module:

   The 2070 1B module may be supplied as a separate item to be used in all versions of the 2070 controller. The 2070 1B module shall be supplied complete with the operating software. Ensure it contains the required files to be compatible with the current GDOT applications software.

2. 2070 1E Module:

   The 27070 1E module may be supplied as a separate item to be used in all versions of the 2070 controller. The 2070 1E module shall be supplied complete with operating software. Ensure it contains the required files to be compatible with the current GDOT applications software.

3. 2070 2A Field I/O Module

   The 2070 2A Field I/O module may be supplied as a separate item. The 2070 2A Field I/O module shall consist of the Field Controller Unit; Parallel Input/Output Ports; other Module Circuit Functions (includes muzzle jumper); Serial Communication Circuitry; Module Connectors C1S, C11S and C12S mounted on the module front plate; VDC Power Supply (+12VDC to + 5VDC) and required software. Ensure it contains any configuration jumpers to be compatible with current GDOT Applications software. Ensure the 2070 2A field I/O Module functions with a Model 2070L or 2070LB Controller Assembly and is compatible with current GDOT applications software.

4. 2070 2B Field I/O Module:

   The 2070 2B Field I/O module may be supplied as a separate item and consist of the Serial Communication Circuitry, DC power Supply, and Module Connector 12S mounted on the module front plate only. Ensure it contains any configuration jumpers to be compatible with current GDOT Applications software. Ensure the 2070 2B field I/O Module functions with a Model 2070 LC or 2070LN1 Controller Assembly and is compatible with current GDOT applications software.

5. 2070 2N Field I/O Module:

   The 2070 2N Field I/O module may be supplied as a separate item and provides a NEMA TS2-1compatible SDLC interface via Serial Port 3. AC power to the 2070 Unit and Fault Monitor Logic Output via 2070 Serial Port 5 and Output Frame Byte 9 Bit 6 to the NEMA TS2 Cabinet Monitor Unit (CMU). Ensure it contains any configuration jumpers to be compatible with current GDOT Applications software. Ensure the 2070 2N field I/O Module functions with a Model 2070 LN2 Controller Assembly and is compatible with current GDOT applications software.

6. 2070 3B Front Panel Display Module:

   The 2070 3B Display Module may be supplied as a separate item and provides a Front Panel Assembly controller, two keyboards, AUX switch alarm bell and an 8 line by 40 character display. This assembly shall also include a panel with latch assembly and two TSD #1 hinge attaching devices, assembly PCB, external serial port connectors, CPU active LED indicator, contrast adjustment knob, and Front Panel Harness. Ensure it contains any configuration jumpers to be compatible with current GDOT Applications software. Ensure the 2070 3B Front Panel Assembly Module functions with Models 2070L, 2070LC, 2070LN1 and 2070 LN2 Controller Assemblies and is compatible with current GDOT applications software. Ensure the hardware hinge attaching devices mate with existing 2070 assemblies. Ensure the Front Panel Harness is connected to the front panel via a removable connector. Ensure the front panel connector supports the aux switch.

7. 2070 3C Front Panel Display Module:

   The 2070 3C Display Module may be supplied as a separate item and provides a System Serial Port 6Lines, Isolated and vectored to Connector C60S. This assembly shall also include a panel with latch assembly and two TSD #1 hinge attaching devices, assembly PCB, external serial port connectors, CPU active LED indicator, and Front Panel Harness. Ensure it contains any configuration jumpers to be compatible with current GDOT Applications software. Ensure the 2070 3B Front Panel Assembly Module functions with Model 2070LB Controller Assembly and is compatible with current GDOT applications software. Ensure the hardware hinge attaching devices mate with

existing 2070 assemblies. Ensure the Front Panel Harness is connected to the front panel via a removable connector. Ensure the front panel connector supports the aux switch.

8. 2070 4B Power Supply Module:

   The 2070 4B Power Supply Module may be supplied as a separate item and is an independent, self contained module. Ensure that it is vented and cooled by convection only. Provide module that slides into power supply compartment from the back of the chassis and is attached to the Backplane mounting surface by its four TSD #3 Devices. Ensure the module supplies at least 3.5 amperes of +5VDC. Ensure the 2070 4B Power Supply Module is compatible with Models 2070L, 2070LB, and 2070LC Controller Assemblies and is compatible with current GDOT applications software. Ensure the connection harness PS 2 on existing units can be mated with the 4B module supplied. A 2070 4A Power Supply Module may be provided in place of a 4B module as long as it is labeled as such and there is no additional cost to GDOT. Ensure the module supplied is appropriately marked as a 4B or 4A module.

9. 2070 4NB Power Supply Module:

   The 2070 4NB Power Supply Module may be supplied as a separate item and is an independent self contained module. Ensure that it is vented and cooled by convection only. Provide module that slides into power supply compartment from the back of the chassis and is attached to the Backplane mounting surface by its four TSD #3 Devices. Ensure the module supplies at least 3.5 amperes of +5VDC. Ensure the 2070 4B Power Supply Module is compatible with Models 2070 LN1 and 2070 LN2 Controller Assemblies and is compatible with current GDOT applications software. Ensure the connection harness PS 2 on existing units can be mated with the 4B module supplied. Ensure the 4NB power supply module supports the NEMA TS1 and TS2 Standards. A 2070 4A Power Supply Module may be provided in place of a 4B module as long as it is labeled as such and there is no additional cost to GDOT. Ensure the module supplied is appropriately marked as a 4NA or 4NB module.

10. 2070 6B Communications Module:

    The 2070 6B Communications Module is supplied as a separate item. The 6B communications module is a dual async/modem serial module. Ensure the module supports both Serial and modem FSK communications on both of two separate ports. Ensure the Modem data baud rate supports 0 to 9600. Ensure the module is configured to support FSK communications on the C2S connection. Ensure it contains any configuration jumpers to be compatible with current GDOT Applications software.

11. 2070 7A Communications Module:

    The 2070 7A Communications Module may be supplied as a separate item. The 7A communications module is a dual async serial communications module. Ensure the module supports serial communications on both ports. Ensure it contains any configuration jumpers to be compatible with current GDOT Applications software.

12. 2070 8 Field I/O Module:

    The 2070 8 Field I/O Module may be supplied as a separate item. The 8 Field I/O Module consists of the module chassis, module power supply, Field Control Unit Controller, parallel input/output ports, serial communications circuits and module connectors. Ensure the EX1 connector is provided with appropriate mating connections to interface with either 6B or 7A communications modules. Ensure the 2070 8 Field I/O module is provided with the appropriate mating connector to mate with the C12S connector on the 2070 2B Field I/O module. Ensure the 2070 8 Field I/O module functions as part of a Model 2070 LN1 controller.

13. 2070 D Panel:

    The 2070 D panel is supplied as a separate item. The 2070 D panel supports the inputs and outputs of the “D” connector provided on a 2070-8 module which is also part of a Model 2070 LN1. Ensure the “D” Connector panel supports all 61 pins with a connecting MS “D” connector and terminal blocks. Ensure the 2070 D Panel provides adequate cable length to allow attachment in an existing NEMA Cabinet. Ensure that the terminal blocks allow for two connections.

B. Fabrication

General Provisions 101 through 150.

C. Acceptance

(See Subsection 925.2.02 for compliance with CALTRANS QPL).

D. Materials Warranty:

(See Subsection 925.2.01.D for Materials Warranties).

925.2.04 Cabinet Assemblies

A. Requirements

In addition to the CALTRANS Specifications, ensure that the cabinet assembly conforms to the requirements listed below, which take precedence over conflicting CALTRANS Specifications.

1. Cabinet configuration:

   Supply cabinets in accordance with these Specifications. Equip the cabinets with auxiliary equipment as follows:

   a. Model 332A Cabinet:

      Lower input field termination panel

      1 – Model 242 DC Isolator in Slot 14 of Upper Input File

      4 – Flash Transfer Relays

      2 – Model 204 Flashers

      1- Auxiliary Cabinet Shelf to support Communication Devices

      1- 4 Position Power Strip

      1- Manual push button assembly

   b. Model 336S Cabinet:

      1-Model 242 DC Isolator in Slot 14 of Input File

      4- Flash Transfer Relays

      2-Model 204 Flashers

      1- Auxiliary Cabinet Shelf to support Communication Devices

      1- 4 Position Power Strip

      1- Manual push button assembly

      1-"M" Base Adapter installed (Base Mount Cabinets Only)

      1-Aluminum Cover Plate for Cabinet Bottom (Pole Mount Cabinets Only)

   c. Model 337 Cabinet

      3-Flash Transfer Relays

      1-Model 204 Flasher

      1- Manual push button assembly

   d. Model 334 Cabinet with Auxiliary Output File for Ramp Metering Operations

      1- Auxiliary Equipment Shelf

      1- Output/PDA Type 3 with Model 206 24 Volt DC Power Supply with flash transfer relay

      1- Model 208 Monitor Unit

      1-Load Switch Model 200

      1- 4 Position Power Strip

      1- Lower Input Field Termination Panel

      1- Detector Test Switch Panel

   NOTE: Include above components in cabinet at time of delivery.

   Other auxiliary cabinet components such as controllers, monitors, load switches, etc. will be ordered as separate items.

2. Finish

Use cabinets that have a bare aluminum finish (see Subsection 925.2.07.A.1 for controller-cabinet minimum fabrication Specifications).

3. Locks

   Equip the main cabinet door with locks that accept No. 2 Corbin keys. Provide two sets of keys with each cabinet. One set of keys is defined as one – No. 2 key and one - police panel key.

4. Power

   Equip the cabinet assemblies with a power distribution assembly to generate AC and DC power for the electronic components, except the DC power for the controller units. Provide the Model 332 and 336S cabinets with a DC isolator for stop time/flash sense, located in slot 14 of the input file.

5. Mounting

   Equip the cabinets for pole or base mounting, as specified in the Plans.

   a. Base Mount

      Supply Model 336S cabinets, when specified as base mount, with an “M” base-mounting adapter installed.

   b. Pole Mount

      Supply Model 336S or 337 cabinets, when specified as pole mount, with two exterior pole mounting brackets that allow for mounting on steel, concrete, and timber poles.

      Ensure that the bracket mounting holes are properly reinforced with metal plates of adequate size and strength, welded longitudinally across the inside depth of the cabinet.

      Ensure that the exterior-mounting bracket is shipped installed on the cabinet housing. Additionally, provide an aluminum plate, which covers the bottom cabinet opening.

6. Unused Phase Monitoring

   Provide odd-phase reds with ballast resistor (2K, 10 watt) dummy loads. Do not wire the cabinet to monitor pedestrian yellow indications. When auxiliary output file is used provide resistors for overlaps.

   Neatly lace, label and bundle the wiring from the signal monitor for pedestrian yellow monitoring on the back panel.

7. Red Monitoring

   Provide a connector and terminal assembly designated as P20 for monitoring the absence of red as an integral part of the output file. Terminate the connector and ensure compatible with the cable and C connector of a Type 2010 conflict monitor unit capable of monitoring the absence of red.

   Provide the pin assignments of the P20 connector and terminal assemble with the cabinet Plans.

   Ensure that the P20 connector is physically alike to the cable and connector of a Type 2010 conflict monitor unit to prevent the absence of red cable connector from being inserted into the P20 connector 180 degrees out of alignment.

   Submit details for programming of the unused red channels for approval.

8. Cabinet Light

   Include in each cabinet one fluorescent strip lighting fixture mounted inside the top front portion of the cabinet. Do not use screw in type fluorescent lamp.

   The fixture includes a cool white lamp, covered, and operated by a normal power factor, UL listed ballast.

   Install a door-actuated switch to turn on the cabinet light when either door is opened.

   Cabinet fan and light shall be fed from 15 amp equipment breaker.

9. Cabinet Interlock

   Do not install the interlock circuit, as detailed in the CALTRANS Specifications.

10. Cabinet Drawer

    Equip each Model 334, 332A, and 336S cabinet with an aluminum storage compartment mounted in the rack assembly with the approximate following dimensions: 16 inches (400 mm) wide, 14 inches (350 mm) long, and 1.75 inches (44 mm) deep.

    Mount this compartment directly under the Type 2070 controller. Provide a drawer with telescoping drawer guides to allow full extension from the rack assembly.

When extended, the storage compartment opens to provide storage space for cabinet documentation and other miscellaneous items.

Ensure that the storage compartment be of adequate construction to support a weight of 25 pounds (12 kg) when extended.

Provide a top for the storage compartment that has a non-slip plastic laminate attached, which covers a minimum of 90% of the surface area of the top.

11. Auxiliary Equipment Shelf

    Provide a "shelf" in each cabinet that provides a location to mount Fiber modem, dialup modem and/or Field hardened switch. Provide shelf in location that allows easy access to AC power outlets and communications links (telephone, interconnect). Locate shelf so as not block access to other equipment or modules including Battery Backup System.

12. Power Strip

    Equip each cabinet with a metal power strip (minimum of 4 outlets) to support AC power for external communications devices in cabinet. Provide metal strip that is mounted vertically on the rear rail. Ensure that the power strip may be used by block power supplies such that the block power supply does not block other outlets. Attach power strip to a permanent location that is easily accessible to devices in the rear of the cabinet. Provide hard wire connection to the Cabinet AC power, controlled by a 15 amp breaker. Do not use plug in power strips.

13. Surge Protection

    Equip each cabinet with devices to protect the control equipment from surges and over voltages.

    Design the surge protector panels to allow for adequate space for a wire connection and surge protector replacement without the removal of terminal blocks or panels. Provide surge protectors for the input sections as detailed below and as shown in the Input Terminal and Surge Arrestor Detail.

    Supply surge protectors that meet the following Specifications.

    a. AC Service Input

    - Include a surge protection unit for each cabinet on the AC service input that meets or exceeds the following requirements: Provide a hybrid type power line surge protection device on the cabinet service panel.
    - Install the protector between the applied line voltage and earth ground.
    - Use a surge protector capable of reducing the effect of lightning transient voltages applied to the AC line that conforms to the following:

Peak surge current for an 8 x 20 μs waveform:	20,000A for 20 occurrences
Clamp voltage @ 20,000A:	280V max
Maximum continuous operating current:	@ 120V / 60 Hz 10A
Series Inductance:	AC Line/AC Neutral - 200 micro henries
Response time:	Voltage never exceeds 280V during surge
Spike suppression for +/- 700 V spike:	+/- 40 V deviation from sine wave at all phases Angles between 0 and 180 degrees.

    - Provide a protector that is modular and uses a 12 pin Beau connector with the following terminals:

      Main Line (AC line first stage terminal)

      Main Neutral (AC neutral input terminal)

      Equipment Line In (AC line second stage input terminal, 10A)

      Equipment Line Out (AC line second stage output terminal, 10A)

      Equipment neutral out (neutral terminal to protected equipment)

      GND (Earth connection)

    - Supply a protector that is epoxy encapsulated in a flame-retardant material.
    - Configure the Equipment Line Out to provide power to the Type 2070 and to the 24 V power supply.

    b. AC+ Interconnect Cable Inputs

Use a surge protection device to protect each AC interconnect line as it enters the cabinet with a surge protection device that meets or exceeds the following requirements:

- 3-electrode gas tube type of surge arrestor
- Striking voltage of 300-500 V DC with a minimum holder over voltage of 155V DC
- A three terminal device, one of which is connected to ground, the other two are connected across each input respectively
- The units must meet the following minimum requirements:

Impulse breakdown:	Less than 100V in less than 1.1 μs at 10 kV/μs
Impulse breakdown balance:	0.01 microsecond (or less) difference at 10 kV/μs impulse
Energy application:	Withstands 20A AC for one (1) second applied ten (10) times at three (3) minute intervals on either section
Current rating:	10,000A (8 x 20 μs impulse)
Capacitance:	6 pF, line to ground

c. Inductive Loop Detector Inputs

Provide surge arrestors in the cabinet as shown in Table 925-5, Table 925-7 or Table 925-9 for the applicable cabinet. Protect each inductive loop detector channel input by an external surge protection device that meets or exceeds the following requirements:

- A three-terminal device, two (2) of which are connected across the signal inputs of the detector with the third connected to the chassis ground to protect against common mode damage.
- Instantly clamps differential mode surges (induced voltage across the loop detector input terminals) via a semiconductor array. The array appears as a low capacitance to the detector.
- Clamps common mode surges (induced voltage between the loop leads and ground) via solid state clamping devices.
- Withstand 25-100A surge current occurrences of a 10 x 700 μs waveform.
- Have the following clamp characteristics:

Maximum break over voltage:	170 V
Maximum on-stage clamping voltage:	3V
Response Time:	<5 ns
Off-stage leakage current:	<10 μA
Capacitance:	less than 220 pf

- Ensure that the unit also meets the following minimum requirements:

Peak surge current:	6 times
Differential mode:	400 A (8 x 20 ms)
Common mode:	1,000 A (8 x 20 ms)
Estimated occurrences:	500 @ 200 A
Response time:	40 ns
Input capacitance:	35 pF typical
Temperature:	-40° F to +185° F (-40º C to 85º C)
Mounting:	No. 10-32 x 3/8-inch (No. 5 x 10 mm) bolt
Clamp voltage @400 A diff.	Mode: 30 V max.
Clamp voltage @1,000 A comm.	Mode: 30 V max.

d. Signal Load Switches (Switchpacks)

Provide the output of all switchpacks in all output files and output/PDAs with metal oxide varistors (MOV) tied from the AC positive field terminal to the chassis ground to protect switchpacks from surges on the AC output lines

Ensure that these MOVs meet or exceed these requirements:

- Steady state sinusoidal voltage (RMS) rating at 50 to 60 Hz of at least 150 V at 77 ºF (25 °C)
- Steady state applied DC voltage rating of at least 200 V at 77 ºF (25 °C)
- Transient energy rating is of at least 80 J for a single impulse of 10/1,000 μs current waveform at 77 ºF (25 °C)
- Peak current rating of 6,500 A for a single impulse of 8/20 μs waveform with the rated continuous voltage applied
- Varistor voltage of at least 212 V at 1.0mA of DC current applied for the duration of 20 μs to 5s
- Clamping voltage of at least 395 V with an applied 8/20 μs impulse of 100 A
- Typical capacitance at a frequency of 0.1 to 1.0 MHz of 1600 pF
- Two-terminal device, one of which is connected to the AC output of the signal load switch on the output file terminals (backside of the field terminals) with the other connected to AC neutral

e. Communication Inputs

Protect low voltage communications input as it enters the cabinet with a solid-state surge protection unit that meets or exceeds these requirements:

- Dual pair (4-wire) module with a printed circuit board connector, double sided and gold plated for reliability
- Ability to mate with and be installed in a 10-circuit Buchanan connector Part Number PCB1B10S or Tyco Part Number 2-1437410-3 or equivalent
- Usable as two independent signal pairs
- The data circuits pass through the protection in a serial fashion
- C2 connector of the 2070 controller that terminates on the line side of the unit
- Communication field wires for this local side that terminate on the line side of the unit
- Ground terminals connected to power ground
- Ensure that the unit meets the following minimum requirements:

Peak surge current:	10 kA (8 x 20 μs wave shape)
	500A (10 x 700 μs wave shape)
Occurrences @ peak:	50 typical
Response time:	<1ns
Voltage Clamp:	8V line to line
Series Resistance:	24 Ω total
Temperature:	-40 °F (-40 °C) to +185 °F (85 °F)
Primary protector:	3 element gas tube 5kA, (8 x 20μs wave shape), per side
Secondary protector:	Silicon avalance, 1.5 kW minimum

f. Low Voltage DC Inputs

Provide an external surge protection device for each low voltage DC input channel which meets the same requirements as the communication inputs with the following exception of the Voltage clamp, which shall be 30 V line-to-line.

14. Type 2010 Signal Monitors:

a. Introduction

This Specification sets forth the minimum requirements for a rack-mountable, sixteen channel, solid-state 2010 Signal Monitor for Traffic Cabinet Assembly. Ensure that as a minimum, the Signal Monitor complies with all

Specifications outlined in Chapter 3 Section 6 of the *California TEES*, August 2002. Where differences occur, this Specification governs. Ensure that the manufacturer of the unit is listed on the current California Department of Transportation (CALTRANS) Qualified Products List (QPL) for signal monitors.

Provide a Signal Monitor that is capable of monitoring sixteen channels consisting of a Green input, a Yellow input, and a Red input for each channel. Ensure that the unit also includes the enhanced monitoring functions described in Subsection 925.2.04.A.15.

b. Monitor Functions

Except for Conflict faults, compute all fault timing for each channel individually.

1.) Conflict Monitoring

Ensure that the Signal Monitor is able to detect the presence of conflicting green or yellow signal voltages on the AC field terminals between two or more non-compatible channels. A Conflict fault (CONFLICT) shall be a latching fault.

2.) Conflict Recognition Time

Ensure the Signal Monitor shall trigger when voltages on any conflicting channels are present for more than 500 ms. Ensure that the Signal Monitor does not trigger when voltages on any conflicting channels are present for less than 200 ms. Conflicting signals sensed for more than 200 ms and less than 500 ms may or may not trigger the unit.

3.) 24VDC Monitoring VDC

Ensure that the Signal Monitor is able to detect that the cabinet +24 Vdc supply has fallen below 18 Vdc. A 24VDC failure (VDC FAIL) shall be a latching fault.

4.) 24VDC Recognition Time

Ensure that the Signal Monitor shall trigger when the voltage on the +24V input is below 18 Vdc for more than 500 ms. Ensure that the Signal Monitor does not trigger when the voltage on the +24V input is below 18 Vdc for less than 200 ms. A voltage level of +22 Vdc will be required to prevent the unit from triggering.

5.) Controller Watchdog Monitoring

Ensure that the Signal Monitor triggers when the Watchdog input does not toggle within the programmed time period (WDT ERROR). Ensure that the unit remains latched in the fault state until reset by the Reset button, an External Reset input command, or AC Line voltage restoring from an AC Line Brownout event. Ensure that a reset resulting from an AC Line Brownout event does not clear the WDT ERROR LED.

a. Controller Watchdog Latch Option

Ensure a programming option sets the Watchdog monitoring function to a latching mode and that only a reset from the Reset button or External Reset input can clear a Watchdog fault. An AC Line brownout condition will not reset the fault.

b. Controller Watchdog Recognition Time

Ensure a programming option sets the maximum Watchdog recognition time to: 1000 + or - 100 ms; or 1500 + or - 100 ms.

c. Controller Watchdog Enable Switch

Provide an internal switch to disable the Watchdog monitoring function. Mount the switch on the PCB and be clearly label "WD ENABLE - ON...OFF". Ensure that placement of the switch in the OFF position causes monitoring of the Watchdog to be inhibited.

d. WDT ERROR LED Control

Ensure that the WDT ERROR LED illuminates when the unit has been triggered by a Watchdog fault. Ensure that it can only be cleared by a reset command from the front panel Reset switch or External Reset input. If the Watchdog monitoring function is inhibited due to the Watchdog Enable switch, the WDT ERROR LED shall flash at a 0.5 Hz rate.

6.) AC Line Monitoring

a. AC Line Brownout Recognition

Ensure that the Signal Monitor is able to detect that the AC Line has fallen below 98 + or - 2 Vac for greater than 400 + or - 50 ms. This shall force the output Relay to the de-energized "fault" state, enable the Stop-Time output, and cause the AC POWER LED to flash at a 2 Hz rate. Ensure that the unit maintains this state until the AC Line voltage rises above 103 + or - 2 Vac for greater than 400 + or - 50 ms. Provide a jumper option which will change the AC Brownout dropout level to 92 + or - 2 Vac and the restore level to 98 + or - 2 Vac.

b. AC Line Power-up and Brownout Delay Time

When the AC Line is greater than 103 + or - 2 volts after power-up or Brownout restore, ensure that the Signal Monitor holds the Output Relay in the de-energized "fault" state and enable the Stop-Time output, for a period of not less than 6.0 + or - 0.5 seconds and not greater than 10.0 + or - 0.5 seconds. Ensure that this flash interval is terminated after at least 6.0 + or - 0.5 seconds if the Signal Monitor has detected at least five transitions of the Watchdog input. If the Signal Monitor does not detect five transitions of the Watchdog input before 10.0 + or - 0.5 seconds, ensure that the Signal Monitor goes to the fault state. During this interval, ensure that the AC POWER LED flashes at a 4 Hz rate.

7.) Red Fail Monitoring

Ensure that the Signal Monitor is able to detect the absence of an active voltage on the green and yellow and red field signal inputs of a channel. Red Fail fault (RED FAIL) shall be a latching fault. Ensure that the Red Fail monitoring function is enabled for all channels except when the Red Enable input is not active, or pin #EE is active, or Special Function #1 input is active, or Special Function #2 input is active.

a. Red Fail Recognition Time

Ensure the Signal Monitor triggers when an active voltage on one of the three inputs of a channel are absent for more than 1500 ms. Ensure that the Signal Monitor does not trigger when an active voltage on one of the three inputs of a channel are absent for less than 1200 ms. Channels without proper voltages sensed for more than 1200 ms and less than 1500 ms may or may not trigger the unit. Provide an option switch (RF 2010) which will change the fault recognition time to between 700 ms and 1000 ms.

b. Red Interface Cable Fault

Ensure a programming option is provided such that operating without the Red Interface cable installed shall cause the Signal Monitor to enter the fault mode causing the Output relay contacts to close and enabling the Stop-Time output to the controller. To indicate this fault mode, ensure that the Red Fail indicator is illuminated with all fault channel indicators Off.

Ensure that any Red Fail preemption control to the monitor uses the Special Function inputs #1 or #2.

8.) Dual Indication Monitoring

Ensure that the Signal Monitor is able to detect the presence of active voltage on the green and yellow, green and red, or yellow and red field signal inputs of a channel. GYR Dual Indication fault (DUAL IND) shall be a latching fault. Ensure this function is enabled on a per channel basis using dip switches mounted on the PCB labeled "CH1" through "CH16". Ensure that the GYR Dual Indication monitoring function is enabled for all selected channels except when the Red Enable input is not active or pin #EE is active.

a. GY Dual Indication Monitoring

Ensure that the Signal Monitor is able to detect the presence of active voltage on the green and yellow field signal inputs of a channel. GY Dual Indication fault (DUAL IND) shall be a latching fault. Enable this function with a dip switch on the PCB labeled "GY ENABLE". When the switch is in the ON position, monitor all channels for simultaneous active green and yellow inputs on a channel. When selected by the GY ENABLE switch, ensure that the GY Dual Indication monitoring function is disabled when pin #EE is active.

b. Dual Indication Recognition Time

Ensure that the Signal Monitor triggers when multiple inputs are active on a channel for more than 500 ms. Ensure that the Signal Monitor does not trigger when multiple inputs are active on a channel for less than 250 ms. Channels with multiple voltages active for more than 250 ms and less than 500 ms may or may not trigger the unit.

9.) Clearance (Short or Absent Yellow) Monitoring

Ensure that the Signal Monitor is able to detect that a channel has not provided an adequate Yellow Clearance interval during a green to yellow to red sequence. A Sequence failure (SEQUENCE) shall be a latching fault. Ensure that this function is enabled on a per channel basis using dip switches mounted on the PCB labeled "CH1" through "CH16". Ensure that the Sequence monitoring function is enabled for all selected channels except when the Red Enable input is not active or pin #EE is active.

10.) Clearance Recognition Time

Ensure that the Yellow Clearance interval is 2.7 seconds

11.) Flickering Indication Detection

Ensure that the Signal Monitor provides a method of detecting Conflict, Red Fail, and Dual Indication faults that result from intermittent or flickering field signal inputs that may not meet the duration requirements but continue to flicker for an extended period of time. These flickering indications shall result in a latching fault with an indication illuminated along with the resulting Conflict, Red Fail, or Dual Indication indicator. Provide an option switch to disable this option.

12.) Configuration Change Monitoring

- On power-up, reset, and periodically during operation, ensure that the Signal Monitor compares the current configuration settings with the previously stored value and if the settings have changed, the Signal Monitor automatically logs the new setting. Ensure that these settings include the permissive diode matrix, all switches, all jumpers, and the Watchdog Enable switch.
- Provide a programming option such that any change in the configuration parameters will cause the Signal Monitor to enter the fault mode causing the Output relay contacts to close and enabling the Stop-Time output to the controller. To indicate this fault mode ensure that the PCA indicator will flash at a 4 Hz rate. Depressing the Reset button for 5 full seconds is required to clear this fault and log the new configuration parameters.
- If the programming option is not selected, ensure that the unit does not set the fault mode but will still log the configuration change.

13.) Program Card Ajar

Ensure that when the Programming Card is removed or not seated properly, the Signal Monitor forces the Output Relay to the de-energized "fault" state, enable the Stop-Time output, and illuminate the PCA LED. A reset command from the front panel Reset switch or External Reset input is required once the Program Card is in place.

14.) Exit Flash

When the Signal Monitor exits the flash state (Output relay de-energized) as a result of a Reset command or AC Line brownout restore, ensure that the Stop Time output goes to the inactive state 250 + OR - 50 ms before the Output relay transfers to the energized state. This transition will provide an early indication to the Controller Unit that the cabinet will transfer from flash to signal operation.

c. Display Functions

Ensure that it is possible to view the active channels for each individual color (GYR) during operation and when latched in a fault state. When the Signal Monitor is latched in a fault state ensure that it is also be possible to view the active channels for each individual color and fault status for each channel for the current fault and the two previous faults.

1) Previous Fault GYR Display

- When the Signal Monitor has been triggered by a fault the channel status display will alternate between the channels which were involved in the fault (fault status) for 2 seconds, and the field signals active at the time of the fault for 6 seconds. The channels involved in the fault will flash their respective Green, Yellow, and Red indicators simultaneously at a 4 Hz rate for the 2 second interval.
- The two previous faults may also be displayed individually. This status is not reset by an AC Line power interruption. To enter this display mode remove the Program Card. The sequence is as follows:

Reset	Event	PCA LED	Fault Status LEDs	Channel Status LEDs
---	#1	Single flash	Current Fault Status (newest)	Current Field status
#1	#2	Double flash	Event #2 Fault Status	Event #2 Field status
#2	#3	Triple flash	Event #3 Fault Status (oldest)	Event #3 Field status
(repeats back to top)				

d. Event Logging Functions

Ensure that the Signal Monitor is capable of storing in non-volatile memory a minimum of 100 events. Mark each event with the time and date of the event. These events consist of fault events, AC Line events, reset events, and configuration change events. Provide a graphical means of displaying the signal states of all field inputs for 30 seconds prior to a fault trigger event. Provide the capability to assign a four-digit identification number to the unit shall be provided. Upload the event logs to a PC using the serial port of the Signal Monitor and software provided by the manufacturer.

Ensure each event log report contains the following information:

- Monitor ID#: a four digit (0000-9999) ID number assigned to the monitor.
- Time and Date: time and date of occurrence.
- Event Number: identifies the record number in the log. Event #1 is the most recent event.

1) Monitor Status Report (CS)

Ensure the Current Status report contains the following information:

- Fault Type: the fault type description.
- Field Status: the current GYR field status and field RMS voltages if the monitor is not in the fault state, or the latched field status and field RMS voltages and fault channel status at the time of the fault.
- Cabinet Temperature: the current temperature if the monitor is not in the fault state, or the latched temperature at the time of the fault.
- AC Line Voltage: the current AC Line voltage if the monitor is not in the fault state, or the AC Line voltage at the time of the fault.
- Control Input Status: the current state and RMS voltages of the Red Enable input, EE input, and Special Function #1 and #2 inputs if the monitor is not in the fault state, or the status latched at the time of the fault.

2) Previous Fault Log (PF)

Ensure the Previous Fault log contains the following information:

- Fault Type: the fault type description.
- Field Status: the latched field status with RMS voltages, and fault channel status at the time of the fault.
- Cabinet Temperature: the latched temperature at the time of the fault.
- AC Line Voltage: the AC Line voltage at the time of the fault.
- Control Input Status: the latched state of the Red Enable input, EE input, and Special Function #1 and #2 inputs at the time of the fault.

3) AC Line Event Log (AC)

The AC Line log shall contain the following information:

- Event Type: describes the type of AC Line event that occurred.

  Power-up—AC on, monitor performed a cold start

  Interrupt—AC Line < Brownout level

  Restore—AC restored from brown-out or interruption (AC Off), no cold start
- AC Line Voltage: the AC Line voltage at the time of the event.

4) Monitor Reset Log (MR)

Ensure the Monitor Reset log contains the following information:

The monitor was reset from a fault by the front panel Reset button or External Reset input.

5) Configuration Change Log (CF)

Ensure the Configuration Change log contains the following information:

a. Program Card Matrix: the permissive programming for each channel.

b. Yellow Disable Jumpers: the Yellow Disable programming for each channel.

c. Dual/Sequence Switches: the switch programming for each channel.

d. Option Switches: RF 2010, RP Disable, GY Enable, SF1 Polarity, Sequence Timing, Minimum Flash Enable, Configuration Fault Enable, Red Cable Fault enable, AC Brownout timing.

e. Watchdog Programming: Watchdog Enable, Watchdog Latch, and Watchdog timing.

f. Configuration CRC: A unique CRC value which is based on the configuration of items #a though #e above.

Indicate on the log, which items have been changed since the last log entry.

6) Signal Sequence Log

Provide a log that graphically displays all field signal states for up to 30 seconds prior to the current fault trigger event. Ensure that the resolution of the display is at least 50 milliseconds.

e. Communications Functions

1) Controller Unit Communications

- Type A: Ensure that the Signal Monitor is compatible with the protocol of the current GDOT licensed firmware for 2070 controllers and Central System Control. Ensure the 2010 Conflict Monitor supplied is able to communicate via a serial link. to the 2010 Controller and then to a Central System using the current licensed GDOT Central System Software for reporting, configuring and logging.
- Type B: Ensure that the Signal Monitor is compatible with the protocol of the current GDOT licensed firmware for 2070 controllers and Central System Control. Ensure the 2010 Conflict Monitor supplied is able to communicate via a RJ-45 connector (Ethernet).

2) Personal Computer Communications

Have the manufacturer provide software to access the Signal Monitor status and event logs described in Subsection 925.2.04.A.14.d. Ensure this software operates with current version of Microsoft Windows or Windows XP™

f. Hardware

1) Red Monitoring

a. Red Field Inputs

Ensure that the Signal Monitor is capable of monitoring sixteen Red field signals. Ensure that a Red input is sensed active when the input voltage exceeds 70 Vrms. Ensure that a Red input is sensed not active when the input voltage is less than 50 Vrms. A Red input may or may not be sensed active when the input voltage is between 50 Vrms and 70 Vrms.

b. Red Enable Input

Ensure that the Red Enable input provides an AC input to the unit which enables Red Monitoring, Dual Indication Monitoring, and Sequence monitoring when the input is sensed active.

Ensure that the Red Enable input is sensed active when the input voltage exceeds 70 Vrms. Ensure that the Red Enable input is sensed not active when the input voltage is less than 50 Vrms. The Red Enable input may or may not be sensed active when the input voltage is between 50 Vrms and 70 Vrms.

c. Special Function Preemption Inputs

Ensure that the Special Function Preemption inputs #1 and #2 provide an AC input to the unit which disables only Red Fail Monitoring (Lack of Output) when either input is sensed active.

Ensure that a Special Function input is sensed active when the input voltage exceeds 70 Vrms. Ensure that a Special Function input is sensed not active when the input voltage is less than 50 Vrms. A Special Function input may or may not be sensed active when the input voltage is between 50 Vrms and 70 Vrms.

Use a PCB mounted switch to provide the option to invert the active status of the Special Function #1 input. When the switch is in the ON position, ensure that the Special Function #1 input is sensed not active when the input voltage exceeds 70 Vrms. Ensure that the Special Function #1 input is sensed active when the input voltage is less than 50 Vrms. The Special Function #1 input may or may not be sensed active when the input voltage is between 50 Vrms and 70 Vrms.

d. Red Interface Connector

This connector provides the required inputs for the unit to monitor the Red field signal outputs. Ensure the connector is a 20 pin connector that mates with the P20 Cable from the output file. Provide a high quality connector that is polarized to insure proper mating with the cable. Ensure Ejector latches are included to facilitate removal and prevent the cable from inadvertently disconnecting. Ensure the unit shall function as a standard 210 Signal Monitor when the cable is disconnected. Use the pin assignments shown in Table 925-1.

Table 925 -1 Red Interface Connector

Pin	Function	Pin	Function
1	Channel 15 Red	11	Channel 9 Red
2	Channel 16 Red	12	Channel 8 Red
3	Channel14 Red	13	Channel 7 Red
4	Chassis Ground*	14	Channel 6 Red
5	Channel 13 Red	15	Channel 5 Red
6	Special Function #2	16	Channel 4 Red
7	Channel 12 Red	17	Channel 3 Red
8	Special Function #1	18	Channel 2 Red
9	Channel 10 Red	19	Channel 1 Red
10	Channel 11 Red	20	Red Enable

*A jumper option shall be provided to allow the connection of Pin #4 to be made with Chassis Ground.

2) Front Panel

Ensure the front panel is constructed of sheet aluminum with a minimum thickness of 0.090 in. (2.286 mm), and finished with an anodized coating. Ensure the model information shall be permanently displayed on the front surface.

a. Indicators

Ensure that all display indicators are mounted on the front panel of the Signal Monitor and are water clear, T-1 package, Super Bright type LEDs. Ensure that all fault LEDs are red except the AC POWER indicator which is green. Provide a separate Red, Yellow, and Green indicator for each channel. Label the indicators and provide the information as follows:

- AC POWER

  Ensure the AC Power indicator flashes at a rate of 2 Hz when the unit has detected a low voltage condition as described in Subsection 925.2.04.A.15. Ensure the AC POWER indicator flashes at a rate of 4 Hz during the minimum flash interval as described in Subsection 925.2.04.A.15. Ensure that the indicator illuminates when the AC Line voltage level is restored above the brownout level. Ensure the indicator extinguishes when the AC Line voltage is less than 80 Vac.

- VDC FAILED

  Ensure the VDC FAILED indicator illuminates when a 24VDC fault condition is detected. This indicator remains extinguished if the monitor has not been triggered by a 24VDC fault.

- WDT ERROR

  Ensure the WDT ERROR indicator illuminates when a controller Watchdog fault is detected. Ensure the WDT Error indicator flashes ON once every 2 seconds if the WD Enable switch on the monitor is placed in the OFF position to disable Watchdog monitoring, or the AC Line voltage is below the Watchdog disable level.

- CONFLICT

  Ensure that the CONFLICT indicator illuminates when a conflicting signal fault is detected.

- DIAGNOSTIC

  Ensure the DIAGNOSTIC indicator illuminates when one of the following faults is detected: Internal Watchdog fault, Memory Test fault, or Internal power supply fault. This indicator is intended to inform the service technician of a monitor hardware or firmware failure.

- RED FAIL

  Ensure the RED FAIL indicator illuminates when an absence of signal is detected on a channel(s). Ensure the RED FAIL indicator flashes ON once every two seconds if the RED ENABLE input is not active, or a Special Function input is active, or the EE input is active

- DUAL IND.

  Ensure the Dual IND. indicator illuminates when a GY-Dual or GYR-Dual Indication fault is detected on a channel(s).

- CLEARANCE

  Ensure the Sequence indicator illuminates when the minimum Yellow Clearance time has not been met on a channel(s).

- PCA

  Ensure the PCA indicator illuminates if the Program Card is absent or not properly seated.

  If the unit is in the Diagnostic Display mode, ensure the PCA indicator flashes ON (once, twice, or three times) to indicate the fault event number being displayed. See Subsection 925.2.04.A.15.

- RP DETECT

  Ensure the RP DETECT indicator illuminates when the unit has detected a Conflict, Red Fail, or Dual Indication fault as a result of recurring pulse field inputs.

- CHANNEL STATUS

  Ensure that during normal operation the 48 Channel Status indicators display all active signals (Red, Green, and Yellow).

  In the fault mode, ensure that the Channel Status indicators display all signals active at the time of the fault for six seconds and then indicate the channels involved in the fault for 2 seconds.

b. Front Panel Control-Reset Button

- Provide a momentary SPST Control switch labeled RESET on the unit front panel to reset the monitor circuitry to a non-failed state. Position the switch on the front panel such that the switch can be operated while gripping the front panel handle. Ensure that a reset command issued from either the front panel button or External Reset input is a one-time reset input to prevent the unit from constant reset due to a switch failure or constant external input, and causes all LED indicators to illuminate for 300 ms.
- The Reset button also provides control of the Diagnostic Display mode. For a complete description of Diagnostic Display operation, see Subsection 925.2.04.A.15.

c. Serial Communications Connector

Use this connector to provide EIA-232 serial communications. Ensure that it is a high quality 9 pin metal shell D subminiature type with female contacts. Refer to Table 925-2 for Pin assignments.

Table 925-2 Serial Communications Connector

Pin	Function
1	DCD*
2	TX DATA
3	RX DATA
4	DTR (Data Terminal Ready)
5	SIGNAL GROUND
6	DSR
7	DSR*
8	CTS*
9	NC
* Provide Jumper options to allow the connection of Pin #4 to be made with Pin #7, and the connection of Pin #8 to be made with Pin #1.	

3) Electronics

a. RMS Voltage Sampling

Use high speed sampling techniques to determine the true RMS value of the AC field inputs. Sample each AC input at least 32 times per cycle. Ensure that the RMS voltage measurement is insensitive to phase, frequency, and waveform distortion.

b. Internal MPU Watchdog

Use a microprocessor for all timing and control functions. Verify continuing operation of the microprocessor by an independent monitor circuit, that forces the Output Relay to the de-energized "fault" state, enable the Stop-Time output, and illuminate the DIAGNOSTIC indicator if a pulse is not received from the microprocessor within 300 ms.

If the microprocessor should resume operation, ensure the Signal Monitor continues to operate. Ensure that this monitoring circuit is also configurable to latch in the fault state. Ensure the unit requires a power-up cycle to reset the circuit once it is triggered.

c. Sockets

In the interest of reliability, ensure that only the PROM memory device for the microprocessor firmware is socket mounted. Ensure that the PROM memory socket is a precision screw machine type socket with a gold contact finish providing a reliable gas tight seal. Low insertion force sockets or sockets with "wiper" type contacts are not acceptable.

d. Internal Power Supply

Use a built-in, high-efficiency switching power supply to generate all required internal voltages. Ensure that all supply voltages regulated. Failure of the internal power supply to provide proper operating voltages shall force the output Relay to the de-energized "fault" state, enable the Stop-Time output, and illuminate the DIAGNOSTIC indicator. Provide a user replaceable slow blow fuse for the AC Line input. Ensure the unit is operational over the AC Line voltage range of 75 Vac to 135 Vac.

e. EIA-232 Interface

Ensure the EIA-232 port interface electronics is electrically isolated from all monitor electronics except chassis ground.

f. Configuration Parameters

Select user-programmed configuration settings using PCB mounted switches or jumpers. Designs requiring a Personal Computer (PC) to program or verify the configuration parameters are not acceptable. Ensure that user-programmed configuration settings that are transferred to memory are

stored in a programmable read-only memory (PROM or EEPROM). Designs using a battery to maintain configuration data are not acceptable.

g. Field Terminal Inputs

Ensure that all 120 Vac field terminal inputs provide an input impedance of 150K 50K ohms and be terminated with a discrete resistor having a power dissipation rating of 0.5 Watts or greater and a voltage rating exceeding 350 volts.

h. Component Specifications

Ensure that all electrical components used in the Signal Monitor are rated by the component manufacturer to operate beyond the full unit operating temperature range of –29 °F to 165 °F(-34 °C to +74 °C).

i. Printed Circuit Boards

Ensure that all printed circuit boards meet the requirements of the *California Traffic Signal Control Equipment Specifications*, January 1989, plus the following requirements to enhance reliability:

- All plated-through holes and exposed circuit traces are plated with solder.
- Both sides of the printed circuit board are covered with a solder mask material.
- The circuit reference designation for all components and the polarity of all capacitors and diodes are clearly marked adjacent to the component. Ensure that Pin #1 for all integrated circuit packages is designated on both sides of all printed circuit boards.
- All electrical mating surfaces are gold plated.
- All printed circuit board assemblies are coated on both sides with a clear moisture-proof and fungus-proof sealant.
- All components and wire harnesses are mounted to the PCB using plated holes. "Piggy back" connections or jumper wires are not acceptable.

15. Model 208 Monitor Unit

Provide Model 208 Monitor Unit in accordance with CALTRANS TEES and the following. Provide monitor that is on the CALTRANS QPL and provides the pin assignment as shown in Table 925-3.

The Model 208 Monitor Unit shall reliably sense and cause a relay output contact (FAILED STATE) when monitoring the following:

- A Watchdog Timer (WDT) Timeout Condition
- Cabinet +24 VDC Power Supply below specified threshold

a. WDT Circuitry shall be provided to monitor a controller unit output line state routed to the monitor unit at its assigned pin. The WDT Circuitry shall sense any line state change and the time between the last change. No state change for 1.5 ± 0.1 seconds shall cause a FAILED state. The timer shall reset at each state change in a NON FAILED state.

1) Only the Unit Reset or a WDT inactive due to the voltage sense shall reset the WDT from a FAILED state.
2) A FAILED state caused by the WDT shall illuminate a front panel indicator light label “WDT ERROR”. The indicator shall remain ON until Unit Reset Issuance.
3) The WDT Circuitry shall sense the incoming VAC Line and when the voltage falls below 98 ± 2VAC for 50 ± 17 ms shall inhibit the WDT Function. When the WDT Circuitry sensed the incoming VAC Line rise above 103 ± 2VAC for 50 ± 2ms the WDT shall become active. A hysteresis between the Voltage Inhibit and the Voltage Active Setting shall be a minimum of 3 Volts.

b. Power Supply Monitor Requirements

1) The monitor unit shall sense the Cabinet +24 VDC Power Supply Output Voltage.
2) Voltages sensed at +18 VDC or below for a duration of 500 ms or longer shall cause a FAILDED state.
3) Voltages sensed at+22 VDC or above shall NOT cause a FAILED state.
4) Voltages sensed below +22 VDC for a duration of 200 ms or less shall NOT cause a FAILED state.
5) All timing and voltages conditions other than those specified above may or may not cause a FAILED state.

6) A FAILED state caused by sensing the power supply shall illuminate a front panel indicator light labeled "VDC FAILED". The indicator shall remain ON until Unit Reset.

7) Only Unit Reset shall reset the power supply sense circuitry from a FAILED state.

c. FAILED State Output Circuits

1) An electro-mechanical relay shall be provided to switch an output circuit during a FAILED state. The relay coil shall be energized in a NON FAILED State.

2) The relay contacts shall be rated for a minimum of 3 amperes at 120 VAC and 100,000 operations. Contact opening /closing time shall be 30 ms or less.

d. Monitor Unit Reset

1) A momentary SPST CONTROL switch labeled "RESET" shall be provided on the unit front panel to reset the monitor unit circuitry to a NON FAILED state. The switch shall be so positioned on the front panel that the switch can be operated while gripping the front panel handle.

2) The unit shall be provided with provision to drive an external NE2H light through a 56K Ohm, ½ Watt Series resistor (resident on unit)

3) The PDA Type 3 WDT Reset Input shall not be sensed by the unit

4) The output relay CONTACT FOR FAILED STATE shall be OPEN.

Table 925-3 Pin Assignments For Model 208 Monitor Unit

PIN	FUNCTION
1/44	DC Ground
2/43	WDT Ext. Reset
5/40	WDT IN
10/35	+24 VDC
15/30	AC-
17/28	Normally Open, Circ. #2
19/26	AC+
20/25	Normally Closed, Circ. #1
21/24	Circ. Common #1 & #2
22/23	WDT Lamp (External)
NOTE: Card connector keyed between pins 2 & 3, and pins 11 & 12.	

16. Model 242 DC Isolator

Provide Model 242 DC Isolators that are in accordance with the latest version of CALTRANS Specifications as referenced earlier in this section. Provide isolators that:

- Allow the 242 isolator input signal polarity to easily be inverted without the use of tools. Acceptable methods are removable jumpers or dip switches. Unacceptable methods are soldering or desoldering a diode or resistor.
- Output is OFF for input voltages greater than 12 volts;
- Output is ON for voltages of less than 8 volts that have a duration of at least 5 to 25 ms (optional 2-7 ms);
- Minimum output pulse width is 100 ms with a valid input (can be disabled);
- Output is optically isolated open collector NPN transistor;
- Capable of sinking 50 ma when on;
- Can register a new input within 25 ms of the old signal going away; and

- Output clamped on power up and down
- Compatible with 2070 controllers and latest version of CALTRANS TEES including errata

17. Model 200 Switchpack

    Provide Model 200 Switchpacks that are in accordance with the latest version of CALTRANS Specifications as referenced earlier in this section.

18. Model 204 Flasher Unit

    Provide Model 204 Flasher Units that are in accordance with the latest version of CALTRANS Specifications as referenced earlier in this section.

19. Flash Transfer Relay

    Provide Flash Transfer Relays that are in accordance with the latest version of CALTRANS Specifications as referenced earlier in this section.

20. Cabinet Model 332A

    Ensure surge protection conforms to Table 925-5 Required Surge Arrestors for Model 332A Cabinet.

    Supply Model 332A (lower input panel) cabinets, with housing Type 1B, and all components as described in these Specifications.

    Supply cabinets having two input files which conform to the CALTRANS Specifications and configured to accept two 2070 controllers in the top portion of the cabinet. Ensure the cabinet has two shelves provided for controller(s).

    Configure the cabinet for dial up communications. Mount a two (2) circuit Buchanan connector on the right side panel (from rear door).

    Mount a phone jack with a RJ11 connector above or to the right of the Buchanan terminal block.

    Wire the phone jack to the Buchanan and to the Terminal Block (TB0) in accordance with Figure 925-2.

    A manual jack shall be installed inside the cabinet. The jack shall intermate with a three circuit 1/4 inch (6.35 mm) diameter phone plug. The tip and ring (middle) circuits of the jack shall-be connected to the logic ground and the interval advance inputs of controller unit. When the manual hand cord is plugged into the jack and the pushbutton is pressed, logic ground shall be connected to the interval advance input of the controller unit.

    A Manual ON- OFF Switch shall be provided on the police panel which grounds the Manual Control Enable (C1 Pin 53) input to the controller whenever the switch is in the ON position and advance input (C1 Pin 80).

    A manual pushbutton with cord shall be provided. The cord shall have a minimum length of 6 feet (1.8 m). It shall have a 1/4 inch (6.35 mm) diameter, three circuit plug connected to one end and a manual pushbutton enclosed in a hand held enclosure at the other end. A complete cycle (push-release) of the manual pushbutton shall terminate the controller unit interval which is active except the vehicular yellow and all red clearance intervals. Cycling the push-button during the vehicular yellow or all red clearance intervals shall not terminate the timing of those intervals.

21. Cabinet Model 332A with Auxiliary Output File)

    Ensure that this unit meets the requirements of Subsection 925.2.04.A.20 above, except that the cabinet is configured with an Auxiliary Output File. Additionally, the field wiring terminals may be mounted on the rear of the input file.

22. Cabinet Model 336S (Base Mount)

    This unit meets the CALTRANS Specification with the addition of approximately 6 additional inches (150 mm) of cabinet height exclusive of the "M" base adapter. Configure the internal component layout so that the additional space is available in the bottom area of the cabinet cage. Ensure that the field wiring input panels and surge protection conform to Table 925-6 Model 336S Default Input File Assignment Detail and Table 925-7 Required Surge Arrestors for Model 336S Cabinet.

    Ensure that the C1 connector harness is provided with pins for all 104 inputs and outputs from the controller.

    A manual jack shall be installed on the police panel. The jack shall intermate with a three circuit 1/4 inch (6.35 mm) diameter phone plug. The tip and ring (middle) circuits of the jack shall-be connected to the logic ground and the interval advance inputs of controller unit. When the manual hand cord is plugged into the jack and the pushbutton is pressed, logic ground shall be connected to the interval advance input of the controller unit.

A Manual ON- Off Switch shall be provided on the police panel which grounds the Manual Control Enable (C1 Pin 53) input to the controller whenever the switch is in the ON position

A manual pushbutton with cord shall be provided. The cord shall have a minimum length of 3 feet (0.9 m). It shall have a 1/4 inch (6.35 mm) diameter, three circuit plug connected to one end and a manual pushbutton enclosed in a hand held enclosure at the other end. A complete cycle (push-release) of the manual pushbutton shall terminate the controller unit interval which is active except the vehicular yellow and all red clearance intervals. Cycling the push-button during the vehicular yellow or all red clearance intervals shall not terminate the timing of those intervals.

23. Cabinet Model 336S (Pole Mount)

    Ensure that this unit meets the requirements of Subsection 925.2.04.A.22 above, except that the cabinet is configured for pole mounting as specified in the General Requirements for Type 170 Cabinet Assemblies.

24. Cabinet Model 336S (Base Mount with Auxiliary Output File)

    Ensure that this unit meets the requirements of Subsection 925.2.04.A.22 above, except that the cabinet is configured with an Auxiliary Output File. Additionally, the field wiring terminals may be mounted on the rear of the input file.

25. Cabinet Model 337

    The Model 337 cabinet is a compact cabinet with an output capacity of four vehicle phases plus two pedestrian phases; the dimensions not to exceed 17 inches (425 mm) deep x 20 inches (500 mm) wide x 35 inches (875 mm) high and its shipping weight not to exceed 175 pounds (80 kg).

    Supply the cabinet assembly with capacity for 11, two-channel slots in the input file.

    Ensure that the pin assignments of the C1 connector are compatible with the 2070 controller as applicable according to the required number of input/outputs.

    Ensure that the 337 cabinet uses standard Type 170 input and output file units.

    Equip the cabinet with a C2 connector harness with field terminals protected with surge protectors for communication inputs as specified under communications inputs.

    Ensure that the cabinet has two full-size doors to allow complete access from the front or back of the cabinet. Design the rack assembly to mount in CALTRANS standard rails to allow for a Model 204 flasher.

    Provide a receptacle to accept the plug in power distribution assembly card guides and edge connectors for the input file card guides to support the conflict monitor, and load switches and flash transfer relays.

    Due to the compact design of this cabinet assembly, the Department of Transportation may accept a non-standard type of power distribution assembly (PDA).

26. Cabinet Model 334 with Auxiliary Output File for Ramp Metering Operations

    The Controller Cabinet shall comply with the CALTRANS Traffic Signal Equipment Specifications (1989), Model 334 Cabinet Specifications (Chapter 6). **DO NOT** use the February 1993 Amendments for Specifications for the Model 334C Cabinet. Do use the Specification Clarifications dated December 20, 1993.

    Provide Cabinet configured as shown in Figure 925-1.

    Provide Detector Test Switch Panel. Before providing cabinet submit Detector Switch Test panel design and mounting location for approval. Panel shall include one switch for each of the 13 detector inputs.

    a. The Detector Test Switch Panel shall be mounted in the cabinet on the rails. The panel shall be fabricated from brushed aluminum.

    b. Each switch will be labelled as to function. The label shall be silkcreened on the test panel and be at least ¼ inch in height.

    c. A three position switch shall be provided for each detector input. The switch shall function as follows:

       - Down (Momentary) – Call is placed into the controller on the appropriate input in parallel with field input
       - Up (Lock) – Call is placed into the controller on the appropriate input in parallel with field input.
       - Center (Lock) – Normal Operation field output of detector is connected to the controller unit.

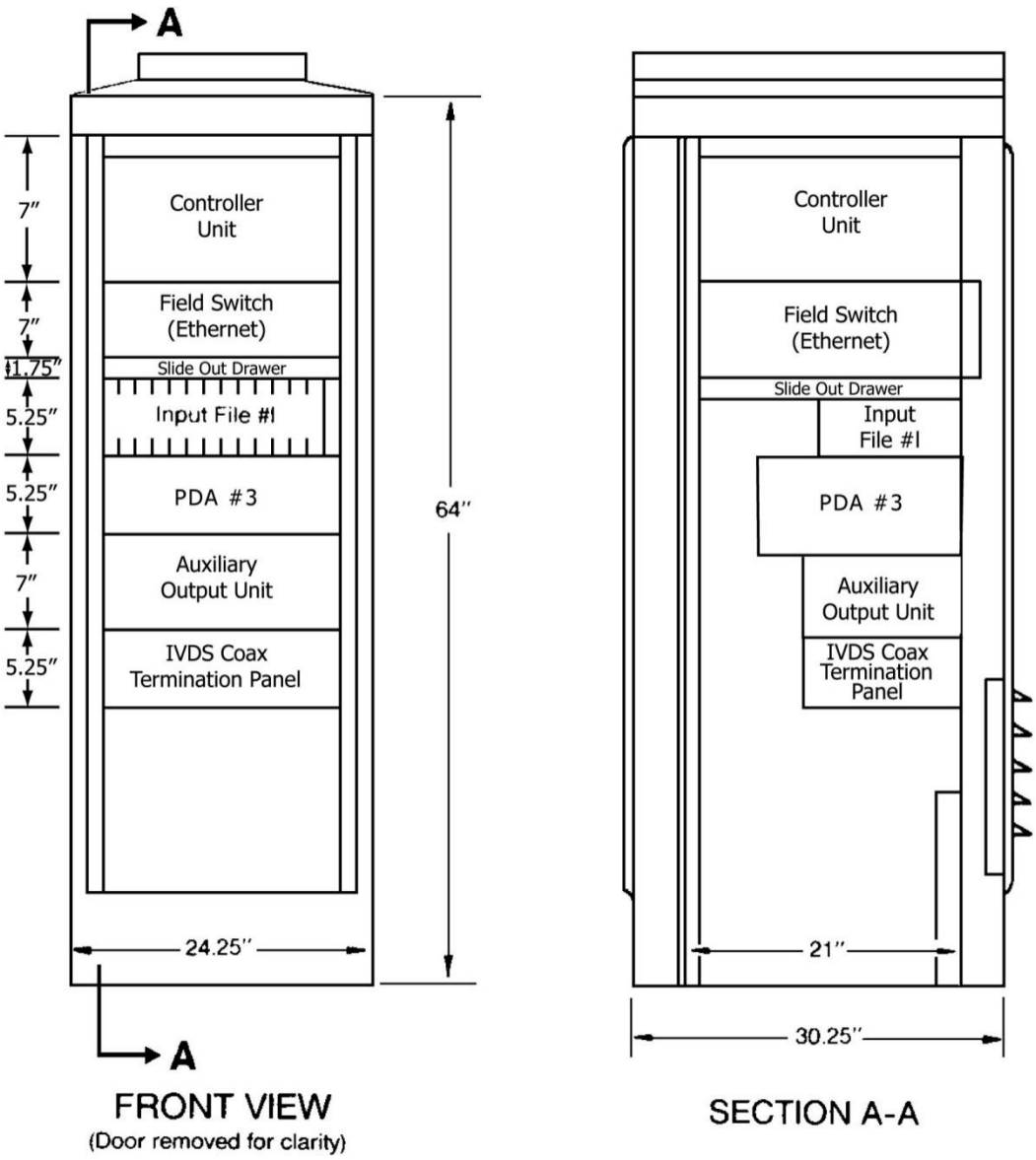

Figure 925-1 Typical 334 Cabinet Configuration

B. Fabrication

Refer to Subsection 925.2.07.A.1for controller cabinet minimum fabrication Specifications.

C. Acceptance

Refer to Subsection 925.2.02 for compliance with CALTRANS QPL.

D. Materials Warranty

Refer Subsection 925.2.01.D for Materials Warranties.

Table 925 – 4 Model 332 Default Input Files Assignment Detail

Upper Input File (I)	**Slot**		**1**	**2**	**3**	**4**	**5**	**6**	**7**	**8**	**9**	**10**	**11**	**12**	**13**	**14**
	Type		**Det**	**Det**	**Det**	**Det**	**Det**	**Det**	**Det**	**Det**	**Det**			**DC**	**DC**	**DC**
	Channel 1	**C1 Pin**	56	39	63	47	58	41	65	49	60		80	67	68	81
		Function	Ph1	Ph2	Ph2	Ph2 CALL	Ph3	Ph4	Ph4	Ph4 CALL	Ph1		INT ADV	Ph2 PED	Ph6 PED	FLASH
		Field Term	TB-2 1,2	TB-2 5,6	TB-2 9,10	TB-4 1,2	TB-4 5,6	TB-4 9,10	TB-6 1,2	TB-6 5,6	TB- 6 9,10		NC	TB- 8 4,6	TB- 8 7,9	NC
	Channel 2	**C1 Pin**	56	43	76	47	58	45	78	49	62		53	69	70	82
		Function	Ph1	Ph2	Ph2	Ph2 CALL	Ph3	Ph4	Ph4	Ph4 CALL	Ph3		MCE	Ph4 PED	Ph8 PED	STOP TIME
		Field Term	TB-2 3,4	TB-2 7,8	TB-2 11,12	TB-4 3,4	TB-4 7,8	TB-4 11,12	TB-6 3,4	TB-6 7,8	TB-6 11,12		NC	TB-8 5,6	TB-8 8,9	NC
Lower Input File (J)	**Slot**		**1**	**2**	**3**	**4**	**5**	**6**	**7**	**8**	**9**	**10**	**11**	**12**	**13**	**14**
	Type		**Det**	**Det**	**Det**	**Det**	**Det**	**Det**	**Det**	**Det**	**Det**			**TBA**	**TBA**	**DC**
	Channel 1	**C1 Pin**	55	40	64	48	57	42	66	50	59		54	71	72	51
		Function	Ph5	Ph6	Ph6	Ph6 CALL	Ph7	Ph8	Ph8	Ph8 CALL	Ph5			EVA	EVB	R/R
		Field Term	TB-3 1,2	TB-3 5,6	TB-3 9,10	TB-5 1,2	TB-5 5,6	TB-5 9,10	TB-7 1,2	TB-7 5,6	TB- 7 9,10			TB- 9 4,6	TB- 9 7,9	TB- 9 10,12
	Channel 2	**C1 Pin**	55	44	77	48	57	46	79	50	61		75	73	74	52
		Function	Ph5	Ph6	Ph6	Ph6 CALL	Ph7	Ph8	Ph8	Ph8 CALL	Ph7			EVC	EVD	
		Field Term	TB-3 3,4	TB-3 7,8	TB-3 11,12	TB-5 3,4	TB-5 7,8	TB-5 11,12	TB-7 3,4	TB-7 7,8	TB-7 11,12			TB-9 5,6	TB-9 8,9	TB- 9 11,12

Table 925-5 Required Surge Arrestors for Model 332 Cabinet		
Field Terminal Block	**Terminals**	**Required Arrestor**
TB-8	1-12	Section 925.2.04.A.13.f
TB-9	10-12	Section 925.2.04.A.13.f
TB-9	4-9	Terminal Block only Section 925.2.04.A.13.f
TB-2, TB-3, TB-4, TB-5, TB-6, TB-7	1-12	Section 925.2.04.A.13.c

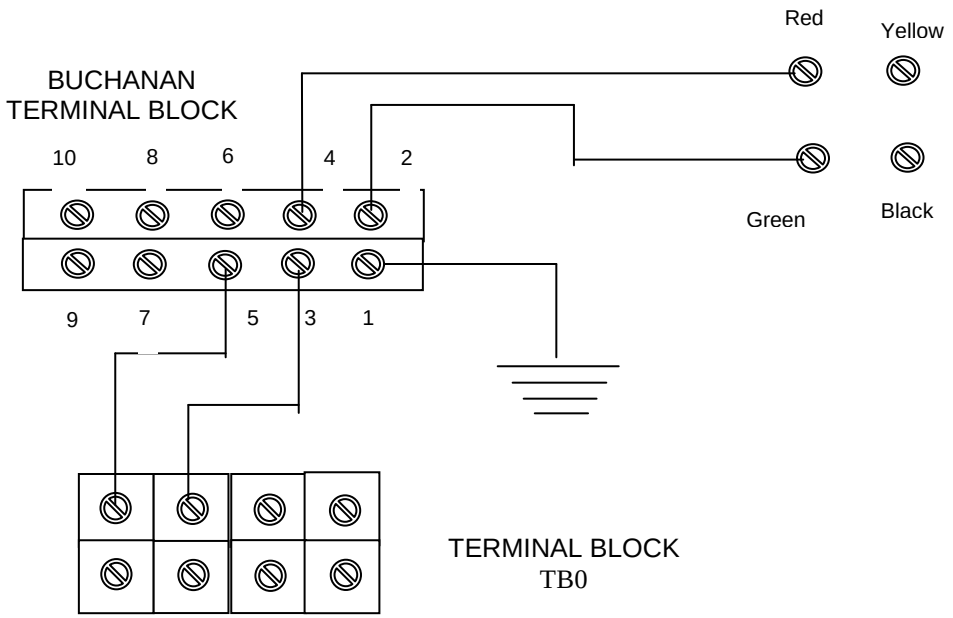

Note: For a typical signal installation, the Model 332 cabinet is the design standard.

Figure 925-2—Wiring Diagram for Dial-up Communications

Table 925-6 Model 336S Default Input File Assignment Detail

Slot		1	2	3	4	5	6	7	8	9	10	11	12	13	14
Type		**Det**	**Det**	**Det**	**Det**	**Det**	**Det**	**Det**	**Det**	**DC**	**TBA**	**TBA**	**DC**	**DC**	**DC**
Channel 1	**C1 Pin**	56	39	58	41	55	40	57	42	51	71	72	67	68	81
	Function	Ph1	Ph2	Ph3	Ph4	Ph5	Ph6	Ph7	Ph8	SE1	EVA	EVB	Ph2 PED	Ph6 PED	FLASH
	Field Term	TB-7 1,2	TB-7 5,6	TB-7 9,10	TB-8 1,2	TB-8 5,6	TB-8 9,10	TB-9 1,2	TB-9 5,6	TB- 5 1,2	TB- 5 5,6	TB- 5 9,10	TB- 4 1,2	TB- 4 5,6	NC
Channel 2	**C1 Pin**	47	43	49	45	48	44	50	46	52	73	74	69	70	82
	Function	Ph2 CALL	Ph2	Ph4 CALL	Ph4	Ph6 CALL	Ph6	Ph8 CALL	Ph8	R/R	EVC	EVD	Ph4 PED	Ph8 PED	STOP TIME
	Field Term	TB-7 3,4	TB-7 7,8	TB-7 11,12	TB-8 3,4	TB-8 7,8	TB-8 11,12	TB-9 3,4	TB-9 7,8	TB-5 3,4	TB-5 7,8	TB-5 11,12	TB-4 3,4	TB-4 7,8	NC

Table 925-7 Required Surge Arrestors for Model 336S Cabinet

Field Terminal Block	Terminals	Required Arrestor
TB-4	1-12	Section 925.2.04.A.13.f
TB-5	1-4	Section 925.2.04.A.13.f
TB-5	5-12	Terminal Block only Section 925.2.04.A.13.f
TB-7, TB-8, TB-9	1-12	Section 925.2.04.A.13.c

Table 925-8 Model 334 Default Input File Assignment Detail

Slot		1	2	3	4	5	6	7	8	9	10	11	12	13	14
Type		**Det**	**Det**	**Det**	**Det**	**Det**	**Det**	**Det**	**Det**	**Det**	**Det**	**Det**	**TBA**	**TBA**	**TBA**
Channel 1	**C1 Pin**	46	50	49	55	51	57	59	61	81	79	53	41	43	45
	Function	L1 D1	L2 D2	L1 Q1	L3 Q3	L1 MLA	L2 MLA	L3 MLA	L4 MLA		L3 D3				
	Field Term	TB-2 1,2	TB-2 5,6	TB-2 9,10	TB-3 1,2	TB-3 5,6	TB-3 9,10	TB-4 1,2	TB-4 5,6	TB-4 9,10	TB-5 1,2	TB-5 5,6	TB-5 9,10	TB-6 1,2	TB-6 5,6
Channel 2	**C1 Pin**	39	47	48	56	52	58	60	62	80	82	54	40	42	44
	Function	L1 P1	L2 P2	L2 Q2		L1 MLB	L2 MLB	L3 MLB	L4 MLB		L3 P3				
	Field Term	TB-2 3,4	TB-2 7,8	TB-2 11,12	TB-3 3,4	TB-3 7,8	TB-3 11,12	TB-4 3,4	TB-4 7,8	TB-4 11,12	TB-5 3,4	TB-5 7,8	TB-5 11,12	TB-6 3,4	TB-6 7,8

Table 925-9 Required Surge Arrestors for Model 334 Cabinet

Field Terminal Block	Terminals	Required Arrestor
TB-2, TB-3, TB-4	1-12	Section 925.2.04.A.13.c
TB-5	1-4	Section 925.2.04.A.13.c

Table 925 - 10 Model 334 PDA Type 3 Output File

	SP 1					SP 2					SP 3				
	C1 Pin	Out #	Conn	Func	Field Term	C1 Pin	Out #	Conn	Func	Field Term	C1 Pin	Out #	Conn	Func	Field Term
SP R	2	0	C6-1	Warn 1	T4-7	4	2	C6-3	Lane 1 R	T4-4	7	5	C6-6	Lane 2 R	T4-1
SP Y	37	34	C6-9		T4-8	5	3	C6-4	Lane 1 Y	T4-5	8	6	C6-7	Lane 2 Y	T4-2
SP G	3	1	C6-2	Warn 2	T4-9	6	4	C6-5	Lane 1 G	T4-6	9	7	C6-8	Lane 2 G	T4-3

Table 925 - 11 Model 334 Auxiliary Output File

	SP 9					SP 10					SP 11				
	C1 Pin	Out #	Conn	Func	Field Term	C1 Pin	Out #	Conn	Func	Field Term	C1 Pin	Out #	Conn	Func	Field Term
SP R	97	53	C5-14	Lane 3 R	A124	94	50	C5-11	Not used	A121	91	48	C5-9	Not used	A114
SP Y	98	54	C5-15	Lane 3 Y	A125	95	51	C5-12	Not used	A122	101	37	C5-18	Not used	A115
SP G	99	55	C5-16	Lane 3 G	A126	96	52	C5-13	Not used	A123	93	49	C5-10	Not used	A116
	SP 12					SP 13					SP 14				
	C1 Pin	Out #	Conn	Func	Field Term	C1 Pin	Out #	Conn	Func	Field Term	C1 Pin	Out #	Conn	Func	Field Term
SP R	88	45	C5-6	Not used	A111	85	42	C5-3	Not used	A104	83	40	C5-1	Not used	A101
SP Y	89	46	C5-7	Not used	A112	86	43	C5-4	Not used	A105	100	36	C5-17	Not used	A102
SP G	90	47	C5-8	Not used	A113	87	44	C5-5	Not used	A106	84	41	C5-2	Not used	A103

925.2.05 Type ITS Cabinet Assemblies

A. Requirements

Ensure that the cabinet assembly meets the requirements of the CALTRANS Specifications as described in this document. In addition to the CALTRANS Specifications, ensure that the cabinet assembly conforms to the requirements listed below, which take precedence over conflicting CALTRANS Specifications.

1. Cabinet configuration:

   Supply cabinets in accordance with the following information and table 925-12.

   a. Cabinet Traffic Signal Application - Series 340
      - 340 - 4 Door Cabinet with “P” Base Ground Mount
      - 342 - 2 Door Cabinet with “170” Base (332) Ground Mount
      - 346 - 2 Door Cabinet with ”170” Base (336S), Adaptor Mount

   b. Cabinet Traffic Management Application - Series 350
      - 354 - 2 Door Cabinet with “170” Base (332) Ground Mount
      - 356 - 2 Door Cabinet with “170” Base (336S) Adaptor Mount

Table 925-12 ITS Cabinet Configurations

Items	ITS Cabinet Versions				
	340	342	346	354	356
	Qty	Qty	Qty	Qty	Qty
Housing # 1/ Cage #1		1		1	
Housing # 2/Cage #2			1		1
Housing #3/Two Cage #1	1				
“J” Panel Cage #1	4	2		2	
“J” Panel Cage #2			2		2
Service Panel Assembly with AC -/EG Bus	1	1	1	1	1
Raw/Clean AC power Assembly	1	1	1	1	1
Raw Clean AC power Extension	1				
AC Clean Module Assembly	1				
DC Power/Comm Assembly	2	1	1	1	1
DC Power/Comm Extension	2	1		1	1
Cabinet Shelf Assembly	2	1	1	1	1
Input Assembly	3	2	1	1	1
Six Pack Output Assembly	1			1	1
Fourteen Pack output Assembly	1	1	1		
PDA ITS Assembly	1	1	1	1	1
Control/Serial Bus harness	8	6	4	4	4
Serial Bus 3 Harness	3	1	1	1	1

NOTE: Input Assembly shall include a Model 218 SIU. Output Assembly shall include a Model 218 SIU, Model 214 AMU and Model 205 Transfer Relays. The PDA ITS (Traffic Signal Application) shall include two Model 204 Flasher Units, Model 212 CMU and two Model 216 Power Supply Units and attached harnesses. The PDA ITS (Traffic Management System Application) shall include Model 212 CMU and two Model 216 Power Supply Units and attached harnesses.

   c. Model 340 Cabinet:
      - Field termination panels

- 9 – Flash Transfer Relays
- 2 – Model 204 Flashers
- Specific Equipment Layout and other cabinet devices determined on a project specific basis

d. Model 342 Cabinet:

- 1-Model 242 DC Isolator
- 6- Flash Transfer Relays
- 2-Model 204 Flashers

e. Model 346 Cabinet

- 1-Model 242 DC Isolator
- 6-Flash Transfer Relays
- 2-Model 204 Flasher
- 1-"M" Base Adapter installed (Base Mount Cabinets Only)
- 1-Aluminum Cover Plate for Cabinet Bottom (Pole Mount Cabinets Only)
- Model 354 Cabinet:
- Specific Equipment Layout and additional cabinet equipment determined on a project specific basis.
- Model 356 Cabinet
- Specific Equipment Layout and additional cabinet equipment determined on a project specific basis.
- 1-"M" Base Adapter installed (Base Mount Cabinets Only)
- 1-Aluminum Cover Plate for Cabinet Bottom (Pole Mount Cabinets Only)

Note: Include above components in cabinet at time of delivery.

Other auxiliary cabinet components such as controllers, load switches, etc. will be ordered as separate items.

2. Finish

Use cabinets that have a bare aluminum finish (see Subsection 925.2.07.A.1 for controller-cabinet minimum fabrication specifications).

3. Locks

Equip the main cabinet door with locks that accept No. 2 Corbin keys. Provide two sets of keys with each cabinet. One set of keys is defined as one – No. 2 key and one - police panel key.

4. Power

Equip the cabinet assemblies with an ITS power distribution assembly to generate AC and DC power for the electronic components, except the DC power for the controller units.

5. Mounting

Equip the cabinets for pole or base mounting, as specified in the Plans.

a. Base Mount

Supply Model 346 and 356 cabinets, when specified as base mount, with a “M” base-mounting adapter installed.

b. Pole Mount

Supply Model 346 and 356 cabinets, when specified as pole mount, with two exterior pole mounting brackets that allow for mounting on steel, concrete, and timber poles.

Ensure that the bracket mounting holes are properly reinforced with metal plates of adequate size and strength, welded longitudinally across the inside depth of the cabinet.

Ensure that the exterior-mounting bracket is shipped installed on the cabinet housing. Additionally, provide an aluminum plate, which covers the bottom cabinet opening.

6. Cabinet Light

Include in each cabinet one fluorescent strip lighting fixture mounted inside the top front portion of the cabinet. Do not use a screw in type fluorescent lamp.

The fixture includes a cool white lamp, covered, and operated by a normal power factor, UL listed ballast.

Install a door-actuated switch to turn on the cabinet light when either door is opened.

7. Cabinet Interlock

   Do not install the interlock circuit, as detailed in the CALTRANS Specifications.

8. Cabinet Drawer

   Equip each Model 340, 342, 346, 352 and 356 cabinet with an aluminum storage compartment mounted in the rack assembly with the approximate following dimensions: 16 inches (400 mm) wide, 14 inches (350 mm) long, and 1.75 inches (44 mm) deep.

   Mount this compartment directly under the Type 2070 controller. Provide a drawer with telescoping drawer guides to allow full extension from the rack assembly.

   When extended, the storage compartment opens to provide storage space for cabinet documentation and other miscellaneous items.

   Ensure that the storage compartment be of adequate construction to support a weight of 25 pounds (12 kg) when extended.

   Provide a top for the storage compartment that has a non-slip plastic laminate attached, which covers a minimum of 90% of the surface area of the top.

9. Test Program

   Supply each cabinet with a diagnostic test program, which verifies the operation of the cabinet. Ensure that the program can test cabinet wiring related to the output file, input file, and police panel and flash switches. In addition, ensure that the program can check the operation of the SIU, AMU and CMU by generating all possible conflicts, in sequence.

10. Surge Protection

    Equip each cabinet with devices to protect the control equipment from surges and over voltages.

    Design the surge protector panels to allow for adequate space for a wire connection and surge protector replacement without the removal of terminal blocks or panels. Provide surge protectors for the input sections as detailed below and as shown in the Input Terminal and Surge Arrestor Detail.

    Supply surge protectors that meet the following Specifications.

    a. AC Service Input

       - Include a surge protection unit for each cabinet on the AC service input that meets or exceeds the following requirements:
           - Provide a hybrid type power line surge protection device on a service panel which plugs into a 12 pin Beau Connector which mounts on a service panel.
       - Install the protector between the applied line voltage and earth ground. Use a surge protector capable of reducing the effect of lightning transient voltages applied to the AC line that conforms to the following:
           - Peak surge current for an 8 x 20 μs waveform:
           - 20,000A for 20 occurrences
           - Clamp voltage @ 20,000A
           - 280V max
           - Maximum continuous operating current:
           - @ 120V / 60 Hz 10A
           - Series Inductance:
           - AC Line/AC Neutral - 200 microhenries
           - Response time:
           - Voltage never exceeds 280V during surge
           - Spike suppression for +/- 700 V spike:
           - +/- 40 V deviation from sine wave at all phases angles between 0 and 180 degrees.
       - Provide a protector with the following terminals:
           - Main Line (AC line first stage terminal)

- Main Neutral (AC neutral input terminal)
- Equipment Line In (AC line second stage input terminal, 10A)
- Equipment Line Out (AC line second stage output terminal, 10A)
- Equipment neutral out (neutral terminal to protected equipment)
- GND (Earth connection)

- Supply a protector that is epoxy encapsulated in a flame-retardant material.
- Configure the Equipment Line Out to provide power to the Type 2070 and to the 24 V power supply.

b. Inductive Loop Detector Inputs

Protect each inductive loop detector channel input by an external surge protection device that meets or exceeds the following requirements:

- A three-terminal device, two (2) of which are connected across the signal inputs of the detector with the third connected to the chassis ground to protect against common mode damage.
- Instantly clamps differential mode surges (induced voltage across the loop detector input terminals) via a semiconductor array. The array appears as a low capacitance to the detector.
- Clamps common mode surges (induced voltage between the loop leads and ground) via solid state clamping devices.
- Withstand 25-100A surge current occurrences of a 10 x 700 μs waveform.
- Have the following clamp characteristics:

Maximum break over voltage:	170 V
Maximum on-stage clamping voltage:	3V
Response Time:	<5 ns
Off-stage leakage current:	<10 μA
Capacitance:	less than 220 pf

- Ensure that the unit also meets the following minimum requirements:

Peak surge current:	6 times
Differential mode:	400 A (8 x 20 ms)
Common mode:	1,000 A (8 x 20 ms)
Estimated occurrences:	500 @ 200 A
Response time:	40 ns
Input capacitance:	35 pF typical
Temperature:	-40° F to +185° F (-40º C to 85º C)
Mounting:	No. 10-32 x 3/8-inch (No. 5 x 10 mm) bolt
Clamp voltage @ 400 A diff. Mode:	30 V max.
Clamp voltage @ 1,000 A comm.. Mode:	30 V max.

c. Signal Load Switches (Switchpacks)

Provide the output of the switchpack in the output file with transient protection via the nine position transient protection device in the output file. Protect switchpacks from surges on the AC output lines.

Ensure that the transient protectors meet or exceed these requirements:

- Steady state sinusoidal voltage (RMS) rating at 50 to 60 Hz of at least 150 V at 77 ºF (25 °C)
- Steady state applied DC voltage rating of at least 200 V at 77 ºF (25 °C)
- Transient energy rating is of at least 80 J for a single impulse of 10/1,000 μs current waveform at 77 ºF (25 °C)
- Peak current rating of 6,500 A for a single impulse of 8/20 μs waveform with the rated continuous voltage applied
- Varistor voltage of at least 212 V at 1.0mA of DC current applied for the duration of 20 μs to 5s

- Clamping voltage of at least 395 V with an applied 8/20 μs impulse of 100 A
- Typical capacitance at a frequency of 0.1 to 1.0 MHz of 1600 pF
- Two-terminal device, one of which is connected to the AC output of the signal load switch on the output file terminals (backside of the field terminals) with the other connected to AC neutral

d. Communication Inputs

Protect low voltage communications input as it enters the cabinet with a solid-state surge protection unit that meets or exceeds these requirements:

- Dual pair (4-wire) module with a printed circuit board connector, double sided and gold plated for reliability
- Ability to mate with and be installed in a 10-circuit Buchanan connector Part Number PCBIB10S or Tyco Part Number 2-1437410-3 or equivalent
- Usable as two independent signal pairs
- The data circuits pass through the protection in a serial fashion
- C2 connector of the 2070 controller that terminates on the line side of the unit
- Communication field wires for this local side that terminate on the line side of the unit
- Ground terminals connected to power ground
- Ensure that the unit meets the following minimum requirements:

Peak surge current:	10 kA (8 x 20 μs wave shape)
	500A (10 x 700 μs wave shape)
Occurrences @ peak:	50 typical
Response time:	<1ns
Voltage Clamp:	8V line to line
Series Resistance:	24 Ω total
Temperature	-40 ^{o}F (-40 ^{o}C) to +185 ^{o}F (85 ^{o}F)
Primary protector:	3 element gas tube 5kA, (8 x 20μs wave shape), per side
Secondary protector:	Silicon avalance, 1.5 kW minimum

e. Low Voltage DC Inputs

Provide an external surge protection device for each low voltage DC input channel which meets the same requirements as the communication inputs with the following exception of the Voltage clamp, which shall be 30 V line-to-line.

11. Type 212 ITS Cabinet Monitor Unit

a. Introduction

Supply each cabinet with Type 212 ITS Cabinet Monitor Unit (CMU). Ensure the Type 212 CMU meets the CALTRANS TEES Specifications and functions as a unit with the a Type 214 Auxiliary Monitor Unit to provide the following monitoring functions: Cabinet Power Supplies,; Conflicting Channel Monitor, Serial Bus1 and 3 Error; Message 62; Diagnostic Error; Multiple Channel Inputs; Lack of Signal Inputs; Yellow Clearance; Yellow plus Red Clearance; Police and Power Distribution Switch Monitor; door Switches and Main Contactor Status; Circuit Breakers; Flash Unit Output Status; and AC Line Level Sense. Ensure the Unit supplied is listed on the most recent California Department of Transportation Qualified Products List (QPL).

b. Configuration

Supply Type 212 CMU capable of monitoring up to 28 physical load switch channels (RYG) plus 4 virtual channels for a total of 32 channels.

c. Programming

Ensure complete programming of the Type 212 CMU is by an interchangeable Datakey nonvolatile memory device. The Datakey shall store all of the configuration parameters. Ensure the programming of the datakey can easily be accomplished by a PC and provide datakey and programming device with the delivery of the first unit

ordered. Orders of multiple ITS cabinets require delivery or 1 programming device with PC software for every 10 cabinets.

d. Logging

Ensure the Type 212 CMU maintains a non-volatile event log recording. The complete intersection status as well as previous fault events, AC Line events, configuration changes, monitor resets, cabinet temperature and true RMS voltages for all field inputs. A real time clock time shall stamp each log event with the time and date.

Ensure a Signal Sequence History Log is stored in nonvolatile memory. The information stored in the signal sequence log shall provide graphic displays of up to 30 seconds of signal status prior to the fault trigger event with 50 ms resolution.

The Type 212 CMU shall be provided with PC Software that allows a review of status, event log review and archival.

12. Type 214 ITS Auxiliary Monitor Unit

a. Introduction

Supply each ITS cabinet output assembly with a Type 214 ITS Auxiliary Monitor Unit (AMU). Ensure the Type 214 CMU meets the CALTRANS TEES Specifications and functions with the a Type 212 Cabinet Monitor Unit to provide cabinet monitoring functions to perform the following monitoring functions: Cabinet Power Supplies, Conflicting Channel Monitor, Serial Bus 1 and 3 Error; Message 62; Diagnostic Error; Multiple Channel Inputs; Lack of Signal Inputs; Yellow Clearance; Yellow plus Red Clearance; Police and Power Distribution Switch Monitor; door Switches and Main Contactor Status; Circuit Breakers; Flash Unit Output Status; and AC Line Level Sense. Ensure the Unit supplied is listed on the most recent California Department of Transportation Qualified Products List (QPL). The Type 214 AMU shall provide the field signal sensing.

b. Current Monitoring

Supply Type 214 AMU capable of operating in a 14 channel mode or a 6 channel mode. Ensure the address select is correct for the output assembly in which the Model 214 AMU is installed.

c. Diagnostics

Ensure the Type 214 AMU has self diagnostic tests that execute continuously to provide for correct operation to properly monitor the current for use with LED signal heads.

13. Type 218 ITS Serial Interface Unit

a. Introduction

Supply each input and output assembly with a Type 218 ITS Serial Interface Unit (SIU). Ensure the Type 218 ITS SIU supplied meets the CALTRANS TEES Specifications. Ensure the Unit supplied is listed on the most recent California Department of Transportation Qualified Products List (QPL). The Type 218 ITS SIU shall provide the interface between the 2070 controller and the input and output files.

b. Configuration

Supply Type 218 SIU capable of operating in all input and output modes. Provide a Model 218 SIU that is configured correctly for the input or output file for which it is supplied.

c. Programming

Ensure programming of the Type 218 SIU is programmed by assembly mounted address jumpers and that no other setup is required.

d. Diagnostics

Ensure the Type 218 SIU supplied has a complete set of internal diagnostics self-tests run continuously to monitor critical components of the unit. Provide unit with a front panel LED indicator that can be used to report the current Input/Output assembly address assignment of the unit for cabinet configuration verification. Ensure unite has a diagnostic EIA-232 port on the front panel to interface with the SIU 218 functions.

14. Model 242 DC Isolator

Provide Model 242 DC Isolators that are in accordance with the latest version of CALTRANS Specifications as referenced earlier in this section. Provide isolators that:

- Allow 242 isolator input signal polarity to easily be inverted without the use of tools. Acceptable methods are removable jumpers or dip switches. Unacceptable methods are soldering or desoldering a diode or resistor.
- Output is OFF for input voltages greater than 12 volts;
- Output is ON for voltages of less than 8 volts that have a duration of at least 5 to 25 ms (optional 2-7 ms);
- Minimum output pulse width is 100 ms with a valid input (can be disabled);
- Output is optically isolated open collector NPN transistor;
- Capable of sinking 50 ma when on;
- Can register a new input within 25 ms of the old signal going away; and
- Output clamped on power up and down

15. Model 200 Switchpack

    Provide Model 200 Switchpacks that are in accordance with the latest version of CALTRANS Specifications as referenced earlier in this section.

16. Model 204 Flasher Unit

    Provide Model 204 Flasher Units that are in accordance with the latest version of CALTRANS Specifications as referenced earlier in this section.

17. Flash Transfer Relay

    Provide Flash Transfer Relays that are in accordance with the latest version of CALTRANS Specifications as referenced earlier in this section.

18. Cabinet Model 342

    Provide Cabinet Model 342 that meets the CALTRANS Specification with the addition of surge protection as detailed in Table 925-13 Model 342 ITS Cabinet Default Input Files Assignment Detail, Table 925-14 Required Surge Arrestors for Model 342 ITS Cabinet, and Table 925-15 Model 342 & 346 ITS Cabinet Default Output File Assignment Detail.

    Supply Model 342 with lower input panel cabinets, with housing Type 1, and all components as described in these Specifications.

    Supply cabinets having two input files which conform to the CALTRANS Specifications and configured to accept two 2070 controllers in the top portion of the cabinet.

    Configure the cabinet for dial up communications. Mount a two (2) circuit Buchanan connector on the right side panel (from rear door).

    Mount a phone jack with a RJ11 connector above or to the right of the Buchanan terminal block.

    Wire the phone jack to the Buchanan and to the Terminal Block (TB0) in accordance with Figure 925-3.

19. Cabinet Model 346 (Base Mount)

    This unit meets the CALTRANS Specification with the addition of approximately 6 additional inches (150 mm) of cabinet height exclusive of the "M" base adapter. Configure the internal component layout so that the additional space is available in the bottom area of the cabinet cage. Ensure that the field wiring input panels and surge protection conform to Table 925-16 Model 346 ITS Cabinet Default Input File Assignment Detail, Table 925-17 Required Surge Arrestors for Model 346 Cabinet, and Table 925-15 Model 342 & 346 Default ITS Cabinet Default Output File Assignment.

20. Cabinet Model 346 (Pole Mount)

    Ensure that this unit meets the requirements of Subsection 925.2.04.A.19 above, except that the cabinet is configured for pole mounting as specified in the General Requirements for Type ITS Cabinet Assemblies.

21. Cabinet Model 340

    The Model 340 cabinet configuration will be determined by the special provisions of the project.

    Ensure that the input and output port assignments are compatible with the 2070 controller as applicable according to the required number of input/outputs. Ensure that the 340 cabinet uses standard ITS cabinet input and output file units.

Equip the cabinet with a C2 connector harness with field terminals protected with surge protectors for communication inputs as specified under communications inputs.

Ensure that the cabinet has four full-size doors to allow complete access from the front or back of the cabinet. Design the rack assembly to mount in CALTRANS standard rails to allow for a Model 204 flasher.

Provide a receptacle to accept the plug in power distribution assembly card guides and edge connectors for the input file card guides to support the conflict monitor, and load switches and flash transfer relays.

B. Fabrication

Refer to Subsection 925.2.07.A.1 for controller cabinet minimum fabrication Specifications.

C. Acceptance

Refer to Subsection 925.2.02 for compliance with CALTRANS QPL.

D. Materials Warranty

Refer Subsection 925.2.01.D for Materials Warranties.

Table 925 – 13 Model 342 ITS Cabinet Default Input Files Assignment Detail

Input File	Chan	Item	File Slot 1	2	3	4	5	6	7	8	9	10	11	12
1	Upper	SIU Pin	A5	A6	A7	A8	A9	A10	A11	A12	A13	A14	A15	A16
		SIU Byte,Bit	2,6	3,0	3.2	3,4	3,6	4,0	4,2	4,4	4,6	5,0	5,2	5,4
		SIU Input #	7	9	11	13	15	17	19	21	23	25	27	29
		2070 Input #	17	0	28	8	22	6	43	25	51	32	12	38
		2070 Port	3.2	1.1	4.5	2.1	3.7	1.7	6.4	4.2	7.4	5.1	2.5	5.7
		Function	Ph 1 Det	Ph 2 Det	Ph 2 Det	Ph 2 Det	Ph 3 Det	Ph 4 Det	Ph 4 Det	Sp Det 1	Sp Det 5	Pd 2 Det	Pre 1	Pre 5
		Field Term	TB-2 1,2	TB-2 5,6	TB-2 9,10	TB-4 1,2	TB-4 5,6	TB-4 9,10	TB-6 1,2	TB-6 5,6	TB-6 9,10	TB-8 4,6	TB-9 10,12	TB-9 5,6
	Lower	SIU Pin	B5	B6	B7	B8	B9	B10	B11	B12	B13	B14	B15	B16
		SIU Byte,Bit	2,7	3,1	3,3	3,5	3,7	4.1	4,3	4,5	4,7	5,1	5,3	5,5
		SIU Input #	8	10	12	14	16	18	20	22	24	26	28	30
		2070 Input #	21	4	41	19	2	30	10	53	52	34	13	39
		2070 Port	3.6	1.5	6.2	3.4	1.3	4.7	2.3	7.6	7.5	5.3	2.6	5.8
		Function	Ph 1 Det	Ph 2 Det	Ph 2 Det	Ph 3 Det	Ph 4 Det	Ph 4 Det	Ph 4 Det	Sp Det 2	Sp Det 6	Pd 4 Det	Pre 2	Pre 6
		Field Term	TB-2 3,4	TB-2 7,8	TB-2 11,12	TB-4 3,4	TB-4 7,8	TB-4 11,12	TB-6 3,4	TB-6 3,4	TB-6 11,12	TB-8 5,6	TB-9 11,12	TB-9 8,9
	Opto Inputs	SIU Pin	B25	A26	B26	A27								
		SIU Byte,Bit	8,7	9,0	9,1	9,2								
		SIU Input #	Opto In 1	Opto In 2	Opto In 3	Opto In 4								
		2070 Input #	46	14	47	45								
		2070 Port	6.7	2.7	6.6	6.8								
		Function	Flsh Sen	MCE	Int Adv	S T								
2	Upper	SIU Pin	A5	A6	A7	A8	A9	A10	A11	A12	A13	A14	A15	A16
		SIU Byte,Bit	2,6	3,0	3.2	3,4	3,6	4,0	4,2	4,4	4,6	5,0	5,2	5,4
		SIU Input #	7	9	11	13	15	17	19	21	23	25	27	29
		2070 Input #	16	1	29	9	18	7	44	54	49	33	36	15
		2070 Port	3.1	1.2	4.6	2.2	3.3	1.8	6.5	7.7	7.2	5.2	5.5	2.8
		Function	Ph 5 Det	Ph 6 Det	Ph 6 Det	Ph 6 Det	Ph 7 Det	Ph 8 Det	Ph 8 Det	Sp Det 3	Sp Det 7	Pd 6 Det	Pre 3	Spare 1
		Field Term	TB-3 1,2	TB-3 5,6	TB-3 9,10	TB-5 1,2	TB-5 5,6	TB-5 9,10	TB-7 1,2	TB-7 5,6	TB-7 9,10	TB-8 7,9	TB-9 4,6	TB-8 1,3
	Lower	SIU Pin	B5	B6	B7	B8	B9	B10	B11	B12	B13	B14	B15	B16
		SIU Byte,Bit	2,7	3,1	3,3	3,5	3,7	4.1	4,3	4,5	4,7	5,1	5,3	5,5
		SIU Input #	8	10	12	14	16	18	20	22	24	26	28	30
		2070 Input #	20	5	42	18	3	31	11	55	50	35	37	40
		2070 Port	3.5	1.6	6.3	3.3	1.4	4.8	2.4	7.8	7.3	5.4	5.6	6.1
		Function	Ph 5 Det	Ph 6 Det	Ph 6 Det	Ph 7 Det	Ph 8 Det	Ph 8 Det	Ph 8 Det	Sp Det 4	Sp Det 8	Pd 8 Det	Pre 4	Spare 2
		Field Term	TB-3 3,4	TB-3 7,8	TB-3 11,12	TB-5 3,4	TB-5 7,8	TB-5 11,12	TB-7 3,4	TB-7 7,8	TB-7 11,12	TB-8-8,9	TB-9 7,9	TB-8 2,3
	Opto Inputs	SIU Pin	B25	A26	B26	A27								
		SIU Byte,Bit	8,7	9,0	9,1	9,2								
		SIU Input #	Opto In 1	Opto In 2	Opto In 3	Opto In 4								
		2070 Input #	NA	NA	NA	NA								
		2070 Port												
		Function												

Table 925 – 14 Required Surge Arrestors for Model 342 ITS Cabinet

Field Terminal Block	Terminals	Required Arrestors for Model 342 Cabinet
TB - 8	1-12	Section 925.2.05.A.10.f
TB - 9	10-12	Section 925.2.05.A.10.f
TB - 9	4-9	Section 925.2.05.A.10.f
TB - 2, TB - 3, TB - 4, TB - 5, TB - 6, TB - 7	1-12	Section 925.2.05.A.10.c

Table 925 - 15 Model 342 & 346 ITS Cabinet Default Output File Assignment Detail

	Switch Pack													
Item	**1**	**2**	**3**	**4**	**5**	**6**	**7**	**8**	**9**	**10**	**11**	**12**	**13**	**14**
SIU Pin	A2	B3	A5	B6	A8	B9	A11	B12	A14	B15	A17	B18	A20	B21
SIU Byte, Bit	2,0	2,3	2,6	3,1	3,4	3,7	4,2	4,5	5,0	5,3	5,6	6,1	6,4	6,7
SIU Output #	1	4	7	10	13	16	19	22	25	28	31	34	37	40
2070 Output #	13	10	8	5	2	0	29	26	24	21	18	16	53	50
2070 Output Port	2.6	2.3	2.1	1.6	1.3	1.1	4.6	4.3	4.1	3.6	3.3	3.1	7.6	7.3
AMU Pin	C16	C17	C18	C19	C20	C21	C22	C23	C24	C25	C26	C27	C28	C29
AMU Channel	1	2	3	4	5	6	7	8	9	10	11	12	13	14
Field Term	TR-1 1,2	TR-2 1,2	TR-3 1,2	TR-4 1,2	TR-5 1,2	TR-6 1,2	TR-7 1,2	TR-8 1,2	TR-9 1,2	TR-10 1,2	TR-11 1,2	TR-12 1,2	TR-13 1,2	TR-14 1,2
Function	Ph 1 Rd	Ph 2 Rd	Pd 2 DW	Ph 3 Rd	Ph 4 Rd	Pd 4 DW	Ph 5 Rd	Ph 6 Rd	Pd 6 DW	Ph 7 Rd	Ph 8 Rd	Pd 8 DW	Ov A Rd	Ov B Rd
SIU Pin	B2	A4	B5	A7	B8	A10	B11	A13	B14	A16	B17	A19	B20	A22
SIU Byte, Bit	2,1	2,4	2,7	3,2	3,5	4,0	4,3	4,6	5,1	5,4	5,7	6,2	6,5	7,0
SIU Output #	2	5	8	11	14	17	20	23	26	29	32	35	38	41
2070 Output #	14	11	32	6	3	34	30	27	33	22	19	35	54	51
2070 Output Port	2.7	2.4	5.1	1.7	1.4	5.3	4.7	4.4	5.2	3.7	3.4	5.4	7.7	7.4
AMU Pin	B16	B17	B18	B19	B20	B21	B22	B23	B24	B25	B26	B27	B28	B29
AMU Channel	1	2	3	4	5	6	7	8	9	10	11	12	13	14
Field Term	TR-1 3,4	TR-2 3,4	TR-3 3,4	TR-4 3,4	TR-5 3,4	TR-6 3,4	TR-7 3,4	TR-8 3,4	TR-9 3,4	TR-10 3,4	TR-11 3,4	TR-12 3,4	TR-13 3,4	TR-14 3,4
Function	Ph 1 Yel	Ph 2 Yel	Pd 2 PC	Ph 3 Yel	Ph 4 Yel	Pd 4 PC	Ph 5 Yel	Ph 6 Yel	Pd 6 PC	Ph 7 Yel	Ph 8 Yel	Pd 8 PC	Ov A Yel	Ov B Yel
SIU Pin	A3	B4	A6	B7	A9	B10	A12	B13	A15	B16	A18	B19	A21	B22
SIU Byte, Bit	2,2	2,5	3,0	3,3	3,6	4,1	4,4	4,7	5,2	5,5	6,0	6,3	6,6	7,1
SIU Output #	3	6	9	12	15	18	21	24	27	30	33	36	39	42
2070 Output #	15	12	9	7	4	1	31	28	25	23	20	17	55	52
2070 Output Port	2.8	2.5	2.2	1.8	1.5	1.2	4.8	4.5	4.2	3.8	3.5	3.2	7.8	7.5
AMU Pin	A16	A17	A18	A19	A20	C21	C22	C23	A24	A25	A26	A27	A28	A29
AMU Channel	1	2	3	4	5	6	7	8	9	10	11	12	13	14
Field Term	TR-1 5,6	TR-2 5,6	TR-3 5,6	TR-4 5,6	TR-5 5,6	TR-6 5,6	TR-7 5,6	TR-8 5,6	TR-9 5,6	TR-10 5,6	TR-115,6	TR-12 5,6	TR-13 5,6	TR-14 5,6
Function	Ph 1 Grn	Ph 2 Grn	Pd 2 W	Ph 3 Grn	Ph 4 Grn	Pd 4 W	Ph 5 Grn	Ph 6 Grn	Pd 6 W	Ph 7 Grn	Ph 8 Grn	Pd 8 W	O A Grn	O B Grn

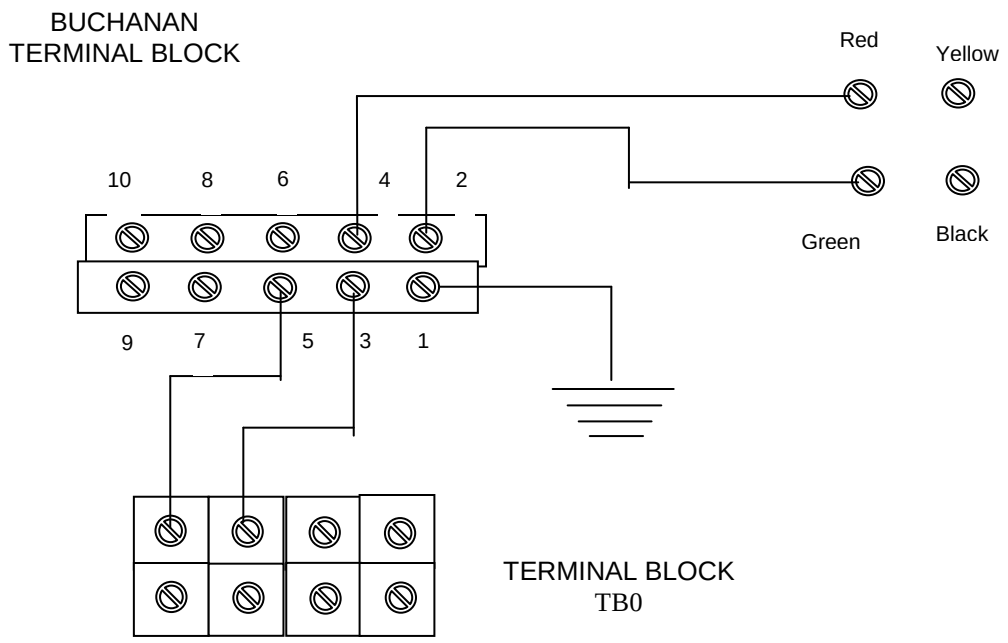

Note: For a typical signal installation, the Model 342 cabinet is the design standard.

Figure 925-3—Wiring Diagram for Dial-up Communications

Table 925 - 16 Model 346 ITS Cabinet Default Input Files Assignment Detail

Input File	Channel	Item	File Slot 1	2	3	4	5	6	7	8	9	10	11	12
1	Upper	SIU Pin	A5	A6	A7	A8	A9	A10	A11	A12	A13	A14	A15	A16
		SIU Port	2,6	3,0	3.2	3,4	3,6	4,0	4,2	4,4	4,6	5,0	5,2	5,4
		SIU In #	7	9	11	13	15	17	19	21	23	25	27	29
		2070 In #	17	0	19	2	16	1	18	3	12	36	32	33
		2070 Port	3.2	1.1	3.4	1.3	3.1	1.2	3.3	1.4	2.5	5.5	5.1	5.2
		Function	Ph 1 Det	Ph 2 Det	Ph 3 Det	Ph 4 Det	Ph 5 Det	Ph 6 Det	Ph 7 Det	Ph 8 Det	Pre 1	Pre 3	Pd 2 Det	Pd 6 Det
		Fld Term	T-7 1,2	T-7 5,6	T-7 9,10	T-8 1,2	T-8 5,6	T-8 9,10	T-9 1,2	T-9 5,6	T-5 1,2	T-5 5,6	T-4 1,2	T-4 5,6
	Lower	SIU Pin	B8	B9	B10	B11	B12	B13	B14	B15	B16	B17	B18	B19
		SIU Port	2,7	3,1	3,3	3,5	3,7	4.1	4,3	4,5	4,7	5,1	5,3	5,5
		SIU In #	8	10	12	14	16	18	20	22	24	26	28	30
		2070 In #	8	4	10	6	9	5	11	7	13	37	34	35
		2070 Port	2.1	1.5	2.3	1.7	2.2	1.6	2.4	1.8	2.6	5.6	5.3	5.4
		Function	Ph 2 Det	Ph 2 Det	Ph 4 Det	Ph 4 Det	Ph 5 Det	Ph 6 Det	Ph 7 Det	Ph 8 Det	Pre 2	Pre 4	Pd 4 Det	Pd 8 Det
		Fld Term	T-7 3,4	T-7 7,8	T-7 11,12	T-8 3,4	T-8 7,8	T-8 11,12	T-9 3,4	T-9 7,8	T-5 3,4	T-5 7,8	T-4 3,4	T-4 7,8
	Opto	SIU Pin	B25	A26	B26	A27								
		SIU Port	8,7	9,0	9,1	9,2								
		SIU In #	Opto In 1	Opto In 2	Opto In 3	Opto In 4								
		2070 In #	46	14	47	45								
		2070 Port	6.7	2.7	6.6	6.8								
		Function	Flsh Sen	MCE	Int Adv	S T								

Table 925-17 Required Surge Arrestors for Model 346 ITS Cabinet		
Field Terminal Block	**Terminals**	**Required Arrestor**
TB-4	1-12	Section 925.2.05.A.10.f
TB-5	1-4	Section 925.2.05.A.10.f
TB-5	5-12	Terminal Block Only Section 925.2.04.A.10.f
TB-7, TB-8, TB-9	1-12	Section 925.2.05.A.10.c

925.2.06 Battery Backup System

A. Requirements

This specification is for establishing the minimum requirements for a complete emergency battery backup system for use with Light Emitting Diode Traffic Signal Modules at intersections with 332 cabinets. The Battery Backup System (BBS) shall include, but not be limited to the following: Inverter/Charger, Power Transfer Relay, Batteries, a separate manually operated non-electric Bypass Switch and all necessary hardware and interconnect wiring. The BBS shall be capable of providing power for full run-time operation for an "LED –only" intersection (all colors: red, yellow, green and pedestrian heads) or flashing mode operation and intersection Red LED's. The BBS shall be designed for outdoor applications, in accordance with the CALTRANS TEES.

Figure 925-4 Battery Backup Block Diagram

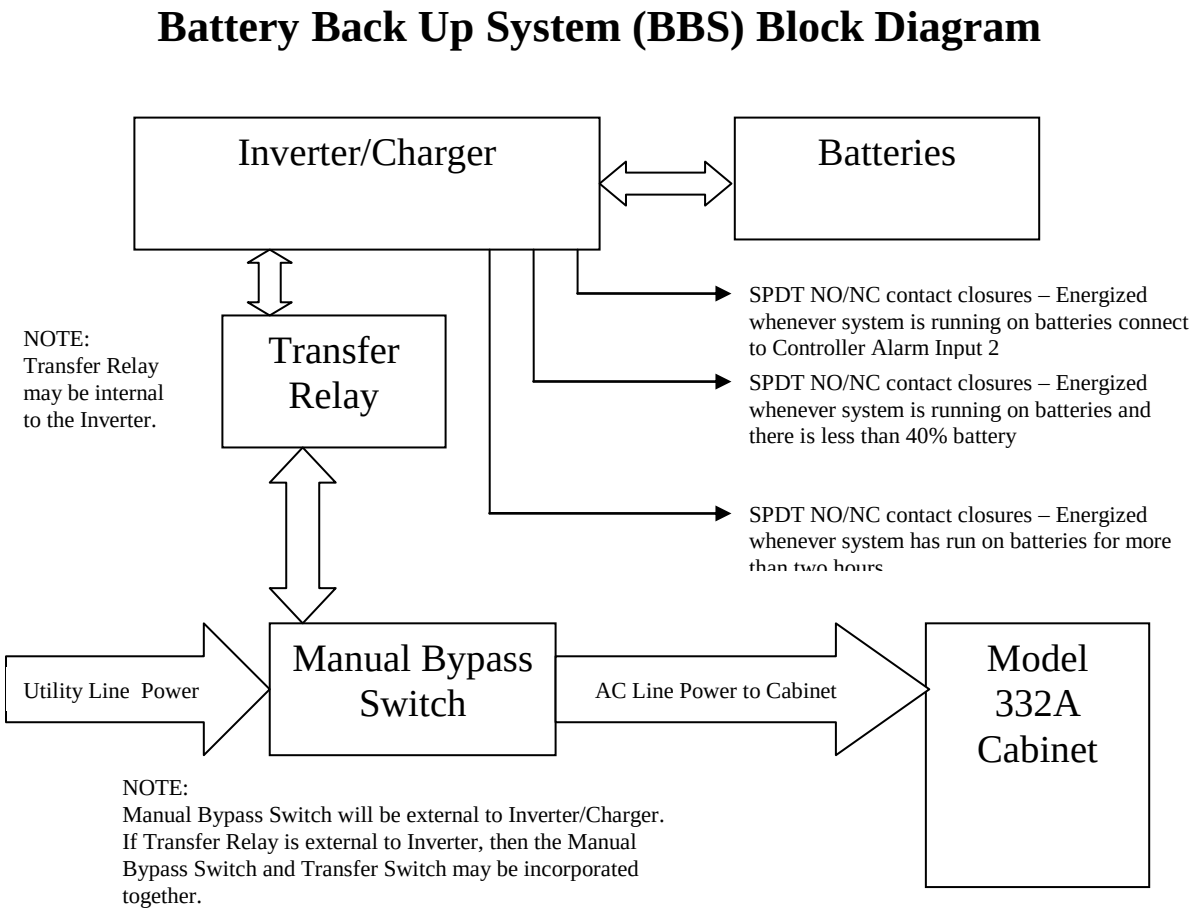

1. Operation:
   a. The BBS shall provide a minimum two (2) hours of full run-time operation for an "LED-only" intersection (minimum 700W/1000VA active output capacity, with 80% minimum inverter efficiency).
   b. The maximum transfer time allowed, from disruption of normal utility line voltage to stabilized inverter line voltage from batteries, shall be 65 milliseconds. The same maximum allowable transfer time shall also apply when switching from inverter line voltage to utility line voltage.
   c. The BBS shall include a Manual Bypass Switch which provides capability to transfer the power service to disable the BBS and operate only from the power service provided. The Manual Bypass Switch shall be as shown in Figure 925-5.

Figure 925 – 5 Manual Bypass Switch (Shown in normal BBS Mode)

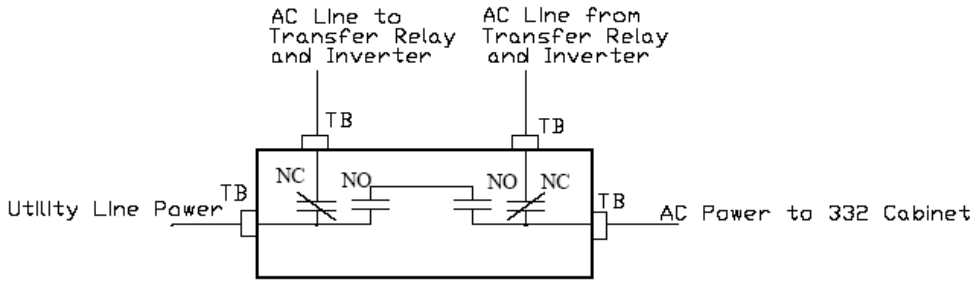

Notes:
1. TB - #8 Terminal Blocks
2. NO - Normally Open
3. NC - Normally Closed
4. NO/NC contacts shall all toggle simultaneously with one single manually operated switch.
5. Manual Bypass Switch shall only switch line. Neutral and Equipment Ground are not switched and shall be connected to 332 Cabinet buses.

d. The BBS shall provide the user with 3-sets of normally open (NO) and normally closed (NC) single-pole double-throw (SPDT) dry relay contact closures, available on a panel-mounted terminal block, rated at a minimum 120V/1A, and labeled so as to identify each contact. For typical configuration, see Figure 925-6.
   1) The first set of NO and NC contact closures shall be energized whenever the unit switches to battery power. Contact shall be labeled or marked “On Batt.”
   2) The second set of NO and NC contact closures shall be energized whenever the battery approaches approximately 40% of remaining useful capacity. Contact shall be labeled or marked “Low Batt.”
   3) The third set of NO and NC contact closures shall be energized two hours after the unit switches to battery power. Contact shall be labeled or marked “Timer.”
   4) Relay contact activation shall be annunciated on the front panel via a visual indication. This can be either discreet LED, or part of LCD screen, etc.

Figure 925 – 6 Relay Contacts (NO/NC) available on panel-mounted terminal block (typ)

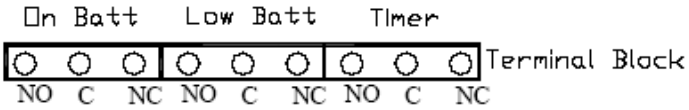

Notes:
1. NO/NC contacts may either share or use separate commons.

e. Operating temperature for both the inverter/charger, power transfer relay and manual bypass switch shall be –37 °C (-35F) to +74 °C (+165 F).

f. Both the Power Transfer Relay and Manual Bypass Switch shall be rated at 240VAC/30 amps, minimum

g. The BBS shall use a temperature-compensated battery charging system. The charging system shall compensate over a range of 2.5 – 4.0 mV/ °C (5-8 F) per cell. The temperature sensor shall be external to the inverter/charger unit. The temperature sensor shall come with 3 meters (10 feet) of wire. Ensure temperature sensor can be mounted to battery with ring terminal to prevent losing connectivity.

h. Batteries shall not be recharged when battery temperature exceeds 50 °C (122 F) ± 3 °C (6 F).

i. BBS shall bypass the utility line power whenever the utility line voltage is outside of the following voltage range: 100VAC to 130VAC (± 2VAC).

j. When utilizing battery power, the BBS output voltage shall be between 110 VAC and 125 VAC, pure sine wave output, ≤ 3% THD, 60Hz ± 3Hz.

k. BBS shall be compatible with CALTRANS Model 332A Cabinets, Model 170E Controllers, Model 2070 Controllers and cabinet components for full time operation.

l. In cases of low (below 98VAC) or absent utility line power, when the utility line power has been restored at above 105 VAC ± 2 VAC for more than 30 seconds, the BBS shall transfer from battery backed inverter mode back to utility line mode.

m. n cases of high utility line power (above 132VAC), when the utility line power has been restored at below 125VAC ± 2 VAC for more than 30 seconds, the BBS shall transfer from battery backed inverter mode back to utility line mode

n. BBS shall be equipped to prevent a malfunction feedback to the cabinet or from feeding back to the utility service.

o. In the event of inverter/charger failure, battery failure or complete battery discharge, the power transfer relay shall revert to the NC (and de-energized) state, where utility line power is connected to the cabinet.

p. Recharge time for the battery, from "protective low-cutoff" to 80% or more of full battery charge capacity, shall not exceed twenty (20) hours.

2. Mounting/Configuration

NOTE: All references made to EIA rail or EIA 19" (482.6mm) rack shall conform to Electronic Industries Standards EIA-310-B, Racks, Panels, and Associated Equipment, with 10-32 "Universal Spacing" threaded holes.

a. General

1) Inverter/Charger Unit shall be shelf-mounted or rack-mounted on a standard EIA 19" rack. If the inverter/charger is mounted inside the 332A Cabinet (Configuration 1), a shelf shall be provided that supports the weight of the unit.

2) Power Transfer Relay and Manual Bypass Switch shall be mounted on EIA rail.

3) All interconnect wiring shall be provided between Power Transfer Relay, Bypass Switch and Cabinet Terminal Service Block and shall be no less than 3 meters (9'10") of UL Style 1015 CSA TEW with the following characteristics:

- AWG Rating: 6 AWG
- Stranding: 133 strands of 30 AWG tinned copper
- Rating: 600 V, 105 °C, PVC Insulation

4. Relay contact wiring provided for each set of NO/NC relay contact closure terminals shall be a minimum of 3 meters (10 feet) of UL Style 1015 CSA TEW 18 AWG wire, same ratings as above, except 16 strands of 30 AWG tinned copper. Wiring shall be of adequate length for particular installation.

5. Figure 925-7 provides clarification as to how BBS Power Transfer Relay and Manual Bypass Switch are interconnected with Model 332A Cabinets in order to ensure interchangeability between all BBS manufacturers.

Figure 925- 7 BBS Utility Power Connection Diagram

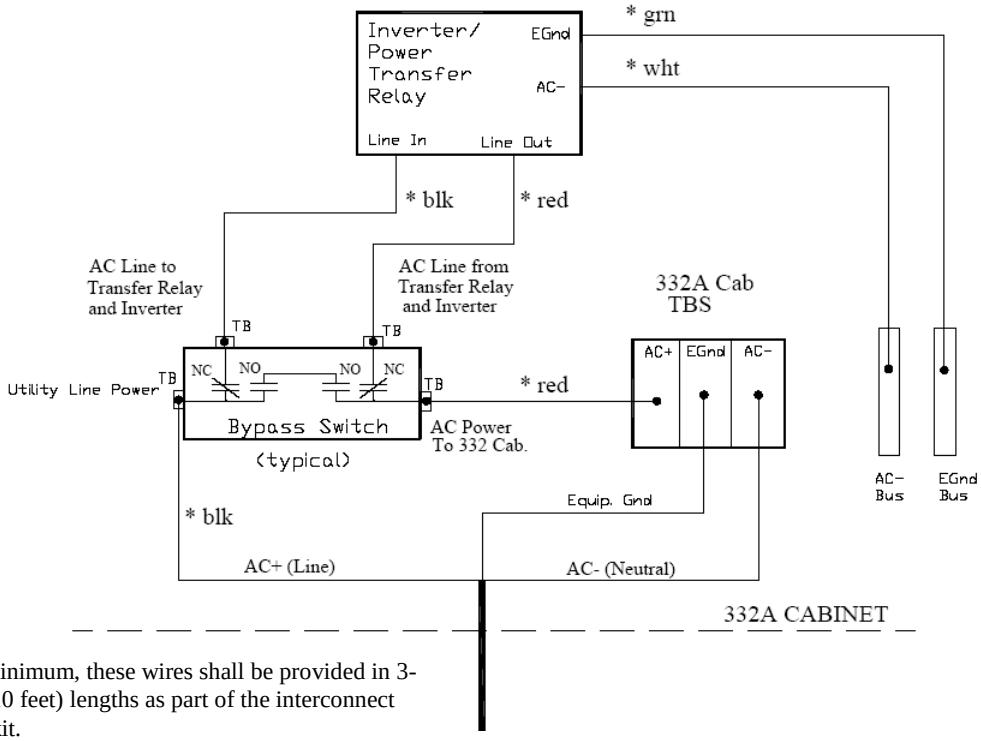

*As a minimum, these wires shall be provided in 3-meter (10 feet) lengths as part of the interconnect wiring kit.

6) All necessary hardware for mounting (shelf angles, rack, etc) shall be included in the bid price of the BBS. All bolts/fasteners and washers shall meet the following requirements:
   - Screw type: Pan Head Phillips machine screw
   - Size and Thread pitch: 10-32
   - Material: 18-8 stainless steel (Type 316 stainless steel is acceptable as an alternate)
   - Washer: Use one flat washer (18-8 stainless steel) under the head of each 10-32 screw (provided that the screws are properly tightened, lock washers are unnecessary.)
   - Number of screws per hinge bracket: Minimum of six (6) screws per hinge bracket spaced evenly along bracket, with one screw near each end.
7) There shall be two (2) basic BBS mounting options:
   a. Configuration 1 – The BBS (Inverter/Charger, Bypass Switch and Transfer Relay only) installed inside the 332A Cabinet, with the batteries installed in the externally mounted cabinet. See Figure 925-8 for location of inverter in 332A cabinet.
   b. Configuration 2 – The entire BBS, including batteries, installed inside the externally mounted cabinet.

Figure 925-8 BBS Mounting Diagram

For a typical Model 332A Cabinet

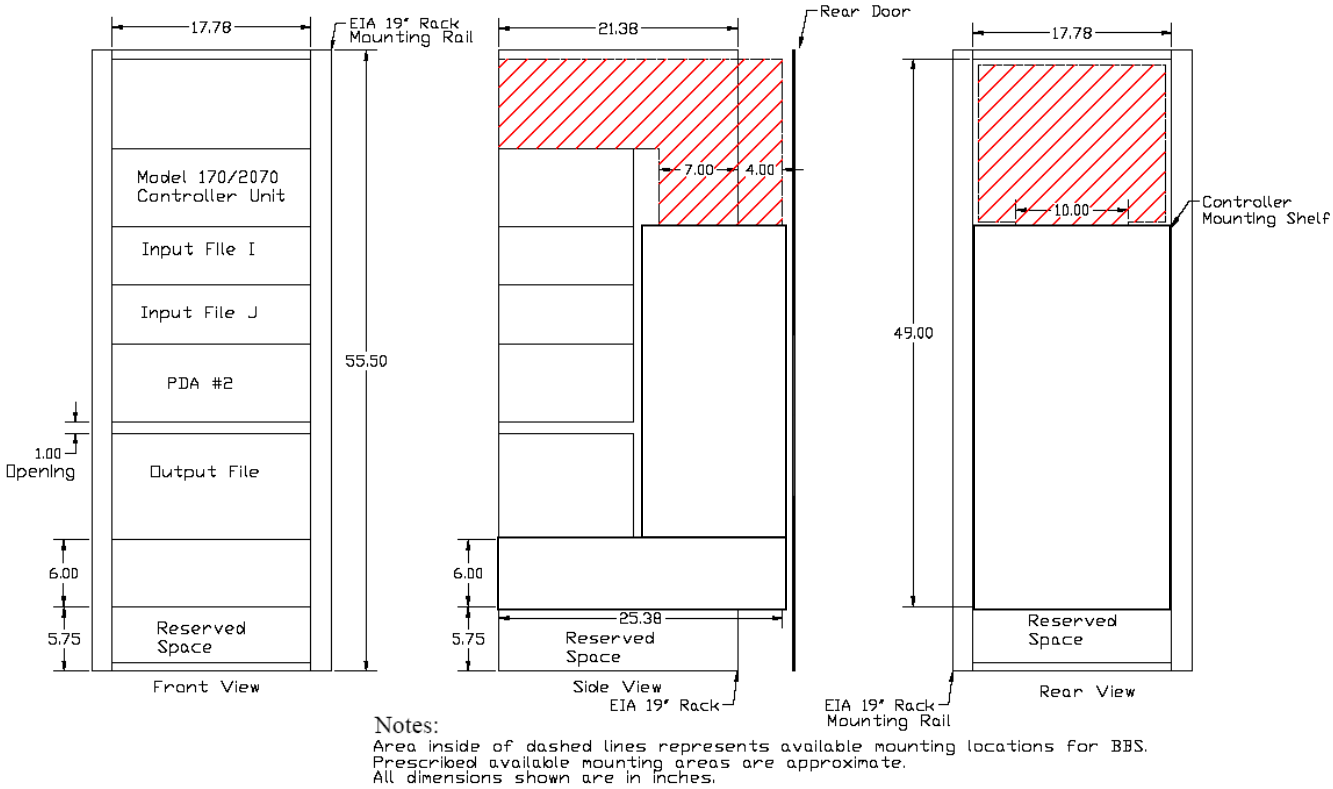

8) External Cabinet

   a. The External Cabinet shall be used for housing batteries and/or BBS, which includes inverter/charger unit, power transfer relay, manually operated bypass switch, any other control panels, and all wiring and harnesses.

   b. The same Inverter/Charger, Power Transfer Relay and manually operated Bypass Switch that fits inside a typical fully equipped CALTRANS Model 332A Cabinet shall also be able to fit inside the externally mounted cabinet.

   c. The External Cabinet shall be a NEMA 3R rated cabinet conforming to TEES, August 16, 2002 Chapter 7, Section 2-Housings for the construction and finish of the cabinet. The specific finish of the external cabinet shall match the finish of the 332A cabinet. Anti-Graffiti paint shall not be used. Two separate mounting installations shall be used. Refer to the project plans for the appropriate mounting installation.

- Mounting Installation Type A shall be typically used for installing at locations with existing 332 cabinet. This cabinet mounting installation shall attach the external cabinet to the side of the 332 cabinet in the relationship as shown in figure 925-9. Type A mounting installation shall use fasteners that meet the following requirements:
    - (Total of 8 bolts per cabinet with 2 flat washers per bolt and 1 K-lock nut per bolt)
    - Cabinet mounting bolts shall be:
    - 18-8 Stainless Steel Hex Head (Fully Threaded)
    - 3/8” – 16 X 1”
    - Washers shall be:
    - Designed for 3/8” bolt
    - 18-8 Stainless Steel 1” OD round flat type
    - K-lock washer shall be:

- 18-8 Stainless Steel, Hex Nut Assembled with Free-Spinning Tooth Washer
- 3/8” – 16 Screw size

External Cabinet to 332A Cabinet couplings shall provide a conduit for power connections between the 332A Cabinet and External Cabinet. The couplings shall consist of three parts and meet the following requirements:

- 2” Nylon Insulated, Steel Chase Nipple
- 2” Sealing, Steel Locknut
- 2” Nylon Insulated, Steel Bushing

The external cabinet shall come provided with all bolts, washers, nuts and cabinet-cabinet coupler fittings provided, necessary for mounting the external cabinet to the 332A Cabinet.

- Mounting Installation Type B shall be typically used for locations where a new traffic controller cabinet and foundation are being installed. This cabinet installation shall provide the external battery cabinet as a base mount cabinet on the same foundation as the 332 cabinet. Connections between the cabinets shall be through conduit in the cabinet base. The external cabinet shall be installed in the same relationship as shown in Figure 925-9 to the 332 cabinet. The external cabinet shall be installed so that it is centered on the 30 inch left side of the 332 cabinet. Bolt BBS cabinet to pre-fab base. BBS cabinet opening shall be larger than the pre-fab base opening.

d. The specific dimensions and details of the external battery cabinet shall be as shown in Figures 925–10 through 925–12.

Figure 925-9 External BBS Cabinet Details

External Battery Cabinet

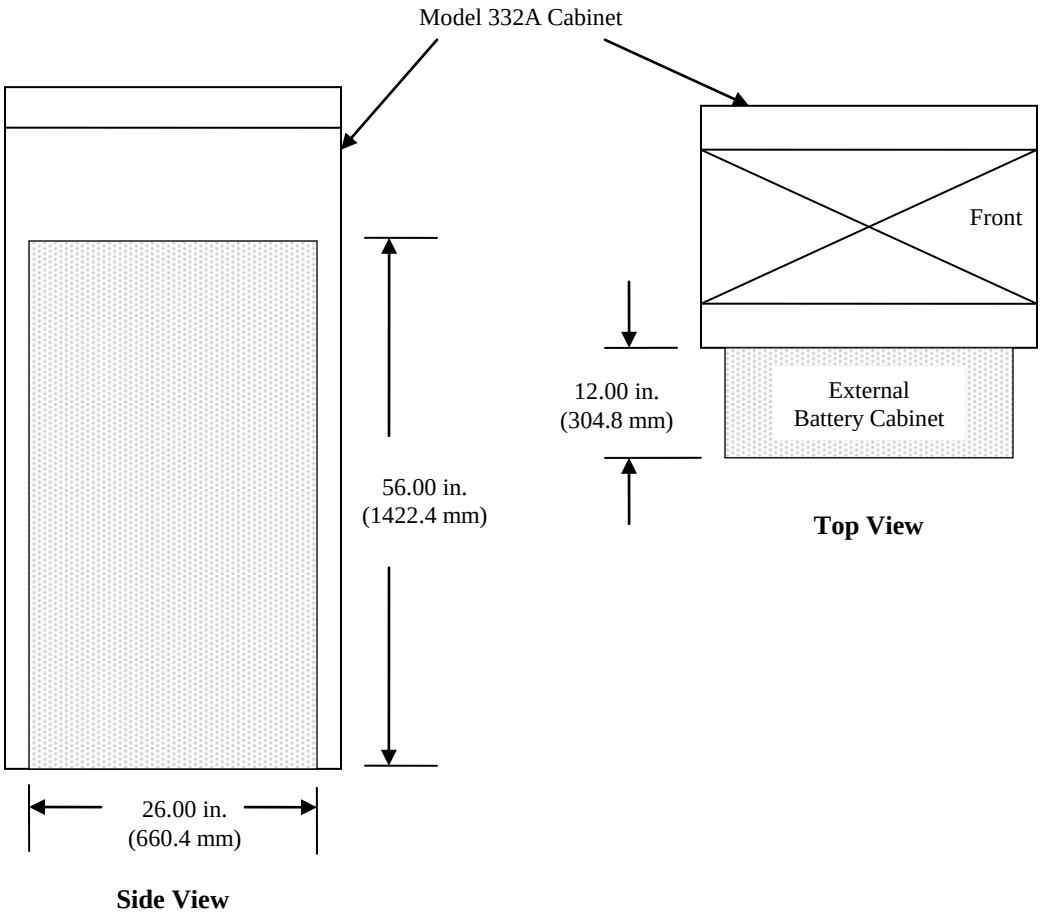

e. Four shelves shall be provided. There shall be a minimum of 304.8mm (12”) clearance between shelves. Each shelf shall be a minimum of 263.65mm (10.38”) X 635.0mm (25”), and capable of supporting a minimum of 57kg (125 lbs.). Shelf edges shall be turned down on all four sides for support and to provide a flat top surface. Shelves shall be predrilled with EIA rail mounting holes. Shelves shall provide a vertical “passageway” for wring in the rear of the cabinet on both the left and right.

f. The bottom shelf shall be capable of being removed.

Figure 925-10 External BBS Cabinet Details

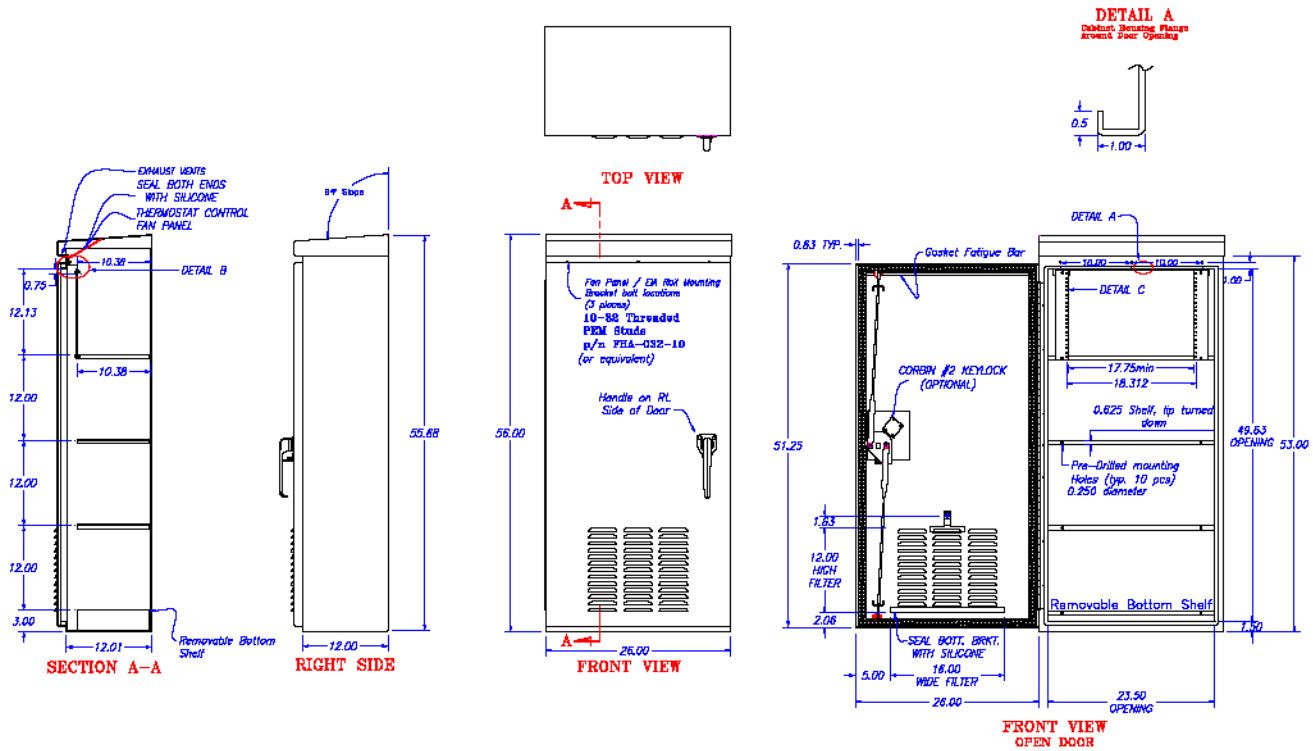

Figure 925-11 EIA Rail for Mounting Inverter or PTR inside External BBS Cabinet

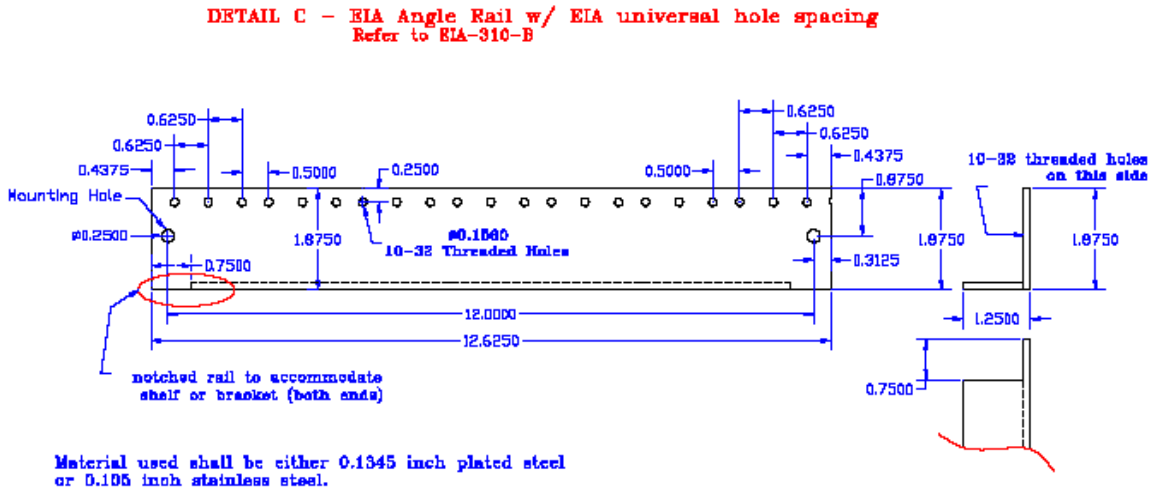

g. The External cabinet shall be ventilated through the use of louvered vents, filter, and one thermostatically controlled fan as per TEES Chapter 7 Section 2-Housings. The thermostat shall be accessible without removing the BBS controller.

h. External cabinet fan shall be AC operated from the same line output of the Manual Bypass Switch that supplies power to the 332 Cabinet. A 2-position terminal block shall be provided on the fan panel, along with 3 meters (10 feet) of connected hookup wire.

i. The door shall be attached to the cabinet through the use of either a continuous stainless steel piano hinge or four, two-bolts per leaf, hinges as per TEES Chapter 7 Section 2. The door shall use a padlock clasp or latch and lock mechanisms as described in the TEES, in order to lock the door.

j. Two EIA angle rails, per Detail C, Figure 925–11, along with all necessary mounting hardware (4 sets of 10-32 bolts and nuts with captive washers) shall be provided with the external cabinet (not installed). Rails shall be symmetric to allow for installation on either right or left sides of the cabinet. Mounting holes and bracket shall allow for EIA rail installation at any location in the external cabinet. The EIA mounting angle nominal thickness shall be either 0.1345 inch (3.4163mm) plated steel or 0.105 inch (2.667mm) stainless steel.

k. EIA rail mounting bracket shall be of continuous, one-piece design bolted into the cabinet to provide adequate support for rail-mounted equipment. See Figure 925–12.

l. Pressed in, flush-head threaded screw posts shall be inserted into the front face of the cabinet enclosure top sill. These threaded posts shall be used to mount both the fan panel and the EIA rail-mounting bracket. The screw posts shall be #10-32 thread size stud 0.625 inches in length. Refer to Figure 925–10, front views for mounting detail.

Figure 925–12 EIA Rail Mounting Bracket for Mounting EIA Rails inside External BBS Cabinet

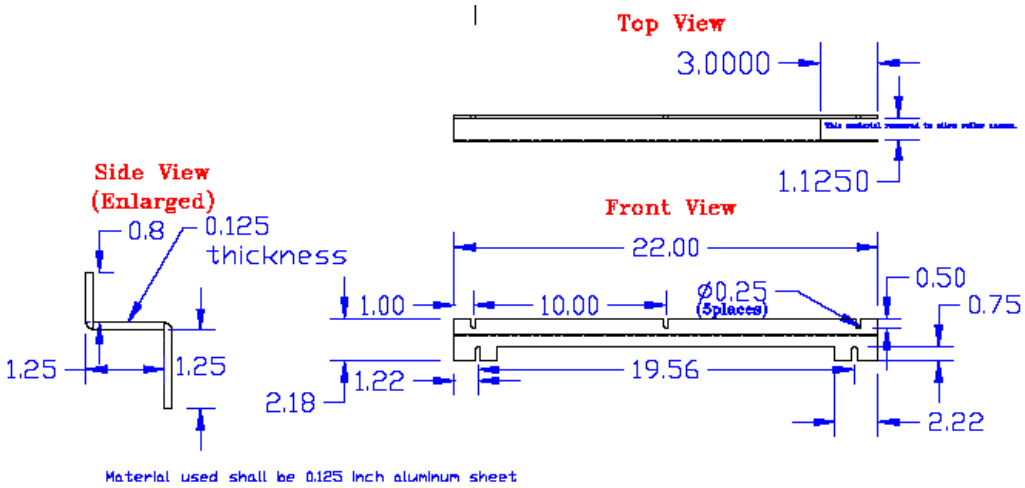

3. Maintenance, Displays, controls and Diagnostics

a. The BBS shall include a display and /or meter to indicate current battery charge status and conditions.

1) The BBS shall provide voltmeter standard probe input-jacks (+) and (-) to read the exact battery voltage drop at the inverter input.

2) The BBS shall include a 0 to 100% battery capacity LED indicator.

b. The BBS shall have lightning surge protection compliant with IEEE/ANSI C.62.41.

c. The BBS shall be equipped with an integral system to prevent battery from destructive discharge and overcharge.

d. The BBS and batteries shall be easily replaced with all needed hardware and shall not require any special tools for installation.

e. The BBS shall include a front-panel event counter display to indicate the number of times the BBS was activated and a front-panel hour meter to display the total number of hours the unit has operated on battery power. Both meters shall be resetable.

f. Manufacturer shall include a set of equipment lists, operation and maintenance manuals, and board-level schematic and wiring diagrams of the BBS, and the battery data sheets. Manual shall conform to TEES August 16, 2002, Chapter 1, Section 1.2.4.2.

4. Battery System

a. Individual batteries shall be:

1) Voltage rating: 12V type

2) Group size: 24 maximum

3) Batteries shall be easily replaced and commercially available off the shelf.

b. Batteries used for BBS shall consist of 4 to 8 batteries with a cumulative minimum rated capacity of 240 amp-hours.

c. Batteries shall be deep cycle, sealed prismatic lead-calcium based AGM/VRLA (Absorbed Glass Mat/ Valve Regulated Lead Acid).

d. Batteries shall be certified by the manufacturer to operate over a temperature range of – 25 °C (-13F) to + 71°C (+160 F).

e. The batteries shall be provided with appropriate interconnect wiring and corrosion-resistant mounting trays and/or brackets appropriate for the cabinet into which they will be installed.

f. Batteries shall indicate maximum recharge data and recharging cycles.

g. Battery Harness

1) Battery interconnect wiring shall be via two-part modular harness.

2) Part I shall be equipped with red (+) and black (-) 12 inch (30.48 cm) cabling that can be permanently connected to the positive and negative posts of each battery. Each red and black pair shall be terminated into an Anderson Power Pole Connector or AMP Power Series Connector or equivalent style connector.

3) Part II shall be equipped with the mating Power Pole style connector for the batteries and a single, insulated Power Pole style connection to the inverter/charger unit. Harness shall be fully insulated and constructed to allow batteries to be quickly and easily connected in any order to ensure proper polarity and circuit configuration.

4) Power Pole style connectors may be either one-piece or two-piece. If a two-piece connector is used, a locking pin shall be used to prevent the connectors from separating.

5) The length of the battery interconnect harness (Part II) shall be a minimum of 60 inches (152.4 cm) from the Inverter/Charger plug to the first battery in the string. The lateral length of the harness between battery connectors shall be a minimum of 12 inches (30.48 cm).

6) All battery interconnect harness wiring shall be UL Style 1015 CSA TEW or Welding Style Cable or equivalent, all of proper gauge with respect to design current and with sufficient strand count for flexibility and ease of handling.

7) Battery terminals shall be covered and insulated with molded boots so as to prevent accidental shorting.

B. Fabrication

Refer to Subsection 925.2.07.A.1 for controller cabinet minimum fabrication Specifications.. AcceptanceGeneral Provisions 101 through 150.

Each BBS shall be manufactured in accordance with a manufacturer Quality Assurance (QA) program. The QA program shall include two Quality Assurance procedures: (1) Design QA and (2) Production QA. The Production QA shall include statistically controlled routine tests to ensure minimum performance levels of BBS units built to meet this specification and a documented process of how problems are to be resolved. The manufacturer, or an independent testing lab hired by the manufacturer, shall perform Design Qualification Testing on new BBS system(s) offered, and when any major design change has been implemented on an existing design. A major design change is defined as any modification, material, electrical, physical or theoretical, that changes any performance characteristics of the system, or results in a different

circuit configuration. Where a dispute arises in determining if a system is a new design or if the system has had a major design change, the State will make the final determination if Design Qualification Testing is required prior to production consideration.

Production Quality Control tests shall be performed on each new system prior to shipment. Failure to meet this requirements shall be cause for rejection. The manufacturer shall retain test results for seven years. Each BBS shall be given a minimum 100-hour burn-in period to eliminate any premature failures. Each system shall be visually inspected for any exterior physical damage or assembly anomalies. Any defects shall be cause for rejection.

D. Materials Warranty

Refer to Subsection 925.2.01.D for Materials Warranties. Manufacturers shall provide a two (2) year factory-repair warranty for parts and labor on the BBS from date of acceptance by the Department. Batteries shall be warranted for full replacement for two (2) years from date of purchase. The warranty shall be included in the total bid price of the BBS.

925.2.07 Flashing Beacon Assembly

A. Requirements

This specification is for a flashing signal cabinet, which consists of an aluminum cabinet containing a flasher assembly, Field connection terminal block, surge arrestor and circuit breaker wired in a manner to operate flashing beacons. Refer to Figure 925-13.

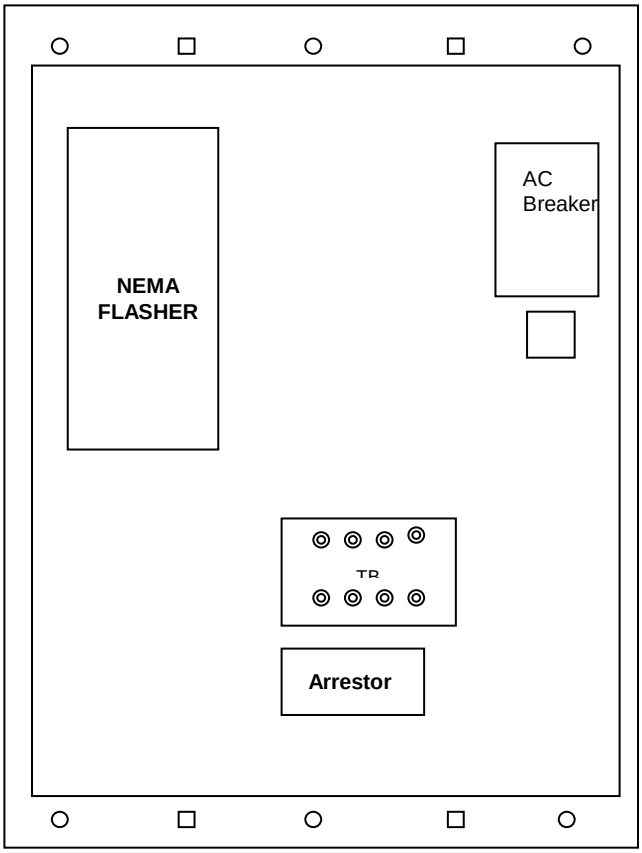

Note: Front view of cabinet Door Assembly not shown
No scale

Figure 925-13—Typical Flashing Signal Cabinet Layout

1. Cabinet

   Supply a NEMA Type 3R cabinet assembly, manufactured of aluminum with a minimum thickness of 0.125 inches (3 mm).

   Ensure that the cabinet exterior has a smooth, uniform "bare" aluminum finish with all joints between adjoining cabinet components (sides and bottom) continuously welded on the outside to prevent the intrusion of moisture and dust.

   Ensure that all welds are free of cracks, blow holes and other irregularities.

   Supply a cabinet with the following exterior dimensions:

	Minimum	Maximum
Height	14 inches (350 mm)	18 inches (450 mm)
Width	10 inches (250 mm)	14 inches (350 mm)
Depth	7 inches (175 mm)	10 inches (250 mm)

   Use a cabinet door that is double flanged on all four sides to prevent the entry of dirt and liquids when the door is open.

   Install a one-piece gasket formed around the door opening to insure a weather tight seal when the door is secured.

   Attach the door to the cabinet housing by a continuous tamper proof hinge.

   Equip each cabinet with a Corbin #2 lock and one key. Police panel type locks are not acceptable.

   Install an aluminum back panel in the cabinet, mounted on standoffs, to facilitate mounting of internal components.

   Install exterior aluminum mounting brackets, which extend a minimum of 1.75 inches (44 mm) and a maximum of 2.5 inches (63 mm) from the top and bottom of the cabinet.

   Use brackets that extend across the full width of the cabinet back on the top and bottom.

   Provide these brackets with holes for mounting to a flat surface with screws and vertical slots for banding to steel, concrete or wooden signal poles.

2. Flasher Unit

   Supply a standard plug in two circuits NEMA flasher.

   Ensure that the flasher is of all solid state construction, meets the requirements of the NEMA Standards and is rated at a minimum of 10 A per circuit.

   Ensure that the flasher utilizes zero voltage turn-on and turn-off current and is capable of dimming outputs.

3. Surge Arrestor

   Supply a flasher cabinet that incorporates an AC surge arrestor to protect the internal components from lighting and over voltages on the AC service input.

   The requirements for the surge arrestor are:

   - Two Stage Arrestor
   - Peak Surge Current 20000 A
   - Peak Surge Voltage @ 20KA 280 V
   - Clamp Voltage 280 V @ 20 kA
   - Continuous AC Voltage 120 V AC RMS
   - Response Time <5 nsec
   - Operating Temp. -40 ºF to 185 ºF (-40 ºC to 85 ºC)

4. Circuit Breaker

   Include a 15 A circuit breaker in the cabinet. The circuit breaker shall have the following characteristics.

   - Thermal Magnetic 1 pole 120/240 VAC at 50/60 Hz 15 A
   - Interrupting Rating of 10KA at 48 VDC
   - Wire Size 14 to 2 AWG

- 35 MM Din Rail mounting

5. Terminal Block

   Include a four position terminal block in the cabinet for making field connections. Properly label all field terminal connections.

6. Construction

   Assemble the flasher assembly, terminal block, surge arrestor and circuit breaker in the cabinet as shown on the attached drawing.

   Wire all components together as a working unit, thus requiring only field connections to and from the AC power and flashing beacons.

B. Fabrication

Refer to Subsection 925.2.07.A.1 for controller cabinet minimum fabrication specifications.

C. Acceptance

General Provisions 101 through 150.

D. Materials Warranty

Refer to Subsection 925.2.01.D for Materials Warranties.

925.2.08 Flashing Signal Cabinet With Time Clock

A. Requirements

This specification is for a flashing signal cabinet with time clock which consists of an aluminum cabinet containing a flasher assembly, time clock, field connection terminal block, surge arrestor and circuit breaker wired in a manner to operate school flashing beacons. Refer to Figure 925-14.

1. Cabinet

   Supply a NEMA Type 3R cabinet assembly that is manufactured of aluminum with a minimum thickness of 0.125 inches (3 mm).

   Ensure that the cabinet exterior has a smooth, uniform natural aluminum finish, and that all joints between adjoining cabinet components (sides and bottom) are continuously welded on the outside to prevent the intrusion of moisture and dust.

   Ensure that all welds are free of cracks, blow holes and other irregularities.

   The exterior dimensions of the cabinet are as follows:

	Minimum	Maximum
Height	14 inches (350 mm)	18 inches (450 mm)
Width	14 inches (350 mm)	14 inches (350 mm)
Depth	11 inches (279 mm)	16 inches (400mm)

   Supply a cabinet door that is double flanged on all four sides to prevent the entry of dirt and liquids when the door is open.

   Use a one-piece gasket that is formed around the door opening to insure a weather tight seal when the door is secured.

   Attach the door to the cabinet housing with a continuous tamper proof hinge.

   Provide each cabinet with a Corbin #2 lock and one key. Police panel type locks are not acceptable.

   Supply each cabinet with an aluminum back panel mounted on standoffs to facilitate mounting of internal components.

   Supply cabinets with exterior aluminum mounting brackets, which extend a minimum of 1.75 inches (44 mm) and a maximum of 2.5 inches (63 mm) from the top and bottom of the cabinet.

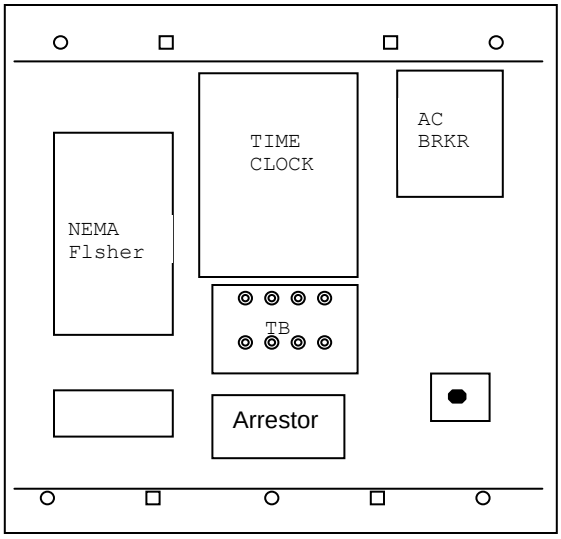

Use brackets that extend across the full width of the cabinet back on the top and bottom.

Provide these brackets with holes for mounting to a flat surface with screws and vertical slots for banding to steel, concrete or wooden signal poles.

Note: Front view of cabinet Door Assembly not shown

No scale

Figure 925-14—Typical Flashing Cabinet with Time Clock Cabinet Layout

2. Flasher Unit

   Supply a standard plug in, two circuits NEMA flasher.

   Ensure that the flasher is of all solid state construction, meets the requirements of the NEMA Standards and is rated at a minimum of 10 A per circuit.

   Ensure that the flasher utilizes zero voltage turn-on and turn-off current and be capable of dimming outputs.

3. Time Switch

   Supply a time switch that meets the requirements of Subsection 925.2.09 of this specification.

4. Surge Arrestor

   Supply flasher cabinets that incorporate an AC surge arrestor to protect the internal components from lighting and over voltages on the AC service input.

   The requirements of the surge arrestor are as follows:

   - Two Stage Arrestor
   - Peak Surge Current 20000 A
   - Peak Surge Voltage @ 20KA 280 V
   - Clamp Voltage 280 V @ 20 kA
   - Continuous AC Voltage 120 V AC RMS
   - Response Time <5 nsec
   - Operating Temp. -40 ºF to 185 ºF (-40 ºC to 85 ºC)

5. Circuit Breaker

   - Include a 15 A circuit breaker in each cabinet. The circuit breaker shall have the following characteristics.
   - Thermal Magnetic 1 pole 120/240 VAC at 50/60 Hz 15 A
   - Interrupting Rating of 10KA at 48 VDC
   - Wire Size 14 to 2 AWG

- 35 MM Din Rail mounting

6. Terminal Block

   Include a four position terminal block in each cabinet for making field connections. Properly label all field terminal connections.

7. Construction

   Assemble the flasher assembly, terminal block, surge arrestor and circuit breaker in the cabinet as shown on the attached drawing.

   Wire all components together as a working unit, thus requiring only field connections of the AC power and flashing beacons.

B. Fabrication

Refer to Subsection 925.2..07.A.1 for controller cabinet minimum fabrication Specifications.

C. Acceptance

General Provisions 101 through 150.

D. Materials Warranty

Refer to Subsection 925.2.01.D for Materials Warranties.

925.2.09 Time Clock

A. Requirements

Supply time clocks that are single circuit, calendar programmable, solid state, fully self-contained units (RTC AP 22 or Eltec TC18 or equivalent) that meet the following Specifications:

1. Alphanumeric liquid crystal display.
2. Automatic daylight savings time and leap year compensation. Changes in the daylight savings time program made through the keypad do not require hardware modification.
3. Minimum twenty-four (24) hour capacitive back up. Battery back up is not acceptable.
4 Keypad entry programming without the use of any external devices such as a PC, external programming unit, another time switch, etc.
5. Operate on 95 to 135 V AC, 60 Hz line current.
6. SPDT relay output rated at 15 A.
7. Maximum size of 4.75 inches (121 mm) wide, 10.375 inches (2636 mm) high and 2 inches (50 mm) deep.
8. A programming manual is to be included with each unit.
9. Ability to do program transfer from unit to unit. Include program transfer cable with unit.
10. Ability to run minimum six (6) different day plans and minimum twenty five (25) different annual exception plans.Temperature range of -30º F (-34º C) + 165º F (74º C).

B. Fabrication

General Provisions 101 through 150.

C. Acceptance

General Provisions 101 through 150.

D. Materials Warranty

Refer to Subsection 925.2.01.D for Materials Warranties.

925.2.10 Self Tuning Loop Detector

A. Requirements

This specification sets forth the minimum acceptable design, operational and functional performance requirements for multi-channel, inductive loop vehicle detection systems.

1. General Requirements
   a. Mounting

      Ensure that the unit is configured for rack mount insertion into a NEMA (TS l or TS 2) card rack and/or CALTRANS Type 2070 cabinet input file.

   b. Environmental

      Ensure that the unit is in full compliance with the environmental tests, transient tests and size requirements of NEMA standard TS-l Section 15, TS-2 Section 6.5 and the California Type 2070 Specifications.

      Provide documentation from an independent laboratory, which certifies that the unit is in compliance with the above Specifications.

   c. LED Indicator

      Ensure that each channel includes two high visibility LED indicators; one for the detect state and the second to indicate the status of the fault monitor.

   d. Phase Indicator

      Ensure that each channel has an erasable write-on pad to aid in identification of the associated phase or function.

2. Operational Requirements
   a. Tuning

      Supply units that are fully digital and self-tuning.

      Ensure that each channel of the unit can automatically tune to any loop and lead in combination within two (2) seconds of application of power or when a reset signal is received.

      Ensure that the tuning circuit is designed so that drift, caused by environmental changes or changes in applied power, does not cause false actuations.

   b. Scanning

      Supply units that sequentially scan each channel (only one channel energized at any given time) to eliminate crosstalk from multiple loops in adjacent lanes and/or allow overlapped loops for directional control and/or allow use of multi-conductor homerun cable when connected to the same detector unit.

   c. Sensitivity Setting

      Ensure that each channel is equipped with front panel selectable sensitivity settings in presence and pulse modes.

   d. Frequency

      Supply units that have a minimum of three switch selectable operating frequencies.

   e. Inductance Range

      Ensure that each channel can tune to an inductive load from 50 to 2000 microhenries with a Q factor > 5.

   f. Grounded Loops

      Ensure that each channel can continue to operate with poor quality loop systems (Q>2) including those that have a single point short to ground.

   g. Fault Monitoring

      Supply units that constantly monitor the operation of each channel.

      Ensure that the unit detects shorted loops, open circuit loops or sudden changes in inductance (>25% of nominal).

      Ensure that each type of fault is indicated on a fault LED by a unique sequence of flashes until the fault is rectified.

Ensure that while the channel is in the fault condition, the channel output remains in the detect state.

When the fault is rectified, the fault LED continues to emit the sequence signifying the last fault detected, but the detect LED and output returns to normal operation.

h. Failsafe Output

Ensure that each channel output generates a continuous solid state output to the controller when power to the detector is removed.

i. Operational Modes

Supply units with each channel selectable for either pulse or presence modes and that meet the following requirements:

- Pulse Mode
- This setting provides a single output pulse (125 ms +/- 25) in response to a vehicle entering the loop.
- If a vehicle remains in the sensing zone in excess of two (2) seconds, the unit "tunes out" said vehicle.
- The channel is then capable of detecting another vehicle entering the same detection zone.
- Presence Mode
- The presence hold time is a minimum of four (4) minutes for small vehicles (motorcycles) and a minimum of sixty (60) minutes for automobiles.
- Ensure that the unit tunes out of continuous peak hour traffic over long or multiple small loops as long as there is vehicle motion in the sensing zone every ten (10) minutes.

j. Resets

Ensure that the channels are manually resettable by removing the power momentarily.

Ensure that the channels reset remotely when the voltage on Pin C falls below 8 V DC for a period > l5µs, and that the unit resumes normal operation within four (4) seconds after the application of power or after a reset signal of l5µs.

k. Field Tuning

Ensure that field adjustments to the operation of the detector do not require the use of a meter, circuit changes, special software or any substitutions, modifications or additions to the unit.

3. Performance Requirements

If testing should be required, provide the Department with a test unit and/or software within ten (10) calendar days of the request.

Should the unit fail to meet the design and/or performance requirements of this specification, the unit will be rejected.

Ensure that the units meet the following requirements:

a. Capable of detecting passage, holding presence and accurately counting all types of licensed motor vehicles when connected in various loop configurations and lead-in combinations without detecting vehicles in adjacent lanes.

- Typical Loop Configurations with Lead-in of 5 feet (1.5 m) to 1,500 feet (1000 m) are:
- 6 feet x 6 feet (1.8 m x 1.8 m)
- 6 feet x 20 feet (1.8 m x 6 m)
- 6 feet x 40 feet [(1.8 m x 12 m) standard or quadrupole]

b. Capable of responding to an inductance change of 0.02% and sense vehicles at speeds of up to 80 mph (130 km/h).

c. Not detect vehicles, moving or stopped, at distances greater than three feet for any loop perimeter.

d. Detect all vehicles over multiple turn and/or multiple loops that may he connected in series, parallel or series/parallel with homerun lengths from <5 feet (1.5 m) to > 1,500 feet (1,000 m).

4. Optional Features

In addition to the requirements listed in the previous sections, the units may be requested with any combination of the following optional features:

a. Option 1- Timing Features - Delay & Extension

When this option is specified, ensure that the unit incorporates the following features:

1) Delay Timing

Minimum selectable delay time of 1 to 30 seconds in minimum 1-second increments for each channel.

2) Extension Timing

Minimum selectable extension time of 0.5 to 10 seconds in minimum 0.5-second increments for each channel.

b. Option 2 - Advanced Features

When the option for advanced features is specified, supply units that incorporate the following advanced features:

1) Serial Port Interface

When the serial port interface is specified, equip the detector with a front and rear panel RS 232 port for the transmission of data. Provide Windows 95 compatible software for interfacing with the detector.

2) PC Interface

Ensure that PC software, when connected directly to the unit through the front panel RS 232 port, provides a screen to display the following loop system operating characteristics, on a per channel basis, for system setup, data collection and diagnostics.

- Loop Status
- Loop Inductance (μH)
- Loop Frequency (kHz)
- Inductance Change (nH)
- Last Fault: Open, Shorted, >25% □L
- Fault Occurrence: Date & Time
- Vehicle Count

3) Speed, Volume & Occupancy

The software, when connected directly to the unit, is capable of collecting and storing speed, volume and occupancy data from each detector channel.

The software allows assignment of loop-to-loop distances to enable accurate speed and vehicle length measurements.

The speed volume and occupancy information is uploaded and stored in the vendor-supplied software.

Upon request, supply the necessary information/protocols to allow the Department to write custom software to retrieve speed, volume and occupancy data.

B. Fabrication

General Provisions 101 through 150.

C. Acceptance

General Provisions 101 through 150.

D. Materials Warranty

Refer to Subsection 925.2.01.D for Materials Warranties.

925.2.11 Loop Sealant

A. Requirements

Furnish and install loop sealant according to Subsection 833.2.09, "Polyurethane Sealant for Inductive Loops". For a list of sources, see QPL 75.

B. Fabrication

General Provisions 101 through 150.

C. Acceptance

General Provisions 101 through 150.

D. Materials Warranty

Refer to Subsection 925.2.01.D for Materials Warranties.

925.2.12 Vehicle Signal Heads

A. Requirements

Supply vehicle signal heads that are 12 inches (300 mm) in diameter for traffic signal control applications. For ramp metering systems supply both 12 inches (300 mm) and 8 inches (200 mm) as per the Plans.

Ensure that the 8 inch (200mm) or 12 inch (300 mm) polycarbonate vehicle signal heads meet the current ITE specification on Vehicle Traffic Control Signal Heads with the following modifications and / or clarifications:

1. Unless otherwise approved by the Engineer or as noted on the Plans, supply signal heads with the following exterior color scheme:
   - Signal Housing - Highway Yellow.
   - Front Face including Doors and Visors: Flat Black
2. Provide housing and housing door that are one piece injection molded ultraviolet and heat stabilized polycarbonate resin with the color impregnated in the material.
3. Terminate the wiring from each signal section in the top section of the head assembly. Ensure that the cable jacket is a minimum of 6 inches inside the signal head assembly.
4. Provide the appropriate Vehicle Signal LED Signal in each section either Circular or Arrow Module.
5. Provide an effective seal with the LED module to make the assembly weather tight.
6. Mount one aluminum reinforcing support plate in the top of the red section of each three and four section signal head for the installation of mounting hardware.
7. All five section heads or heads equipped with 2-way mounting hardware shall have aluminum mounting support plates installed in the top and bottom of the red section/sections for mounting hardware.
8. Install a support plate between each section of all signal heads. Place these plates such that there is a plate in the bottom of and/or top of any sections where sections adjoin to another section.
9. Provide Signal Heads that use stainless steel hardware and are weather tight. Ensure signal heads that are supplied are sealed for mounting in all possible configurations.
10. Provide Signal Heads that have housing door that "positively" latches using two eyebolts and wing nuts. Ensure the Signal door has hinge lugs molded on one side and two latch jaws are molded on the other side.
11. Provide signal heads that provide a positive method of holding the lens such that the lens does not rotate. Ensure the lens is weather tight. Lens clips which do not apply firm pressure to the lens gasket to avoid rotation are not acceptable. When constructing side by side signal sections ensure that both doors can open at the same time (butterfly). When doors are open ensure that the door will remain attached to housing. Ensure bottom section has drainage holes.

B. Fabrication

Refer to ITE Standards for material composition and finish Specifications.

C. Acceptance

Refer to ITE Standards for material composition, finish Specifications, and wind loading requirements.

D. Materials Warranty

Refer to Subsection 925.2.01.D for Materials Warranties.

925.2.13 Pedestrian Signal Head

A. Requirements

Provide each section with a visor encompassing the top and sides of the signal face of a size and shape adequate to shield the lens from external lighted sources.

An acceptable option is a "Z-crate" or louver type visor for mounting over the Pedestrian signal face.

Construct the housing of one piece cast aluminum alloy with two integrally hinge lugs, screw slots and openings at each end. Construct the door of one piece cast aluminum alloy with two hinge lugs cast on top of the door and two latch points cast on the bottom. Provide hinge pins of stainless steel to attach the door to the housing and two eye bolts and wing nuts on the other side of the door.

Ensure that the door is provided with a neoprene gasket capable of making a weather resistant, dustproof seal when closed. Supply Pedestrian signal heads with a black face and a yellow body, unless otherwise specified on the Plans.

Ensure that Pedestrian indications are distinguishable to the Pedestrian both day and night and at all distances from 10 feet (3 m) to the full width of the areas to be crossed.

Use symbols that are 12 inches (300 mm) high. Use only internal illumination.

Ensure that when illuminated, the "HAND" symbol is Portland Orange and the "PERSON" symbol is Lunar White, meeting the ITE Standards. Ensure that an opaque material obscures all areas of the face or lens, except for the message. Ensure that when not illuminated, the symbols are not to be distinguishable by Pedestrians at the far end of the crosswalk they control.

B. Fabrication

General Provisions 101 through 150.

C. Acceptance

General Provisions 101 through 150.

D. Materials Warranty

Refer to Subsection 925.2.01.D for Materials Warranties.

925.2.14 Optically Programmed Signal Head

A. Requirements

Supply signal heads that permit the visibility zone of the indication to be determined optically and require no hoods or louvers.

The projected indication may be selectively visible or veiled anywhere within 15 degrees of the optical axis.

Ensure that no indication results from external illumination and that one light unit does not illuminate a second. The components of the optical system include the lamp, lamp collar, optical limiter-diffuser, and objective lens.

Ensure that the optical system accommodates projection of diverse, selected indications to separate portions of the roadway such that only one indication will be simultaneously apparent to any viewer.

Ensure that the projected indication conforms to ITE transmittance and chromaticity Standards.

1. Construction
   a. Provide an LED Lamp Module that is a direct replacement for the incandescent lamp. Ensure the Lamp modules are on the latest CALTRANS QPL for LED Programmed Visibility Modules. Ensure the unit provided operates over the voltage range of 80 to 135 VAC and the temperature range of -40 C (-40 F) to 74 C (165 F). Provide modules that conform to the applicable portions of section 925.2.15. Ensure the unit provides a minimum luminous intensity of 500 candela and does not exceed 18 watts at 25 C (77 F).

      Couple the lamp to the diffusing element with a collar including a specular inner surface. The diffusing element may be discrete or integral with the convex surface of the optical limiter.
   b. Supply an optical limiter with an accessible imaging surface at focus on the optical axis for objects 900 to 1,200 feet (270 to 360 m) distance and permit an effective veiling mask to be variously applied as determined by the desired visibility zone.

      Ensure that the optical limiter is provided with positive indexing means and is composed of heat-resistant glass.
   c. Ensure that the objective lens is a high-resolution planar incremental lens hermetically sealed within a flat laminate of weather resistant acrylic or approved equal.

      Supply a lens that is symmetrical in outline and that may be rotated to any 90-degree orientation about the optical axis without displacing the primary image.
2. Mounting
   a. Supply signals that mount to standard 1.5 inch (38 mm) fittings as a single section, as a multiple section face, or in combination with other signals.

      Provide signal sections with an adjustable connection that permits incremental tilting from 0 to 10 degrees above or below the horizontal while maintaining a common vertical axis through couplers and mounting.

      Ensure that terminal connections permit external adjustment about the mounting axis in 5-degree increments.
   b. Ensure that the signal is mountable with ordinary tools and capable of being serviced with no tools.

      Supply attachments such as back plates or adapters that conform and readily fasten to existing mounting surfaces without affecting water and light integrity of the signal. Supply heads with tri-studs for mounting.
3. Electrical

   Supply lamp fixtures that comprise a separately accessible housing and integral lamp support indexed ceramic socket and self-aligning, quick release lamp retainer.

   Ensure that electrical connection between case and lamp housing can be accomplished with an interlock assembly, which disconnects lamp holder when opened. Include a covered terminal block for clip or screw attachment of lead wires for each signal section.

   Use concealed No. 18 AWG, stranded and coded wires to interconnect all sections to permit field connection within any section.
4. Photo Controls

   Ensure that each signal includes integral means for regulating its intensity between limits as a function of the individual background illumination.

   Ensure that lamp intensity is not less than 97% of uncontrolled intensity at 10 750 lux, and reduces to 15 + 2% of maximum at less than 10.75 lux.

   Ensure that response is proportional and essentially instantaneous to any detectable increase of illumination from darkness to 10 750 lux, and damped for any decrease from 10 750 lux.

   Ensure that the intensity controller is comprised of an integrated, directional light sensing and regulating device interposed between lamp and line wires.

   Ensure that it is compatible with 60 Hz input and responsive within the range 105 to 135 V AC.

Output may be phase controlled, but ensure that the device provides nominal terminal impedance of 1,200 Ω open circuit and a corresponding holding current.

B. Fabrication

General Provisions 101 through 150.

C. Acceptance

General Provisions 101 through 150.

D. Materials Warranty

Refer to Subsection 925.2.01.D for Materials Warranties.

925.2.15 LED Signal Modules

A. Requirements

This specification covers Type 1 Light Emitting Diode (LED) red, green and yellow modules for vehicle signals for both Circular and Arrow indications. It also covers LED Pedestrian "HAND & PERSON" signal modules.

1. General Requirements All Modules

   Ensure that Type 1 LED signal module include a LED circuit board with LEDs and required circuit components, 36 inch (900 mm) 16 AWG wire leads with strain relief and spade terminals, a rigid housing, and a one piece neoprene gasket.

   Supply Type 1 LED signal modules that are watertight when mounted in the traffic signal housing.

   Submit life data on the LEDs from the LED Signal Module manufacturer to calculate the expected useful life.

   Supply modules with permanent markings of date of manufacture and date of installation.

   Ensure that the Type 1 LED signal modules utilize the same mounting hardware that is used to secure the incandescent lens and gasket assembly.

2. Optical All Modules

   Provide test data from an independent laboratory to verify that the performance of the product meets current ITE requirements.

   Ensure that the individual LEDs are wired such that a catastrophic failure of one LED will result in the loss of not more than 5% of the signal module light output.

   The failure of a single LED in a string or cluster of LED's causes loss of light from only that LED, not the entire string or indication.

   Provide control circuitry that prevents the current flow through the LEDs in the "off" state to avoid any false indications as may be perceived by the human eye during daytime and nighttime hours.

   Ensure that the LED signal module is operationally compatible with existing or new supplied conflict monitors (NEMA TS-1, NEMA TS-2, Model 210, Model 2010, ITS Cabinet CMU and AMU)..

   Ensure that the LED Signal Module is operationally compatible with existing or new supplied load switches.

3. Electrical All Modules

   Supply LED signal modules that operate over the temperature range of –40 ºF to 165 ºF (-40 °C to 74 ºC).

   Ensure that the power factor is 90% or greater, at nominal rated voltage, at 77 ºF (25 °C), after 60 minutes of operation. Provide modules that do not exceed the maximum power consumption as shown in Table 925-18.

Table 925-18 Maximum Power Consumption (in Watts) at 25 C (77 F) & 74 C (165 F)						
Vehicle Indications	**Red**		**Yellow**		**Green**	
Temperature	**25 C**	**74 C**	**25 C**	**74 C**	**25 C**	**74 C**
12 Inch (300 mm) Circular	11	17	22	25	15	15
8 Inch (200 mm) Circular	8	13	13	16	12	12
12 Inch (300 mm) Arrow	9	12	10	12	11	11
Pedestrian Indications	**Hand**				**Man**	
Temperature	**25 C**	**74 C**	**25 C**	**74 C**	**25 C**	**74 C**
12 Inch (300 mm)	10	12			9	12

Ensure that the total harmonic distortion (THD) is less than 20% at rated voltage, at 77 ºF (25 °C) and that all LED traffic signal modules are in compliance with FCC noise regulations.

Ensure that the LED signal modules operate on line voltage, 120 V AC nominal, and are able to operate over the voltage range of 80 V AC to 135 V AC. Power Supply must be integral to the module.

Provide transient voltage suppression rated at 1,500 W for 1 millisecond and fusing with a maximum rating of 2 A to minimize the effect and repair cost of an extreme over voltage situation or other failure mode.

Ensure the lens of the modules that are polymeric and are not frosted have a surface coating to provide front surface abrasion resistance. Ensure the Red and Yellow section module lens are tinted to correspond with the wavelength (chromaticity) of the LED. Ensure Green Section modules are clear.

Ensure the modules allow a reduction of the intensity of the light output in response to an input from the traffic signal controller. Ensure the minimum light output when dimmed is not less than 30% of the minimum maintained luminous intensity as defined in the applicable Signal Head Module.

4. Circular Signal Modules

Supply LED Circular Signal Modules that fit in standard incandescent vehicle traffic signal housings and meet the Performance Specification of the ITE Vehicle Traffic Control Signal Heads: LED Circular Signal Supplement. In case of conflict, this specification shall govern. Before delivery of any modules supply certification that module is to be in compliance with these specifications. In addition substantiating documentation must be supplied from an independent test laboratory to show the product has passed design qualification testing in accordance with section 6.4 of the ITE Vehicle Traffic Control Signal Heads: LED Circular Signal Supplement. Ensure the report includes a Minimum Maintained Luminous Intensity chart for the module being provided that uses the same horizontal and vertical angles as shown in Table 1 of the ITE Vehicle Traffic Control Signal Heads: LED Circular Signal Supplement. Ensure all modules are provided with a signed copy of the production and test and inspection as detailed in section 6.3 of the ITE Vehicle Traffic Control Signal Heads: LED Circular Signal Supplement.

Supply lenses for that are made of ultraviolet stabilized polycarbonate. Ensure that the external lens surface is smooth, with no raised features, to, minimize the collection of dirt, diesel smoke, and other particulate contaminates, and to facilitate periodic cleaning.

Ensure that Circular Signal Modules have prominent and permanent markings to designate the proper orientation of the signal module in the traffic signal housing. This marking should be an up arrow or the word “UP” or “TOP”.

Ensure Circular Signal Module meets the photometric requirements as indicated and described in the ITE VTCSH LED Circular Signal Supplement.

Supply Red and Yellow LEDs that utilize AllnGap technology, either AS (Absorbing Substrate or TS (Transparent Substrate) and do not exhibit degradation of more than 30% of their initial light intensity following accelerated life testing (operating at 185 F (85 C) and 85% humidity, for 1000 hours). AlGaAs technology is not acceptable.

Supply Green LEDs that utilize gallium nitride technology.

5. Vehicle Arrow Signal Modules

   Supply LED Arrow Signal Modules that fit in standard incandescent vehicle traffic signal housings and meet the Performance specification of ITE Vehicle Traffic Control Signal- LED Vehicle Arrow Traffic Signal Supplement.

   Ensure that Arrow Signal Modules provided are omni directional and marked as OD so that they may be rotated at any angle. Ensure the Arrow modules Photometrics support the luminous intensity as indicated in table 925-19.

   Before delivery of any modules supply certification that module is to be in compliance with these specifications. In addition substantiating documentation must be supplied from an independent test laboratory to show the product has passed design qualification testing in accordance with section 6.4 of the ITE Vehicle Traffic Control Signal Heads: LED Circular Signal Supplement. Ensure the report includes a Minimum Maintained Luminous Intensity chart for the module being provided that uses the same horizontal and vertical angles as shown in Table 1 of the ITE Vehicle Traffic Control Signal Heads: LED Vehicle Arrow Traffic Signal Supplement. Ensure all modules are provided with a signed copy of the production and test and inspection as detailed in section 6.3 of the ITE Vehicle Traffic Control Signal Heads: LED Vehicle Arrow Traffic Signal Supplement.

   Supply lenses for that are made of ultraviolet stabilized polycarbonate. Ensure that the external lens surface is smooth, with no raised features, to, minimize the collection of dirt, diesel smoke, and other particulate contaminates, and to facilitate periodic cleaning. Supply Red and Yellow LEDs that utilize AllnGap technology, either AS (Absorbing Substrate or TS (Transparent Substrate) and do not exhibit degradation of more than 30% of their initial light intensity following accelerated life testing (operating at 185° F (85° C) and 85% humidity, for 1000 hours). AlGaAs technology is not acceptable.

   Supply Green LEDs that utilize gallium nitride technology.

   Supply LED Arrow Signal Modules that fit in standard incandescent vehicle traffic signal housings and meet the "ITE Vehicle Traffic Control Signal Heads Part 3: Light Emitting Diode (LED) Vehicle Traffic Signal Modules". Use Table 925-19 for all references to minimum maintained Intensity values. Ensure the LED arrow modules meet the required luminous intensity as shown in Table 925-19.

Table 925-19 Minimum Maintained Luminous Intensity Values for Arrow LED Indications

Angle					Angle				
Ver	Hor	12 inch (300 mm)			Ver	Hor	12 inch (300 mm)		
+	+ or -	Red	Yellow	Green	-	+ or -	Red	Yellow	Green
2.5	2.5	56.8	141.6	73.9	2.5	2.5	56.8	141.6	73.9
	7.5	47	117.1	61.1		7.5	47	117.1	61.1
	12.5	32.1	80.1	41.8		12.5	32.1	80.1	41.8
	17.5	18.2	45.3	23.7		17.5	18.2	45.3	23.7
	22.5	8.5	21.2	11.1		22.5	8.5	21.2	11.1
	27.5	3.3	8.2	4.3		27.5	3.3	8.2	4.3
7.5	2.5	47	117.1	61.1	7.5	2.5	47	117.1	61.1
	7.5	38.9	97	50.6		7.5	38.9	97	50.6
	12.5	26.7	66.5	34.7		12.5	26.7	66.5	34.7
	17.5	15.1	37.7	19.7		17.5	15.1	37.7	19.7
	22.5	7.1	17.7	9.2		22.5	7.1	17.7	9.2
	27.5	2.8	6.9	3.6		27.5	2.8	6.9	3.6
12.5	2.5	32.1	80.1	41.8	12.5	2.5	32.1	80.1	41.8
	7.5	26.7	66.5	34.7		7.5	26.7	66.5	34.7
	12.5	18.3	45.7	23.9		12.5	18.3	45.7	23.9
	17.5	10.5	26.1	13.6		17.5	10.5	26.1	13.6
	22.5	5.0	12.4	6.4		22.5	5.0	12.4	6.4
	27.5	-	-	-		27.5	-	-	-
17.5	2.5	18.2	45.3	23.7	17.5	2.5	18.2	45.3	23.7
	7.5	15.1	37.7	19.7		7.5	15.1	37.7	19.7
	12.5	10.5	26.1	13.6		12.5	10.5	26.1	13.6
	17.5	6.0	15.0	7.8		17.5	6.0	15.0	7.8
	22.5	2.9	7.2	3.8		22.5	2.9	7.2	3.8
	27.5	-	-	-		27.5	-	-	-
22.5	2.5	8.5	21.2	11.1	22.5	2.5	8.5	21.2	11.1
	7.5	7.1	17.7	9.2		7.5	7.1	17.7	9.2
	12.5	5.0	12.4	6.4		12.5	5.0	12.4	6.4
	17.5	2.9	7.2	2.8		17.5	2.9	7.2	2.8
	22.5	-	-	-		22.5	-	-	-
	27.5	-	-	-		27.5	-	-	-
27.5	2.5	3.3	8.2	4.3	27.5	2.5	3.3	8.2	4.3
	7.5	2.8	6.9	3.6		7.5	2.8	6.9	3.6
	12.5	-	-	-		12.5	-	-	-
	17.5	-	-	-		17.5	-	-	-
	22.5	-	-	-		22.5	-	-	-
	27.5	-	-	-		27.5	-	-	-

6. Pedestrian Signal Modules

   Supply LED Pedestrian Traffic Signal Modules that fit in standard pedestrian one section signal head manufactured in accordance with the ITE Pedestrian Traffic Control Signal Indications (PTCSI) housings and meet the ITE Pedestrian Traffic Signal Modules specification.

   Ensure that the Pedestrian Indications for the “Hand” and “Man” are filled in so as to provide a solid indication. Do not supply Pedestrian Indications for the Hand and Man that are “outlines”.

Ensure that Pedestrian Signal Modules have prominent and permanent markings to designate the proper orientation of the signal module in the pedestrian signal housing. This marking should be an up arrow or the word “UP” or “TOP”.

Ensure Pedestrian Signal Module meets the photometric requirements as indicated and described in the ITE PTCSI LED Pedestrian Traffic Signal Module Specification.

Supply Portland Orange LEDs that utilize AllnGap technology, either AS (Absorbing Substrate or TS (Transparent Substrate) and do not exhibit degradation of more than 30% of their initial light intensity following accelerated life testing (operating at 185° F (85° C) and 85% humidity, for 1000 hours). AlGaAs technology is not acceptable.

Supply White LEDs that utilize InGaN technology.

B. Fabrication

General Provisions 101 through 150.

C. Acceptance

General Provisions 101 through 150.

D. Materials Warranty

Ensure that LED traffic signal modules and LED Pedestrian modules are performance warranted to be in compliance with the minimum intensity values as shown in Table 925-19. Provide independent laboratory test results indicating that LED indications satisfy the minimum intensity Standards for LED traffic signal modules, measured at 120 V AC and 165 ºF (74 °C), for a period of five (5) years.

Ensure that the manufacturer’s name, part number, date code, and electrical characteristics of the LED signal module is visible on the assembly, and that each LED signal module is identified for warranty purposes.

925.2.16 LED Pedestrian and Countdown Signal Module

A. Requirements

This specification covers LED traffic signal module designed as a retrofit replacement for the message bearing surface of nominal 16” x 18” (400 mm x 450 MM) traffic signal housing built to the PTSCI Standard. The message bearing surface of the module consists of an overlapping “Hand” and “Man” Symbols with a numerical display of numbers from 00 to 99.

1. General Requirements

   Ensure that the unit supplied meets the applicable portions of section 925.15 of this specification.

   Ensure that the message numbers “00” to “99” are a minimum of 9 inches (228 mm) in height and consist of two rows of LEDs.

   Ensure the module fits in the Pedestrian Signal Housing without modification to the housing and requires no special tools for installation.

   Supply LED signal modules that are watertight when mounted in the traffic signal housing.

   Supply life data from the LED Signal Module manufacturer to calculate the expected useful life

   Supply modules with permanent markings for date of manufacture and date of installation.

2. Optical

   Provide test data from an independent laboratory to verify that the performance of the product meets current ITE requirements.

   Ensure that the individual LEDs are wired such that a catastrophic failure of one LED will result in the loss of not more than 5% of the signal module light output.

   The failure of a single LED in a string causes loss of light from only that LED, not the entire string or indication.

   Provide control circuitry that prevents the current flow through the LEDs in the “off” state to avoid any false indications as may be perceived by the human eye during daytime and nighttime hours.

Ensure that the LED signal module is operationally compatible with existing or new supplied conflict monitors (NEMA TS-1, NEMA TS-2, Model 210, Model 2010, ITS Cabinet CMU and AMU.

Ensure that the LED Signal Module is operationally compatible with existing or new supplied load switches.

Ensure that the intensity of the LED signal module does not vary by more than 10% over the allowable voltage range as specified in the electrical section below.

Ensure that the LED signal modules maintain not less than 90% of the required intensity, as defined by the ITE intensity Standards for LED traffic signal modules.

Ensure that each module provides an average luminous of at least 3750 candela per square meter of lighting surface for the “Hand" and 5300 candela per square meter for the Man symbol.

Ensure this over the temperature range of –40 ºF to 165 ºF (–40 ℃ to + 74 ℃) at 120 V AC, when new and after four (4) years of field installation.

Provide an exterior lens which is uniform and frosted to reduce sun phantom effect.

3. Electrical

Supply LED signal modules that operate over the temperature range of –40 ºF to 165 ºF (-40 °C to 74 ºC).

Ensure that the power factor is 90% or greater, at nominal rated voltage, at 77 ºF (25 °C), after 60 minutes of operation.

Ensure that the total harmonic distortion (THD) is less than 20% at rated voltage, at 77 ºF (25 °C) and that all LED traffic signal modules are in compliance with FCC noise regulations.

Ensure that the LED signal modules operate on line voltage, 120 V AC nominal, and are able to operate over the voltage range of 80 V AC to 135 V AC.

Provide transient voltage suppression rated at 1,500 W for 1 millisecond and fusing with a maximum rating of 2 A to minimize the effect and repair cost of an extreme over voltage situation or other failure mode.

Ensure the modules allow a reduction of the intensity of the light output in response to an input from the traffic signal controller. Ensure the minimum light output when dimmed is not less than 30% of the minimum maintained luminous intensity as defined in the applicable ITE Signal Head Module.

4. Operation

Supply LED Modules which start counting when the flashing “Don’t Walk” Indication starts and will countdown to “0” when the steady “Don’t Walk” signal turns on. Ensure that the countdown numbers remain continuously illuminated through the flashing don’t walk interval. Ensure that the unit maintains a consistent countdown during a short power failure (i.e. Traffic Controller does not restart). Ensure that if Traffic Controller restarts that the countdown timer display is turned off until one full pedestrian clearance Cycle is timed. Ensure that the unit will turn off the counter if the steady Don’t Walk Display starts while the countdown timer is displaying a number other than 00.

B. Fabrication

General Provisions 101 through 150.

C. Acceptance

General Provisions 101 through 150.

D. Materials Warranty

Ensure that LED traffic signal modules and LED Pedestrian modules are performance warranted to be in compliance with the latest ITE and CALTRANS minimum intensity Standards for LED traffic signal modules, measured at 120 V AC and 165 ºF (74 °C), for a period of five (5) years.

Ensure that the manufacturer’s name, part number, date code, and electrical characteristics of the LED signal module is visible on the assembly, and that each LED signal module is identified for warranty purposes.

925.2.17 Blank-Out Signs

A. Requirements

Ensure that each sign provides a clearly visible and definable legend for 500 feet with ample safety factors.

Provide hardware to mount the sign on standard 1.5 inch (38 mm) pipe brackets or to mount directly to signal mast arms or span wire or as outlined in the Plans.

Ensure LED blank-out signs conform to the requirements of section 925.2.15 for LED modules and optical requirements.

Supply blank-out signs capable of displaying one message at a time in one direction.

1. Case

   Use a case formed from aluminum extrusion F1-6-E and a special aluminum door frame angle.

   For Alloy 6063-T5, ensure that the wall is at least 0.075 inches thick and the corners and joints are at least 0.080 inches (2 mm) thick.

   Use filler arc for all welding. Ensure all hinges and fastening hardware, nuts, bolts, fasteners on the housing and internal components are stainless steel

   Use a BR-type take-apart door hinge and draw bolt. Furnish one P-15 1.5 inch (38 mm) hub on the top surface.

   Prime the entire case with zinc chromate, bake the inside with two coats of non-yellowing white, and paint the outside with two coats of highway yellow.

2. Electrical

   Ensure that all blank-out signs are LED and conform to current ITE Standards. Supply all signs with the necessary mounting hardware to provide for mounting as shown on the Plans. Provide mounting for one way or two way configurations.

   Obtain approval for messages and letter dimensions from the Engineer.

3. Sun Phantom Screen

   Attach to each sign a heavy-duty aluminum louver-type sun phantom screen covering the entire sign face. Slant the louvers down enough to eliminate the sun glare without obstructing the view of the sign face.

4. Painting

   Paint the signal surfaces, inside and out, with two coats of oven-baked enamel in addition to the primer coat. Paint the non-illuminated portions of the signal face black. Paint the housings, brackets, fittings, etc. highway yellow.

5. Lens

   Use a fabricated, three-section Plexiglas lens clear face, with or without legend, which can accept a silk-screened legend on the first surface. Provide a thickness of at least 0.31 inches (8 mm).

6. Legend

   Acceptable legends are as follows***:***

   Text:

   - NO LEFT TURN
   - NO RIGHT TURN
   - SIGNAL AHEAD
   - NO TURNS

   Symbols:

   - NO LEFT TURN SYMBOL
   - NO RIGHT TURN SYMBOL

B. Fabrication

General Provisions 101 through 150.

C. Acceptance

General Provisions 101 through 150.

D. Materials Warranty

Refer to Subsection 925.2.01.D for Materials Warranties.

925.2.18 Lane-Use Control Signal

A. Requirements

Ensure that all signals are LED and conform to current ITE Standards. Supply all signals with the necessary mounting hardware to provide for mounting as shown on the Plans. Provide mounting for one way or two way configurations.

1. General Requirements
   a. Weight

      Ensure that one-way units weigh not more than 50 pounds (23 kg) and two-way units weigh not more than 60 pounds (27 kg), regardless of messages.

   b. Color

      Ensure that the color of lane-use control signal indications is clearly visible for 0.25 mile (0.38 km) at all times under normal atmospheric conditions. Provide lane-use control signals with a visibility angle of a minimum of 60 degrees.

   c. Housing

      Ensure that the housing of each signal is polycarbonate or a one-piece corrosion resistant aluminum alloy die casting or equal and meets current related ASTM Specifications.

      Ensure that all configurations are balanced to provide a plumb hanging unit. Ensure that all components are readily and easily accessible from the open door.

   d. Housing door

      Ensure that the housing door is one-piece corrosion resistant aluminum or polycarbonate and meets current related ASTM Specifications.

      Provide two substantial door hinges with stainless steel hinge pins. Ensure hinges are on the left side of each section with a latch boss on the right side.

      Provide stainless steel dual eye bolt latches or similar approved devices to securely close and latch the housing door. Equip the housing or door with a continuous molded neoprene gasket to make the interior of the unit dustproof and waterproof.

   e. Wiring

      Provide each signal housing with a complete terminal board. Ensure that one side of terminal strip accommodates socket leads and the other side accommodates field wires. Ensure that the terminal board provides totally separate wiring of each symbol.

      Ensure each lamp is separately wired to a terminal block located in each housing. Provide each lamp holder socket with color-coded leads.

      For combination symbols, color-code socket leads separately to distinguish between red “X”, yellow “X” or downward arrow symbols. Provide leads that are No. 14 AWG type THW, 600 V AC, and fixture wire with 194 ºF (90 °C) thermoplastic insulation.

   f. Visors

      Provide visors not less than 12 inches (300 mm) long for multiple unit and 7 inches (175 mm) long for single unit signals for each signal face.

      Ensure that the visors are constructed of sheet aluminum or polycarbonate and encompass the top and sides of each section.

   g. Painting

Paint all signal surfaces, inside and out, with two coats of oven baked enamel in addition to the primer coat. Paint the insides of the visors flat black.

The non-illuminated portions of the signal face black or dark gray and all housings, brackets and fittings highway yellow.

h. Hardware and fittings:

Supply all necessary fittings, pipe brackets, hangers, hubs, etc. for the type of mounting specified. Ensure all fittings are aluminum or galvanized coated to prevent rust and corrosion.

i. Sun -phantom screen

Provide each signal face with a screen, which substantially counteracts sun phantom effect.

2. Signal Display

Ensure that the symbols, which are on an opaque black or dark gray background, meet ITE requirements and are blacked out when not illuminated.

3. LED Optical System

a. Ensure that the LEDs supplied for the lane use control signal meet the Specifications for a type module as required in section 925.2.14. Ensure that each separate color indication in a sign face is illuminated by independent LEDs

b. Ensure that the green arrow indication does not utilize the same termination points as any “X" indication.

c. Ensure that total power required for any single indication does not exceed 250 W.

d. Ensure that all modules are contained behind a water tight signal face or lens assembly.

e. Ensure that the entire optical system is weatherproof and is not vulnerable to extremes in temperature or moisture.

B. Fabrication

General Provisions 101 through 150.

C. Acceptance

General Provisions 101 through 150.

D. Materials Warranty

Refer to Subsection 925.2.01.D for Materials Warranties.

925.2.19 Pedestrian Push Button Station

A. Requirements

Ensure that Pedestrian push buttons are of tamperproof construction and consist of a direct push type button and single momentary contact switch in cast aluminum housing. The pushbutton cover shall also be of cast aluminum. The housing and cover shall be free of voids, pits, dents, molding sand excessive foundry grinding marks. Exterior surface shall be smooth and cosmetically acceptable, free of molding fins, cracks and other exterior blemishes.

Provide housing and cover with an alodine conversion coating so as to provide a proper base for paint adhesion. Finish the housing with baked enamel and paint the push button housing and Pedestrian heads highway yellow (unless otherwise specified by the Engineer).

The assembly shall be capable of being mounted to a flat or curved surface. Ensure the assembly includes the appropriate sign as shown in the Plan Details.

Ensure that any screws or bolts are stainless steel and vandal proof. Provide the unit with a 0.5 inch (13 mm) threaded opening with plug.

Ensure that the assembly is weatherproof and so constructed that when properly installed, it will be impossible to receive an electrical shock under any weather condition.

Ensure that Pedestrian Pushbuttons are integrated with a sign as shown in the standard details. Provide the sign size as indicated on the Plans. GDOT will allow an adapter of cast aluminum. GDOT will allow one of three options:

1. The use of a 9 inch (229 mm) by 15 inch (381 mm) cast aluminum plate adapter to upgrade existing push button station, 9 inch (229 mm) by 12 inch (305 mm).
2. Push button station assembly 9 inch (229 mm) by 15 inch (381 mm) sign w/round pushbutton adapter.
3. The use of a 9 inch (229 mm) by 15 inch (381 mm) cast aluminum plate adapter to upgrade existing push button station, 5 inch (127 mm) by 7 inch (178 mm).

Ensure that the Pedestrian Push Button sign adapter plate is, die-cast aluminum and separate, such that it is interchangeable.

Ensure that the Pedestrian Push Button sign adapter assembly be, die-cast aluminum and attached, prior to shipping.

The plate shall be finished with highway yellow baked enamel paint (unless otherwise specified by the Engineer).

Ensure the button assembly is configured to be a mechanical switch with ball and 2 inch (50 mm) mushroom plunger.

B. Fabrication

General Provisions 101 through 150.

C. Acceptance

General Provisions 101 through 150.

D. Materials Warranty

Refer to Subsection 925.2.01D for Materials Warranties.

925.2.20 Signal Head Back Plate

A. Requirements

Ensure that each back plate is designed to properly shield a traffic signal head from background distractions for better visibility.

Design the back plates to extend beyond the signal head to a minimum of 6 inches (150 mm) on all sides and have all corners rounded with minimum 2 inch (50 mm) radii.

Construct the back plates from~~,~~ UV stabilized polycarbonate or, ABS plastic material with a finished color of flat black. Ensure that polycarbonate back plates are at least 0.15 inches (4 mm) thick; ABS back plates are at least 0.05 inches (1 mm) thick.

Design the back plates with predrilled holes to provide for simple attachment to the specified brand, size and configuration of traffic signal head with all mounting hardware included.

Ensure that the back plates do not interfere with the signal mounting hardware. Ensure that the back plates include louvers.

Ensure back plates project a rectangular appearance at night by having a 1 inch (25 mm) yellow retroreflective strip along the back plate perimeter.

B. Fabrication

General Provisions 101 through 150.

C. Acceptance

General Provisions 101 through 150.

D. Materials Warranty

Refer to Subsection 925.2.01.D for Materials Warranties.

925.2.21 Signal Head Visors

A. Requirements

Typically, visors are one piece tunnel type and removable unless specified otherwise in the signal Plans.

Ensure that visors are polycarbonate and at least 9 inches (225 mm) deep for 12 inch (300 mm) heads. Special angle visors are full circle with the long side at least 18 inches (450 mm) deep. Ensure that visors provide a positive method of attaching to the door of the signal head that do not allow rotation. An acceptable method is to provide tabs that use stainless steel screws.

Unless otherwise specified by the Engineer, provide black signal head visors.

If special tools are required for visor adjustment, provide one set per project. Coordinate delivery of tools with District Signal Engineer.

B. Fabrication

General Provisions 101 through 150.

C. Acceptance

General Provisions 101 through 150.

D. Materials Warranty

Refer to Subsection 925.2.01.D for Materials Warranties.

925.2.22 Signal Head Louvers

A. Requirements

Ensure that louvers (with the vanes oriented vertically) are directional with a 7-degree cutoff right of center. Rotating the louver 180 degrees will produce a 7-degree cutoff left of center.

Provide twelve-inch (300 mm) louvers with 5 vanes. Finish all louvered surfaces in flat black. Ensure that programmable louvers are directional with a 7-degree cutoff and that all louver surfaces have a flat black finish.

Ensure that the units can be installed and programmed in accordance with the manufacturer's instruction on visors that are recommended by the manufacturer.

Have the programmable louver display approved by the Engineer prior to placing the signal in stop and go operation.

If special tools are required for louver adjustment, provide one set per project. Coordinate delivery of tools with District Signal Engineer.

B. Fabrication

General Provisions 101 through 150.

C. Acceptance

General Provisions 101 through 150.

D. Materials Warranty

Refer to Subsection 925.2.01.D for Materials Warranties.

925.2.23 Hardware For Mast Arm Mounting

A. Requirements

Ensure that signal heads are rigidly mounted to the mast arm. Provide mounting hardware that is in accordance with the following:

1. Adjustability

   Ensure the mounting bracket is completely adjustable such that it allows; rotational adjustment about the bracket axis; vertical adjustment; rotational adjustment about the Mast Arm; and rotational adjustment from the vertical plane.

2. Attachment

   Ensure the bracket is provided with air-craft grade galvanized steel cables with stainless steel fastening hardware and make a minimum of two wraps around to fasten the bracket to the arm. Ensure the bracket is easily adjustable to fit all sizes of round, elliptical or other shaped structure without special tools or equipment.

3. Signal/Sign Accommodations

   Ensure the bracket attaches to the signal or sign to assure maximum rigidity. When clamping the signal top and bottom, ensure a standard bracket accommodates all major signal manufacturers signal for 3, 4 and 5 section signal head configurations.

4. Wiring

   All electrical wiring shall be completely concealed with the bracket. The vertical support shall be a gusseted "C" shaped extruded aluminum tube to accommodate the signal cable regardless of vertical positioning of the tube.

5. Materials

   The upper and lower arms shall be cast 319 aluminum or equivalent. The lower arm shall be internally threaded to accommodate the threaded vertical support tube. Ensure the lower arm is furnished with plastic covers which slide and snap into place. Both arms shall have 72 tooth serrations cast into the arm to assure a positive lock with signal housing and shall be secured about their rotational axis with setscrews. Ensure the arms have a tri-bolt arrangement for attachment to the signal housing.

   Ensure the vertical support is gusseted tube extruded from 6063-T6 aluminum. Ensure the tube includes a vinyl closure strip.

   Ensure the mast arm clamp assembly is cast from 713 aluminum alloy or equivalent. Provide an assembly that allows for 360 degrees of rotation with no internal bracing obstructing the center opening. Provide two air-craft grade galvanized steel cables that have minimum tensile strength of 100,000 PSI (690 MPa).

   Ensure that each bracket is complete with all necessary bolt, washers, gaskets and miscellaneous items to allow assembly of the signal to the bracket and the bracket to the mast arm. Ensure all aluminum parts have an Aldine finish. All non stainless steel parts shall have a yellow zinc di-chromate or galvanize finish.

This item will be approved upon submittal of catalog cuts. Refer to Standard Detail Drawings for additional information.

B. Fabrication

General Provisions 101 through 150.

C. Acceptance

General Provisions 101 through 150.

D. Materials Warranty

Refer to Subsection 925.2.01D for Materials Warranties.

925.2.24 Hardware For Signal Head Pole Mounting

A. Requirements

Ensure this item consists of hardware adequate for the specific mounting. As a minimum provide the following hardware. 1 ½ inch pipe nipples of die cast aluminum that are a minimum of 12 inches (300 mm) and threaded with 1 ½ inch NPS threads on either end. On the upper and lower arm there shall be a serrated 72 tooth boss with set screw. Use a tri-stud adaptor to attach the signal housing to the mounting hardware. The upper arm shall have a neoprene gasket to provide weather tight fit. Hub plates for pole mounting shall be provided and they shall be appropriate for the particular mounting (round or flat). Hardware shall die cast aluminum alloy 380 or extruded. All die cast parts shall be cleaned in an alkaline cleaning compound Extruded parts shall have an alodine conversion coating to provide proper base for paint adhesion. The assembly is to be painted federal yellow and baked in an oven. Ensure the assembly is provided with all required hardware. All other hardware shall be stainless steel.

B. Fabrication

General Provisions 101 through 150.

C. Acceptance

Ensure that this item consists of hardware as shown in the standard details.

This item will be approved upon submittal of catalog cuts.

D. Materials Warranty

Refer to Subsection 925.2.01.D for Materials Warranties.

925.2.25 Balance Adjuster

A. Requirements

Ensure this item consists of hardware that is cast from 316 Stainless Steel or 65-45-12 Ductile Iron or equivalent. Ensure castings are free of voids, pits, dents, molding sand and excessive grinding marks. Exterior surface shall be cosmetically acceptable and free of molding fins, cracks and other exterior blemishes. All hardware shall be supplied and be stainless steel or galvanized.

B. Fabrication

General Provisions 101 through 150.

C. Acceptance

Ensure this item consists of hardware as shown in the Standard Details. This item will be approved upon submittal of catalog cuts.

D. Materials Warranty

Refer to Subsection 925.2.01.D for Materials Warranties.

925.2.26 Hardware For Mounting Pedestrian Head

A. Requirements

Ensure this item meets the same criteria as 925.2.24.A and is in accordance with the Standard Details.

B. Fabrication

General Provisions 101 through 150.

C. Acceptance

Ensure this item consists of hardware as shown in the Standard Details. This item will be approved upon submittal of catalog cuts.

D. Materials Warranty

Refer to Subsection 925.2.01.D for Materials Warranties.

925.2.27 Pedestal Pole

A. Requirements

The Pedestal poles support vehicle signal heads, pedestrian signal heads, IVDS and push button. Furnish Pedestal poles according to type and overall length.

Pedestal pole for vehicle display for one lane ramp metering operation shall be constructed to support one 12” (300 mm) signal head and one 8” (200 mm) signal head assembly as shown in the Plans.

Pedestal pole for ramp meter advance warning sign and flashing beacon shall be constructed to meet the sign manufacturer’s structural requirements. Pedestal pole mounting adapter shall rigidly attach to the sign case’s structural bracing. Cable entrance to the sign case shall be through the inside of the pole.

1. Ensure that all poles are made of one continuous piece of bare finish spun aluminum from top to base connection for the entire height of the pole.

   The shaft, of appropriate shape, may or may not be uniformly tapered from butt to tip. A pole used to support only a traffic signal may be tapered.
2. Fabricate pole caps, when required, of cast material, and secure in place with set-screws.

B. Fabrication

General Provisions 101 through 150.

C. Acceptance

General Provisions 101 through 150.

D. Materials Warranty

Refer to Subsection 925.2.01.D for Materials Warranties.

925.2.28 Pedestal Pole Base

A. Requirements

Ensure that all design radii are smooth and intact. Ensure that the exterior surface finish is smooth and cosmetically acceptable by being free of molding fins, cracks and other exterior blemishes.

Fabricate from new aluminum ingot. Do not use scrap materials.

Minimum requirements are as follows:

ALUMINUM ALLOY NO.	319
ELONGATION [% IN 2 IN. (50 mm)]	2.5
TENSILE STRENGTH, KSI (MPa)	34 (234)
BRINELL HARDNESS	85
YEILD STRENGTH, KSI (MPa)	19 (131)
SHEAR STRENGTH, KSI (MPa)	232 (1600)

1. Ensure this item consists of square cast aluminum with bare finish, and has a minimum weight of 21 pounds (9.5 kg). Thread the upper end to receive a 4 inch (100 mm) National Pipe Thread (NPT) pipe shaft.
2. Design the base so that it may be fastened to a foundation with four (4) 0.75 inch (19 mm) anchor bolts located 90 degrees apart on the bottom of the base. Provide slots in the bottom of the base 1.5 inch (38 mm) wide and 2.5 inches (63 mm) long measured along the circumference of the bolt circle, allowing a proper fit even if the bolts are placed slightly off center.
3. Design the base to accommodate bolt circles of a minimum of 12 inches (300 mm) through a maximum of 14.5 inches (363 mm) and anchor bolts with a minimum of 0.63 inches (16 mm) through 1 inch (25 mm) diameter.
4. Design the base with a removable plastic door. Ensure that the door opening is free of burrs and sharp edges and is no less that 8.5 inches (213 mm) square. Attach the door to the base using one socket button head screw to prevent unauthorized entry.
5. Ensure that the base meets or exceeds current AASHTO breakaway requirements. Provide test reports from an FHWA approved independent laboratory certifying that the base has been tested and meets all applicable requirements. In addition, supply a statement of certification from the FHWA stating such tests have been accepted and approved.
6. In order to prove structural soundness, provide a certification from a recognized independent structural laboratory certifying that the base will withstand a bending moment of 10,750 ft-lbs (14 575 N-m).
7. Ensure that the door is injection molded from ABS plastic to deter vandalism and theft, and has the following properties:

TEST	ASTM METHOD	VALUE
Tensile @ Yield [0.13 inches (3 mm)]	D638	6600 psi (45 500 kPa)
Flexural @ Yield	D790	11,000 psi (75 850 kPa)
Rockwell Hardness	D785	101 (R Scale)
Notched Izod	D256	5 ft-lb./in. (0.03 N-m/mm)

8. Ensure that the door exhibits the following properties:
   - Has an edge thickness of 0.25 inches (6 mm) and a minimum thickness of 0.156 inches (4 mm)
   - Contains flame-retardant material, meeting or exceeding underwriters laboratories UL 94 test H.B
   - Gray aluminum tone in color, unless otherwise specified
   - Contains ultra-violet inhibitors and stabilizers for protection against UV degradation
   - Is injection molded with a smooth front finish
   - Has flat and straight surfaces without blisters, buckling or warping; have reinforcing ribs
   - Contains two (2) injection molded lugs on the bottom of the door with slots of the proper width and depth to fit the base door opening.
9. Supply the base with a set of four (4) anchor bolts, 0.75 inch (19 mm) diameter by 18 inches (450 mm) in length, material per ASTM A 572A 572M, Galvanized per ASTM A 153/A 153M. Supply (1) hex nut and (1) flat washer with each bolt.

B. Fabrication

General Provisions 101 through 150.

C. Acceptance

General Provisions 101 through 150.

D. Materials Warranty

General Provisions 101 through 150.

925.2.29 Pedestal Pole Foundation Anchor Assembly

A. Requirements

Provide Foundation Anchor assembly that is 4 inches (100 mm) in diameter by 56 inches (1400 mm) with a single helical blade and a square fixed baseplate with combination underside holt-head retainer and dirt scrappers allowing flush-mount with the ground.

Provide Baseplate that is steel and conforms to ASTM A-36 material. Provide pipe with helical blade that is manufactured from ASTM A-53ERW Grade B Steel. Ensure 4 inch pipe has 2 inch (50 mm) by 3 inch (75mm) entrance hole 18 inches below the steel plate. Ensure the anchor assembly is hot dipped galvanized finish after fabrication and complies with ASTM A-123.

Ensure base plate has four slotted mounting holes to fit bolt circles from 7 ¾ inch (195mm) to 14 ¾ inch (375 mm. Provide 4 slotted mounting hole with a ¾ inch keyhole slot to permit bolt installation and replacement from the top surface without digging under the baseplate.

Ensure assembly is furnished with:

- Quantity of four ¾ inch(20 mm) -10NC x 3 inch(75 mm) square head galvanized ASTM 325 anchor bolts;
- Quantity of four ¾ inch(20 mm) plain flat galvanized washers;
- Quantity of four 3/16 inch(5 mm) thick galvanized plate washers;
- And, quantity of four ¾ inch (20 mm) galvanized hex nuts.

B. Fabrication

General Provisions 101 through 150.

C. Acceptance

General Provisions 101 through 150.

D. Materials Warranty

Refer to Subsection 925.2.01.D for Materials Warranties.

925.2.30 Timber Poles

A. Requirements

Ensure that all timber poles meet the requirements of Section 861. Poles must be inspected and tested by the GDOT Office of Materials and hammer stamped by the inspector.

Ensure that all poles have a brand or stamp 10 feet (3 m) from the butt that notes the type wood, date of manufacture, manufacturer, class and length.

Ensure that all timber poles that have guy attachments or support span wire or arms that suspend signal heads over the roadway or sidewalk are Class II.

Poles that support loop lead-in, messenger or communications cable that does not have guy attachments may be Class IV size.

Ensure that all poles meet the requirements in the table below unless otherwise noted on the traffic signal Plans or list of materials.

Class	Nominal Length, ft (m)	Minimum Circumference At 6 feet (2.4 m) from butt, in. (mm)
II	30 (9)	34.0 (850)
II	35 (10.5)	36.5 (913)
II	40 (12)	38.5 (963)
II	45 (13.5)	40.5 (1013)
II	50 (15)	42.0 (1050)
IV	30 (9)	29.5 (738)
IV	35 (10.5)	31.5 (788)
IV	40 (12)	33.5 (838)
IV	45 (13.5)	35.0 (875)

B. Fabrication

General Provisions 101 through 150.

C. Acceptance

General Provisions 101 through 150.

D. Materials Warranty

Refer to Subsection 925.2.01.D for Materials Warranties.

925.2.31 Traffic Signal Pull Box

A. Requirements

Ensure traffic signal pull boxes are matched assemblies consisting of boxes and covers from the same manufacturer.

For all pull boxes except Types 4 and 5, use pull boxes manufactured in a single unit for the full depth required in the size in an open bottom configuration. Do not use stacked pull boxes.

For pull boxes Types 4 and 5, use stacked pull boxes as shown in the Plans, where the top unit is open bottom and the bottom unit is closed bottom manufacture. In the bottom unit provide a drain hole.

Provide pull boxes that are non-metalic and gray or tan color.

Ensure that pull boxes meet all requirements of ANSI 77 2007 or current edition Tier 15. Provide compliance test documentation.

Provide a ¼-inch (6 mm) galvanized wire mesh between the gravel base and the open bottom box or closed bottom box drain hole for all pull box types.

Use Type 1 pull boxes [12 inches x 12 inches (300 mm x 300 mm)] for loop lead-ins. When loop lead-ins and splices and other cables are required, use Type 2 pull boxes [11 inches x 18 inches (275 mm x 450 mm)] or Type 3 pull boxes [17 inches x 30 inches (425 mm x 750 mm)]. Use Type 4, 4S, 5, 5S, 6 and 7 pull boxes for fiber optic cable. Furnish one-piece covers for all pull boxes except Types 5, 5S, and 7. Furnish two-piece covers for Types 5, 5S, and 7.

Furnish covers with a skid-resistant surface with a minimum coefficient of friction of 0.5 when tested in accordance with ASTM C1028.

Furnish covers with stainless steel hold-down bolts, minimum size 3/8-16.

Furnish covers with the logo “TRAFFIC SIGNAL” for pull box Types 1, 2 and 3, and with other pull box types when installed for traffic signal cabling at a traffic signal.

Unless otherwise shown in the Plans or installed for traffic signal cabling at a traffic signal, furnish covers with the logo "GDOT COMMUNICATIONS" for pull box Types 4, 4S, 5, 5S, 6 and 7.

Furnish pull box Types 4, 5, 6 and 7 with factory-installed cable racks and rack hooks.

Cable racks and rack hooks shall be hot-dipped galvanized steel.

Each cable rack rail shall be minimum 24 inches (600 mm) in length with rack hook mounting holes on the entire length. Install two racks on each of the pull box long side walls. For Type 4 and 5 pull boxes only, each cable rack rail may be comprised of two minimum 12 inch (300 mm) units installed on the stacked box side walls.

Mount cable racks to the side walls using minimum 3/8-16 stainless steel hardware.

Furnish a minimum of four rack hooks, minimum 6 inch length (150 mm), per pull box. Furnish an additional four rack hooks for each through cable stored in the pull box. Furnish an additional two rack hooks for each splice closure stored in the pull box.

Furnish Types 6 and 7 pull boxes with factory-installed non-metallic conduit terminators for Sch. 40 and SDR11 2-inch (53 mm) of the quantity and location as shown in the Plans, or for a different conduit size if shown in the Plans. Terminator bodies shall be manufactured from high-impact polystyrene or approved equivalent.

When joining conduits of dissimilar materials, furnish an airtight and watertight conduit adhesive intended for direct-contact underground use.

Refer to the Standard Detail Drawings and the Traffic Signal Design Manual for further information.

B. Fabrication

General Provisions 101 through 150.

C. Acceptance

General Provisions 101 through 150.

D. Materials Warranty

Refer to Subsection 925.2.01.D for Materials Warranties.

925.2.32 Prefabricated Controller Cabinet Base

A. Requirements

Provide controller cabinet bases that are precast polymer concrete and grey in color. Ensure the prefabricated controller cabinet base has the correct bolt pattern for the cabinet(s) to be installed. Provide prefabricated controller cabinet bases with UNC inserts as shown on plans. UNC inserts shall be stainless steel and be designed for a minimum of 15 foot-pounds (20 N-m) of torque.

Ensure that prefabricated controller cabinet bases are designed to withstand wind loading of 125 mph (200 km/h) with the cabinets as shown in the Plans mounted. Ensure that prefabricated controller cabinet bases are designed for a minimum static vertical load of 5,000 pounds (2262 kg)over a 10 inch (254 mm) by 10 inch (254 mm) by 1 inch (25 mm) thick distribution plate and withstand a tested load of 7,500 pounds (3394 kg). Ensure that prefabricated controller cabinet bases are designed for a minimum lateral load of 1800 pounds (814 kg) over an 18 inch (457 mm) by 24 inch (610 mm) by 1 inch (25 mm) steel plate applied to the longest side and shall withstand a tested load of 2700 pounds (1222 kg). The prefabricated controller cabinet base shall withstand a 50 foot-pound impact administered with a 12-pound weight having a "C" tup without puncture or splitting, in accordance with ASTM D2444. The prefabricated controller cabinet base shall meet the requirement of ASTM D543 Section 7, Procedure 1. Provide a copy of all test reports from a certified lab along with the materials certification package.

B. Fabrication

General Provisions 101 through 150.

C. Acceptance

General Provisions 101 through 150.

D. Materials Warranty

Refer to Subsection 925.2.01.D for Materials Warranties.

925.2.33 Loop Lead-In Cable

A. Requirements

Ensure that loop detector lead-in cable is No. 18 AWG, 3-pair shielded cable that meets IMSA specification #50-2.

Ensure that identification markings are stamped on the jacket.

B. Fabrication

General Provisions 101 through 150.

C. Acceptance

General Provisions 101 through 150.

D. Materials Warranty

Refer to Subsection 925.2.01.D for Materials Warranties.

925.2.34 Loop Detector Wire

A. Requirements

Ensure that loop detector wire, meets IMSA specification 51- -3 and is 14 AWG.

For special applications loop detection wire that meets IMSA specification 51-7, 14 AWG, may be used as directed by the Engineer.

Stamp identification markings on the cable jacket.

B. Fabrication

General Provisions 101 through 150.

C. Acceptance

General Provisions 101 through 150.

D. Materials Warranty

Refer to Subsection 925.2.01.D for Materials Warranties.

925.2.35 Aerial & Duct Signal Cable

A. Requirements

Ensure that aerial or duct (conduit) No. 14 AWG, stranded, 7-conductor, with black polyethylene (PE) jacket and 600 V AC rating meets IMSA specification #20-1. Use conductors that are straight, not twisted pairs.

B. Fabrication

General Provisions 101 through 150.

C. Acceptance

General Provisions 101 through 150.

D. Materials Warranty

Refer to Subsection 925.2.01.D for Materials Warranties.

925.2.36 Self-Supporting Twisted Pair Aerial Signal Communications Cable

A. Requirements

Ensure that self-supporting, figure eight, aerial signal communications cable, No. 19 AWG, stranded 6-pair conductors is rated at 600 V AC and meet IMSA specification #20-4-1984.

Use conductors that are twisted pairs with copper tape shield under a black PE jacket. Ensure that messenger strand is 0.25 inch (6 mm), 7-strand and conforms to ASTM A 475 Siemens-Martin grade or better with a Class A coating.

B. Fabrication

General Provisions 101 through 150.

C. Acceptance

General Provisions 101 through 150.

D. Materials Warranty

Refer to Subsection 925.2.01.D for Materials Warranties.

925.2.37 Underground Feeder Cable, Type UF

A. Requirements

Ensure that underground feeder cable, Type UF w/ground has two (2) conductors with pvc/nylon jacket and a minimum 600 V AC rating per UL #493. Two-conductor, No. 6 AWG wire may be used.

B. Fabrication

General Provisions 101 through 150.

C. Acceptance

General Provisions 101 through 150.

D. Materials Warranty

Refer to Subsection 925.2.01.D for Materials Warranties.

925.2.38 Messenger & Guy Strand (Span Wire)

A. Requirements

Ensure that all messenger and guy strand (span wire) conforms to ASTM A 475 Extra High Strength grade or better with a Class A coating, 7-wire span wire.

Ensure ¼-inch (6 mm) Messenger & guy strand shall be used to support interconnect cable or as tether spans.

Messenger & guy strand 0.31 inch (7 mm) shall be used only where it is essential to match an existing 0.31inch (7 mm) span wire that will not be replaced as part of a new installation.

Ensure all span wire for signal heads, blank out sign, optically programmed heads, lane control signs, standard, aerial or sidewalk guys uses a minimum Messenger & guy strand 0.38 inch (9 mm) as a minimum size.

B. Fabrication

General Provisions 101 through 150.

C. Acceptance

General Provisions 101 through 150.

D. Materials Warranty

Refer to Subsection 925.2.01.D for Materials Warranties.

925.2.39 Power Disconnect Box

A. Requirements

Ensure that all power disconnect boxes are NEMA 3R 240 V AC, 60 Amp Phase 1(metal non-fused 2 pole). Ensure the disconnect box is supplied with a padlock keyed as per directions of District Signal Engineer. Provide power disconnect box that is not fused and does not have a circuit breaker. Supply with a service grounding kit.

B. Fabrication

General Provisions 101 through 150.

C. Acceptance

General Provisions 101 through 150.

D. Materials Warranty

Refer to Subsection 925.2.01.D for Materials Warranties.

925.2.40 Cable Ties

A. Requirements

Ensure that all cable ties are nylon, ultraviolet resistant black and consist of the following as a minimum:

Nominal Length	**8 inches (200 mm)**
Width	**0.30 inches (7 mm)**
Tensile Strength	**120 pounds (55 kg)**

B. Fabrication

General Provisions 101 through 150.

C. Acceptance

General Provisions 101 through 150.

D. Materials Warranty

Refer to Subsection 925.2.01.D for Materials Warranties.

925.2.41 Lashing Rod

A. RequirementsEnsure that all lashing rods are sized in accordance with messenger and cable(s) diameters to be supported. Provide lashing rods that are of the same material as the messenger or guy strand.

B. Fabrication

General Provisions 101 through 150.

C. Acceptance

General Provisions 101 through 150.

D. Materials Warranty

Refer to Subsection 925.2.01.D for Materials Warranties.

925.2.42 Stainless Steel Lashing Wire

A. Requirements

Provide lashing wire that is type 316 stainless steel with 0.045 inch (1 mm) diameter.

B. Fabrication

General Provisions 101 through 150.

C. Acceptance

General Provisions 101 through 150.

D. Materials Warranty

Refer to Subsection 925.2.01.D for Materials Warranties.

925.2.43 Guy Guards

A. Requirements

Ensure that all guy guards are high impact resistant PVC with ultraviolet stabilizers added for retention of color. Ensure that insulators attach to the guy so that they cannot easily be removed. Use guy guards which are yellow unless otherwise directed.

B. Fabrication

General Provisions 101 through 150.

C. Acceptance

General Provisions 101 through 150.

D. Materials Warranty

Refer to Subsection 925.2.01.D for Materials Warranties.

925.2.44 Guy Strain Insulators

A. Requirements

Ensure guy strain insulators are protected from the environment including the effects of voltage, ultraviolet rays, and acid rain by a fully bonded, electrically tack-free, and impenetrable silicone rubber sheath. Each insulator shall be UL proof tested, and permanently marked to show date of test.

B. Fabrication

General Provisions 101 through 150.

C. Acceptance

General Provisions 101 through 150.

D. Materials Warranty

Refer to Subsection 925.2.01.D for Materials Warranties.

925.2.45 Universal Closure Kit

A. Requirements

Supply a Universal Signal Closure Kit to seal the signal head at either the top or bottom. Ensure that the kit will fit any manufacturer's signal head (top or bottom) without the use of special tools or modification.

1. Ensure that the gasket is 60-70 durometer neoprene.
2. Ensure that Closure Cap is injection molded ABS plastic. The plastic is to be loaded with UV stabilizers.
3. Ensure that Adapter Bar is made so that it will secure the closure cap and compensate for varying thickness of signal heads.
4. Provide two # 10 (9mm) screws to fit any manufacturer's signal head. Ensure that one screw is 0.75 inches (19 mm) in length and the second screw is 1 inch (25 mm) in length.
5. Pack each assembly in a clear plastic bag. Mark the bag with the manufacturer's name and part number. Include the Universal Signal Closure Kit in a package containing the span wire clamp and Tri-Stud wire entrance fitting.
6. Ensure that the Closure Cap is molded to closely match the color of the signal head (Federal Yellow). The adapter bar and screws are to be zinc plated steel.

B. Fabrication

General Provisions 101 through 150.

C. Acceptance

General Provisions 101 through 150.

D. Materials Warranty

Refer to Subsection 925.2.01.D for Materials Warranties.

925.2.46 Cast Aluminum Span Wire Clamp

A. Requirements

Provide Span Wire Clamps that are cast from Aluminum Alloy 713 or equivalent, free of voids, pits, dents, molding sand and excessive foundry grinding marks. Ensure that all design radii are smooth and intact.

Provide an exterior surface finish that is smooth and cosmetically acceptable, free of molding fins, cracks and other exterior blemishes. Ensure that span wire clamps are fabricated from aluminum ingot with minimum requirements as follows:

- ALUMINUM ALLOY No. 713
- YIELD STRENGTH, ksi (MPa) 25 (172)
- TENSILE STRENGTH, ksi (MPa) 35 (240)
- BRINELL HARDNESS 75
- ELONGATING [% in 2 inches (50 mm)] 3

1. Ensure that the Span Wire Clamp can accommodate cables 0.25 inch (6 mm) to 0.63 inch (16 mm) diameter.
2. Ensure that the weight is less than 1.75 pounds (0.8 kg) with hardware.
3. Ensure that the Span Wire Clamp have a minimum overall length of 7 inches (175 mm).
4. Ensure that the Span Wire Clamp have a centerline dimension from cable to clevis pin of 2 inches (50 mm) [+/- 0.5 inches (13 mm)].
5. Ensure that the Span Wire Clamp have a cast aluminum cable bar to protect the cable when tightening the U-bolts.
6. Ensure that the Span Wire Clamp have a mounting opening of 0.75 inches (19 mm) [+/- 0.03 inches (0.8 mm)].
7. Ensure that the Span Wire Clamp have 0.5 inch (13 mm) - 13 NPT U-bolts with 0.5 inch (13 mm) lock washers and nuts.
8. Ensure that the clevis pin are 0.63 inch (16 mm) diameter with a length of 2.25 inches (56 mm) and secured with a hump back stainless steel cotter pin.
9. Ensure that the Clamp and Cable Bar have an Alodine 1200 conversion coating to help resists oxidation.
10. Ensure that the Clevis Pin and hardware are galvanized per ASTM 123/A 123M or stainless steel.

B. Fabrication

General Provisions 101 through 150.

C. Acceptance

General Provisions 101 through 150.

D. Materials Warranty

Refer to Subsection 925.2.01.D for Materials Warranties.

925.2.47 Cast Aluminum Tri-Stud Span Wire Entrance Fitting

A. Requirements

Ensure that the Tri-Stud Span Wire Entrance Fittings are cast from Aluminum Alloy 713 or equivalent, free of voids, pits, dents, molding sand and excessive foundry grinding marks.

Ensure that the all design radii are smooth and intact. Ensure that the exterior surface finish is smooth and cosmetically acceptable, free of molding fin, cracks and other exterior blemishes.

Ensure that the material is fabricated from aluminum ingot with minimum requirements as follows:

- ALUMINUM ALLOY No. 713
- YIELD STRENGTH, ksi (MPa) 25 (172)
- TENSILE STRENGTH, ksi (MPa) 35 (240)
- BRINELL HARDNESS 75
- ELONGATION [% in 2 inches (50 mm)] 3

1. Ensure that the Tri-Stud Span Wire Entrance fitting has a mounting support at the top of the wire entrance 0.69 inches (17 mm) thick [+/- 0.07 inches (1.5 mm)].
2. Ensure that the Tri-Stud Span Wire Entrance fitting weight is not less than 1.75 pounds (0.8 kg) with hardware.
3. Ensure that the mounting support has at least six (6) clevis openings for adjustment with suspension bracing between every two (2) openings.
4. Ensure that the Tri-Stud Span Wire Entrance has a minimum of 0.5 inch (13 mm) diameter throughout for wire access and that wire access is free of burrs and casting webs.
5. Ensure that the Wire Entrance opening is recessed and has a neoprene grommet with sealed membrane sections.
6. Ensure that the signal head attachment end is serrated and has a minimum of 3-signal head centering bosses extending 0.19 inches (5 mm) from the serrations.

7. Ensure that the serrations have a 72-tooth design to match the signal head.
8. Ensure that three (3) stainless steel studs are cast into the wire entrance fitting. Ensure that the studs are 0.31 inches (7 mm) and extend 1.5 inches (38 mm) [+/- 0.13 inches (4 mm)] beyond the serrations. Provide each Tri-Stud span wire entrance fitting with a Tri-Stud hardware kit.
9. Ensure that the Tri-Stud Span Wire Entrance Fitting has an alodine conversion coating to provide a proper base for paint adhesion. Ensure that the assembly matches display housing (per plans) and baked in a drying oven after painting.
10. Ensure that the all Hardware is galvanized or stainless steel.

B. Fabrication

General Provisions 101 through 150.

C. Acceptance

General Provisions 101 through 150.

D. Materials Warranty

Refer to Subsection 925.2.01.D for Materials Warranties.

925.2.48 Bull Rings

A. Requirements

Provide bull rings that are galvanized weldless steel 0.63 inch (16 mm) diameter. Submit catalog cuts for approval.

B. Fabrication

General Provisions 101 through 150.

C. Acceptance

General Provisions 101 through 150.

D. Materials Warranty

Refer to Subsection 925.2.01.D for Materials Warranties.

925.2.49 Ramp Meter Enforcement Device

A. Requirements

For each metered lane, provide one ramp meter enforcement device mounted on the back of one signal per lane and wired directly to the red signal display, (Refer to 647.3.05.L). This installation shall include a Red 44 LED Array (allnGaP), Pixel housing, 6061 aluminum powder coated swivel bracket, 2 inch lens, with an aluminum hood. Mounted and adjusted as per the Plans.

B. Fabrication

General Provisions 101 through 150.

C. Acceptance

General Provisions 101 through 150.

D. Materials Warranty

Refer to Subsection 925.2.01.D for Materials Warranties.

925.2.50 Vinyl Electrical Tape

A. Requirements

Ensure electrical tape used is flame retardant, cold and weather resistant. Provide tape that is rated for 600 volts and for use between 0 F (-18 C) and 176 F (80 C).

Ensure tape is 0.0085 inches (0.2 mm) thick and meets the requirements of UL 510 and Mil-I-24391. Provide tape that remains flexible with abrasion resistance.

B. Fabrication

General Provisions 101 through 150.

C. Acceptance

General Provisions 101 through 150.

D. Materials Warranty

Refer to Subsection 925.2.01.D for Materials Warranties.

Section 926—Wireless Communications Equipment

926.1 General Description

This section provides specifications for a variety of wireless communications equipment. This work consists of furnishing materials and installing a wireless radio communications system with all necessary hardware in accordance with the plans and Special Provisions to provide a data link between subscriber Intelligent Transportation System (ITS) or signal field devices and master radio units connected to the fiber optic network. This specification includes the following radio systems:

- Spread Spectrum serial and Frequency Shift Keying (FSK) radio systems with bi-directional, full duplex communications between two “line-of sight” antennas using license free, frequency hopping spread spectrum technology operating in the 902-928 MHz frequency
- Broadband Ethernet IEEE 802.11 point to point and point to multipoint radio systems operating in the 2.4 GHz and 5.8 GHz unlicensed bands, as well as the licensed 4.9 GHz spectrum
- WiMAX IEEE 802.16 point to multipoint radio systems operating in the 3.4 – 3.65 GHz range
- 3G/4G Cellular Router

This work includes all test periods, warranties and guarantees as designated in subsequent sections, and response to maintenance and operational issues as described in subsequent sections.

The Contractor shall apply for, obtain and pay for all utility services, FCC licensing requirements, and pole attachment permits that are necessary for the wireless communications installation and operation required in the Plans. The Contractor shall maintain these utility services until final acceptance of the communications system.

Upon final acceptance, make an orderly and uninterrupted transfer of these services and permits to the Department, local government or other jurisdiction that will be responsible for subsequent maintenance and operation.

926.1.01 Related References

A. Standard Specifications

Section 106—Control of Materials

Section 631—Changeable Message Signs

Section 639—Strain Poles for Overhead Sign and Signal Assemblies

Section 647—Traffic Signal Installation

Section 682—Electrical Wire, Cable and Conduit

Section 915—Mast Arm Assemblies

Section 922—Electrical Wire and Cable

Section 923—Electrical Conduit

Section 925—Traffic Signal Equipment

Section 935—Fiber Optic System

Section 936 – CCTV

Section 937 – Detection Systems

Section 939—Communications and Electronic Equipment

B. Referenced Documents

National Electrical Manufacturers Association (NEMA) Traffic Control Systems Standards No. TS 1

NEMA Traffic Control Systems Standards No. TS-2

National Electrical Code (NEC)

National Electrical Safety Code (NESC)

926.1.02 Submittals

The following charts provide the Contractor with an outline of the submittal requirements for the equipment and components for the following pay items. This chart is to be used as a guide and does not relieve the Contractor from submitting additional information to form a complete submittal package. Provide submittal data for all equipment, materials, test procedures, and routine maintenance procedures required for these items as required in these Special Provisions.

Submittal Requirements Table												
Material	**Specification Reference**	**Catalog Cut Cuts**	**Mfg Detail. Specification**	**Shop Drng Drawings**	**Lab Test Report**	**Installation Proced.**	**Mainten. Proced.**	**Test Plan**	**Test Reports**	**Training Schedule**	**Warranty**	**Submittal Due Date (Calendar Days after NTP)**
Spread Spectrum Transceiver FSK & RS232	926.2.01	X	X	X	X	X	X	X	X			60 Days
Spread Spectrum Transceiver RS 232	926.2.02	X	X	X	X	X	X	X	X			60 Days
Wireless Radio Repeater Station	926.2.03	X	X	X	X	X	X	X	X			60 Days
900 MHz Antennas, Power Divider, SPD	926.2.04 - 06	X	X	X		X						60 Days
Broadband Ethernet Radio	926.2.07	X	X	X	X	X	X	X	X			60 Days
Broadband Ethernet Radio Antennas, Power Divider, SPD	926.2.08 - .11	X	X	X		X						60 Days
WiMax Base Station and Subscriber Units, POE Injector (as applicable)	926.2.12 - .14	X	X	X	X	X	X	X	X			60 Days
3G/4G Cellular Router	926.2.15	X	X	X	X	X	X	X	X			60 Days
Training and Warranties										X	X	60 Days

For each piece of wireless system equipment, submit to the Engineer for approval, two (2) hard copies of the manufacturer's descriptive literature (catalog cuts), technical data, operational documentation, service and maintenance documentation and all other materials required within these specifications and an electronic copy of all material, which includes but is not limited to all the aforementioned documents. Electronic documents shall be placed on a CD as Adobe® pdf documents and delivered to the Engineer.

Products appearing on the Qualified Products List (QPL) are exempt from normal submittal process. These products have been evaluated by the Office of Traffic Operations and have proven their capability of meeting the applicable Georgia Department of Transportation Specification. Any of these products may be used without submitting catalogue cuts, sampling or pre-testing. The Contractor shall submit a letter to the Engineer, stating which QPL items they will use. The Engineer and/or department designee must ascertain that the construction item is the same material identified on the QPL and will acknowledge receipt of these items in the project diary or as required by the Construction manual.

It is the Contractor's responsibility to verify all wireless radio links and frequencies prior to installation of wireless radio products. Provide all necessary equipment and personnel to test the ability to use frequency hopping spread spectrum wireless, broadband wireless Ethernet, WiMax radio wireless communications, or cellular coverage of a specific carrier at a site specific location, as determined in the plans. Contractor's site survey or studies shall be completed by qualified technicians applicable to the wireless technology being deployed. Equipment shall be specific to the application and frequencies being implemented, and shall study a broad range of wireless frequency spectrums. The site survey or study shall allow the obtainment of the following results for the site specific locations: Signal Strength (dBm), Fade margin (dB), S/N Ratio, Data integrity (poll test), and a Complete Frequency Spectrum Scan. The wireless links shall be shown on drawings that depict elevation changes and obstacles that identify any objects that may interfere with the wireless signal. Final locations and type of antennas and any necessary repeater stations are to be approved by the Engineer.

The study shall be conducted well in advance of the installation, so that prudent decisions on the applicable technology can be made. The Contractor shall supply the engineer with all spectrum study reports and recommendations or concerns as to the use of the wireless technology of all applicable sites on the project.

Provide as-built documentation of all wireless installations showing mounting locations, mounting heights, serial numbers and model numbers of all wireless equipment used.

926.2 Materials

This section shall summarize device specific material requirements for each wireless radio system. Ensure that all wireless equipment and materials of this specification meet all of the following general requirements, as well as the device-specific material requirements.

A. Requirements (General)

Submit to the Engineer material specifications information on all materials proposed for use on the project.

Written approval of all wireless equipment submittals is required from the State Traffic Signal Engineer prior to beginning any work on the wireless communication installation.

All equipment furnished shall be new and meet the requirements of the most recent edition(s) and/or standards of the following:

- Underwriter's Laboratory Incorporated (UL)
- Electronic Industries Association (EIA)
- National Electric Code (NEC)
- American Society of Testing and Materials (ASTM)
- American National Standards Institute (ANSI)
- International Municipal Signal Association (IMSA)
- National Electrical Manufacturers Association (NEMA)
- Applicable Standards, Specifications, and Regulations of the:

  Georgia Department of Transportation
  Traffic Signal Electrical Facility & NaviGAtor Support (TSEF)
  935 E. Confederate Avenue, Building 24
  Atlanta, GA 30316

B. Fabrication (General)

General Provisions 101 through 150.

C. Acceptance (General)

General Provisions 101 through 150.

D. Materials Warranty (General)

- Provide all manufacturers' warranties and guarantees for all wireless equipment purchased and turned over to the Department as part of this contract.
- Ensure that warranties and guarantees are consistent with those provided as customary trade practices; or as otherwise specified in the plans, Standard Specifications, Supplemental Specifications or Special Provisions.
- Ensure that manufacturer's and supplier's warranties and guarantees are transferable to the agency or user that is responsible for wireless network maintenance, are continuous throughout their duration and state that they are subject to such transfer.
- Ensure equipment provided under this specification shall be warranted by the manufacturer to be free from defects in materials and workmanship for a period of a minimum of three years from Project Final Acceptance.
- Ensure the manufacturer will repair any faulty equipment during this period at no charge to the Department for parts, labor or shipping to and from the factory.

926.2.01 Spread Spectrum Wireless Radio Transceiver Unit with FSK and RS 232 Connection (Type A, Type B, Type C)

Provide a wireless communications radio for point to point or point to multipoint to support FSK communications using 4 wire full duplex or 2 wire half duplex; and RS 232 serial communications. Both interfaces are provided on the unit but only one interface is required to be active in each application. This unit is to be supplied with power supply, and configuration software.

A. Requirements

Furnish a spread spectrum wireless radio unit with all necessary hardware (excluding antennae) to provide a data link between field devices (i.e. Traffic Signal Controllers, Dynamic Message Signs, etc.). Radio unit will use a bi-directional, full duplex communications channel between two "line-of-sight", or near line-of-sight antennas using license free, frequency hopping spread spectrum technology operating in the 900 MHz frequency band.

1. 900MHz Wireless Radio Unit

   Furnish license free 900 MHz radio modems with configuration software. Design radio modems to work in "point-to-point", "point-to-multipoint" configurations. Ensure the spread spectrum wireless radio meets the following minimum requirements:

   - License free (ISM) 900 MHz Spread Spectrum radio band
   - Frequency Hopping Spread Spectrum Technology (Direct Sequence Spread Spectrum Technology is not acceptable)
   - Bi-Directional, Full Duplex
   - Programmable Radio Frequency (RF) output levels of 1mW to 1 Watt
   - RS-232 interface capable of operating from 1200 bps to 115.2 Kbps, with 8 or 9 bit format or 1200 bps FSK (2 or 4-wire) Bell 202 standard systems configurations DB9-F connector for RS-232 port, and RJ 22 for the FSK port, or approved equivalent
   - Built-in store-and-forward (single radio repeater – no back to back radios set-ups are allowed to accomplish this function)
   - 32 Bit encryption
   - Receiver Sensitivity of –110dBm @ 10^-6 BER
   - Antenna port: Reverse Polarity - Threaded Normalized Connector-Female (RP TNC-F) antenna connector
   - Front panel indicators for:
   - Power
   - Transmit Data
   - Receive Data
   - Data Port Indicator
   - RSSI indicator
   - Operating temperature of –40 to +176 degrees F (-40 to +80 degrees C) at 0 to 95% Humidity
   - Power supply requirements
   - Type A: Wall Adaptor: 120 VAC UL/CSA wall cube plug in module with 12 VDC, 1 Amp, nominal output.
   - Type B: Powered from the signal cabinet input rack through the edge connector in standard 170 input file
   - Type C: Power will be supplied through the backplane printed circuit board of the 2070 controller

   Ensure that the wireless radio unit is a fully functional field device (i.e. connected equipment does not require any field device modifications with regards to hardware or software).

2. Type A Radio – Shelf Mounted 900 MHz Spread Spectrum Radio

   This unit shall be supplied as a shelf mounted radio with all cabling and power supplies necessary to mount on a cabinet shelf and plug into a wall unit receptacle.

3. Type B Radio – Rack Mounted 900 MHz Spread Spectrum Radio

   This unit is to be supplied such that it may be installed in standard 170 input file; or NEMA TS1/ TS 2 Standard Detector Rack. The rack will provide power for the unit. The rack mount unit shall not use any other backplane signals on the rack.

4. Type C Radio – 2070 Mounted 900 MHz Spread Spectrum Radio

   This unit is to be plugged into the 2070 communications slot to provide wireless communication for the controller. This unit will support all 2070 7A communications module functionality as well as providing radio modem functions.

5. Configuration Software (all Types)

   Furnish units with a Window Based™ software program that uses a GUI (Graphical User Interface) to provide "remote programming, radio configuration, remote maintenance, diagnostics and spectrum analyzer" features. Provide no-cost configuration and diagnostic software that can be upgraded in the future at no additional charge.

   Ensure the radio modem is configurable from a single location (i.e. master radio location) via supplied software (no extra cost). Furnish software supplied with drivers to allow easy set-up with all industry standard traffic signal controllers, including 2070 controllers containing custom software written specifically for the Georgia Department of Transportation. Ensure the supplied software contains pre-written drivers for industry standard radar and video detection packages and Dynamic Message Sign controllers.

926.2.02 Spread Spectrum Wireless Radio Transceiver Unit with RS 232 Connection

Provide wireless communications point to point or point to multipoint to support RS 232 serial communications. This unit is to be supplied with power supply, and configuration software.

A. Requirements

Furnish a spread spectrum wireless radio unit with all necessary hardware (excluding antennae) to provide a data link between field devices (i.e. Traffic Signal Controllers, Dynamic Message Signs, etc.). Radio unit will use a bi-directional, full duplex communications channel between two "line-of-sight" or near line-of-sight antennas using license free, frequency hopping spread spectrum technology operating in the 900 MHz frequency band.

1. 900MHz Wireless Radio Unit

   Furnish license free 900MHz radio modems with configuration software. Design radio modems to work in "point-to-point", and "point-to-multipoint" configurations. Ensure the spread spectrum wireless radio meets the following minimum requirements:

   - License free (ISM) 900 MHz Spread Spectrum radio band
   - Frequency Hopping Spread Spectrum Technology (Direct Sequence Spread Spectrum Technology is not acceptable)
   - Bi-Directional, Full Duplex
   - Programmable Radio Frequency (RF) output levels of 1mW to 1 Watt
   - RS-232 interface capable of operating from 1200 bps to 115.2 Kbps, with 8 or 9 bit format
   - DB9-F connector for RS-232 port, or approved equivalent
   - 16 bit Cyclic Redundancy Check (CRC) error checking with auto re-transmit
   - Built-in store-and-forward (single radio repeater – no back to back radios set-ups are allowed to accomplish this function)
   - 32 Bit encryption
   - Receiver Sensitivity of –110dBm @ 10^-6 BER
   - Antenna port: Reverse Polarity - Threaded Normalized Connector-Female (RP TNC-F) antenna connector
   - Front panel indicators:
   - Power
   - Transmit Data

- Receive Data
- RSSI Indicator
- Operating temperature of –40 to +176 degrees F (-40 to +80 degrees C) at 0 to 95% Humidity
- Power supply requirements
- Wall Adaptor: 120 VAC UL/CSA wall cube plug in module with 12 VDC, 1 Amp, nominal output.

2. Configuration Software

   Furnish units with a Window Based™ software program that uses a GUI (Graphical User Interface) to provide "remote programming, radio configuration, remote maintenance, diagnostics and spectrum analyzer" features. Provide no-cost configuration and diagnostic software that can be upgraded in the future at no additional charge.

   Ensure the radio modem is configurable from a single location (i.e. master radio location) via supplied software provided with the radio unit at no extra cost. Furnish software supplied with drivers to allow easy set-up with all industry standard ITS equipment.

926.2.03 Self Contained Wireless Radio Transceiver & Repeater Station

Provide wireless communications point to point or point to multipoint. Radio modem & Repeater Station to extend the range of communications within the system. The unit is to be furnished in its own cabinet with all necessary hardware and includes power supply, and configuration software.

A. Requirements

Furnish an operational wireless repeater radio system complete with a NEMA-4X enclosure for mounting on a pole. Furnish a wireless radio unit with all necessary hardware including antenna mounting hardware, and cabinet to provide a data link between field devices (i.e. Traffic Signal Controllers, Dynamic Message Signs, etc.). Radio unit will use a bi-directional, full duplex communications channel between two "line-of-sight" or "near line-of-sight" antennas using licensed, or license free, wireless technology, as determined by the radio type. The repeater function shall also allow for a communications drop to a local device at the repeater location.

1. Repeater Unit

   Furnish licensed, or license free radio modems with configuration software for the repeater location. Design radio modems to work in "point-to-point", and "point-to-multipoint" configurations, as determined by the application being repeated. Ensure the wireless radio meets the requirements of the radio signal that it is repeating, as detailed in other sections of this specification. The repeater station shall include a NEMA-4X rated cabinet enclosure, antennas and all cabling required to repeat the wireless signal

2. Cabinet:

   Furnish the cabinet shell constructed from unpainted aluminum. Ensure that all non-aluminum hardware on the cabinet is stainless steel or an approved non-corrosive alternate.

   Ensure that all electrical components and circuit breakers are sized according to the wireless radio manufacturer specifications. Ensure that the cabinet surge protection meets the requirements of Section 925.2.02 Section A, part 14, Surge Protection.

   Ensure that all components are arranged for easy access during servicing.

   Provide sufficient size so that the equipment installed will not occupy more than 60 percent of the total cabinet volume.

   Provide enclosure latching hardware which will allow for external locking capability.

3. Antenna

   Furnish and install a directional antenna and coaxial cable to specifications in this specification, and applicable to the technology being repeated. The antenna shall not have a Voltage Standing Wave Ratio VSWR rating more than 2.0 nominal (VSWR ratio of 1.5 preferred), or shall adhere to the requirements of the antenna as outlined in this specification.

   Furnish and install surge protection devices installed in line between each antenna and the radio modem inside the cabinet. Ensure the surge protection device is compatible with the equipment and meets the minimum specifications of the applicable radio surge protection device.

4. Configuration Software:

   Furnish units with a Window Based™ software program that uses a GUI (Graphical User Interface) to provide "remote programming, radio configuration, remote maintenance, diagnostics and spectrum analyzer" features. Provide, at no additional cost to the Department, configuration and diagnostic software that can be upgraded in the future at no additional charge.

Ensure the radio modem is configurable from a single location (i.e. master radio location) via supplied software (no extra cost). Furnish software supplied with drivers to allow easy set-up with all industry standard traffic signal controllers, including 2070 controllers containing custom software written specifically for the Georgia Department of Transportation. Ensure the supplied software contains pre-written drivers for industry standard radar and video detection packages and Dynamic Message Sign controllers, or as directed by the Engineer.

926.2.04 900 MHz Directional Radio Antenna (Yagi) and Connecting Cable

Provide wireless communications antenna with connecting cables including surge protection to the Radio unit.

A. Requirements

Furnish a directional antenna that will interface with a radio unit. Included with this item are the cables to connect with the radio unit and surge protection.

1. Yagi Directional Antenna

   Furnish an antenna that meets the following minimum specifications:

Frequency Range	Compatible with supplied radio in 900 MHz spectrum
Nominal Gain	8.5 dBd or 10.64dBi, or approved equivalent
Front to Back Ratio	18 dB
Horizontal Beamwidth (at half power points)	65 degree
Vertical Beamwidth (at half power points)	55 degree
Power Rating, UHF Frequency	200 Watts
Lightning Protection	DC Ground
Termination	Coaxial pigtail with a Standard N-Type Female Connector
Rated Wind Velocity	125 mph (200 kph)
Rated Wind Velocity (with .5 inch radial ice)	100 mph (161 kph)
Projected Wind Surface Area (flat plane equivalent)	0.26 ftsq. (0.024 msq)
Number Elements	6 for a nominal 9 dB gain, 9 for a nominal 13 dB gain
Allows for Vertical or Horizontal polarization	
VSWR	2.0:1 (maximum)

   Furnish mounting hardware to secure the antenna to the metal pole or wood pole, as recommended by the manufacturer of the antenna and as approved by the Engineer.

2. Coaxial Cable:

   Furnish a LMR 400 Cable or equivalent antenna coaxial cable to provide a link between the antenna and the lightning arrestor that meets the following minimum specifications.

Attenuation (dB per 100 feet) @ 900 MHz	3.9 dB
Power Rating @ 900 MHz	0.58 kW
Center Conductor	0.109” Copper Clad Aluminum
Dielectric: Cellular PE	0.285”
Shield	Aluminum Tape – 0.291” Tinned Copper Braid – 0.320”
Jacket	Black UV protected polyethylene
Bend Radius	1” with less than 1 ohm impedance change at bend
Impedance	50 ohms
Capacitance per foot	23.9 pf/ft
End Connectors	Standard N-Type Male Connectors on both ends

3. Lightning Arrestor:

   Furnish a lightning arrestor installed in line between each antenna and its designated radio modem inside the equipment cabinet. Furnish a lightning arrestor that meets the following minimum specifications:

   - Surge: 50kA IEC 1000-4-5 8/20us waveform 500 Joules
   - Turn-on: 600 VDC ±20% 2.5 ns for 2kV / ns
   - Insertion Loss: ≤0.1 dB over frequency range
   - Temperature: -49 to 185 degrees F Storage/Operating 122 degrees F(-45° C to +85°C Storage/Operating +50°C)
   - Vibration: 1G up to 100Hz
   - Utilizes UL497B listed gas tube
   - Throughput energy: ≤ 200 uJ for 3kA @ 8/20 μs Waveform
   - Throughput voltage: ≤150 Vpk
   - VSWR: 1.1:1
   - Frequency Range: 125 MHz to 1000 MHz
   - Max Power: VHF 375W, UHF (low) 250W, 800MHz to 1GHz, 125W
   - Multistrike capability
   - Low strike throughput energy
   - Standard N-Type Female Connector on both the surge side and protected side connectors

926.2.05 900 MHz Omni Directional Radio Antenna and Connecting Cable

Provide wireless communications antenna with connecting cables including surge protection to the Radio unit.

A. Requirements

Furnish an Omni directional antenna that will interface with a radio unit. Included with this item are the cables to connect with the radio unit and surge protection.

1. Omni Directional Antenna

   Furnish an Omni directional antenna that will allow the system to function as designed. Furnish 3dB or 6dB antennas that meet the following minimum specifications:

Frequency Range	compatible with supplied radio in 900 MHz spectrum
Nominal Gain	Typical gains of 3 or 6 dB (dependent upon gain needed for application)
Termination	Standard N-Type Female Connector
Impedance	50 ohms
VSWR	1.5:1

Vertical Beam Width	3 dB – 33 degrees; 6 dB – 17 degrees
Lightning Protection	DC Ground
Power Rating, UHF Frequency	100 Watts
Rated Wind Velocity	125 mph (241 kph)
Shall be of solid, single piece construction	
Mount in a vertical direction and limit to vertically polarized RF systems	

Furnish mounting hardware to secure the antenna to the metal, concrete, or wood pole, as recommended by the manufacturer of the antenna and as approved by the Engineer.

2. Coaxial Cable:

Furnish a LMR 400 Cable or antenna coaxial cable to provide a link between the antenna and the lightning arrestor that meets the following minimum specifications.

Attenuation (dB per 100 feet) @ 900 MHz	3.9 dB
Power Rating @ 900 MHz	0.58 kW
Center Conductor	0.109” Copper Clad Aluminum
Dielectric: Cellular PE	0.285”
Shield	Aluminum Tape – 0.291” Tinned Copper Braid – 0.320”
Jacket	Black UV protected polyethylene
Bend Radius	1” with less than 1 ohm impedance change at bend
Impedance	50 ohms
Capacitance per foot	23.9 pf/ft
End Connectors	Standard N-Type Male Connectors on both ends. Meet industry standard dB loss when attaching connectors

3. Lightning Arrestor:

Furnish a lightning arrestor installed in line between each antenna and its designated radio modem inside the equipment cabinet. Furnish a lightning surge protection device that meets the following minimum specifications:

- Surge: 50kA IEC 1000-4-5 8/20us waveform 500 Joules
- Turn-on: 600 VDC ±20% 2.5 ns for 2kV / ns
- Insertion Loss: ≤0.1 dB over frequency range
- Temperature: -49 to 185 degrees F Storage/Operating 122 degrees F (-45° C to +85°C Storage/Operating +50°C)
- Vibration: 1G up to 100Hz
- Utilizes UL497B listed gas tube
- Throughput energy: ≤ 200 uJ for 3kA @ 8/20 μs Waveform
- Throughput voltage: ≤150 Vpk
- VSWR: 1.1:1
- Frequency Range: 125 MHz to 1000 MHz
- Max Power: VHF 375W, UHF (low) 250W, 800MHz to 1GHz, 125W
- Multistrike capability
- Low strike throughput energy

Standard N-Type Female Connector on both the surge side and protected side connectors

926.2.06 900 MHz Antenna Power Divider

Provide item splitting the radio antenna connection for locations where two antennas are required with one radio unit. This item is to include a “T” Splitter and two cables.

A. Requirements

Furnish a "T" Splitter for providing two separate antenna connections to one radio unit. The Splitter shall be weatherproof and provide for low insertion loss. All connectors will be Type N Female. The splitter shall be furnished with two 6 foot cables of LMR 400 Cable or equal. The cables will provide Type N Male connectors on either end. These cables will provide a link between the antennas and the splitter.

1. Power Divider

   Furnish a two way weatherproof splitter with the following minimum characteristics.

   - Power Division: 2-Way
   - Frequency = 900 – 1100 MHz
   - Dimensions: less than 5" x 2.5"
   - Insertion Loss: < 0.22 dB
   - Max Input Power: 500 Watts
   - Impedance: 50 Ohm
   - VSWR ref. to 50 Ohm (max): 1.3:1
   - Connectors: N Female

2. Cables

   Furnish two LMR 400 Cable or equivalent antenna coaxial cable to provide a link between the antenna and the lightning arrestor that meets the following minimum specifications:

Attenuation (dB per 100 feet) @ 900 MHz	3.9 dB
Power Rating @ 900 MHz	0.58 kW
Center Conductor	0.109" Copper Clad Aluminum
Dielectric: Cellular PE	0.285"
Shield	Aluminum Tape – 0.291" Tinned Copper Braid – 0.320"
Jacket	Black UV protected polyethylene
Bend Radius	1" with less than 1 ohm impedance change at bend
Impedance	50 ohms
Capacitance per foot	23.9 pf/ft
End Connectors	Standard N-Type Male Connectors on both ends. Meet industry standard dB loss for connectors

926.2.07 Broadband Wireless Ethernet Radio.

A. Requirements

The broadband Ethernet wireless radio network shall be designed as part of the communication system for the project and shall operate with minimal disruption to the device communications. The manufacturer of the radio devices shall be able to provide various frequencies of 2.4 GHz and 5.8 GHz unlicensed, as well as the licensed 4.9 GHz frequency, as selected by the Department. All radios shall be supplied with the appropriate software and cabling necessary for full configuration of the radio system, including serial and Cat 5e cables, as necessary for programming and connection to local switches. Radios shall be configured in either point-to-point, or point-to-multipoint configuration, as per the plans. All antenna cable attenuation shall be respective and appropriately sized to the frequency being attenuated at industry standard. Should a Power Over Ethernet (POE) radio be submitted by the Contractor, the Contractor shall use the appropriate POE field switch, as outlined in section 939 of the standard specifications. Should a switch not be available, and a standalone POE injector is required, the injector shall be supplied with an appropriate surge protection device to protect it from surging that is typical for 'plug-in' type devices. Submit to the Department the surge protection device that will be used with the POE injector with the wireless radio submittal.

1. Radio General Parameters.

   The wireless broadband Ethernet radios shall employ the following minimum equipment parameters:

- Frequency Selection: Dynamic Frequency Selection 40 MHz, 20 MHz, 10 MHz and 5 MHz channels
- Radio Frequency (RF) Power: up to 28 decibels adjusted (dBm)
- Transmission Rate: minimum 54 Mbps , automatic fallback
- Antenna Connector: Type "N"
- IP67 Weatherproof rating
- Operating Temperature: -30° C to +60° C
- Humidity: 5 percent to 95 percent non-condensing
- Modulation Format direct sequence spread spectrum (DSSS) and/or orthogoral frequency division multiplexing (OFDM)
- Certification/Compliance Federal Communications Commission (FCC) Part 15.247
- Standards Compliance: IEEE802.11a/b/g
- Network Protocols Transparent to 802.3 services and applications
- Configuration and Management - Telnet, Simple Networking Management Protocol (SNMP), Secure Shell (SSH)
- Security: Advanced Encryption Standard-(AES-CCM) 128 bits, Media Access Control (MAC)/Radius based authentication
- Physical Interface: Ethernet (via RJ45) 10/100 BaseT, auto-sense, auto-negotiate
- Power Requirements: Standard Power Supply 120 VAC or DC adapter or 9 to 18 VDC from a solar recharged battery. POE products and injectors shall be reviewed and approved by the Department.

926.2.08 Broadband Wireless Ethernet Radio Flat Panel Antenna

A. Requirements

The antenna system shall be able to operate on various frequencies of 2.4 GHz and 5.8 GHz unlicensed, as well as the licensed 4.9 GHz frequency, as selected by the Department. The antenna system shall be compatible with the wireless radios provided by the Contractor. All antennas shall be supplied with the appropriate cabling necessary for full configuration of the radio system, including appropriately sized coaxial cable. All antenna cable attenuation shall be respective and appropriately sized to the frequency being attenuated, and adhere to the following minimum criteria:

Antenna Type: Flat Panel

- Housing: UV-Stable white fiberglass housing with tilt/ swivel mast mount kit, or approved equivalent.
- Connector: Type "N" Female
- Frequency: 2.3 – 2.5 GHz or 4.9 – 6.0 GHz (as selected by Department)
- Beamwidth: 7.5 degrees (minimum)
- Polarization: Vertical or Horizontal
- F/B Ratio: > 25 dB
- Cross polarization rejection: > 25 dB
- Impedence: 50 Ohm
- VSWR: < 1.5:1 Avg
- Lightning protection: DC Ground
- Antenna Cable: half-inch Solid Copper Shield Corrugated with Type "N" Connectors, Loss < 3.52 dB/100 Ft.

926.2.09 Broadband Wireless Ethernet Radio Omni Directional Antenna

A. Requirements

The antenna system shall be able to operate on various frequencies of 2.4 GHz and 5.8 GHz unlicensed, as well as the licensed 4.9 GHz frequency, as selected by the Department. The antenna system shall be compatible with the wireless radios provided by the Contractor. All antennas shall be supplied with the appropriate cabling necessary for full

configuration of the radio system, including appropriately sized coaxial cable. All antenna cable attenuation shall be respective and appropriately sized to the frequency being attenuated.

- Housing: fiberglass housing with steel mounting brackets, or approved equivalent.
- Connector: Type "N" Female
- Frequency: 2.3 – 2.5 GHz or 5.8 – 6.0 GHz (as selected by Department)
- Beamwidth: 360 degrees
- Polarization: Vertical
- Impedence: 50 Ohm
- VSWR: < 1.5:1 Avg
- Lightning protection: DC Ground
- Antenna Cable: half-inch Solid Copper Shield Corrugated with Type "N" Connectors, Loss < 3.52 dB/100 Ft.

926.2.10 Broadband Wireless Ethernet Radio Sectoral Antenna

A. Requirements

The antenna system shall be able to operate on various frequencies of 2.4 GHz and 5.8 GHz unlicensed, as well as the licensed 4.9 GHz frequency, as selected by the Department. The antenna system shall be compatible with the wireless radios provided by the Contractor. All antennas shall be supplied with the appropriate cabling necessary for full configuration of the radio system, including appropriately sized coaxial cable. All antenna cable attenuation shall be respective and appropriately sized to the frequency being attenuated.

- Housing: fiberglass housing with steel mounting brackets, or approved equivalent.
- Connector: Type "N" Female
- Frequency: 4.9 – 6.0 GHz (as selected by Department)
- Beamwidth: 90 degrees (minimum)
- Polarization: Vertical
- Impedence: 50 Ohm
- VSWR: < 1.5:1 Avg
- Lightning protection: DC Ground
- Antenna Cable: half-inch Solid Copper Shield Corrugated with Type "N" Connectors, Loss < 3.52 dB/100 Ft.

926.2.11 Broadband Wireless Ethernet Radio Power Divider

A. Requirements

Where a single radio is required to communicate with two radios, a power divider shall be provided that meets the following requirements:

- Divider Type: Two-way passive
- Frequency Range: 2.3 – 2.5 GHz or 4.9 – 6.0 GHz (as selected by Department)
- Insertion Loss: < 0.4 dB (over power division)
- Impedance: 50 Ohms
- VSWR: < 1.5:1 Typical
- Power: 25 W
- Temperature: -40° C to + 85° C
- Connectors N Female

926.2.12 WiMax Radio Base Station Units

A. Requirements

The WiMax Radio system shall be via a 3.4 - 3.65GHz 802.16E-2005 WiMax Base Station (WBS) to multiple Subscriber Units (SU) for Intelligent Transportation System (ITS) projects. The intent of the WBS is to be installed in the field to support the multi-link wireless communications wide area network (WAN). Ensure that the WBS provides wireless Ethernet connectivity at transmission rates of up to 40 megabits per second from the remote ITS device installation location to the ITS network trunk interconnection point, or fiber trunk point. These requirements may be supplemented or amended by the requirements given elsewhere in the specifications, or on the plans.

The WIMAX Base Station, herein referred to as WBS, shall be compliant with the 802.16e standard, and the product family shall be certified by the WIMAX Forum certification wave 2 in the 3.4 - 3.65 GHz frequency band. The WBS must support three modes of operation: 1) ASN mode for mobility applications 2) Standalone mode for fixed applications, and 3) Mobility capability in standalone mode without Access Service Network (ASN) gateway. The standalone mode shall be completely layer 2, supporting layer 2 forwarding inside the base station.

The WBS shall support point to multipoint operation with a minimum support of 64 active subscribers per sector. The WBS shall operate in the 3.4 - 3.65 GHz frequency band and already certified for use by the FCC in this band. The WBS shall be provided and configured as a complete system including Antennas, Subscriber Units, and Power Over Ethernet injectors as described herein.

Ensure that the Department ITS network administrator will be able to manage each WBS individually or as a group/cluster for switch/router configuration, performance monitoring, and troubleshooting. These specifications require additional minimum management intelligence (i.e., Layer 3) typical of most current industrial Ethernet router deployments. Ensure that the WBS includes Layer 3 capability providing architecture standardization, open connectivity (i.e., interoperability), bandwidth management, rate limiting, security filtering, and general integration management of an advanced Ethernet switching architecture.

Ensure that the WBS complies with all applicable of the following specifications and standards for wireless 802.16E-2005 Ethernet communications, including these minimum criteria:

1. RADIO AND MODEM
   - Frequency: 3400 MHz to 3720 MHz
   - IEEE802.16-2005 (16e OFDMA)
   - WIMAX Forum Wave 2 Profile
   - Time Division Duplex (TDD)
   - Channel Bandwidth (MHz) 3.5, 5, 7, 10
   - Frequency Resolution 0.25 MHz
   - Diversity Support 2x2, STC/MIMO-SM
   - Output Power (average) 2 X 27 dBm
   - Modulation 512/1024 FFT points; QPSK, 16QAM, 64QAM
   - Antennas Connectors N-Type, 50 ohm, lightning protected
   - Integrated or External Sector or Omni Antenna
   - Network Interfaces: 10/100BaseT Half / Full Duplex IEEE 802.3 CSMA/CD
   - Environmental: Operating Temperature: -40°C to +65°C at 5% - 95% humidity, non-condensing
   - Weather protected: IP67
   - FCC part 15, subpart B, class A
   - The WBS shall be capable of dynamic link adaptation, automatically adjusting modulation level, sub-channels and MIMO zones, as well as static link adaptation.
   - The WBS shall be capable of an extended cell range mode, where subscribers up to 40Kms away can connect to the base station (extended TTG/RTG period).

- The WBS shall support a mode where 75% of the bandwidth shall be capable in the uplink direction (settable by the user)
- Network: The WBS shall support a full layer 2 solution in standalone mode including over the air VLAN support, Ethernet multicast support, without the use of an external router.
- Throughput: The WBS shall be able to provide 40 Mb/s net aggregate throughput in a 10 MHz channel
- Security: The WBS shall support Authentication, Authorization and Accounting (AAA) based authentication and AES 128 encryption.
- CCM-Mode 128-bit AES, CCM Mode, AES Key Wrap with 128-bit key
- The WBS antennas shall be supplied as part of the base station unit, and not paid for separately. It is the Contractor's responsibility to supply the antennas for the application with the WBS.
- The antennas shall connect to the WBS directly in by RF cables with N-Type connectors. Antenna type, specifications and quantities will be based on final site specific designs. Antennas are to be tuned for the 3300-3800 MHz frequency range, or per the plans and specifications.

926.2.13 WiMax Radio Power Over Ethernet Injector (POE)

A. Requirements

Injectors are only to be supplied with approval from the Department, and must have all necessary surge protection devices supplied with the POE injector. The standalone power injector shall have the following options for input power in to the power injector:

- 10-60 VDC for distribution automation applications
- 88-300 VDC for substation application
- 85-264 VAC for AC power applications
- - 40C to +85°C temperature rating
- IEEE 1613 and IEC 61850-3 compliance
- Automatic detection of remote power devices
- Over-current protection, over and under voltage protection
- indicators for link, activity, and speeds

926.2.14 WiMax Radio Subscriber Unit

A. Requirements

The Subscriber Unit shall be manufactured from the same vendor as the WiMax Base Station (WBS). The Subscriber Units shall conform to the following specifications:

- Be SNMP V1, V2, and V3 compatible
- Available in either integrated antenna and non-integrated antenna form factors.
- Compatibility with Wave 2 Profile (MIMO)
- Operation Mode: TDD
- Antenna Diversity Mode: STC/MRC/MIMO
- Power Source: 48VDC from external source using Power Over Ethernet (POE) connectivity
- Operating Temperature: -40C to +75C
- Ethernet Standard Compliance: IEEE 802.3 CSMA/CD
- Local Management: Telnet, Web Browser
- Remote Configuration and Software Updates: FTP
- Authentication: EAP-TTLS, Device: X509 Digital Certificate

926.2.15 3G/4G Cellular Router (Type A and Type B)

Provide an Machine-to-Machine (M2M) cellular router with Secure Socket Layer (SSL) and IPSec VPN (Virtual Private Network) functionality, with embedded cellular modem technology for various cellular carriers. The data shall be accessible via a public or private IP connection, via VPN tunnel with IPSec, SSL, as well as IP pass-through. The unit shall be compatible with existing core routers and ITS field equipment. The unit shall incorporate a user-friendly software interface with remote management and the ability to read and display alarm reporting and system logs. Provide a unit with the following minimal criteria:

- Wireless Interface: Evolution-Data Only (EVDO) Rev. A, fallback to Code Division Multiple Access (CDMA) 1xRTT (or)High-Speed Packet Access + (HSPA+), fallback to Enhanced Data rates for Global Evolution (EDGE), as selected by the Department
- Integrated Wireless modem supports 2G/3G/4G Wireless Cellular data networks. Department to determine carrier
- Routing & Security: IP pass-through, VPN tunnel: IP Sec, SSL, Encryption 3DES/AES 128-256, Firewall, MAC address filtering/Access Control List
- Indicators: Power, Signal, Ethernet Link, Activity
- Power Requirements: AC: 100-240VAC, 50-60Hz (with external adapter) or DC: 12, 24, 48 VDC, as specified by the Department
- Environmental: Extended Temperature Range: -30° C to +70° C, 5% - 95% humidity
- Standards: Restriction of Use of Hazardous Substances (RoHS) compliant, Electromagnetic Compatibility (EMC): FCC Part 15
- Type A Cellular Router – Minimum of one (1) DB-9 RS-232 serial port and one (1) 10/100 Base-T RJ45 Ethernet port
- Type B Cellular Router – Minimum of four (4) 10/100 Base-T RJ45 Ethernet ports

926.3 Construction Requirements

This section shall include typical construction requirements for installing and configuring wireless radio systems. This specification only gives general requirements of the wireless radio installations. It is the Contractor's responsibility to be fully certified and trained in the wireless technology application and the required installation of such devices by the manufacturer. All antenna connections shall be manufacturer-rated and secured from outside elements. The Contractor shall be experienced and/or certified in proper cable/connector crimping and manufacturer sealing methods so as to ensure a water-tight and corrosion resistant installation. Wrap all other exposed cable connections with self sealing tape for weatherproofing and moisture seal.

Refer to Subsection 107.07 of the Specifications regarding proper conduct of The Work.

926.3.01 Personnel

All personal shall be fully trained and manufacturer certified in the wireless installation application.

926.3.02 Equipment

Use machinery such as trucks, derricks, bucket vehicles, saws, trenchers, and other equipment necessary for the work and approved by the Engineer prior to installation operations.

926.3.03 Preparation

Utility Permits

A. Application

Apply for, obtain, and pay for utility services, FCC licensing and pole attachment permits for wireless communications operation required in the Plans or required when the site survey is completed.

B. Maintenance

Maintain these utility services until Final Acceptance of each installation. After Final Acceptance, transfer these services and permits to the Department, local government or jurisdiction responsible for maintenance and operation. Ensure that the transfer does not interrupt service.

C. Utility Location

When installing aerial cable of any type, ensure that overhead clearance and separation requirements conform to local utility company standards, OSHA, the NEC and the NESC. Refer to the Standard Details Drawings for further information on utility clearances.

926.3.04 Fabrication

General Provisions 101 through 150.

926.3.05 Construction

A. Acquiring and Disposing of Equipment

Do not modify the existing ITS or signal equipment communication design and operation without the District Traffic Engineer's written approval.

All communications equipment removed or replaced shall be returned to District Traffic Signal Shops unless otherwise noted in the Plans or as directed by the Engineer.

B. Communications Equipment Modification and Removal

Upon modification of any existing communications equipment, responsibilities for maintenance, operations and response to communications malfunction become the responsibility of the contractor, unless otherwise approved by the Engineer.

Remove existing communications equipment that is not used in the final installation when the new communications is operational at the request of the Plans or Engineer.

Carefully remove equipment to minimize damage and retain it in its original form.

C. Wireless Antennas

Provide and install each antenna in such a manner that avoids conflicts with other utilities or devices. Separation distances shall also be in accordance with the guidelines of the National Electrical Safety Code, and as specified in the antenna manufacturer's recommendations. Secure the antenna mounting hardware to the pole or device and route the antenna cable such that no strain is placed on the coaxial or Cat5e cable connectors. On wood pole installations, bond the antenna mounting hardware to the pole ground using # 6 |AWG bare copper wire using split bolt or decompression type fitting. All antennas shall include appropriate surge protection devices, and installed per the manufacturer's recommendations. All antenna mounts shall have graduated markings for correct horizontal and vertical aiming of the antenna. These markings shall be recorded on as-built drawings as to aid maintenance personnel on correct alignment of the antennas.

D. Power Dividers

Provide and install antenna power divider at locations determined by site survey to require two antennas. Install power divider using galvanized rigid steel or stainless steel bracket. Provide power divider and cables in accordance with Section 926.2.10. Ensure all weather exposed RF connectors are sealed with a self sealing rubberized tape.

E. Coaxial Cable

Provide and install Coaxial cable as specified in this specification and as directed by the manufacturer. Do not exceed the 1 inch (25.4) bend radius of the coaxial cable as it transverses from the cabinet to the antenna assembly. Connect the lightning arrestor to the coaxial cable in the equipment cabinet.

F. Lightning Arrestor

Provide and install the lightning arrestor as specified in this specification and as directed by the manufacturer, as part of the antenna. Properly ground and secure the arrestor in the cabinet, and per manufacturer recommendations.

G. Power & Cabling

Install all power and communications cabling neatly in the cabinet and on the pole. Provide drip loops and strain relief at all locations that are subject to high cable tension, such as at entry points into and out of a pole. Permanently label all cables in the cabinet. Ensure the power supply for the radio system is not connected to the GFCI receptacle circuitry located in the cabinet. Ensure the appropriate radio connecting cables, configuration cable and radio antenna patch cable are provided and installed correctly and are protected from transient voltage by the appropriate surge protection.

H. Self Contained Radio Cabinets

Provide and install any self contained radio cabinet units as shown on the plans or determined by the site survey. Provide radio cabinet units as specified in section 926.2. Install cabinet units at bottom of pole in accordance with utility locations and site survey. Provide electrical service to cabinet.

I. Documentation

Place a copy of all manufacturers' equipment specifications, instruction and maintenance manual in the equipment cabinet. Include required azimuth(s) and directional aiming information for directional antennas, including any offset from a direct bearing for the purpose of reducing received signal strength to sustainable levels.

J. Configuration Software

Furnish a Window Based™ software program that uses a GUI (Graphical User Interface) to provide remote programming, radio configuration, remote maintenance, diagnostics and spectrum analyzer features. Utilize this software during construction of the wireless system and turn over all software and configuration files to the Engineer at System Acceptance. The Configuration software shall be included in the cost of the wireless radio.

926.3.06 Quality Acceptance

The acceptance testing of the wireless systems shall consist of two phases: 1) post installation wireless system site testing; and 2) burn-in period. Perform acceptance testing for all equipment, hardware and work provided under this Contract, including each wireless point-to-point and point-to-multi-point field installation. Perform all testing in the presence of the Engineer. Submit all testing plans and documents to the Engineer during the submittal phase of the wireless equipment.

Post Installation Wireless System Site Testing

Develop detailed and thorough test procedures with full test plan descriptions, measurement equipment, and test results data sheets. As part of the submittal data requirements, submit these test plans to the Engineer for approval. The Engineer will notify the Contractor of the approval or disapproval of the test procedures; only test procedures approved by the Engineer can be used. Provide all necessary testing and measurement equipment or software necessary to measure wireless signal strength and throughput of the wireless radio link. Have a complete copy of all materials and equipment submissions and all documentary items on hand at all acceptance testing sessions. Demonstrate that the wireless system equipment, hardware and installation meet all requirements of the Contract and that connected devices are communicating across the wireless link appropriately. This includes, but not limited to construction methods, materials, equipment, site assembly, configuration, environmental conditions, performance, grounding and attenuation tests, signal strength and clarity. Wireless testing shall not commence until the individual device testing is accepted for equipment in which the wireless system is connected to. The wireless testing shall only commence after all communication and device components of the project are in place, and full foliage of trees and shrubs are present, in order to replicate typical line of sight communication scenarios.

Perform the Post-Installation Test as an onsite test of the complete field installation assembly of both the wireless device and field device(s) connected to it, through the wire or fiber connected network switch. Acceptance testing at a given site cannot begin until all work associated with that site is complete. Use a PC system, wireless manufacturer software, and connected device control software to demonstrate full communications to the connected device(s) on the wireless system through the wire or fiber connected switch. Demonstrate that the wireless radio technology is configured correctly, and that the signal

passes through the network. If streaming video is being broadcast through the wireless link, provide the ability to show that the video signal passes through the wireless link, with no interruption to frame rates.

Burn-in Period

A. General Requirements

Provide a 30-day burn-in period for all work and equipment included in the Contract and associated with the wireless equipment and link. The burn-in period shall consist of the field operation of the wireless system in a manner that is in full accordance with the wireless system requirements of the Plans and Specifications.

Conduct only one (1) burn-in period on the entire Contract for all wireless devices. Commence with the burn-in period only after meeting all of the following requirements:

- All work required in all Contract documents for the wireless system has been completed and inspected by the Engineer.
- Successfully complete the Post-Installation Wireless System Site Testing.

Commence with the burn-in period upon written authorization by the Department to commence. Terminate the burn-in period 30 consecutive days thereafter unless an equipment malfunction occurs, and it is determined through troubleshooting that the wireless equipment is at fault for the interruption of the device communication. Stop the burn-in period for the length of time any equipment is defective. After repairing the equipment so that it functions properly, resume the burn-in period at the point it was stopped. Successful completion and acceptance of the burn-in period will be granted on the 31st day unless any equipment has malfunctioned. If any equipment has failed during the burn-in period, final acceptance will be withheld until all the equipment is functioning properly for 15 days after repair. The burn-in period shall restart after all equipment has been replaced/repaired and tested. When a specific piece of equipment has malfunctioned more than three times during the 30 day burn-in period, replace that unit with a new unit at no cost to the Department.

Contractor Responsibilities

During the burn-in period, maintain all work under this Contract in accordance with the Specifications. Restore any work or equipment to proper operating condition within 12 hours after notification.

Department Responsibilities

Department responsibilities during the burn-in period will be as follows:

- Expeditious notification of Contractor upon failure or malfunction of equipment
- In the event that the Contractor does not provide the services enumerated above under his Contract responsibilities, the Department or its authorized agents may in the interest of public safety take emergency action to provide for adequate traffic control. Pay any costs incurred as a result of these emergency actions. Such action by the Department will not void any guaranties or warranties or other obligations set forth in the Contract.

Burn-In Period Acceptance

- The Department will make burn-in period acceptance after satisfactory completion of the required burn-in period and on the basis of a comprehensive field inspection of the complete wireless system in accordance with the Specifications. Upon burn-in period acceptance but prior to Final Acceptance of the entire Contract, maintain the complete wireless system in accordance with the specifications

926.3.07 Contractor Warranty and Maintenance

A. Warranties

Provide manufacturer’s warranties or guarantees on electrical, electronic, or mechanical equipment furnished, including all wireless radios, modems, antennas, power dividers, and all other devices supplied under this contract.

Ensure that warranties and/or guarantees are consistent with those provided as customary trade and industry standard practices; or as otherwise specified in the Plans, Standard Specifications, or Special Provisions.

Upon Final Acceptance, transfer the manufacturer and Contractor warranties or guarantees to the Engineer. Ensure that warranties are continuous and state that they are subject to transfer.

Acceptance or approval of the Work does not waiver warranties or guarantees where required by the Specifications. Final Acceptance will not be granted until all warranties and guarantees are received.

B. Guaranties

Repair and/or replace all equipment and material supplied under these Contract Documents which has been determined by the Engineer to not meet Specifications.

The Engineer reserves the sole right to determine suitability or unsuitability of the supplied equipment and material. The contractor shall bear the total cost of delivery and transportation related to the repair and replacement of equipment and material throughout the duration of the Contract unless otherwise approved by the Engineer.

926.3.08 Training

Provide training as required herein. Include with training all supplies, equipment, materials, handouts, travel, and subsistence necessary to conduct the training. Provide training agenda at least two months prior to requesting to conduct training.

A. Requirements

Provide installation, operations and maintenance training of the deployed wireless technology and applicable manufacturer software for up to 12 people. Include in this training both classroom training and hands-on-training. Limit in-shop training and field training to group sizes of four persons at a time. Conduct training in half-day sessions. Two half-day sessions may be held on the same day upon approval of the Department. The total training shall consist of at least 6 hours of training for each participant. Equipment provider is to determine the specific length of the training course but it may not be less than 6 hours. Provide a course content which includes as a minimum, the following:

- General theory of operation
- Operation of wireless communications equipment
- Programming of unit
- Results of the Site Survey identifying potential disruptions
- Discussion of warranties
- Hands-on use of equipment

Request to conduct training at least thirty days prior to first training session. The training schedule shall be approved by the Engineer. With request to conduct training provide a detailed course outline with training materials to be used. Arrange for and submit location of training for approval.

926.4 Measurement

The price bid shall include furnishing, installing, system integration and testing of a wireless communications system, including all radio chassis, antennas, antenna cables, modules, power cables, power supplies, manufacturer software, licenses, Outdoor rated Cat 5e patch cords, programming interface cables, media and power converters (if needed), surge protection devices, attachment hardware, repeater cabinets (if needed) testing and training requirements, and all work, equipment and appurtenances as required to provide a fully functional wireless communications system. The price bid shall also include all configuration software, programming device cabling, and system documentation to be turned over to the Engineer, including: shop drawings, operations and maintenance manuals, wiring diagrams, block diagrams, and other material necessary to document the operation of the applicable wireless radio system. This price shall be full compensation for all labor, tools, materials, equipment, and incidentals necessary to complete the work.

Wireless Training

Wireless Radio Training is measured as a lump sum for all supplies equipment, materials, handouts, travel and subsistence necessary to conduct the training.

926.4.01 Limits

Not Applicable.

926.5 Payment

Payment is full compensation for furnishing and installing the items complete in place according to this specification. Payment includes all compensation for furnishing labor, materials, tools, equipment, and incidentals required to complete the work.

No payment will be made for individual items unless a pay item is included in the plans for the specific item.

Payment will be made under:

Item No. 926	Spread Spectrum Wireless Transceiver with FSK & RS 232 connection, Type _	Per each
Item No. 926	Spread Spectrum Wireless Transceiver with RS 232 connection	Per each
Item No. 926	Self Contained Wireless Radio Repeater Station	Per each
Item No. 926	900 MHz Directional Radio Antenna and Connecting Cable	Per each
Item No. 926	900 MHz Omni Directional Radio Antenna and Connecting Cable	Per each
Item No. 926	900 MHz Antenna Power Divider	Per each
Item No. 926	Broadband Wireless Ethernet Radio	Per each
Item No. 926	Broadband Wireless Ethernet Radio Flat Panel Antenna	Per each
Item No. 926	Broadband Wireless Ethernet Radio Omni-Directional Antenna	Per each
Item No. 926	Broadband Wireless Ethernet Radio Sectoral Antenna	Per each
Item No. 926	Broadband Wireless Ethernet Radio Power Divider	Per each
Item No. 926	WiMax Radio Base Station Unit	Per each
Item No. 926	WiMax Radio Power Over Ethernet Injector	Per each
Item No. 926	WiMax Radio Subscriber Unit	Per each
Item No. 926	3G/4G Cellular Router Type _	Per each
Item No. 926	Wireless Training	Lump Sum

Section 934—Rapid Setting Patching Materials for Portland Cement Concrete

934.1 General Description

This section includes the requirements for rapid setting patching materials used in Portland cement concrete.

934.1.01 Related References

A. Standard Specifications

Section 886—Epoxy Resin Adhesives

B. Referenced Documents

AASHTO	ASTM
T 97	C 31/C31M
T 260	C 109/C 109M
	C 140
	C 666

Federal Hazardous Products Labeling Act

QPL 27

934.2 Materials

934.2.01 Rapid Setting Patching Materials

A. General Requirements

1. Use rapid setting patching materials that have the following characteristics:
   - Are nonmetallic.
   - Have a color similar to Portland cement concrete.
   - Can be mixed and placed like concrete.
   - Have accelerated hardening characteristics.
   - Yield a permanent patch in concrete that can withstand traffic within 2 hours.

   For a list of sources, see QPL-27.
2. Type I

   Use Type I to patch reinforced or nonreinforced horizontal Portland cement concrete surfaces.
3. Type II

   Use Type II to patch only nonreinforced horizontal Portland cement concrete surfaces.
4. Type III

   Use Type III to patch reinforced vertical or overhead Portland cement concrete surfaces.
5. Classify Type I, Type II, and Type III as follows:
   a. Class A, Premixed: Use these materials as received by adding water or an activator solution, according to the manufacturer's instructions.

NOTE: Do NOT add extra aggregate to Class A patching material without approval from the Office of Materials and Research.

b. Class B, Non-Premixed: These materials contain no aggregate. Add aggregate (fine and/or coarse) according to the manufacturer's recommendations

c. Class B, Non-Premixed: These materials contain no aggregate. Add aggregate (fine and/or coarse) according to the manufacturer's recommendations.

6. Type IV

Use elastomeric patching material to patch nonreinforced horizontal Portland cement concrete surfaces.

7. Type V

Use two-component cross linked resins to patch nonreinforced horizontal Portland cement concrete surfaces.

8. Type VI

Use cementitious, rapid setting, structural repair mortar to patch nonreinforced horizontal Portland cement concrete surfaces.

B. Phyiscal Requirements

1. Use Type I, Type II, and Type III patching materials that have been evaluated by the National Transportation Product Evaluation Program (NTPEP) or other approved test facility, and meet the following requirements.

Requirement	Measurement
Flow of Mortar, Type I and Type II	100% minimum
Type III	80% to 100%
Flexural Strength, Minimum	500 psi (3.5 MPa) in 24 hours
Compression Strength, Minimum	
2 hours	1,200 psi (8.5 MPa)
24 hours	3,000 psi (20 MPa)
7 days (moisture cure)	4,000 psi (27.5 MPa)
Absorption, Maximum	10%
Shear Bond, Minimum	200 psi (1.5 MPa) in 24 hours
Freeze Thaw Durability Factor	75% of the reference concrete after 300 freeze-thaw cycles
Total Chlorides	
Type I and Type III	0.6 lb/yd³ (0.4 kg/m³) maximum
Type II	No limits

C. Fabrication

1. Packaging

a. Package this material in strong, moisture-proof paper bags or other suitable containers that can withstand shipping, normal handling, and storage without breaking.

b. Clearly label each container of the components of a patching system with the following information:

- Component designation, if two components.
- Manufacturer's batch number.
- Mixing ratio and directions.
- Potential hazards and precautions displayed according to the Federal Hazardous Products Labeling Act.

D. Acceptance

1. Follow the mixing instructions of the manufacturer to create test specimens.
2. Air-cure all test specimens except for the 7-day moisture cure cubes.

3. Test Types I, II, and III using the following methods:

Test	Method
Flow of mortar	ASTM C 230
Flexural strength	AASHTO T 97
Compressive strength	ASTM C 109/C 109M or C 31/C 31M, whichever is applicable
Absorption	ASTM C 140
Shear bond strength	See Subsection 934.2.01.D, "Acceptance", Step 4
Rapid freeze thaw	ASTM C 666
Total chlorides	AASHTO T 260

4. Shear Bond Strength
   a. Place a Type II epoxy resin adhesive meeting the requirements of Section 886 on the surface of a cured mortar bar 16 x 3 x 3 in (400 x 75 x 75 mm).
   b. Cast a 16 x 2 x 0.5 in (400 x 50 x 13 mm) rapid-setting material patch in the center of the mortar base.
   c. Air-cure the test sample for 24 hours.
   d. Saw the mortar bar base and the cured rapid setting material patch into 2 in (50 mm) segments for testing.
   e. Use a holding device and plunger to apply a load at a rate of 0.05 in (1.3 mm) per minute to the patch until the patch fails.
   f. Read the load in pounds (newtons) on the plunger.
   g. Calculate the shear bond strength in pounds per square inch by dividing the load in pounds by the interfacial area of the patch in square inches. Calculate the metric equivalent for shear bond strength in MPa by dividing the load in newtons by gravitational acceleration (9.81 m/s^2).
5. Use Type IV, Type V and Type VI patching materials that have been evaluated by NTPEP, and received a subjective field rating of $\geq$ 4 on an ascending scale from 1 to 5.
6. The Department will reject a patching system that meets all the requirements of this Specification, but does not work as required in actual use.

E. Materials Warranty

Ensure that the material has a minimum storage life of at least 1 year under conditions of 40° to 90° F (4° to 32° C) and maximum relative humidity of 90 percent.

Section 935—Fiber Optic System

935.1 General Description

This work includes the installation of fiber optic cable and equipment including but not limited to cable, interconnect, patch cords, FDC interconnect cables/pig tails, any cable related hardware, connectors, splices, closures, temporary systems, testing, training, or any other fiber optic product as specified on the Plans, or noted in any other Section of these Specifications.

Provide all equipment and materials of like kind and function to be of the exact same manufacture, model, revision, firmware, etc.

Provide all equipment, materials, and work in accordance with all manufacturers' recommendations.

935.1.01 Definitions

General Provisions 101 through 150.

935.1.02 Related References

A. Standard Specifications

Section 150 – Traffic Control

Section 639 – Strain Poles for Overhead Sign and Signal Assemblies

Section 647– Traffic Signal Installation

Section 682 – Electrical Wire, Cable, and Conduit

Section 939 – Communication and Electronic Equipment

Section 940 – System Integration

B. Referenced Documents

Ensure fiber optic cable and equipment meet the requirements in the following documents:

1. Optical Fiber Standards
   a. EIA/TIA-492AAAA-A, "Detail Specification for 62.5 μm Core Diameter/125 μm Cladding Diameter Class IA Graded Index Multimode Optical Fibers", Current Edition
   b. EIA/TIA 492CAAB, “Detail Specification for Class IVa Dispersion-Unshifted Single-mode Optical Fibers with Low Water Peak”, Current Edition
   c. ITU-T G.652D, “Transmission Media Characteristics, Recommendations G.650-G.659”, for single-mode fibers
   d. Telcordia GR-20-CORE, “Generic Requirements for Optical Fiber and Cable, Current Edition
2. Fiber Optic Cable and Component Standards
   a. Telcordia GR-20-CORE, “Generic Requirements for Optical Fiber and Cable, Current Edition
   b. EIA/TIA-598-B.3, “Optical Fiber Cabling Components Standard”, Current Edition
   c. EIA/TIA-598-B, “Optical Fiber Cable Color Coding Standard”, Current Edition
   d. RUS 7 CFR 1755.900, “United States Department of Agriculture Rural Utilities Service (RUS) Standard 7 CFR 1755.900”, Current Edition
   e. Telcordia GR-326 Issue 3, “Generic Requirements for Single-mode Optical Fiber Connectors”, Current Edition
   f. EIA/TIA-604-XX, “Fiber Optic Connector Intermateability Standards (FOCIS)”, where XX specifies the fiber optic connector type (i.e., ST, SC, LC, etc.), Current Edition
   g. National Electrical Code Section 770
3. Fiber Optic Installation Standards and Practices
   a. Building Industry Consulting Service International (BICSI) Telecommunications Distribution Methods Manual (TDMM), Current Edition
   b. BICSI Customer-owned Outside Plant Methods Manual , Current Edition
   c. Society of Cable Telecommunications Engineers (SCTE), “Recommended Practices for Optical Fiber Construction and Testing”, Current Edition
   d. OSHA Regulations (Standards-29 CFR) 1910, “Occupational Safety and Health Administration Standards

e. ANSI/IEEE C2 National Electrical Safety Code

f. ANSI/NFPA-70 National Electrical Code

4. Fiber Optic Measurement and Testing Standards

a. EIA Standard FOP-II, Test Condition 1

b. Telcordia GR-196-CORE (Issue 2), "Generic Requirements for Optical Time Domain Reflectometer (OTDR) – Type Equipment", Current Edition

c. Applicable Flame Tests: UL 1581 and UL 1666 (Non-Plenum Applications)

d. Applicable Flame Test UL 910 (NFPA 262-2002) (Plenum Applications)

e. EIA/TIA-526-X, "Standard Test Procedures for Fiber Optic Systems", Current Edition

f. EIA/TIA-526-7 (OFSTP-7), "Optical Power Loss Measurements for Installed Single-mode Fiber Cable Plant"

g. EIA/TIA-526-14-A (OFSTP-14A), "Optical Power Loss Measurements for Installed Multimode Fiber Cable Plant"

935.1.03 Submittals

Prior to any work, obtain approval from the Engineer for the products and procedures to be used on the Project.

Use only equipment and materials that meet the requirements of these minimum specifications and are on the Department's Qualified Products List (QPL) Products appearing on the Qualified Products List (QPL) are exempt from normal submittal requirements. These products have been evaluated by the Office of Traffic Operations and have proven their capability of meeting the appropriate Georgia Department of Transportation Specification. Any of these products may be used without submitting catalogue cuts, sampling or pre-testing. The Contractor shall submit a letter to the Engineer, stating which QPL items they will use. The Engineer and/or department designee must ascertain that the construction item is the same material identified on the appropriate QPL and will acknowledge receipt of these items in the project diary or as required by the Construction Manual.

Submit submittal data for test procedures, and routine maintenance procedures required for the items furnished under this specification within sixty (60) calendar days after the Notice to Proceed and prior to any installation, unless noted otherwise in the Contract Documents.

Submit to the Engineer service and maintenance documentation for each item furnished under this specification. Provide two (2) bound hard copies and an electronic copy as pdf documents.

A. Cable Certification

Prior to installing any fiber optic cable on the Project, provide detailed information for the cable type, cable manufacturer, fiber content, design and installation procedure to the Engineer. Request approval by certification from an independent testing (third party) laboratory that certifies the fiber optic cable is the same as that on the Department's QPL.

B. Aerial and Underground Splice Closures Certification:

Provide certification from an independent testing laboratory that certifies that the splice closures are identical to those on the Department's QPL.

C. Fiber Distribution Center (FDC) Certification

Provide certification from an independent testing laboratory that certifies that the Fiber Distribution Centers provided are identical to those on the Department's QPL

D. Fiber Optic Test Documentation

Within 60 days from the NTP, provide the date, time and location of any tests required by this specification (see 935.3.06) to the Engineer at least 72 hours before performing the test. Provide two copies of documentation of the test results to the Engineer within 5 working days of completion of the test for review and approval, or else retest the represented fiber optic cable and provide the documentation within 5 working days of the retest. Bind the test documentation and include the following:

1. OTDR Set-Up: Cable & Fiber Identification

    a. Cable ID

    b. Cable Location - begin and end point

    c. End-to-end cable length in kilometers calculated from cable markings

    d. Fiber ID, including tube and fiber color

    e. Operator Name

    f. Date & Time

2. OTDR Test Parameters: Information to be recorded on each trace

    a. Wavelength

    b. Pulse width

    c. Refractory index

    d. Range

    e. Scale

3. Test Results

    a. OTDR Test

    - Total Fiber Trace distance in kilometers
    - Splice Loss attenuation in dB per km
    - Events > 0.01 dB
    - Trace analysis detailing all events exceeding 0.01 dB

Provide OTDR traces meeting Telcordia GR-196-CORE (Issue 2) data format requirements. With advance approval by the Engineer, an alternative format may be used, providing a licensed copy of the software is provided to the Department at no additional cost to the Department.

Provide all traces in electronic format to the Engineer.

At a minimum, ensure the data includes: cable ID, fiber number, buffer tube, FDC port, fiber distance, test wave length, attenuation in dB per km. Obtain data requirements for each project from the Engineer.

    b. Power Meter End – To – End Attenuation Test

- Perform this test on each fiber link using test procedures described in document EIA/TIA 526 sections 7 & 14A.
- For each test, document length, number and type of splices and connectors
- For each test, document link attenuation
- Provide test data to the Engineer in Excel or compatible spreadsheet form and on a CD.

E. As-Built Documentation

The as-built documentation shall meet all requirements in the Section 940 specifications. In addition to those requirements, the as-built documents shall include final splicing and fiber allocation details for every splice location.

935.2 Materials

Furnish and install all fiber optic parts, materials, components, and equipment consistent and compliant with the latest version or edition of the standards and industry practices specified in Section 935.1.02.B. If a conflict of difference exists between the requirements contained in the specified standards and practices and the requirements contained in these Specifications, use the most stringent material requirement for this contract. Notify the Engineer of any such conflicts or differences prior to procurement of materials and components.

A. Fiber Optic Cable

Ensure all fiber optic related products conform to this specification. Install, apply, inspect, and use those products in accordance with the manufacturer's standard operating and installation procedures and this Specification.

Ensure optical fiber used in both outside and inside plant cable conforms to the requirements specified herein as well as the industry standards and practices listed in Section 935.1.02.

Ensure all fiber optic cable on this project comes from a currently ISO9001 certified manufacturer who is regularly engaged in the production of this material using the processes noted within this Specification. All outside plant fiber optic cable used on each individual project shall be from only one manufacturer and manufacturer production batch.

Use only cable that is new (manufactured no more than eight months prior to the project Notice to Proceed) and of current design and manufacture.

Ensure that single mode optical fiber used in cables meets EIA/TIA 492CAAB, "Detail Specification for Class IVa Dispersion-Unshifted Single-mode Optical Fibers with Low Water Peak", Current Edition, and ITU-T G.652D, "Transmission Media Characteristics, Recommendations G.650-G.659", for single-mode fibers

Ensure that all optical fibers in the cable are usable fibers.

The fiber optic cable type, configuration, and installation method will be detailed on the Plans, Drawings, Details, Specifications and in the pay items. Ensure cable and cable installation conforms to all requirements within the Plans and Specifications.

B. Outside Plant (OSP) Cable

This section sets forth the general standards for fabrication and design of outside plant fiber optic cable.

1. OSP Cable Construction

    a. General Requirements: Ensure OSP cable is an accepted product of the United States Department of Agriculture Rural Utilities Service (RUS) as meeting the requirements of 7 CFR 1755.900. Only use optical fibers that are placed inside a loose gel-free buffer tube.

    b. Buffer Tubes: Ensure each buffer tube contains 12 fibers for all fiber optic cables unless specified otherwise. Ensure fibers cannot adhere to the inside of the buffer tube. Ensure the fibers utilize dry water-blocking materials and construction. Ensure the fiber optic cable includes loose buffer tubes that isolate internal optical fibers from outside forces and provides protection from outside forces and provide protection from physical damage as well as water ingress and migration.

    c. Cable Core: Protect the cable core with a water blocking material. Ensure water blocking material is non-nutritive to fungus, electrically non-conductive and homogenous.

    d. Strength Members: Use a central anti-buckling member consisting of a glass reinforced plastic rod to prevent buckling of the cable. Use high tensile strength aramid, fiberglass, or a combination of aramid and fiberglass yarns to provide tensile strength.

    e. Ensure color scheme meets EIA/TIA-598-B, "Color Coding of Fiber Optic Cable."

f. Cable Jacket: Include in the cable at least one ripcord under the sheath for easy sheath removal.

g. Helically strand the high tensile strength yarns evenly around the cable core.

h. Sheath all dielectric cables with medium density polyethylene. Ensure the minimum nominal jacket thickness is 0.06 in (1.5 mm). Apply jacketing material directly over the tensile strength members and water-blocking compound. Ensure the polyethylene contains sufficient carbon black to provide ultraviolet light protection and prevent the growth of fungus.

i. Ensure the jacket or sheath is free of holes, splits, and blisters.

j. Ensure the cable jacket contains no metal elements and is of a consistent thickness.

k. Marking: Mark cable jackets using the following template, unless otherwise shown in the Plans:

l. Manufacturer's Name - Optical Cable - Year - Telephone Handset Symbol – GA DOT - Description

m. For Description of Single-Mode Cable use: XXF SM where XX denotes the fiber count

n. Mark the cable length every meter, every 2 ft if marking the cable in English units. Ensure the cable length markings are within -0/+1% of the actual cable length.

o. Provide cable marking that is contrasting in color to the cable jacket. Provide cable marking with character heights of approximately 0.10 in (2.5 mm).

2. Additional Requirements for Loose Tube Cable

a. Use only cable that is all dielectric, loose tube design. Ensure buffer tubes are stranded around a central member using the reverse oscillation, or "SZ", stranding process.

3. Cable Performance

Ensure all OSP cable meets or exceeds the requirements of the Fiber Optic Test Procedure (FOTP) criteria referenced in 7 CFR 1755.900. Upon the request of the Department, provide certification from an independent testing laboratory certifying the cable conforms to the specifications and test procedures.

a. Pulling Tension: Ensure the cable can withstand a maximum pulling tension of 600 lbf (2.7 kN) during installation (short term) and 200 lbf (890 N) installed (long term).

b. Temperature Range: Provide only OSP cable designed to endure exposure to shipping, storage, and operating temperatures of -30 °F to +158 °F (-34 °C to +70 °C). Provide only OSP cable designed to endure exposure to installation temperatures of -20 °F to +140 °F (-30 °C to +60 °C).

C. Inside Plant (IP) Cable

This section sets forth the general standards for fabrication and design of inside plant fiber optic cable.

1. IP Cable Construction

a. Strength Members: For the strength member, use a high modulus U.S. manufactured aramid yarn. Ensure non-toxic, non-irritant talc is applied to the yarn to allow the yarns to be easily separated from the fibers and the jacket. For all IP cables used in plenum structures, use only IP cable that meets NEC UL-910 requirements for plenum rated cables.

b. Cable Jacket: Ensure the jacket to be continuous, free from pinholes, splits, blisters, or other imperfections. Ensure the jacket is smooth, as is consistent with the best commercial practice. Ensure the jacket provides the cable with a tough, flexible, protective coating, able to withstand the stresses expected in installation and service.

c. Use yellow cable jackets for single mode.

d. Design the cable jacket for easy removal without damage to the optical fibers by incorporating a ripcord under each cable jacket. Ensure that a non-toxic, non-irritant talc is applied to the aramid/fiberglass yarns to allow the yarns to be easily separated from the fibers and the jacket.

e. Ensure the nominal thickness of the cable outer jacket is sufficient to provide adequate cable protection while meeting the mechanical, flammability, and environmental test requirements of this document over the life of the cable.

f. Color: Use color coded individual fibers for identification. Ensure color coding complies with EIA/TIA-598-B "Optical Fiber Cable Color Coding" as stated in 935.2.B.1.e.

g. Marking: Mark the outer cable jacket at least every 3 ft (1 m) with the manufacturer's name or UL file number, date of manufacture, fiber type, flame rating, UL symbol, and sequential length marking (e.g. "62.5/125 MICRON Type OFNR - UL"). Use print color that contrasts to the color of the jacket and is permanent and legible for the life of the cable.

2. Fabrication by Cable Type

a. Interconnect Cables: Use interconnect cable to connect the distribution panels of a fiber optic cable plant with the actual electronic devices. Fabricate interconnect cable by surrounding the 900 μm tight buffered fibers with layered U.S. manufactured aramid yarns and a jacket of PVC or Copolymer depending on NEC requirements. Use the aramid yarns as tensile strength members.

b. FDC Interconnect Cable: Use this cable to splice a factory connectorized multifiber pigtail cable on to an OSP cable end, routing that cable within an FDC and its splice cabinet, and connecting to the termination panels of the FDC. Construct FDC interconnect cable of 900 μm tight buffered fiber (single mode or multi-mode optical fiber) surrounded with U.S. manufactured aramid fibers, and jacketed with flame retardant jacket material. Match the fiber count and buffer tube configuration of the FDC interconnect cable to be exactly equivalent to the OSP cable being terminated in the FDC, unless additional fibers (using other buffer tube colors) are required for an FDC that is larger than the OP cable. Use a yellow exterior jacket for the FDC interconnect cable for single-mode.

3. Temperature Range

a. Ensure the cable is designed to endure exposure to a storage temperature range of -30° F to +158° F (-34 °C to +70 °C) while stored on the original shipping reel. Ensure riser cables are designed to endure an operating temperature range of 0 °F to +158 °F (-18 °C to +70 °C). Ensure plenum cables are designed to endure an operating temperature range of 32° F to +160° F (0 °C to 71 °C).

4. Crush Resistance Requirements

a. Ensure the cable can withstand a minimum compressive load of 0.061 plf (0.89 N/m) applied uniformly over the length of the compressive plate. Use only cable that has been tested in accordance with FOTP-41, "Compressive Loading Resistance of Fiber Optic Cables."

5. Impact Resistance Requirements

a. Use only cable that can withstand a minimum of 20 impact cycles. Use only cable that has been tested in accordance with FOTP-25, "Repeated Impact Testing of Fiber Optic Cables and Cable Assemblies."

6. Flammability

a. Use only cables that are UL-listed in accordance with NEC, Article 770. Use only Riser cables (OFNR) that pass UL-1666. Use only Plenum cables (OFNP) that pass UL-910.

D. Patch Cords and FDC Interconnect Cables/ Pig Tails

1. Patch Cords

Use patch cords consisting of a length of fiber optic cable terminated on both ends. For all IP cables used in plenum structures, use only IP cable that meets NEC UL-910 requirements for plenum rated cables.

a. Fabrication: Ensure all factory preconnectorized assemblies adhere to the applicable cable, cordage, and fiber specifications stated in these Specifications.

b. Ensure all inside plant (IP) patch cords meet NEC jacketing requirements.

c. Use orange outer jackets for multimode and yellow jackets for single mode.

d. Use connector boots of two (2) colors for all duplex patch cords, zip cord or round. Use white or off white for one leg of the duplex cord (non-printed zip leg) and red for the opposite leg (printed zip leg) of the duplex cord.

e. For all assemblies for outside plant (OSP) where loose tube is used, include a fan-out kit installed at each connectorized end.

f. No splices of any type are allowed within a patch cord assembly.

g. Factory testing: Fully test each assembly and place those test results on a test tag for each mated pair of connectors. Attach the tag to one end of each pair within the assembly.

h. Individually package each assembly within a plastic bag and clearly mark on the outside of that bag the submitted manufacturer's part number.

2. Factory Connectorized FDC Interconnect Cables/Pig Tails

a. Use FDC interconnect cables/pig tails consisting of a length of fiber optic cable of one single fiber terminated on one end. Use only FDC interconnect cables/pig tails with factory installed connectors in accordance with Subsection 935.2.F. Provide FDC interconnect cables/pig tails with 900 micron tubing or 3 mm fan out tubing as required for the application. Use FDC interconnect cables/pig tails with 900 micron tubing only when fully enclosed within an FDC. Ensure that the other end of the cable is properly prepared for splicing to another cable. Provide FDC interconnect cable/pig tail in conformity with the same construction and testing requirements as patch cords.

E. Drop Cable Assembly – Outside Plant

Drop cable assembly is defined as a connectorized fiber optic cable (drop cable) and appropriate fan out (if required) used for connectivity between a primary fiber trunk or feeder cable and field devices such as signal controllers, closed circuit television cameras, video detection system cameras, changeable message signs, etc.

1. General Requirements

Provide a loose tube design drop cable in the drop cable assembly meeting the requirements for outside plant cable as specified in Subsection 935.2.B. Provide the drop cable assembly type (multimode, single-mode or hybrid) and fiber count specified in the Plans.

2. Assembly Fabrication

Provide a drop cable assembly as specified in the Plans and meeting the following requirements. Use only drop cables that are factory pre-terminated, use splice-on factory-connectorized pigtails/FDC interconnect cables, or are included in pre-terminated FDCs. For factory pre-terminated drop cable assemblies, label each individual fiber with its drop cable fiber number (“1,” “2,” etc.) on a self-laminating clear overwrapping label on the fan-out tubing within 2 in. (50 mm) of the terminating fiber connector.

a. Pre-terminated Drop Cable Assembly: Install pre-terminated drop cable assemblies with loose tube design fiber optic cable, factory-installed fiber optic connectors in accordance with Subsection 935.2.F on each drop cable fiber, and factory-assembled fan outs with 3 mm fan out tubing.

b. Field-spliced Drop Cable Assembly: Install field-spliced drop cable assemblies with loose tube design fiber optic cable, fusion spliced factory-connectorized pigtails/FDC interconnect cables, in accordance with Subsection 935.2.D and Subsection 935.2.F on each drop cable fiber.

c. Fan Out - Loose Tube Cable Design: Install field-installed fan outs with 3 mm fan out tubing in accordance with Subsection 935.3.05.J. Additionally, secure the fan out tubing to the main cable sheath in a hard epoxy plug transition that extends a minimum of 2.0 in (50 mm) onto the cable and 2.0 in (50 mm) onto the 3 mm tubing.

F. Fiber Optic Connectors

Furnish and install LC compatible connectors unless otherwise specified, Use ceramic ferrule ultra polish connectors (UPC) for single-mode applications for all connector types. Install connectors as per manufacturer application and recommendations, including proper termination to the outer-tubing.

Use UPC connectors rated for an operating temperature of -40 °F to +167 °F (-40 °C to +75 °C).

Use only factory-installed UPC connectors for all applications except where shown in the Plans for specifically permitted applications in accordance with 935.2.E.2. Use factory-installed UPC connectors installed with a thermal-set heat-cured epoxy and machine polished mating face. Do not use field-installed fiber optic connectors.

Where barrel couplers are used in passive termination applications such as FDCs, use only ST compatible ceramic-insert couplers. Use only manufacturer recommended single-mode couplers for single-mode connector applications. Provide dust caps for both sides of couplers at all times until permanent connector installation.

Provide connectors listed below that do not exceed the maximum loss listed for each connector.

Connector Type	Installation	Max. Loss	Typical Loss	Optical Return Loss
Single-mode	Factory	0.50 dB	0.25 dB	>55 dB

G. Splice Closure - Underground

1. Use

Provide closures designed for use under the most severe conditions such as moisture, vibration, impact, cable stress and flex temperature extremes. Ensure splice closures meet or exceed minimum physical requirements listed in the following subsection:

2. Physical Requirements

a. Use cylindrical closures or rectangular dome type closures with cable entries at one end only and sealed one-piece high-density polyethylene dome bodies.

b. Ensure splice closures are suitable for ECB or pull box applications as shown in the Plans.

c. Ensure splice closures prevent the intrusion of water without the use of encapsulate.

d. Ensure splice closure cable entry ends have flexible thermoplastic rubber end seals with pre-template cable ports.

e. The closure size shown in the Plans specifies the number of splices to be accommodated by the closure. With the closure, provide all materials to accommodate the number of splices specified by the closure size, including splice tray, storage, and organizing materials.

f. Provide splice closures capable of accommodating splice organizer trays that accept mechanical, fusion, or multi-fiber array splices. Use splice closures having provisions for storing fiber splices in an orderly manner, mountings for splice organizer assemblies, and space for excess or non-spliced fiber. Use splice organizers that are re-enterable and re-sealable.

g. Use only UL rated splice cases. Where high fiber count (144 to 432) splice cases are required, use cases that have an external pressurization port for optional pressurization.

h. Provide splice closures that do not require the use of specialized tools, equipment, or additional parts for re-entry and subsequent reassembly.

i. Provide splice closures with provisions for controlling fiber bend radii to a minimum of 1.5 in (38 mm).

H. Splice Closure - Aerial

1. Use

a. Provide splice closures designed for use in aerial applications and conform to the requirements below:

2. Physical Requirements

a. Use cylindrical closures or rectangular dome type closures with cable entries at one end only and sealed one-piece high-density polyethylene dome bodies. Provide splice closures designed for free breathing splice protection without the use of encapsulate. Provide splice closures designed as fully assembled weather tight closures. Ensure splice closure cable entry ends have flexible thermoplastic rubber end seals with pre-template cable ports.

b. Provide splice closures utilizing corrosion resistant aluminum or stainless steel hardware. Provide splice closures designed in such a way as to allow complete splice access after closure placement, without requiring removal of the closure or electrical bonds from the cable. Provide splice closures suitable for straight, butt or branch splices. Provide splice closures that include provisions for strain relief, both around the cable jacket and to internal cable strength members. Provide aerial closures designed in such a manner that shall eliminate the need for drip collars and sealing collars.

c. The closure size shown in the Plans specifies the number of splices to be accommodated by the closure. With the closure, provide all materials to accommodate the number of splices specified by the closure size, including splice tray, storage, and organizing materials.

d. Ensure all closures are the appropriate size to accommodate the number and type of fiber cables used and fit within the space available.

3. Optical Fiber Organizer

The fiber organizer is a system that holds splice or organizer trays in such a way as to protect and support cable splices within an environmentally protected area. Provide organizer trays capable of storing all common splices; fusion and mechanical, in all configurations; butt, inline and branch (with up to four branch cables). Ensure all trays are completely re-enterable. Ensure organizers themselves accept a minimum of four trays, and provide bonding and grounding hardware.

I. Mechanical Lab Splice

Insertion Loss:

Single Mode < 0.30 dB

Operating Temperature:

-23 °F to 77 °F (-31 °C to 25 °C)

J. Fiber Distribution Center (FDC)

1. Use rack-mount, wall-mount, or pre-terminated FDCs as specified in the Plans. Use rack-mount, wall-mount, or pre-terminated FDCs in all field cabinets, including all types of ITS and traffic signal cabinets, unless specifically excepted in the Plans.

2. Use rack-mount and wall-mount FDCs and FDC splice cabinets with enclosures and mounting components of metallic construction. Use FDC interconnect cable for all OP cable terminations in rack-mount and wall-mount FDCs unless otherwise specified in the Plans.
3. Use FDCs that fit standard 19 inch EIA equipment racks or cabinets.
4. Use rack-mount FDCs of specified sizes 6-fiber through 24-fiber having front-opening swing-out drawers for access to fiber splicing trays and fiber termination couplers. When closed, ensure swing-out drawers provide dust-tight seals completely enclosing fiber splicing trays, fiber termination couplers, and connecting ends of fiber patch cords connected to couplers.
5. Use rack-mount FDCs of specified sizes 36-fiber through 60-fiber having fixed-mounted front-facing fiber termination couplers accessible behind a removable transparent plastic dust cover.
6. Use FDC's that are sized to fit within the available space of the cabinet.
7. Use rack-mount FDCs of specified sizes 60-fiber through 144-fiber that include a separate FDC splice cabinet installed adjacent to the FDC. Alternately, rack-mount FDCs with splice cabinets integral to the overall FDC enclosure but contained in a separated compartment either above or below the FDC termination couplers.
8. Provide rack-mount or wall-mount FDCs with appropriate quantities of couplers, panels, splice trays, organizers, factory-connectorized pigtails/FDC interconnect cables, and ancillary materials to terminate the number of fibers as specified by the FDC size, regardless of the cable size to be terminated as shown in the plans. Use only FDC interconnect cables for FDCs 30-fiber and larger. Where factory pre-terminated drop cable assemblies are permitted and to be used, do not provide splice trays.
9. Use pre-terminated FDCs that are factory manufactured assemblies of fiber optic drop cable with factory-installed fiber connectors and integral ruggedized fiber connector enclosures. Use pre-terminated FDCs of the sizes specified in the Plans. Use ruggedized fiber connector enclosures of thermally stable rigid plastic housings fully potted with a thermally stable epoxy filling that encapsulates the drop cable fan out, fibers and connector bodies. Use permanent labels on the enclosure with contrasting color to identify each connector body by its associated fiber number.
10. For FDCs of all types, provide couplers with dust caps in accordance 935.2.F. Use only LC compatible couplers unless otherwise specified.

K. Fiber Optic Snowshoes

Use industry standard fiber optic snowshoes that are factory-manufactured fiber optic cable storage brackets designed for aerial installation on messenger wire cable support spans.

935.2.01 Delivery, Storage, and Handling

Package the cable for shipment on reels. Each package shall contain only one continuous length of cable. Construct the packaging so as to prevent damage to the cable during shipping and handling.

Seal both ends of the cable to prevent the ingress of moisture.

Attach to each reel, a weatherproof reel tag identifying the reel and cable in such a manner to ensure the manufacturing history of the cable and the fiber can be traced by the manufacturer.

Include with each cable a cable data sheet containing the following information:

1. Manufacturer name
2. Cable part number
3. Factory order number
4. Cable length

5. Factory measured attenuation of each fiber
6. Bandwidth specification (where applicable)
7. Index of refraction

935.3 Construction Requirements

Ensure all fiber optic parts, materials, components and equipment installed on this contract are consistent and compliant with the latest version or edition of the standards and industry practices specified in Section 935.1.02.B. If a conflict of difference exists between the requirements contained in the specified standards and practices and the requirements contained in these Specifications, use the most stringent material requirement for this contract. Notify the Engineer of any such conflicts or differences prior to procurement of materials and components.

935.3.01 Personnel

General Provisions 101 through 150.

935.3.02 Equipment

Furnish a portable fiber optic light source and power meter test set for testing the fiber optic cable. Provide a test set matched, calibrated and referenced to work as a synchronized test system.

Retain ownership of this equipment.

935.3.03 Preparation

General Provisions 101 through 150.

935.3.04 Fabrication

General Provisions 101 through 150.

935.3.05 Construction

A. OSP and IP Cable Installation

Secure from the cable manufacturer the construction and installation procedures to be used on the project. Produce a detailed construction and installation procedure (SOP) covering all aspects of the construction and installation process for each and all specific cable to be used on this project. Submit the SOP to the Engineer for review and approval.

B. Cable Installation Procedures and Standards

1. Safety Precautions

   Follow all appropriate OSHA and industry standards related to safety when working in manholes or underground vaults and when handling optical fibers.

2. Cable Handling

   Install all fiber optic cable according to the manufacturer's recommended procedures and these specifications.

3. Pulling Tension

   Do not exceed the maximum recommended pulling tension during installation as specified by the cable manufacturer.

4. Allowable Bend Radius

   Do not violate the minimum recommended bend radius during installation as specified by the cable manufacturer. Unless the manufacturer's recommendations are more stringent, use the following guidelines for minimum bend radius:

20 X Cable Diameter	Short Term - During Installation
10 X Cable Diameter	Long Term - Installed

5. Cable Installation Guidelines

   Before the installation begins, carefully inspect the cable reels for imperfections such as nails that might cause damage to the cable as it is unreeled.

   Take all necessary precautions to protect reeled cable from vandals or other sources of possible damage while unattended. Any damage to the cable sections may require replacement of the entire section.

   Whenever unreeled cable is placed on the pavement or surface above a manhole, provide means of preventing vehicular or pedestrian traffic through the area in accordance with Section 150 of the Specifications.

   Use the "figure-eight" cable lay configuration to prevent kinking or twisting when the cable is unreeled or backfed. Do not coil fiber optic cable in a continuous direction except for lengths of 100 ft (30 m) or less. When "figure-eighting" cable, exercise care to relieve pressure on the cable at the crossover of the eight. This may be done by placing cardboard shims at the crossover or by forming a second "figure-eight".

   Keep the cable continuous throughout the pull. Cable breaks are allowed only at designated splice points.

   Where messenger cable is required, as shown in the Plans, lash aerial fiber optic cable to a steel strand wire messenger cable of the size specified in the plans that conforms to Georgia Department of Transportation Specification 915.02.

6. Cable End Sealing

   Where a cable ends without termination in a fiber optic closure, seal the end of the cable by re-using a cable end cap shipped with a cable reel, or use a cap that is size-matched to the cable to be sealed. Clean the end of the cable. Partly fill the cap with a waterproof silicone adhesive sealant and press the cap fully onto the cable end, rotating the cap to fully encapsulate the cable end with the sealant in the cap. Apply a full sealant bead between the end of the cap and the cable jacket.

C. Cable Storage

At designated intervals throughout the cable plant, pull and store excess cable for slack for future terminations or splicing.

Properly store all cable to minimize susceptibility to damage. Maintain proper bend radius, both short and long term, during cable storage.

Communication and Pull Boxes: Store the excess or slack cable in the pull box or communication box in accordance with the Plans details.

Hub/TMC/TCC: Properly store the cable in cable troughs and plenum applications which meet NEC requirements.

Aerial Installations: Store the excess or slack cable at storage loops in a “bow tie” configuration on the messenger strand using two fiber optic snowshoes (aerial fiber cable storage brackets) that maintain the proper bend radius in the fiber cable. Install one fiber optic snowshoe for drop cable and trunk cable storage at aerial splice closures to maintain the proper bend radius in the fiber optic cable.

In Cable Storage Requirements - Underground (OSP) & IP

Unless otherwise noted on the plans, the following are the requirements for cable storage for underground and IP applications:

a. Pull Box – (Types 4, 4S, 5, 5S, 6, and 7) Apply the following storage requirements for the indicated cable/closure situations.

   - Drop cable with no closure – 10 ft. (3 m)
   - One or more trunk cables with no closure – 110 ft. (34 m) of each cable

- Two or more trunk cables with one closure – store 55 ft. (17 m) of each trunk cable so that the closure can be removed from the pull box approximately 55 ft. (17 m). If a drop cable is spliced to the trunk cable at this point, store 55 ft. (17 m) of each drop cable.
- One trunk cable with one closure – 110 ft. (34 m) Install closure in the center of the 110 ft. (34 m) cable loop, so that the closure can be removed from the ECB approximately 55 ft. (17 m). If a drop cable is spliced to the trunk cable at this point, store 55 ft. (17 m) of each drop cable.
- One trunk cable with one closure and trunk cable ends – 95 ft (30 m). Install closure on the trunk cable at 55 ft (17 m) from the pull box. If a drop cable is spliced to the trunk cable at this point, store 55 ft (17 m) of each drop cable.
- Trunk cable ends with no closure – 95 ft. (30 m)

b. Hub Building (interior) – Do not store slack cable inside the hub building.

c. Hub Building (exterior adjacent ECBs) – 180 ft (55 m)

d. Traffic Control Center & Transportation Management Center (OSP splice vault) – 180 ft (55m).

e. Traffic Control Center & Transportation Management Center (IP at equipment room) – cable entrance to distribution panel bay plus 20 ft (6 m)

f. Electrical Communication Box (ECB) - (Types 3, 4, 5, and 6) Apply the following storage requirements for the indicated cable/closure situations. More than one situation may occur in a single electrical communication box, in which case apply each appropriate requirement.

- Trunk cable with no closure – 110 ft (34 m)
- Trunk cable with one closure – 110 ft (34 m). Measure the storage amount from the top of the ECB manhole opening. Install closure in the center of the 110 ft (34 m) cable loop, so that the closure can be removed from the ECB approximately 55 ft (17 m). If a drop cable(s) is spliced to the trunk cable at this point, store 55 ft (17 m) of each drop cable.
- Trunk cable with one closure and trunk cable ends – 95 ft (30 m). Install closure at 55 ft (17 m) from the ECB on the trunk cable. If a drop cable(s) is spliced to the trunk cable at this point, store 55 ft (17 m) of each drop cable.
- Trunk cable ends with no closure – 95 ft (30 m)

2. Minimum Cable Storage Requirements - Aerial Applications

Unless otherwise noted on the plans, the following are the minimum requirements for cable storage for aerial applications:

a. Install a minimum 150 ft (45 m) storage loop approximately one half the distance between every equipment drop or as shown in the Plans. Where equipment drops are greater than 1000 ft (300 m) apart, install a minimum 150 ft (45 m) storage loop for every 1000 ft (300 m)of uninterrupted cable length.

b. At aerial splice closures, install 75 ft. (23 m) of drop cable storage and 150 ft. (45 m) of trunk cable storage, unless otherwise noted in the Plans, to allow the fully assembled closure, including the trunk cable and drop cable, to be lowered to ground level for maintenance purposes.

D. Cable Splicing

Splice together each individual reel of fiber optic cable to provide the continuous length of installed cable called for on this Project. Splice cable only at splice points designated on the plans or at locations approved by the Engineer. Make no splices within a patch cord assembly or drop cable.

E. Mid Span/Drop Access

At points where mid span/drop access is required, keep all fibers intact except those being accessed for the equipment drop. Use a suitable tool for removing fibers from the buffer tube to prevent damage to the fibers remaining intact.

F. Connector Termination Procedures

Only use procedures for the termination of the connectors meeting the process set out in that connector manufacturer's standard operating procedure (SOP) for the field installation.

G. Cable Marking

1. Materials

   a. Use 2-1/2" (63.5 mm) wide, 4" (100 mm) long, wrap-around type cable markers suitable for underground and aerial use. Use UV stabilized marker material and printing inks to provide an aerial durability of at least five years.

   b. Print text in bold black type on orange or yellow PVC markers, as specified in Section 935.3.05.G.2. Fabricate markers from PVC base material with a minimum thickness of 0.015" (0.38 mm). Pre-print the following text, or alternate text shown in the Plans, legibly on markers used for all cables:

   c. Cable ID: XXXXXXX
   GA DOT
   Optical Cable

   d. Where XXXXXXX is the appropriate cable ID as defined in the Plans. Print the text specified above twice on every cable marker with the text of the second image reversed and abutting the first image. in such a manner to ensure the text “reads right” when either short edge of the cable marker is held horizontally upright.

2. Installation

   a. Clean the installed cable of all dirt and grease before applying any marker. Follow the marker manufacturer’s recommended procedure for applying cable markers. Mark all cables in or at every communications hub, electrical communications box, pull box, handhole, equipment cabinet, aerial or underground splice closure, pole attachment, aerial storage bracket, and pole conduit riser entrance. At every trunk cable termination, reel end-to-reel end splice, electrical communications box, pull box, handhole, equipment cabinet, aerial splice closure, and aerial storage bracket, record the cable distance markings from the printline for the cable entry and exit, along with the exact location by Station Number or location name. Record the cable distance markings in a tabular format approved by the Engineer or on a documentation form provided by the Department.

   b. Place cable markers in the following locations:

      - within 18 in (460 mm) of every cable entry to a pull box, handhole, ECB and hub building
      - within 6 in (150 mm) of every cable entry or termination in an equipment cabinet
      - within 18 in (460 mm) of every splice closure at cable entry points
      - within 6 in (150 mm) of every FDC or splice cabinet in a hub building in which a cable terminates or enters
      - every 20 ft (6 m) for the length of a cable in maintenance coils in electrical communications boxes or pull boxes
      - within 12 in (0.30 m) of every pole attachment, aerial storage bracket, and pole conduit riser entrance

   c. Use orange markers at all locations, except as noted below:

   d. Where a trunk cable enters and leaves a closure (mid-span cable entry or end-to-end splice), use orange markers for one leg of the trunk cable and yellow for the other leg, placing corresponding color labels at the closure end of a leg and at the conduit entrance (underground installation) or span attachment (aerial installation).

   e. Where two drop cables terminate in a closure, use orange markers for one drop cable and yellow markers for the other drop cable, throughout the entire drop cable’s length to its other termination.

H. Fusion Splicing

1. Use

   a. Unless otherwise noted, fusion splice all fiber optic splices in accordance with industry codes and the latest version of the manufacturer's recommended guidelines.

2. Procedure

   a. Perform all fusion splicing and install all splice enclosures according to the manufacturer's recommended guidelines.

3. Splice Protection

4. Adequately protect all fusion splices in splice trays or organizers in an enclosure. When splicing inside a building; use a splice center where rack or wall space is available.

5. Provide the splice with strain relief and protection of the stripped fiber splice in a manner recommended by the splice tray or organizer manufacturer. Use splice types compatible with the tray design.

6. Protect fusion splices with a heat shrink tubing that protects the splice and extends over the fiber coating. Do not leave bare fiber exposed.

I. Mechanical Splicing

1. Use

   Do not use mechanical splices for any purpose other than a temporary connection to fiber optic test equipment. Obtain the Engineer's prior approval for any other use of a mechanical splice.

2. Procedure

   Make all mechanical splices as strain relief/locking types requiring no adhesive or polishing of the fiber ends. Ensure the fibers are self-aligning upon the closing of the mechanical splice. Ensure the splice consists of one piece construction. Ensure there is no stress on the fiber in the alignment area.

   Install all splice closures according to the manufacturer's recommended guidelines.

3. Lab Splice

   Use a mechanical fiber optic lab splice when a temporary joining of two fibers is required, such as in the testing of non-terminated fiber. Ensure the lab splice is re-usable for up to 50 matings. Ensure the lab splice accommodates optical fibers with cladding diameters between 120 and 145 μm.

J. Splice Closures

Install splice closures according to all manufacturers' recommendations. Install splice closures where shown in the Plans and in the approximate center of fiber cable storage coils. Securely mount all splice closures in ECBs or pull boxes to cable rack hooks or mounting brackets.

K. Fiber Optic Cable Fan Out

1. Inside Plant

   Provide all inside plant cable with a fan out in accordance with the manufacturer's recommended guidelines.

L. Temporary Fiber Optic Cable

1. Furnish and install temporary fiber optic cable systems as shown in the Plans. Furnish temporary fiber optic cable as continuous length cable; do not splice remnant cables together. Terminate cables and patch cords as required in the Plans. Splice the cable along cable route at the points indicated in the Plans.

M. External Transceivers

1. Shelf mount external transceivers in a manner that does not restrict the replacement of other components in the cabinet housing. In Type 170 traffic cabinets, mount the transceiver on an aluminum shelf permanently attached to the EIA 19" cabinet rack in the rear of the cabinet.

N. Fiber Distribution Center (FDC)

1. Do not install mechanical splices or field installed connectors. Equip unused panel slots with blank panels. Provide inter-cabinet and inter-bay bend radius and jumper management on each side of the FDC. Install all hardware according to the manufacturer's recommended procedures and Department standards. Determine specific hardware sizing from the project documents.
2. For rack-mount and wall-mount FDCs, array connectors in a vertical pattern with number one being at the top left position.
3. Prior to manufacture of pre-terminated FDCs, verify the final installed location of all portions of each drop cable route from the splice closure to the equipment cabinet (including but not limited to the cabinet location, all conduit and pullboxes, and the splice closure location) to determine the required length of drop cable, including all splice closure and storage coils, to be factory manufactured with each FDC. Mount the pre-terminated FDCs with the connectors horizontal or facing downward, and route the drop cable up or down as necessary. Route and secure the drop cable beside or behind the cabinet side panel such that it is fully strain-relieved, does not violate the manufacturer's recommended bending radius, and does not interfere with the operation of or access to any cabinet equipment or electrical components.

935.3.06 Quality Acceptance

A. Fiber Optic Cable

1. Installation Test
   a. Test the fiber optic cabling installed on this project according to the fiber's assigned use as shown in the plans and as specified below:
   b. Upon completion of the cable installation, splicing, and termination, and a minimum of fourteen days before equipment hookup, test all terminated fibers and spare fibers for continuity, events above 0.10 dB, and total attenuation of the cable. In the event that fiber optic cable installed on the project is connected to existing fiber optic cable, perform installation testing on both terminated fibers and spare fibers of the new cable and existing fibers to which the new fibers are spliced or connected. Submit both printed and electronic optical time domain reflectometer (OTDR) traces as specified in Subsection 935.1.03.
2. Test Requirements
   a. OTDR Test: For all fiber links, test and document the installation using OTDR testing.
   b. Conduct installation testing with a certified technician using an optical time domain reflectometer (OTDR) and optical source/power meter. The technician is directed to conduct the test using the standard operating procedure as defined by the manufacturer of the test equipment. Use an OTDR capable of performing standard OTDR functions, including the ability to display individual loss/gain in dB per km, as well as display all 2-point dB loss cursors to allow isolating and viewing any and all points along a given fiber distance.

c. Use a factory patch cord of a length equal to the "dead zone" of the OTDR to connect the OTDR and the cable. Optionally, the Technician can use a factory "fiber box" of 325 ft (100 m) minimum with no splices within the box.

d. Conduct the tests at 1310/1550 nm for single mode cable.

e. Attenuation Test: For all single mode and multi-mode fiber links, test and document attenuation by a standard power-meter test.

f. For every fiber installed or connected to, perform end-to-end attenuation test. For the test, use a calibrated optical source and power meter using the standard three-stage procedure. Determine acceptable link attenuation by the cumulative value of standard losses based on length, number and type of splices and connectors.

3. Fiber Optic Cable Acceptance

a. Use the following criteria for acceptance of the cable:

b. Provide test results demonstrating the dB/km loss does not exceed +3% of the factory test or 1% of the cable's published production loss. Consider the error rate for the test equipment in the test.

c. No event can exceed 0.10 dB. If any event is detected above 0.10 dB, replace or repair that event point.

d. The total dB loss of the cable, less events, cannot exceed the manufacturer's production specifications as follows:

Cable Type	Max. Attenuation dB/km	Test Wavelength
Singlemode	0.30	1550 nm
	0.40	1310 nm

e. If the total loss exceeds these specifications, replace or repair that cable run and assume all expenses, both labor and materials. Elevated attenuation due to exceeding the pulling tension during installation will require the replacement of the cable run at no expense to the Department for either labor or materials.

f. NOTE: The Department may allow the "bi-directional/averaging" process of OTDR testing, particularly when splice losses are being unfavorably affected by "mode field diameter misalignment," "core off-set" or "core misalignment."

B. Fusion Splicing

Ensure that the maximum splice loss for any fusion splice does not exceed 0.10 dB.

C. Mechanical Splicing

Ensure the maximum splice loss for mechanical splices does not exceed 0.70 dB. As noted in this specification, mechanical splicing is only allowed when approved by the Engineer for temporary applications.

D. Fiber Distribution Center (FDC)

Test all completed and assembled pre-terminated FDCs at the point of manufacture and provide two copies of the manufacturer test documentation. Test each connecterized fiber in the pre-terminated FDC to demonstrate compliance with all requirements for cables and connectors as detailed in other subsections of these specifications. Include in the test documentation the location station number where the FDC is to be installed, the serial number of the pre-terminated FDC, the drop cable footage markings at each end of the drop cable, and the total drop cable distance. Place one copy of the manufacturer test documentation in the equipment cabinet drawer where the pre-terminated FDC is installed, and submit the other copy to the Engineer.

935.3.07 Contractor Warranty and Maintenance

Provide a one year manufacturer support (usual and customary warranties) period for all fiber optic cable materials furnished and installed as part of the fiber cable system. Include in warranty and support all contractor or manufacturer activities related to maintenance, removal and replacement of cabling, closures and other fiber optic system materials during the period of support. Begin the Manufacturer warranty support period upon successful completion of the Fiber Optic Quality Acceptance testing as outlined in Subsection of 935.3.06. Ensure all Manufacturer warranties are continuous throughout the period and state that they are subject to transfer to the Department.

935.4 Measurement

Fiber optic system, temporary fiber optic system, testing and training complete, in place, accepted and of the kind, size, and type specified is measured as follows.

A. Outside Plant Fiber Optic Cable

Outside Plant fiber optic cable is measured for payment by the actual number of linear feet installed, complete, functional, and accepted. Fiber optic cable shall include but is not limited to all required fiber optic connectors, fiber optic snowshoes, marking and labeling, patch cords and other ancillary items as required for a complete fiber optic installation.

B. Inside Plant Fiber Optic Cable

Inside Plant fiber optic cable is measured for payment by the actual number of linear feet installed, complete, functional, and accepted. Fiber optic cable shall include but is not limited to all required fiber optic connectors, marking and labeling, patch cords and other ancillary items as required for a complete fiber optic installation.

C. Closures

Underground splice closures, aerial splice closures, and FDCs are measured for payment by the actual number of units installed, complete, functional and accepted. Closures shall include but are not limited to all required mounting and fastening hardware, fiber optic connectors, FDC interconnect cables/pigtails, marking and labeling, patch cords and other ancillary items as required for a complete closure installation.

D. Fiber Optic Splice, Fusion

Fiber optic splices, fusion, are measured for payment by the actual number of splices made, complete, and accepted. Fiber optic splices associated with the use of factory-connectorized FDC interconnect cables/pigtails on drop cables, in accordance with Section 935.2, will not be measured separately for payment. Mechanical splicing for temporary applications shall be included in other work and will not be measured separately for payment

E. Temporary Fiber Optic System

Payment for work on the Temporary Fiber Optic System will be a lump sum project bid price and will be considered full compensation for all installed materials and labor associated with the Temporary Fiber Optic System. Specific items include but are not limited to timber poles, guys, anchors, lashing, messenger cable, conduit directional boring, conduit, fiber optic cable, fusion splicing, hardware attachments, splice enclosures, equipment rentals, and disposal of materials.

F. Transceivers

External drop and repeat transceivers and external star transceivers are measured for payment by the number actually installed, complete, functional, and accepted.

For each unit installed, furnish and install all mounting and interconnection materials, including but not limited to card cages, hardware, fiber and RS-232 jumper cables, RS232/485 converters, and power supply cables at no separate cost to the Department.

935.4.02 Limits

General Provisions 101 through 150.

935.5 Payment

Outside and inside fiber optic cable, FDC interconnect cables/pig tails, splice closures, splices, temporary fiber optic system, transceivers, and testing are paid for at the Contract Unit Price for the various items. All other required items including; FDC interconnect cables/pigtails, fan-out kits, fiber optic connectors, fiber optic snowshoes, and other ancillary items for a completed fiber optic system shall be included as part of the below pay items. No separate payment shall be made for these items. Payment is full compensation for furnishing and installing the items complete and in place according to this Specification.

Payment for all items of this Section is as follows:

Payment will be made under:

Item No. 935	Outside Plant Fiber Optic Cable (type, mode, size)	Linear Feet (Linear Meter)
Item No. 935	Inside Plant Fiber Optic Cable (type, mode, size)	Linear Feet (Linear Meter)
Item No. 935	Fiber Optic Closure (type, size)	Per Each
Item No. 935	Fiber Optic Closure, FDC Pre-Terminated (type, size)	Per Each
Item No. 935	Fiber Optic Splice, Fusion	Per Each
Item No. 935	External Transceiver (mode)	Per Each
Item No. 935	External Star Transceiver (mode)	Per Each
Item No. 935	Temporary Fiber Optic System	Lump Sum

935.5.01 Adjustments

General Provisions 101 through 150.

Section 936—Closed Circuit Television (CCTV)

936.1 General Description

This work includes furnishing and installing closed circuit television (CCTV) system, any specified type, which is a CCTV video surveillance camera, including but not limited to color CCTV cameras, lens, housing, pan/tilt drive, camera system assembly, cabling, mounting hardware, interface panel, camera control receiver, and cabinet wiring. This CCTV system includes both fixed and PTZ cameras as called for in the plans and provides operator control from and video imaging to the Department's NaviGAtor Advanced Transportation Management System (ATMS), or other camera operating software indicated on the plans or in the contract documents.

Provide all equipment, materials, and work in accordance with all manufacturers' recommendations, including but not limited to all mounting, wiring and cabling, power supply, surge suppression, and communications equipment and materials. Use only equipment and components that meet the requirements of these minimum specifications and are listed on the Department's Qualified Products List (QPL).

936.1.01 Definitions

CCTV System, Type B – The Type B PTZ Dome CCTV System uses a self-contained camera system assembly with an analog NTSC video output and RS-232 or RS-485 serial data control interface. This camera is used for, shall be compatible with the legacy NaviGAtor System, and should be used for additions/replacement within existing system segments.

CCTV Camera Type C – The Internet Protocol (IP) PTZ Dome Camera System (IP) camera uses a built in encoder to provide the Moving Picture Experts Group's MPEG4 part 10 (H.264) video compression technology in accordance with the International Organization for Standardization (ISO) and International Electrotechnical Commission (IEC) requirements detailed in the ISO/IEC 14496-10:2009 standard. This camera is compatible with the legacy NaviGAtor System, but should be used for new installations in expansion segments.

CCTV Camera Type D – The Internet Protocol (IP) Fixed Camera System uses a built in encoder to provide the Moving Picture Experts Group's MPEG4 part 10 (H.264) video compression technology in accordance with the International Organization for Standardization (ISO) and International Electrotechnical Commission (IEC) requirements detailed in the ISO/IEC 14496-10:2009 standard and is for locations where fixed views are desired for dual use (with video detection) or at locations where power requirements prohibit other type cameras for surveillance.

CCTV Camera Type H – The Internet Protocol (IP) High Definition Camera System uses a built in encoder to provide the Moving Picture Experts Group's MPEG4 part 10 (H.264) video compression technology in accordance with the International Organization for Standardization (ISO) and International Electrotechnical Commission (IEC) requirements detailed in the ISO/IEC 14496-10:2009 standard and is compliant with SMPTE 296M Standard of 1280 x 720 pixel resolution and a 16:9 format. It is compatible with the NaviGAtor System, and provides enhanced features for digital zoom and new format displays (16:9) at viewing stations.

CCTV Camera Type N – The Internet Protocol (IP) PTZ Camera System for Night (low light) viewing may be provided in an outdoor external positioner or dome. Night vision will be provided by thermal imaging.

Video Encoder, Type B – Type B is a standalone, environmentally hardened encoder for a single video signal, suitable for field cabinet use.

Video Encoder, Type C –Type C is a high density unit that supports multiple video signals and is suitable for control center use.

Video Encoder, Type D – This encoder is a standalone, environmentally hardened encoder for a single video signal, suitable for field cabinet use that is compatible with the existing legacy encoder and decoder video systems and otherwise would not meet Type B requirements.

Video Encoder, Type E – This encoder is a high density encoder card unit for multiple video signals, with one encoder per video signal, suitable for control center use with the existing legacy encoder and decoder video systems and otherwise would not meet Type B requirements.

Video Encoder, Chassis Type E –This chassis is a high density mount unit that supports multiple Video Encoder Type C or Video Decoder Type C cards suitable for control center use with the existing legacy encoder and decoder video systems.

936.1.02 Related References

A. Standard Specifications

Section 639 – Strain Poles for Overhead Sign and Signal Assemblies

Section 680 – Highway Lighting

Section 682 – Electrical Wire, Cable and Conduit

Section 922 – Electrical Wire and Cable

Section 923 – Electrical Conduit

Section 925 – Traffic Signal Equipment

Section 939 – Communication and Electronic Equipment

B. Referenced Documents

American National Standards Institute (ANSI)

American Society of Testing and Materials (ASTM)

Electronic Industries Association (EIA)

FCC Rules Part 15, Sub-part J

Insulated Cable Engineers Association (ICEA)

International Electrotechnical Commission (IEC) ISO/IEC 14496-10:2009

International Municipal Signal Association (IMSA)

MIL-HDBK-454A

MIL-STD-810F(3) Method 509 Procedure 1 – exterior salt atmospheres

National Electric Code (NEC)

National Electrical Manufacturers Association (NEMA)

NEMA-4

Underwriter's Laboratory Incorporated (UL)

National Television Standards Committee (NTSC)

936.1.03 Submittals

This subsection and the following chart provide the Contractor with an outline of the submittal requirements for the equipment and components for all pay items in this Section 936. This chart is to be used as a guide and does not relieve the Contractor from submitting additional information to form a complete submittal package.

Section 936 Submittal Requirements									
Material	**Specification Reference**	**Catalog Cuts**	**Mfg. Spec.**	**Materials Cert.**	**Lab Test**	**Install. Proced.**	**Test Plan**	**Maint. Proced.**	**Submittal Due Date (Cal. Days after NTP)**
Training Plan	936.3.08		X			X	X	X	60 Days

Submit test procedures required for this items within sixty (60) calendar days after the Notice to Proceed and prior to any installation, unless noted otherwise in the Contract Documents.

Submit to the Engineer for approval, two (2) printed and one (1) electronic copy of service and maintenance documentation for all equipment, components and all other materials required within these specifications.

Provide submittal data that is neat, legible, and orderly. Neatly organize each package of submittal data and separate by hardware item. Use the "Materials Certification Package Index and Transmittal Form", contained in Section 105.02 of the Special Provisions, for each pay item to document and list all material and components that are included in the submittal package. Any submittal data submitted without the Index/Transmittal form or that is incomplete will be rejected.

Products appearing on the Qualified Products List (QPL) are exempt from normal submittal requirements. These products have been evaluated by the Office of Traffic Operations and have proven their capability of meeting the appropriate Georgia Department of Transportation Specification. Any of these products may be used without submitting catalogue cuts, sampling or pre-testing. The Contractor shall submit a letter to the Engineer, stating which QPL items they will use. The Engineer and/or department designee must ascertain that the construction item is the same material identified on the appropriate QPL and will acknowledge receipt of these items in the project diary or as required by the Construction manual.

A. CCTV System; CCTV System, Retrofit Assembly; CCTV System, Retrofit Assembly (Furnish Only)

1. Camera System Assembly

   Submit complete physical, performance, and operational materials submittal data for the camera system assembly and all associated components.

2. Camera System Assembly Mount

   Submit complete physical, performance, and operational materials submittal data for the camera system assembly mount and all associated components and hardware.

3. Cabinet Interface Assembly

Submit complete physical, performance, and operational materials submittal data for the cabinet interface assembly and all associated components and hardware. Submit complete physical, performance and operational materials, submittal data for all cables, wire and connectors required for a complete and operational CCTV system. Submit cables and connectors as specified here and as recommended by the CCTV system manufacturer.

4. Submittal Review Demonstration Test Set

   Submit demonstration test set(s) for Department evaluation after the Engineer approves the submittal materials for the equipment and materials listed below. The demonstration test sets shall be connected to and operated through the NaviGAtor system by the Engineer. Deliver the test set to the Department at the location specified by the Engineer. Request a delivery and test time a minimum of 30 days in advance. For projects with multiple camera installations, provide demonstration test sets of the materials, types and quantities as shown below:

   a. CCTV System (quantity 2)

   b. CCTV System, Retrofit Assembly (quantity 2)

      A demonstration test set shall include all materials, components, assemblies, control software an documentation of a CCTV system and shall be a complete, fully functional CCTV system.

B. Acceptance Testing

Submit acceptance test procedures and a desired acceptance test schedule.

C. Warranties and Guarantees

Submit materials submittal data providing complete example documentation on all manufacturers' warranties or guarantees on all CCTV system equipment and hardware components furnished, as required in Subsection 936.3.07.

D. Training

Prior to training, submit resume and references of instructor(s). Obtain approval from the Engineer that the instructor is qualified in his/her respective field. Submit the Training Plan within 120 days of the Notice to Proceed. Include in the training plan an outline of the training course. Obtain approval of the Training Plan from the Engineer. The Training Plan shall explain in detail the contents of the course and the time schedule of when the training shall be given. Coordinate actual training with installation schedules as approved by the Engineer.

936.2 Materials

936.2.01 CCTV Systems

Camera types are as specified on the plans, and may vary by location within project limits. Ensure that the individual components and assemblies of the CCTV System conform to the requirements specified in the following sections. Ensure that all equipment, materials, components and assemblies of the CCTV System conform to the CCTV manufacturer's requirements and recommendations.

A. Camera System Assembly

Follow these minimum requirements for a camera system assembly including the camera, dome assembly, lens, pan/tilt drive, and control electronics.

1. For dome enclosure cameras (Types B, C, and H)
   a. Provide a downward-looking circular dome-shaped enclosure assembly. The enclosure shall have a maximum diameter of 14 in (356 mm) at its widest point and a maximum height of 22 in (559 mm) from the top of the housing assembly to the bottom point of the dome. The upper housing shall be constructed of a non-metallic UV-stabilized material of a light color, or constructed of an aluminum material with a heat-cured paint coating of an equivalent color. The lower housing shall be constructed of a UV-stabilized optically-correct acrylic material. The maximum weight of the complete and fully functional camera system assembly, including the

camera, lens, pan/tilt drive, control electronics, environmental control components, housing assembly, and hub adapter shall be 25 lbs (11.4 kg).

b. Use an enclosure assembly that secures to the mounting bracket arm with a 1-1/2 in (37.5 mm) threaded pipe nipple. Hub adapters for the threaded pipe nipple on either the enclosure or the mounting arm, or both, are permitted.

c. All fastening and mounting hardware on or within the enclosure assembly shall be stainless steel.

d. Use a pressurized enclosure assembly that uses extra dry nitrogen. Provide a pressure relief valve and a Schrader valve for filling and evacuating the enclosure. The enclosure should have an operating pressure range of 3-7 psi (21-48 kPa).

e. When an enclosure assembly requires a heater and a circulating blower fan for environmental (temperature and defogging) control, maximum electrical load for the heater shall be no more than 85 VA.

f. Ensure that the CCTV camera system performs all required functions during and after being subjected to an ambient operating temperature range of -30º to 165º F (-34° to 74° C) as defined in the environmental requirements section of the NEMA TS 2 standard. Verify that the CCTV camera manufacturer certifies its device has successfully completed environmental testing as defined in the environmental requirements section of the NEMA TS 2 standard.

g. Ensure that the housing protects the camera and other internal components from rain, dust, corrosive elements, and typical conditions found at a roadside environment. Ensure that the CCTV camera, mounting hardware, and any other camera-related material that is exposed to the environment can withstand 90 mph (145 kph) wind speeds.

h. Electrical power for the complete camera system assembly shall be per the manufacturer's recommendations and between 12V to 120V DC or single-phase AC utilizing a two-wire (not counting ground) supply from the cabinet interface assembly in the equipment cabinet. Do not use a dual-voltage power supply. Maximum electrical load with all subsystems operational, including the heater, shall be no more than 130 VA.

i. For analog cameras (Type B), ensure that the camera produces an analog NTSC-compliant composite video output with a signal-to-noise ratio of 45dB or greater.

j. Use a camera unit with an integrated camera sensor and zoom lens assembly. The camera shall use a CCD image sensor, with a minimum of 768 horizontal by 492 vertical active picture elements. The camera shall have a minimum resolution of 460 horizontal TV lines by 350 vertical TV lines.

k. The camera shall include on/off selectable automatic gain control and manual/automatic selectable white balance. The camera shall include an electronic shutter mode with user-selectable speeds of a minimum range from 1/60 second to 1/10,000 second. The camera unit shall provide an on/off selectable day/night function where the image sensing and output automatically switch between color and black-and-white imaging; fixed color or black-and-white imaging shall be user-controllable. The camera sensitivity shall be no less than 3.0 lux in color mode (1/60 second) and 0.5 lux in black-and-white mode (1/60 second, IR cut removed).

l. Provide a camera unit with an integrated zoom lens of a minimum of 22X optical zoom and a minimum of 4X (HD Camera Type D shall have a minimum of 12X) digital zoom. The camera shall not employ any digital zoom functionality unless the lens is at the full limit of optical zoom and the zoom command continues to be applied, in which case the camera unit shall automatically switch from optical to digital zoom. The camera unit shall include on/off selectable automatic focus and manual/automatic selectable iris control.

m. Use a pan/tilt drive for the camera unit that is fully-contained within the enclosure assembly. The drive shall be capable of 360 degree panning and at least 0 degree horizontal to 90 degree vertical looking downward tilting.

The camera unit and pan/tilt drive shall provide automatic 180-degree image output flip at the bottom of the tilt travel. The camera unit and pan/tilt drive shall provide a minimum of eight privacy blackout zones, each zone being individually programmable to be on/off by the user. The panning speed, when a pan-left or pan-right command is applied by the user, shall be between 10 and 18 degrees per second. The tilting speed, when a tilt-up or tilt-down command is applied by the user, shall be between 4 and 10 degrees per second.

n. Provide a system control interface to the camera system assembly that physically and logically supplies the user commands to and monitoring from the camera system assembly, including but not limited to pan, tilt, zoom, focus, position reporting, and configuration. The system control interface shall physically connect the camera system assembly to the cabinet interface. Provide a system control interface that is in compliance with all of the physical and operational requirements specified for a CCTV System. Provide the capability to set the communications through the system control interface or through the user control interface in the cabinet; do not require the opening/disassembly of the camera system enclosure to set the communications address. Store all user configurable settings in non-volatile memory that is retained indefinitely upon loss of power.

2. Camera Type D – Fixed Camera. Fixed cameras shall be designed for outdoor applications meeting NEMA 4X or IP-66 rating requirements and include all necessary harness and cables to extend the video, power and data from the CCTV Camera location to the field cabinet. The enclosure shall be suitable for the location and meet all requirements as denoted above for other camera types. The lens shall have a minimum F-stop of 1.4 with a variable manual zoom of 5 – 50 mm. The iris shall support automatic or set to yield optical results under various outdoor lighting conditions. The camera shall provide all other functionality as required of other types to produce a fixed view of the roadway.
3. IP Cameras (Types C, D, H) shall provide the same functionality as the analog camera unit, and shall include built in encoders.(i.e., Ethernet ready).. In addition, IP cameras shall meet the following minimum requirements:
   a. Power over Ethernet (IEEE802.3af) or 24 VAC power input.
   b. Shall utilize H.264 (Video Coding Experts Group (VCEG/Moving Picture Experts Group (MPEG) Video Compression Technology types as compatible with the NaviGAtor System.
   c. Shall be capable of two (2) simultaneous video streams.
4. High Definition Cameras (Type H) shall provide the same functionality as other IP (built in encoders) camera types, and in addition, shall meet the following minimum requirements:
   a. HD 1080p resolution at 30 images per second (ips)
   b. Minimum 12x digital zoom.
   c. 16:9 aspect ratio
   d. Digital image stabilization
5. CCTV Camera Type N – Internet Protocol (IP) PTZ Camera System for Night (low light) viewing shall provide video surveillance imaging for reliable video images clearly in near total darkness. Images shall be provided in 640 X 480 resolution with dual output stream digital video in H.264, MPEG-4, or M-JPEG formats.

936.2.02 Camera System Assembly Mount

Provide a camera system assembly mount that includes a mounting bracket arm, camera enclosure mount and disconnect, mounting straps, and incidental fastening hardware. All fastening and mounting hardware shall be stainless steel.

The mounting bracket arm shall be suitable for pole-mounted applications using mounting straps or bolts. The bracket shall be fabricated to exactly mate with the camera enclosure mount/disconnect/pipe nipple and any needed pole-mount adapter with no drilling or welding required. The bracket shall be fabricated from aluminum alloy with an exterior polyurethane coating, stainless steel, or mild steel with a heat-cured paint coating. All bracket coatings shall be light in color and corrosion resistant in accordance with MIL-STD-810F (3) Method 509 Procedure 1 for exterior salt atmospheres.

Unless otherwise indicated on the plans, use a mounting bracket arm that locates the vertical centerline of the camera enclosure from 14 in (356 mm) to 24 in (610 mm) from the exterior surface of the support pole. The mounting bracket arm shall provide for cable entrance through the base of the bracket directly from the support pole and from the exterior through a rain tight opening on the underside of the bracket and adjacent to the support pole. The bracket arm shall provide sufficient opening to fully enclose the cables. Provide non-metallic cable protection grommets for both cable entrances. Unless otherwise shown in the Plans, mount the bracket arm to the support pole using a minimum of two ½ in (12.5 mm) or greater stainless steel mounting straps.

936.2.03 Camera Lowering System Assembly Mount

Where specified on the plans, provide a camera lowering system that includes a mounting bracket arm, self aligning docking system, video and power surge protection. The unit will be self contained, suitable for pole-mounted applications using straps or bolts. All fastening and mounting hardware shall be stainless steel. The lowering cable(s) shall be stainless steel. All bracket coatings shall be light in color and corrosion resistant in accordance with MIL-STD-810F (3) Method 509 Procedure 1 for exterior salt atmospheres. The lowering device shall have a support capacity of 55 lbs. (25 Kg.), and shall provide for camera systems at varying heights above ground level to match the height of the mounting structure. Electrical power for the complete camera lowering system assembly shall be per the manufacturer's recommendations and 120 VAC.

936.2.04 Cabinet Interface Assembly

Use a cabinet interface assembly that provides electrical service for the camera system assembly and provides the user control interface connection to the NaviGAtor system and/or user personnel. Install the cabinet interface assembly in the equipment cabinet. All fastening and mounting hardware shall be stainless steel. The cabinet interface panel assembly includes the following:

- CCTV Interface Enclosure
- Camera System Assembly Power Supply with surge suppression
- Terminal blocks and video cable surge suppression for camera system assembly cabling
- User control interface to the NaviGAtor system and/or user personnel with surge suppression

The NaviGAtor Standard CCTV Control Protocol (hereinafter called the "CCTV Standard Protocol") is specified below and shall connect to the user control interface unit through an RS-232 serial data interface directly from the NaviGAtor system. Provide the control software with an unrestricted, non-cancelable user license for the Department's use with any NaviGAtor equipment at any location. Furnish three (3) copies each of the software, license, appropriate RS-232 cable, and user documentation per project.

A. CCTV Standard Protocol

1. General

   For all camera types, use the NaviGAtor Standard CCTV Control Protocol (hereinafter called the "CCTV standard protocol" or "standard protocol") for CCTV system control communications between the camera unit and the GDOT NaviGAtor central system to achieve a fully functional communications interface to utilize all of the capabilities and functions of the camera. Implement the standard protocol for all CCTV equipment installed on this project. The CCTV standard protocol governs all control communications between the NaviGAtor central system (hereinafter called the "host") and the CCTV system.

2. Interface

   For Type B cameras, the CCTV System (hereinafter called the "remote") shall communicate using the CCTV standard protocol over an RS-232 serial interface. Data is transmitted using 1 start bit, 8 data bits, and 1 stop bit (no parity) at a baud rate of 9600.

   Each remote shall be identified by a unique integer address between 1 and 233. This address is set during installation and shall not be altered using the standard protocol. The address is included in messages to identify the intended recipient of commands from the host and responses from the remote.

936.2.05 Cabling and Connectors

Provide cabling and connectors between the camera system assembly and the cabinet interface assembly as shown in the CCTV system detail drawings and in the Plans. Label all cables. All cables shall meet industry and manufacturer recommendations.

When required for the camera application, coaxial video signal cables will be provided with labels attached at both ends of each cable. Coaxial cables will use BNC connectors with gold-plated center pins on the video signal cables; use only connectors recommended by the cable manufacturer.

Provide control cable with labels attached at both ends of the cable. Terminate control cable in the equipment cabinet as shown in the CCTV system detail drawings in the plans and as recommended by the CCTV system manufacturer. Ground or bond any pair shielding and any unused conductors in accordance with the CCTV system manufacturer's recommendations.

For IP Cameras, provide communications cabling (Outside Plant Category 5) as recommended by the CCTV system manufacturer. Label all cables. Separate power cables must be clearly labeled as such and meet manufacturer recommendations. When Power over Ethernet cameras are provided, cabling must be sized and rated in accordance with manufacturer recommendations and clearly labeled as such.

936.2.06 Video Encoder (All Types)

Provide a Video Encoder in accordance with the minimum requirements below for the encoding of analog video inputs and transmission as digital streams over a network.

A. Video Encoder, Type A

Not Used

B. Video Encoder, Type B

Video Encoder, Type B is a standalone, environmentally hardened encoder for a single video signal, suitable for field cabinet use.

1. General
   a. All encoders provided by the Contractor shall be new and shall be from the same manufacturer and be fully compatible and interoperable with each type provided.
   b. All encoder types provided by the Contractor shall be fully compatible and interoperable with the GDOT existing network equipment.
   c. Mean Time Between Failures (MTBF): Encoders shall have a minimum MTBF of 20,000 hours.
   d. Latency: The end-to-end system latency between the Encoder and Decoder appliances shall be no more than 300 msec, not including network delays. The encoders shall support various frame adjustments to minimize latency.
   e. Remote Control: Encoders shall be remotely adjustable via a video management system or command set so that a technician can adjust image quality controls for contrast, brightness, hue and color levels.
   f. Video equipment shall support the NTSC signal format.
   g. Furnish rack-mountable or shelf-mountable units.
   h. Rack-mountable units shall include integrated brackets for mounting in standard EIA 19-inch rack rack-mountings.
2. Physical and Environmental Requirements.
   a. The Video Encoder shall have the following ports as a minimum:
      - Network: 10/100 Mbps RJ-45 or as directed by Engineer.
      - Video Connector: BNC

- Serial Data Interface: One (1) minimum RJ-45 port/connector.
- Serial port may utilize D-sub connectors or thumb screw terminals as approved by the Engineer.

b. In locations where there are more than one video source, and Encoders with multiple video ports are approved by Engineer, each video input port shall meet all the video and data requirements of section 939-X.X.3 independently.

c. The video input performance measures shall comply with NTSC and EIA requirements, including the EIA-170 standard, with a nominal composite video of 1 volt peak-to-peak (Vp-p). The equipment shall have an electrical impedance of 75 ohms.

d. Operating temperature of -30 degrees F (-34 C) to 165 degrees F (74 C) with relative humidity between 10% to 90% non-condensing.

e. Ventilation fans are not permitted.

f. Encoders shall be installed in a field cabinet with protection from moisture and airborne contaminants, blowing rain, wind, blowing sand, blowing dust, humidity, roadside pollutants, vandalism, and theft.

g. Encoders shall be resistant to vibration and shock, and conform to Sections 2.1.9 and 2.1.10, respectively, of the NEMA TS 2 standard.

h. Encoders for field site locations shall be PCB conformal coated to provide a level of protection from humidity, contaminants, dust, pollution, etc.

i. Encoders shall provide LED status indicators for local status display of video, data, network interfaces and power.

j. Cable connections (data/video/power) shall require no tools for installation or removal and be designed with positive locking devices such that they will not vibrate loose.

k. Provide external markings for all connectors and indicators. Replaceable components shall be permanently marked and traceable to the supplied documentation, including schematics and parts list.

l. The external markings shall include the product function name, model number, serial number, and manufacturer's name.

m. All parts required for a completed video system shall be made of corrosion-resistant materials, such as stainless steel, anodized aluminum, brass, or gold-plated metal.

n. All individual Encoders shall be shelf, rack (19")/module, or DIN rail mountable. Other mounting options may be submitted for review and approval by the Engineer.

o. Nominal power input voltage of 120 VAC, 60 Hz. ±3 Hz.

p. Maximum power consumption of 20 watts.

q. If the device requires operating voltages of less than 120 VAC, the appropriate voltage converter shall be supplied. All voltage conversion devices shall also be temperature hardened as specified herein for location (field or central).

r. The equipment or it's voltage converter shall operate within a voltage range of 90 VAC to 135 VAC.

s. Encoders shall provide for automatic recovery from an over or under voltage condition when prime power has returned to the tolerance values specified herein. All configuration parameters shall be stored in non-volatile memory and no reprogramming or manual adjustments shall be required upon power recovery.

3. Video Data Requirements

a. The Encoder shall be capable of streaming a minimum of the following Video Compression Technology types:

- H.264 (Video Coding Experts Group (VCEG)/Moving Picture Experts Group)
- MPEG -4 (Moving Picture Experts Group)
- MJPEG Motion JPEG (Moving Picture Experts Group)

b. The Encoder shall be capable of streaming multiple bandwidth and compression types simultaneously per video input channel.

c. The Encoder shall support streaming multicast and unicast streams simultaneously.

d. The Encoder shall have the ability to automatically initiate and stream a multicast stream upon starting without any remote request to join the multicast group.

e. The Encoder shall support multiple simultaneous Real Time Streaming Protocol (RTSP) requests.

f. The Encoder shall be able to supply multiple unique and independent video streams with frame rate, bit rate, and image size settings adjustable through an RTSP request.

g. The encoder shall support a minimum of 2 simultaneous unique and independent H.264 video streams with frame rate, bit rate, and image size settings adjustable per video input channel.

h. The Encoder shall support capturing of snapshot images of the video stream.

i. Encoders shall be a hardware-based network device able to accept a minimum of one analog National Television System Committee (NTSC) video input and encode for transport across IP networks.

j. Encoders shall be specifically designed for network operation, and adhere to ISO standards.

k. Support the following minimum encoded resolutions:

- NTSC - Full D1
- CIF/SIF
- QCIF/QSIF

l. Dynamic bandwidth control: Provide up to 3 Mbps or greater rates (The data rate shall be defined as the maximum committed bandwidth to be utilized, which includes data bursting.).

m. Bandwidth increments shall be user configurable via the network. The minimum bandwidth setting shall be 56Kbs or less.

n. Encoder streams shall be capable of being set to variable or constant bit rates.

o. The default bandwidth for the Encoders as furnished shall be set to 2Mbps when communicating over fiber and 56kbs when communicating otherwise.

p. Provide on-board buffered video memory for protection against potential network disruptions.

q. Encoders shall be capable of providing JPEG snapshots and transfer image via FTP.

r. There shall be available standard software decoders that are compatible with the provided hardware Encoders.

4. Network Requirements

a. Encoders shall meet the following minimum network requirements:

b. Network connection shall be Ethernet Compliant IEEE 802.3, 802.3u, and 802.3x; 10/100 Mbps or higher, auto sensing full/half-duplex operations.

c. Encoders shall provide encapsulation of the video streams in a UDP packet for network transmission.

d. Encoders shall connect to a network device (i.e., Ethernet switch/router, IP wireless device, etc.) via a RJ-45 connector through Category 5eor higher quality stranded patch cords.

e. All network RJ-45 ports shall be standard EIA/TIA-568-A pin-outs and shall be rated at 10/100Mbps or greater.

f. All Encoders provided by the Contractor shall be fully interoperable without customization or the addition of appliances within either the remote or primary communications network. All devices shall be fully interoperable with the backbone communications network.

g. Static IP Addressing (class A, B, and C).

h. RTP, UDP, Unicast and IP Multicast (Internet Group Multicast Protocol / IGMP V2) features for digital video transmission.

i. Encoders shall support Real Time Streaming Protocol (RTSP) over RTP.

j. Encoders shall support multiple stream requests.

5. Serial Data Interface Requirements

The Encoder shall meet the following minimum serial data interface requirements:

a. The Encoder shall provide bi-directional serial communications over Ethernet 10/100 Base-TX via the following methods:

- Encoder serial port to Decoder serial port data stream.
- IP socket to Encoder serial port by TCP protocol.

b. Each serial port shall provide full-duplex serial interface and data rates up to 115.2 Kbps (minimum).

c. Serial port shall be software configurable, locally or over the network, to EIA-232/422/485 mode of operation as defined by the EIA for data format, data rate, and data structure (e.g., baud rate, the number of bits, parity, stop bits, flow control, etc.) via the management software provided.

d. No serial adaptors or interface converters shall be permitted.

e. Encoders shall be capable to use the serial interface port to support PTZ camera control functions.

f. Encoder serial port shall provide IP addressing and socket number selection and provide the capability to establish an IP connection directly from an operator workstation or server to any Encoder IP address and socket number to transport serial data, independent of whether or not the video stream for that VE is being viewed.

6. On Screen Display Requirements

Where OSD functionality is not supplied by cameras the minimum on-screen text insertion and display requirements include:

a. Encoders shall support a static text insertion capability and shall be capable of inserting a minimum of one (1) user configurable text messages of up to 20 characters in length.

b. Encoders shall be able to generate a date and time stamp in the video stream and shall be synchronized to a time-server on the network.

c. Encoders shall be able to display camera title in the video stream.

d. Encoders shall have the option to display or not display the on-screen text.

7. Management Requirements

a. Encoders shall be manageable through SNMP (v2), HTTP, FTP/TFTP, and/or Telnet/CLI.

b. The management system shall be provided to remotely configure and diagnose the Encoder.

c. Have capability to reset/reboot and firmware upload via the methods listed above.

d. Have the capability to remotely change any of the device configuration settings including bit rates, image resolution and compression settings and serial interface type.

e. Provide pre-defined optimized video compression and streaming settings for various bit rates.

f. Provide update capability for the firmware in the Encoder from the central site. Ability to access the serial number, firmware number, IP address and equipment configuration.

g. Have the capability to upload firmware to multiple units automatically.

h. Provide ability for remote firmware upgrades.

i. Provide a command-line interface on the console port for local management.

j. Provide administrative access control via a configurable password.

k. Provide support for managing the administrative security parameters via both the Local Management and Remote Management interfaces required herein.

j. Provide support for managing the following video streaming parameters via the Remote Management functionality required herein.

- Target address and port
- TTL parameter
- Resolution
- Frame rate
- I/P ratio
- Encoding bit rate
- On-screen text or title overlay features

C. Video Encoder, Type C – Card

Video Encoder, Type C- Card is a high density encoder unit (card) for multiple video signals, with one encoder per video signal, suitable for control center use in a slot based chassis.

1. General

a. Each encoder of a Video Encoder Type C- Card shall meet all the Video Encoder, Type B requirements except the physical requirements as noted in section 936.2.06.B.

b. All Contractor provided Video Encoder Type C- Cards shall be compatible with, and of the same make as Video Encoder, Type C – Chassis provided by the Contractor.

c. All Contractor provided Video Encoder Type C- Cards shall be compatible with, and of the same make as standalone Video Encoder, Type B provided by the Contractor.

2. Physical

a. Each Video Encoder Type C- Card shall include a minimum of 4 encoders per card with a corresponding number of BNC ports per encoder.

b. Each Video Encoder Type C- Card shall include one RJ-45 Network port: 10/100 Mbps.

c. Video Encoder Type C- Card shall be fully contained and obtain power from the Video Encoder, Type C Chassis.

D. Video Encoder, Type C – Chassis

Video Encoder, Type C - Chassis is a high density rack mount unit that supports multiple Video Encoder Type C or Video Decoder Type C cards suitable for control center use.

1. General

   All Contractor provided Video Encoder Type C- Chassis shall be compatible with, and of the same make as Video Encoder, Type C – Cards provided by the Contractor

2. Physical

   Chassis shall support a minimum of 12 Video Encoder, Type C cards, or 12 Video Decoder, Type C cards, or a combination thereof up to the minimum total cards.

   a. Chassis shall be 7U or less and be 19" rack mountable.

   b. Each Chassis shall be capable of operating on 1 internal power supply.

   c. Each Chassis shall be capable of supporting a minimum of 2 internal power supply.

E. Video Encoder, Type D

Video Encoder, Type D is a standalone, environmentally hardened encoder for a single video signal, suitable for field cabinet use that is compatible with the existing legacy encoder and decoder video systems and otherwise would not meet Type B requirements.

1. General

   Encoders of this Type shall be of the same make and model of encoder(s) that it shall replace, share communication in a drop and add link with, or with the decoder that shall decode it's video, unless otherwise approved by the Engineer.

F. Video Encoder, Type E – Cards

Video Encoder, Type E-Cards is a high density encoder unit for multiple video signals, with one encoder per video signal, suitable for control center use with the existing legacy encoder and decoder video systems and otherwise would not meet Type B requirements.

1. General

   Encoder Cards of this Type shall be of the same make and model of the Encoder Card(s) that it shall replace, or with the Encoder Card(s) that resides in the same chassis that it shall be added to unless otherwise approved by the Engineer.

G. Video Encoder, Type E – Chassis

Video Encoder, Type E - Chassis is a high density rack mount unit that supports multiple Video Encoder Type C or Video Decoder Type C cards suitable for control center use with the existing legacy encoder and decoder video systems and otherwise would not meet Type B requirements.

936.2.07 Video Decoder (All Types)

A. Video Decoder, Type A

Not Used

B. Video Decoder, Type B

Video Decoder, Type B is a standalone decoder for the decoding of IP streams of the formats compatible of the Video Encoder Type B streams into a standard NTSC analog video stream output.

1. General

a. All Video Decoder Type B shall meet all the requirements of a Video Encoder Type B unless otherwise stated.

b. Be new and shall be from the same manufacturer and be fully compatible and interoperable with each type provided.

2. Physical and Environmental

Video Output Connector : BNC

a. The video output performance measures shall comply with NTSC and EIA requirements, including the EIA-170 standard, with a nominal composite video of 1 volt peak-to-peak (Vp-p). The equipment shall have an electrical impedance of 75 ohms.

3. Video Data Requirements

a. The Decoder shall be capable of decoding a minimum of the following Video Compression Technology types:

- H.264 (Video Coding Experts Group (VCEG)/Moving Picture Experts Group)
- MPEG -4 (Moving Picture Experts Group)
- MJPEG Motion JPEG (Moving Picture Experts Group)

b. The Decoder shall support joining multicast groups and decode the streams of the Type and video Compression technology listed above.

c. The Decoder shall support decoding unicast streams from a of the Type and video Compression technology listed above.

d. The Decoder shall support decoding of streams from RTSP requests of the Type and video Compression technology listed above

e. The Decoder shall be able to decode unique and independent video streams with frame rate, bit rate, and image size settings adjustable through an RTSP request.

f. Decoders shall be a hardware-based network device able to provide a minimum of one analog National Television System Committee (NTSC) video output and decode IP video transported across IP networks.

g. Decoders shall be specifically designed for network operation, and adhere to ISO standards.

h. Support the following minimum encoded resolutions:

- NTSC - Full D1
- CIF/SIF
- QCIF/QSIF
- Decoder streams shall be capable of decoding streams set to variable or constant bit rates

4. Network Requirements. Decoders shall meet the following minimum network requirements:

Network connection shall be Ethernet Compliant IEEE 802.3, 802.3u, and 802.3x; 10/100 Mbps or higher, auto sensing full/half-duplex operations.

5. Serial Data Interface Requirements

6. On Screen Display Requirements

a. Decoders shall support a static text insertion capability and shall be capable of inserting a minimum of one (1) user configurable text messages of up to 20 characters in length.

b. Decoders shall be able to generate a date and time stamp in the video stream and shall be synchronized to a time-server on the network.

c. Decoders shall be able to display camera title in the video stream.

d. Decoders shall have the option to display or not display the on-screen text.

7. Management Requirements
   a. Decoders shall be manageable through SNMP (v2), HTTP, FTP/TFTP, and/or Telnet/CLI.
   b. The management system shall be provided to remotely configure and diagnose the Decoder.

C. Video Decoder, Type C – Card

Video Decoder, Type C- Card is a high density Decoder unit (card) for multiple video signals, with one Decoder per video signal, suitable for control center use in a slot based chassis.

1. General
   a. Each Decoder of a Video Decoder Type C- Card shall meet all the Video Decoder, Type B requirements except the physical requirements as noted in section 936.2.06.B.
   b. All Contractor provided Video Decoder Type C- Cards shall be compatible with, and of the same make as Video Decoder, Type C – Chassis provided by the Contractor
   c. All Contractor provided Video Decoder Type C- Cards shall be compatible with, and of the same make as standalone Video Decoder, Type B provided by the Contractor
2. Physical
   a. Each Video Decoder Type C- Card shall include a minimum of 4 Decoders per card with a corresponding number of BNC ports per Decoder.
   b. Each Video Decoder Type C- Card shall include one RJ-45 Network port: 10/100 Mbps.
   c. Video Decoder Type C- Card shall be fully contained and obtain power from the Video Decoder, Type C Chassis.

D. Video Decoder, Type C – Chassis

Video Decoder, Type C - Chassis is a high density rack mount unit that supports multiple Video Decoder Type C or Video Decoder Type C cards suitable for control center use.

1. General
   a. All Contractor provided Video Decoder Type C- Chassis shall be compatible with, and of the same make as Video Decoder, Type C – Cards provided by the Contractor
2. Physical
   a. Chassis shall support a minimum of 12 Video Decoder, Type C cards, or 12 Video Decoder, Type C cards, or a combination thereof up to 12 total cards.
   b. Chassis shall be 7U or less and be 19” rack mountable.
   c. Each Chassis shall be capable of operating on 1 internal power supply.
   d. Each Chassis shall be capable of supporting a minimum of 2 internal power supply.

E. Video Decoder, Type D

Video Decoder, Type D is a standalone, environmentally hardened Decoder for a single video signal, suitable for field cabinet use that is compatible with the existing legacy Decoder and decoder video systems and otherwise would not meet Type B requirements.

1. General

Decoders of this Type shall be of the same make and model of Decoder(s) that it shall replace, share communication in a drop and add link with, or with the decoder that shall decode it's video, unless otherwise approved by the Engineer.

F. Video Decoder, Type E – Cards

Video Decoder, Type E-Cards is a high density Decoder unit for multiple video signals, with one Decoder per video signal, suitable for control center use with the existing legacy Decoder and decoder video systems and otherwise would not meet Type B requirements.

1. General

   Decoder Cards of this Type shall be of the same make and model of the Decoder Card(s) that it shall replace, or with the Decoder Card(s) that resides in the same chassis that it shall be added to unless otherwise approved by the Engineer.

G. Video Decoder, Type E – Chassis

Video Decoder, Type E - Chassis is a high density rack mount unit that supports multiple Video Decoder Type C or Video Decoder Type C cards suitable for control center use with the existing legacy encoder and decoder video systems and otherwise would not meet Type B requirements.

1. General

   Encoder Chassis of this Type shall be of the same make and model of the Encoder Chassis that it shall replace unless otherwise approved by the Engineer.

936.2.08 Delivery, Storage, and Handling

For Furnish Only items, provide all materials in protective packaging suitable for shipping and storage. Label all boxes with contents, including manufacturer name, model, serial numbers, and project number. Package each product/system in individual boxes as units of one complete unit. Multiple boxes for one assembly is acceptable, but multiple assemblies in the same box is not. Deliver assemblies to the Department at the location specified by the Engineer. Deliver at one time the full quantity of complete assemblies as shown in the Plans; multiple deliveries are not acceptable.

936.3 Construction Requirements

Ensure that all construction for the equipment, materials, components and assemblies of the CCTV System specified conform to the CCTV manufacturer's requirements and recommendations.

936.3.01 Personnel

Not applicable

936.3.02 Equipment

Not applicable

936.3.03 Preparation

Not applicable

936.3.04 Fabrication

Not applicable

936.3.05 Construction

A. General Requirements

Request that the Department establish the utility service(s) required for a CCTV installation as described in Section 682.

B. CCTV System, All Types

1. Installation Requirements

   Mount the camera system assembly and the mounting bracket arm at the cardinal direction and height as shown in the Plans.

   Install cables between the camera system assembly and the equipment cabinet inside new hollow metal or concrete support poles unless otherwise specified. Where devices are installed on existing wood poles, install cabling on the wood poles in rigid metal conduit risers of minimum 2 in (50.8 mm) diameter. Use weather heads on all nipple and conduit openings. Neatly install and route cabling to minimize movement in the wind and chafing against the pole, device or bracket. Form a drip loop at the weather head and route cabling to prevent water entry into the weatherhead or mounting bracket arm. Install the mounting bracket arm no more than 8 in (204 mm) above the weatherhead, and install a drip loop that is no more than 6 in (152 mm) below the weatherhead at the loop's lowest point.

   Install the cabinet interface assembly components in the equipment cabinet as shown in the CCTV system detail drawings. Neatly arrange and dress all wiring, firmly lace or bundle it, and mechanically secure the wiring without the use of adhesive fasteners. Route and secure all wiring and cabling to avoid sharp edges and to avoid conflicts with other equipment or cabling. Route all CCTV cables separate from any 120VAC power wiring or surge suppressor ground wiring. Neatly coil and dress between 3 ft (1 m) and 5 ft (1.5 m) of cables in the bottom of the cabinet. Dress and route grounding wires separately from all other cabinet wiring and with the minimum length possible between the suppressor and the ground bussbar. Do not splice any cable, shield or conductor used for video, control, communications signaling, power supply, or grounding.

   Fasten all components of the cabinet interface assembly to be mounted on the equipment cabinet side panel or on the CCTV Interface Enclosure with stainless steel hex-head or Phillips-head machine screws. Install the screws into tapped and threaded holes in the panels. Fasten stud-mounted components to a mounting bracket providing complete access to the studs and mounting nuts. All fastener heads and nuts (when used) shall be fully accessible within the equipment cabinet, and any component shall be removable without requiring removal of other components, panels, or mounting rails. Do not use self-tapping or self-threading fasteners.

2. CCTV System Configuration

   Program and configure the CCTV system in accordance with the procedure below. Provide all required documentation in writing with all data recorded in the format of the NaviGAtor Standard CCTV Control Protocol. Perform the CCTV system configuration in accordance with the acceptance procedures in subsection 936.3.06. Configure each CCTV system with the communications address specified by the Department, prior to any acceptance testing at a given CCTV system site. Configure the communications address as "001" unless otherwise shown in the Plans or directed by the Engineer.

   GDOT's "ATMS Surveillance Camera Control Integration and Calibration Procedure" is as follows:

   a. Record the position status setting for the full pan left and pan right stops. The pan left and pan right stops are defined as the camera positions when the pole initially comes into view from either direction at maximum zoom.

   b. Record the position status setting and angle (degrees from horizon) for maximum tilt up and maximum tilt straight down (90 degrees down from horizontal).

   c. Record the position status settings for each end of maximum focus range.

   d. Record the position status settings for maximum zoom out and zoom in.

   e. Provide to the Department the following information from each field installation site:

      - Location (as shown in Plans)
      - Height of camera (ft) above travel lanes
      - Azimuth (compass heading in degrees at camera's right stop as defined above)
      - Azimuth (compass heading in degrees at camera's left stop as defined above)

- Device ID as shown on the Plans (example: CAM001)
- CCTV system communications address (example: 001)
- IP address, Subnet mask, Gateway port/socket of serial port on Encoder
- Multicast address
- Video switch input port (when connected)
- Comments

3. As-Built Drawings

Furnish as-built CCTV system wiring diagrams, identified by location. Include all wiring, cabling, conductor function, connector type and connector pinouts.

936.3.06 Quality Acceptance

A. General

Acceptance testing of CCTV System, all Types consists of three phases: 1) field installation testing; 2) CCTV system site testing; and 3) burn-in period. After the Engineer's granting of burn-in period completion, obtain CCTV system acceptance. Perform acceptance testing for all equipment, hardware and work provided under this Contract, including each CCTV video surveillance field installation assembly and all associated communications hardware at a control center or communications hub. Perform all testing in the presence of the Engineer. Notify the Engineer of a desired acceptance test schedule no less than fourteen calendar days prior to beginning the testing except for testing using the NaviGAtor software and existing NaviGAtor control center and communications equipment. For acceptance testing using the NaviGAtor software and existing NaviGAtor control center and communications equipment, coordinate this testing with the Engineer no less than 30 days prior to the start of this testing.

Except as provided herein regarding the Department's NaviGAtor software, develop, provide all equipment for, and perform all acceptance testing for all CCTV system equipment, hardware and work. Develop detailed and thorough test procedures with full test plan descriptions, test and measurement equipment listings, and test results data sheets. Submit these test plans to the Engineer for approval. The Engineer will notify the Contractor of the approval or disapproval of the test procedures; only test procedures approved by the Engineer can be used. Provide all necessary testing and measurement equipment.

Make the acceptance testing plan a detailed and thorough procedure for both the field installation test and the CCTV system site test. Demonstrate that the CCTV system equipment, hardware and work meet all requirements of the Contract. These requirements include but are not limited to all design, construction, materials, equipment, assembly, documentation of manufacturer's certification of assembly and configuration, environmental, performance, communications, video and data communications signal strength and clarity, compatibility with the NaviGAtor software, and documentary requirements of the Contract.

Prior to the beginning of any acceptance testing at a given CCTV system site, complete all configuration and documentation associated with GDOT's "ATMS Surveillance Camera Control Integration and Calibration Procedure," described in Subsection 936.3.05.B. Be prepared to demonstrate such work.

B. Field Installation Test

Perform the Field Installation Test as an onsite test of the complete field installation assembly less the communications components; no acceptance testing at a given site can begin until all work associated with that site is complete, not including the communications components. For the field equipment installation test, use a PC system, CCTV Embedded Protocol control software, and a color video monitor to demonstrate full operation of the CCTV site. Demonstrate operation to include pan, tilt, focus, zoom, iris, position feedback, and communications address configuration. Measure the video signal strength at the video connector of the communications equipment.

C. CCTV System Site Test

For the CCTV System Site Test, demonstrate proper CCTV system performance at the TMC or other control center determined by the Department. Perform the CCTV System Site Test only after successful completion of the field

installation acceptance test. Demonstrate the complete video image, camera/lens control, and communications operation from each CCTV site to the TMC. Use the NaviGAtor software and existing NaviGAtor control center and communications system to demonstrate the compatibility of the CCTV equipment and installation in its permanent NaviGAtor configuration. Verify data communications (pan, tilt, focus, zoom, iris, position feedback) from the TMC as defined in the Department-approved test procedures.

D. Burn-in Period

1. General Requirements

Provide a 30-day burn-in period for all work and equipment included in the Contract. The burn-in period shall consist of the field operation of the CCTV system in a manner that is in full accordance with the CCTV system requirements of the Plans and Specifications. An acceptance test procedure is not required for the system burn-in.

Conduct only one (1) burn-in period on the entire Contract. Commence with the burn-in period only after meeting all of the following requirements:

a. All work required in all Contract documents for CCTV (may be combined with construction contract) (except this burn-in period) has been completed and inspected by the Engineer.

b. Successfully complete all Acceptance Testing.

Commence with the burn-in period upon written authorization by the Department to commence. Terminate the burn-in period 30 consecutive days thereafter unless an equipment malfunction occurs. Stop the burn-in period for the length of time any equipment is defective. After repairing the equipment so that it functions properly, resume the burn-in period at the point it was stopped.

Successful completion and acceptance of the burn-in period will be granted on the 30th day unless any equipment has malfunctioned during the 15th through 30th day of the burn-in period. If any equipment has failed during the 15th through 30th day, final acceptance will be withheld until all the equipment is functioning properly for 15 days after repair.

When a specific piece of equipment has malfunctioned more than three times during the 30 day burn-in period, replace that equipment with a new unit and repeat the 30 day burn-in period.

2. Contractor Responsibilities

During the burn-in period, maintain all work under this Contract in accordance with the Specifications. Restore any work or equipment to proper operating condition within 12 hours after notification.

3. Department Responsibilities

Department responsibilities during the burn-in period will be as follows:

a. Expeditious notification of Contractor upon failure or malfunction of equipment

b. In the event that the Contractor does not provide the services enumerated above under his Contract responsibilities, the Department or its authorized agents may in the interest of public safety take emergency action to provide for adequate traffic control. Pay any costs incurred as a result of these emergency actions. Such action by the Department will not void any guaranties or warranties or other obligations set forth in the Contract.

4. Burn-In Period Acceptance

The Department will make burn-in period acceptance after satisfactory completion of the required burn-in period and on the basis of a comprehensive field inspection of the complete CCTV system in accordance with the specifications. Upon burn-in period acceptance but prior to Final Acceptance of the entire Contract, maintain the complete CCTV system in accordance with the requirements of Subsection 936.3.07.

E. Bench Acceptance Test

For retrofit assemblies, perform the bench acceptance test as an onsite test for all assemblies furnished as shown in the Plans. Furnish a benchtop stand and associated hardware for the camera system assembly mount that securely holds the

camera system assembly while the camera is being operated. For the bench acceptance test, use a PC system, CCTV Embedded Protocol control software, and a color video monitor to demonstrate full operation of the CCTV site. Demonstrate operation to include picture quality, pan, tilt, focus, zoom, iris, position feedback, and communications address configuration.

936.3.07 Contractor Warranty and Maintenance

Provide a manufacturer's support (usual and customary warranties) period of three years for all equipment and materials furnished and installed as part of the pay item for CCTV system equipment and materials. Include warranties or guarantees for system camera assembly and mount, cabinet interface assembly, and cabling/connector. Begin warranty upon successful completion of the CCTV System burn in period and acceptance for maintenance.

Transfer Manufacturer’s and Contractor’s warranties or guarantees to the agency or user responsible for the CCTV system maintenance, The warranties and guarantees shall be continuous throughout their duration, and state that they are subject to such transfer.

936.3.08 Training

Provide installation, operations, and maintenance training on the CCTV equipment at a site in the project area. Personnel trained by the various equipment manufacturers and authorized by said manufacturers shall perform the training. Include in the cost of training all supplies, equipment, materials, handouts, travel, and subsistence necessary to conduct the training. Furnish a training notebook in a labeled 3-ring binder to each trainee.

Provide installation, operations and maintenance training for up to twelve (12) people. Include in this training both classroom training and hands-on training. Limit in-shop and in-field training to group sizes of four (4) people at a time. Conduct all training in half-day sessions. Two half-day sessions may be held on the same day. The total of the training shall consist of at least six (6) clock hours of training for each participant. Provide a course content of, at a minimum, the following:

- Installation of all CCTV equipment
- Operations of all CCTV equipment
- Explanation of video quality
- Maintenance of all CCTV components
- Use of the CCTV embedded protocol control software
- Measurement of video signals
- Discussion of all warrantee clauses
- Hands-on use of CCTV equipment in signal shop environment for each trainee
- In-field maintenance training
- Video Encoders and Decoders
- Installation of all digital video compression system equipment
- Explanation of MPEG-4 digitized video
- Maintenance of all digital video encoder and decoder system components including software
- Measurement of digital video signals
- Hands-on use of digital video transport system equipment for each trainee

CCTV and Encoders/Decoders training shall be provided in conjunction with the digital video transport system training specified in Section 939. The total of the CCTV and video transport system training shall consist of at least eight (8) clock hours of training for each participant. Meet all video transport system training requirements of Section 939.

936.4 Measurement

936.4.01 CCTV System

CCTV systems, Type B, are measured for payment by the number actually installed, complete, functional, and accepted. Unless otherwise specified in the Plans, furnish and install the following minimum items for a CCTV system:

- camera system assembly including the camera, lens, pan/tilt drive (except for Type D), control electronics and environmental enclosure.
- pole-mounting hardware.
- cabinet equipment, including but not limited to the cabinet interface assembly and all associated wiring, conductors, terminal blocks, and surge suppression.
- all weather heads, vertical conduit risers and conduit hardware on the CCTV support pole for power service, grounding, communications and control.
- all cables, connectors, hardware, interfaces, supplies, and any other items necessary for the proper operation and function of any CCTV system component with any other CCTV system component.

936.4.02 Encoders/Decoders

A. Video Encoders, Type B

Video Encoders, Type B, with rack mounting hardware are measured for payment by the number actually installed, complete, functional and accepted.

B. Video Encoders, Type C

Video Encoders, Type C, with rack mounting hardware are measured for payment by the number actually installed, complete, functional and accepted.

C. Video Decoders, Type B:

Video Decoders, Type B, with rack mounting hardware are measured for payment by the number actually installed, complete, functional and accepted.

D. Video Decoders, Type C:

Video Decoders, Type C, with rack mounting hardware are measured for payment by the number actually installed, complete, functional and accepted.

E. Video Decoders, Type D

Video Decoders, Type D, with rack mounting hardware are measured for payment by the number actually installed, complete, functional and accepted.

F. Video Decoders, Type E:

Video Decoders, Type E, with rack mounting hardware are measured for payment by the number actually installed, complete, functional and accepted.

936.4.03 Testing

Testing as described in section 936.3.06 is considered incidental to the cost of the camera systems and installation and shall not be paid for separately.

936.4.04 Training

Training is measured as a lump sum for all supplies, equipment, materials, handouts, travel, and subsistence necessary to conduct the training.

936.4.05 Limits

Not applicable

936.5 Payment

936.5.01 CCTV System

CCTV systems of the Type specified in the Plans are paid for at the Contract Unit Price. Payment is full compensation for furnishing and installing or delivering the CCTV system.

Payment for CCTV systems is made under:

Item No. 936	CCTV System, Type ___	Per each
Item No. 936	CCTV System, Type B, Retrofit Assembly	Per each
Item No. 936	CCTV System, Type ___, Retrofit Assembly (Furnish Only)	Per each
Item No. 936	CCTV Camera lowering system	Per each
Item No. 936	Video Encoder, Type ___	Per each
Item No. 936	Video Decoder, Type ___	Per each

936.5.02 Training

The Department will pay twenty-five (25%) of the total contract bid amount for training upon approval of the Training Plan. The Department will pay the remaining seventy-five (75%) after completion of all training as described in Subsection 936.3.08. The total sum of all payments cannot exceed the original contract amount for this item.

Payment for training is made under:

Item No. 936	Training	Lump Sum

936.5.03 Adjustments

Not applicable

Section 937—Detection Systems

937.1 General Description

This work includes the procurement and installation of a detection system as shown in the plans. Ensure the detection system is capable of traffic data collection meeting the general and specific requirements of this specification. Ensure the firmware and software furnished and installed as part of an Intelligent Transportation System (ITS) project are the most current and approved releases or versions, unless otherwise requested by the Department. Provide all equipment, materials, and work in accordance with all manufacturers' recommendations. All equipment, cables, and hardware must be part of an engineered system that is designed by the manufacturer to fully interoperate with all other system components.

A. Video Detection System (VDS)

Provide an IP/Ethernet video detection system which provides presence detection, vehicle counts, roadway occupancy, vehicle classification, and speed information to the Department's central ITS management software. The video detection system shall be able to provide a minimum of three programmable vehicle classifications. The video detection system shall be able to detect in both high speed freeway and intersection presence modes. The intersection presence Video Detection System processor type shall be used for detecting traffic for traffic signal and/or ramp meter controllers in a traffic signal or ramp meter cabinet using card rack vehicle detector input files. Video detection systems operating in a traffic signal installation shall not be required to provide occupancy or classification data. The freeway video detection system shall include all necessary rack enclosures to house the video processor. The video detection system includes, but

is not limited to, camera image sensor(s), including the detector housing, mounting hardware, an application programming interface (API) and protocol for system communications, a video detection system processor, central and local system management software, cabling between the detector and the cabinet, surge suppressors, terminations, output expansion modules which mount in the traffic signal controller cabinet input files, vertical conduit, weather heads and related equipment. The video detection system processors shall communicate through an Ethernet interface and TCP/IP (transmission control protocol/Internet protocol) connection to multiple Transportation Management Center (TMC) computers. The detection video shall be encoded within the VDS processor to MPEG4 digital video format and be able to be viewed at the TMC without the use of external encoders.

B. Microwave Vehicle Detection System (MVDS)

Provide a high resolution microwave radar detection system which provides presence detection, vehicle counts, classification, occupancy, and speed information to the Department's central ITS management software. The microwave radar detection system includes, but is not limited to, microwave/ radar detectors, including detector housing, mounting hardware, an application programming interface (API) and protocol for system communications, system management software, cabling between the microwave detector(s) and the cabinet, surge suppressors, terminations, and related equipment. The high resolution Microwave Vehicle Detection System shall be able to emulate single or dual zone loop detectors and be able to detect a minimum of 10 lanes with a range of up to 250 feet away. These microwave detection systems are typically used for gathering near real-time information about the flow of traffic on freeways, highways, or other designated roadway types. The MVDS shall be provided with all necessary cabling, surge protection devices and modules for local serial and IP/Ethernet communications.

C. Wireless Magnetometer Vehicle Detection (WMVD)

Provide a wireless in-pavement magnetometer system for use in both freeway and intersection applications. The detection system shall provide accurate vehicle count, occupancy and speed information, as well as presence/stop bar applications, as needed. The battery-powered wireless sensor shall consist of a magnetometer capable of low-power radio communications to a roadside transceiver, packaged in a small, hardened plastic case, suitable for in-pavement mounting. The sensors shall detect changes in the earth's magnetic field to determine the presence or absence of vehicles, relative to the detection zone. Detection 'events' are transmitted via wireless radio communications to a wired access point connected to the control cabinet. The wired access point shall utilize IP/Ethernet communication. The system includes, but is not limited to battery operated wireless sensors, battery operated wireless repeaters, wired access points with respective radios, mounting hardware, cabling, surge protection devices, jumper cables and all items necessary for a complete WMVD installation.

D. Short-Range Radio Device Detection System

Provide a Short-Range Radio Device detection system in which a roadside monitoring unit continually and passively listens for Short-Range Radio enabled devices that broadcast their BDADDR (or BADDR), also referred to as the MAC address. The addresses shall be passively collected in order to get vehicle probe data for use in determining travel time along a route. These devices shall not have the ability to correlate a MAC address with personal information, such as subscriber names and/or vehicle ownership information. This type of detection system shall not be used to collect highly accurate volume and occupancy of a roadway, but rather collect a sampling of vehicles in order to derive approximate speeds and travel time for a corridor. Provide separate, powered and surge protected enclosures for Short-Range Radio Device modules so that they may be installed in various cabinet types. All modules shall utilize IP/Ethernet communications, or cell modem by Type. The system includes, but is not limited to the Short-Range Radio Device processor, antenna, power supplies, mounting hardware, cabling, surge protection devices, jumper cables and all items necessary for a complete installation.

937.1.01 Definitions

General Provisions 101 through 150

937.1.02 Related References

A. Standard Specifications

Section 150 – Traffic Control

Section 639 – Strain Poles for Overhead Sign and Signal Assemblies

Section 647 – Traffic Signal Installation

Section 922 – Electrical Wire and Cable

Section 925 – Traffic Signal Equipment

Section 939 – Communication and Electronics Equipment

Section 940 – NaviGAtor Advanced Transportation Management System Integration

B. Referenced Documents

American National Standards Institute (ANSI)

American Society of Testing and Materials (ASTM)

EIA-170A

Electronic Industries Association (EIA) – 170A

FCC Part 15, Subparts J and B

National Electric Code (NEC) 210-19a., FPN No. 4

National Electrical Manufacturers Association (NEMA) TS1-1989 (R1994, R2000, R2005), Section 2.1.5.2, Section 2.1.12

NEMA TS-1-1989 (R1994, R2000, R2005)

NEMA TS2-2003 Type 2, Type 170 and Type 179 Standards

NEMA 250 Type 4 enclosure standards

Underwriter's Laboratory Incorporated (UL) Submittals

937.1.03 Submittals

Use only equipment and components that meet the requirements of these minimum specifications and the Department's Qualified Products List (QPL).

Provide submittal data for all equipment, materials, test procedures, and routine maintenance procedures required for these items as required in these Specifications.

For training, submit to the Engineer for consideration and approval a training schedule and all training materials within 60 calendar days from the NTP.

For each applicable vehicle detection system, submit to the Engineer for approval, two (2) hard copies and one (1) electronic copy of the manufacturer's descriptive literature (catalog cuts), technical data, operational documentation, service and maintenance documentation and all other materials required within these specifications. Electronic documents shall be placed on a CD as Adobe® pdf documents and delivered to the Engineer.

Provide as-built documentation of all detector installations after the completion of acceptance testing.

937.2 Materials

937.2.01 Video Detection System

Use a video camera sensor that is compatible with the video detection system processor and meets the following technical and functional requirements:

A. Requirements

1. Video Camera Sensor Type A

Furnish and install a video camera sensor that is compatible with both freeway and arterial video applications, and compatible with the required detection processor type. Send a video signal from the video camera sensor to the processor, using high resolution, video camera sensors as the primary video source for real-time vehicle detection. Utilize high-sensitivity optics in the video camera sensor to compensate for variations in lighting conditions, including blooming at night caused by headlights and minor vibration caused by wind. Include a heater at the front of the enclosure, or alternate method, to prevent the formation of ice and condensation in cold weather. Ensure that the heater does not interfere with the operation of the video camera sensor electronics, or cause interference with the video signal, where applicable. As a minimum, meet the following requirements for each video camera sensor assembly installation:

a. Use a 1/4" to 1" color interline or frame transfer charge coupled device (CCD).

b. Signal to Noise Ratio shall be greater than 47 dB

c. The video standard should be compliant with National Television System Committee (NTSC) Standard, RS-170A Compliant (available as EIA-170A specification)

d. Provide a lens with a minimum 18X zoom. Zoom and camera controls shall be over the camera coaxial video connector

e. A minimum resolution of 380 Horizontal Television Lines (TVL), 350 Vertical TVL

f. For Electromagnetic interference, ensure compliance with FCC Part 15, Subpart J, Class A device requirements, which apply to the video camera sensor and associated connected equipment in their installed condition

g. Power the video camera sensors with 115 VAC+/-10%, 60 Hz nominal +/-3 Hz. Size the power conductors from the power source to the camera input so that no more than a 3% voltage drop is experienced (NEC 210-19 a., FPN No. 4). Include a provision at the rear of the camera enclosure for a waterproof connection of power and video signal cables over a single weather-tight MilSpec connector. Provide power from the cabinet power source through a surge suppressor and then to the video camera sensor.

h. The Video camera sensor enclosure shall be installed in a light colored enclosure to limit solar heating. Meet NEMA 250 Type 4 enclosure standards for the enclosure and seal the enclosure to prevent sand, dirt, dust, salt and water from entering. Affix a sun shield visor to the front of the enclosure which is sufficiently adjustable to divert water away from the video camera sensor lens and also prevent direct sunlight from entering the iris when mounted in its installed location.

i. Provide a single run of non-spliced outdoor-rated power and coaxial video cabling from the sensor enclosure to the cabinet in accordance with the manufacturer’s recommendations. Interruptions in cable runs shall only be allowable for interfacing necessary surge protection devices. All connectors shall be professionally sealed to manufacturer recommendations.

j. Environmental: -34° C to + 60° C (-29° F to 140° F) operating ambient temperature rated, in 0% - 100% relative humidity

k. Shock and Vibration: Ensure that shock and vibration of the sensor adheres to NEMA TS2-2003 requirements .

2. Video Camera Sensor Type B

Furnish and install a thermal video camera sensor that is compatible with both freeway and arterial video applications, and compatible with the required detection processor type. Send a thermal video image from the thermal video camera sensor to the processor for real-time vehicle detection. Utilize thermal imaging to compensate for variations in lighting conditions, including blooming at night caused by headlights, rain and ice glare, and daytime cloud and sun position shadowing where a normal video camera sensor may not function as intended. Include a heater, or alternate method, to prevent the formation of ice and condensation in cold weather. Ensure that the heater does not interfere with the operation of the video camera sensor electronics, or cause interference with the

thermal video signal. As a minimum, meet the following requirements for each thermal video camera sensor assembly installation:

a. Use a long-life, uncooled Vanadium Oxide (VOx) Microbolometer for the detector sensor, with a spectral range of 7.5 – 13.5 µm.

b. The video standard should be compliant with NTSC Standard

c. The video shall have a minimum NTSC array format of 320 x 240, with a 76,800 effective resolution

d. For Electromagnetic interference, ensure compliance with FCC Part 15, Subpart B, Class B device requirements

e. Power: Input voltage shall be 90 – 240 VAC single phase, with standard operating voltage at 110 VAC. Power consumption shall be 1.7 Watts nominal at 110 VAC with a maximum of 18 Watts.

f. The thermal video camera sensor enclosure shall be installed in a light colored enclosure to limit solar heating and prolong equipment life

g. Provide a single run of non-spliced outdoor-rated power and coaxial video cabling from the sensor enclosure to the cabinet in accordance with the manufacturer's recommendations. Interruptions in cable runs shall only be allowable for interfacing necessary surge protection devices. All connectors shall be professionally sealed to manufacturer recommendations.

h. Environmental: -50° C to + 75° C (-58° F to 167° F) operating ambient temperature rated, in 0% - 95% relative humidity, with an IP66 rating.

3. Video Detection System Processor

a. Freeway Cabinet Mounting

The IP addressable, MPEG4 encoded video detection system processor shall be either shelf or rack mountable in a standard 19-inch rack assembly space conforming to Standard CEA-310, 2005, latest version/addendum. If the video processor is shelf mounted, the Contractor shall provide the shelf and the processor unit housing for each processor type. If the video detection system requires a 19" rack with powered backplane, the contractor shall provide the 19" rack and attach all power and communications cables according to manufacturer specifications. The video detection system processor shall be designed for mounting in an enclosed cabinet and/or Hub building without blower fans and mounting without insulation from other electronic devices such as power supplies, communications equipment, etc. The video detection system shall meet NEMA TS-2 temperature requirements.

Power the video detection system processor by 120 VAC, 60 Hz, single phase. If a transformer is required for a 12 or 24 VDC power requirement, the Contractor shall supply the transformer and/or enclosure and size it appropriately for the installation. Size power conductors from the power source for the video detection system processor input so that no more than a 3% voltage drop is experienced (NEC 210-19 a., FPN No. 4). The video detection system processor shall have transient protection that meets the requirements of NEMA TS1-1989 (R1994, R2000, R2005) and NEMA TS2-2003 standards.

- Video Detection System Processor, Type A
- Provide one (1) video inputs on the video detection system processor such that signals from one video camera sensor or other synchronous or non-synchronous video source can be processed in real time. Use BNC connectors on the processor for all video inputs. Use a BNC connector or RCA connector on the front of the video detection system processor for video output.
- Video Detection System Processor, Type B
- Provide at least two (2) video inputs on the video detection system processor such that signals from up to two (2) video camera sensors or other synchronous or non-synchronous video sources can be processed in real time in one cabinet. Use BNC connectors on the back of the video detection system processor for all video inputs. Use a BNC connector on the front or back of the video detection system processor for video output.
- Video Detection System Processor, Type C

- Provide at least four (4) video inputs on the video detection system processor such that signals from up to four (4) video camera sensors or other synchronous or non-synchronous video sources can be processed in real time in one cabinet. Use BNC connectors on the back of the video detection system processor for all video inputs. Use a BNC connector on the front or back of the video detection system processor for video output.

b. Signal or Ramp Meter Cabinet Mounting

Provide an IP addressable processor module, which performs video image processing and MPEG4 encoding, that completely fits within the loop detector slots of the traffic signal or ramp meter controller cabinet input file and that provides a standard relay closure detector input to the controller. Provide from one to four detector outputs through the processor module which communicate through the edge card connector. Use a module that is not wider than two standard input file slots. Include detection indicators on the front panel of the processor module for each channel of detection provided through that module to indicate detector output in real time when the system is operational. Include a BNC connector with gold plated center pin or RCA connector on-the front panel for video output to a Monitoring device, and include a RJ-45 Ethernet port connector on the front panel to connect and communicate the Programming Device.

Provide power to the processor modules through the signal or ramp cabinet detector input file, or the Output Expansion Module.

- Video Detection System Processor, Type D
- Provide one (1) video inputs on the video detection system processor such that signals from one video camera sensor or other synchronous or non-synchronous video source can be processed in real time. Use BNC connectors on the processor for all video inputs. Use a BNC connector or RCA connector on the front of the video detection system processor for video output.
- Video Detection System Processor, Type E
- Provide at least two (2) video inputs on the video detection system processor such that signals from up to two (2) video camera sensors or other synchronous or non-synchronous video sources can be processed in real time in one cabinet input file. Use BNC connectors on the back of the video detection system processor for all video inputs. Use a BNC connector on the front or back of the video detection system processor for video output.
- Video Detection System Processor, Type F
- Provide at least four (4) video inputs on the video detection system processor such that signals from up to four (4) video camera sensors or other synchronous or non-synchronous video sources can be processed in real time in one cabinet input file. Use BNC connectors on the back of the video detection system processor for all video inputs. Use a BNC connector on the front or back of the video detection system processor for video output.
- Environmental Requirements (All Types)
- Provide a video detection system processor that operates reliably in a typical roadside traffic cabinet environment. Provide internal cabinet equipment and a video detection system processor that meet the environmental requirements of NEMA TS1-1989 (R1994, R2000, R2005) and NEMA TS2 standards.
- Operating ambient temperature range: -29°F to 165°F (-34°C to 74°C). Additionally, include a heater to prevent the formation of ice and condensation in cold weather. Do not allow the heater to interfere with the operation of the video camera sensor electronics, or cause interference with the video signal.
- Humidity range**:** 5-95% humidity per NEMA TS1-1989 (R1994, R2000, R2005), Section 2.1.5.2.

B. Functional Requirements for Video Detection Systems (all Types)

This section defines the minimally required functional aspects of the system as well as the required accuracy levels. It also outlines the testing process that will be used to determine whether a proposed video detection system product meets these specifications.

1. Ensure that Video Detection Systems provides vehicle presence, speeds, vehicle counts and roadway occupancies on a lane-by-lane basis. Verify that the system can, at a minimum, emulate the output of a pair of 6 ft. by 6 ft. in-pavement loops spaced 16 ft. apart. Ensure that the Video Detection Processor is capable of providing a minimum

24 detection zones with one video camera sensor. Verify that the system responds with the accumulated traffic data as collected since the last request.

2. Verify that the detection system is IP-addressable and that all communication addresses are user programmable. Ensure the setup program assigns an IP address to the detection processor. Ensure that configuration to the system are either in serial format using an Electronic Industries Alliance (EIA) standard EIE-232 communication or an Internet Protocol (IP) interface as approved by GDOT's Information Technology group.
3. Verify that the traffic data collected by the Video Detection System, and the system configuration is stored within internal non-volatile memory within the video detection system processor. Perform software updates through an Ethernet, serial, or USB port. Verify that data can be retrieved from the system either locally or via requests from computers at the central Transportation Management Center (TMC) over the communications network.
4. Ensure the video detection system processor front panel includes a visual display of the status of each video input. Indicators shall display, at a minimum, the status of video detection system processor communications, the status of the video detection system processor, the status of communications, and whether or not each video camera sensor is actively detecting. The Video Processor shall allow a remote user with a standard web browser to gain remote access, collect data, control, and configure the VDS.
5. Ensure the Video Detection System includes computer software, which enables the user to program, calibrate, operate and view current status of all system features using a laptop computer, or network-connected workstation at the central TMC. Ensure the system allows the user to view live MPEG4 video from the image sensor with the programmed detectors overlaying the image. Ensure individual vehicle actuations can be viewed while observing the live MPEG4 encoded video.
6. Ensure the Video Detection System configuration data can be uploaded and saved to a laptop or TMC workstation computer for later re-loading to the video detection processor if necessary.
7. Ensure that the system offers an open Application Programming Interface (API) and software development kit (SDK) for GDOT developers and their consultants to integrate the Video Detection System with Central Software or other third-party software and systems. Furnish needed software licenses for the system.
8. Ensure the system user can use a laptop to reprogram, calibrate, adjust or alter any previously defined detector configurations in the field and also reprogram any detector configurations over the network or from a TMC workstation.
9. Provide software that can communicate concurrently between multiple users and multiple video detection processors on the same network without any interruption or conflict with the normal polling cycle.

C. Additional Functional Requirements for Signal and Ramp Meter Video Detection Systems (Type D, E, F)

1. System Hardware: Provide a detection system that does not require any equipment external to the traffic signal/ramp meter controller cabinet input file (excluding the video camera sensor, video camera sensor power connection, circuit breakers and surge protection for video or data). Mount the processor and expansion modules in the traffic signal/ramp meter controller cabinet input files, using the edge card connector to obtain power and provide contact closure outputs. Rewiring of the backplane or any other cabinet panel for the system is not permitted except for power and grounding for the interface panel, wiring from the video camera sensor to the loop detector panel for the video signal and wiring to obtain power for the video camera sensor.
2. Provide a system capable of providing a minimum of eight detector outputs per video camera sensor. Provide all detector outputs through edge card connectors of the processor module and output expansion module(s). Rewiring external to the edge connectors is not permitted for obtaining a minimum of eight outputs for one video camera sensor.

3. System Software System Processing Software: On the processor module that mounts in the traffic signal/ramp meter controller cabinet input file, include the software that processes the video camera sensor signals and converts the signals into detector outputs. Detect either approaching or receding vehicles in multiple lanes within the field of view (FOV) of each video camera sensor. Provide the capability of detecting vehicles in up to 24 detection zones per video camera sensor with the detection system. Allow the detection zones to be combined to form one output.

4. Detection Compensation: Provide the capability for the processor to compensate for camera movement attributable to temperature effects, wind shifting, pole sway, pole expansion, or vibration.

5. System Configuration Software: On the processor module, include the configuration software to program the detection system, including the detection zones.

6. On a monitoring device, display the detection zones superimposed on the video camera sensor's images. Provide the capability to create detection zones of varying size and shape to allow best coverage of the viewable roadway lanes and ramps. Provide the capability to save the detection zone format on the processor module card once drawn for a particular video camera sensor image. Provide the capability for the user to view the currently active detector zone format of the MPEG4 encoded processor module via a monitoring device.

   a. Confirmation: When viewing vehicle actuations in real time on the monitoring device, indicate the passage or presence of each vehicle detected by each detection zone by changing the color or intensity of that particular zone.

   b. Detection During Reconfiguration: Provide the capability for the detection system to continue detecting vehicles on all existing zones during reconfiguration, except on the zone that is being reconfigured.

   c. I-VDSn designation: I-VDSn refers to all of the specific VDS components necessary for operation and detection on one approach leg of an intersection. The "n" denotes the approach's through-movement controller phase in the nomenclature of a typical 8-phase dual-ring intersection operation (e.g., I-VDS2, I-VDS4, I-VDS6, I-VDS8) when four video camera sensors are installed. If more than four video camera sensors are installed, the "n" denotes the controller phase being detected in the nomenclature of a typical 8-phase dual ring intersection operation. I-VDSn is also used as a prefix to identify the individual VDS components of the "n" approach as follows:

      - I-VDSnVCS: the video camera sensor for approach "n"
      - I-VDSnCC: the coaxial cable from the video camera to the controller cabinet for approach "n"
      - I-VDSnPC: the video camera sensor power cable from the video camera to the controller cabinet for approach "n"
      - I-VDSnCSS: the coaxial cable surge suppressor in the controller cabinet for approach "n"
      - I-VDSnCJ: the coaxial jumper cable from the coaxial surge suppressor in the controller cabinet to the processor module or detector panel for approach "n"
      - I-VDSnPM: the processor module for approach "n", where a Processor Module, Type A is installed
      - I-VDSpn/snPM: the processor module for approach "pn" and "sn", where "pn" is the primary approach and "sn" is the secondary approach, where a Processor Module, Type B is installed.
      - Occupancy: individual lane occupancy measured in percent of time

   d. Ramp Meter Controller Cabinet Input File: A Ramp Meter Controller Cabinet Input File is a chassis within a traffic signal cabinet rack that has slots where a detector card provides detector output to the traffic signal controller through its edge card connectors. The backplane connector pin output of the edge connectors conforms to Georgia traffic signal controller cabinet standards for the cabinet type specified in the plans.

   e. I-VDSnnn: I-VDSnnn refers to all of the specific VDS components necessary for operation and detection related to ramp metering installations based on direction, type of detection and lane assignments The first "n" denotes

the approach direction (north, south, east or west) and the second "n" denotes the type of detection, P=Passage Detection Zones, D=Demand Detection Zones, Q=Queuing Detection Zones, ML=Mainline Detection Zones, the third "n" denotes the lane assignment (lane 1=L01, lane 2=L02,lane =L03, lane= L04), the (e.g., I-VDSnPL01, I-VDSsDL02, I-VDSeQL03, I-VDSwMLAL04). The typical ramp metering layout is shown below:

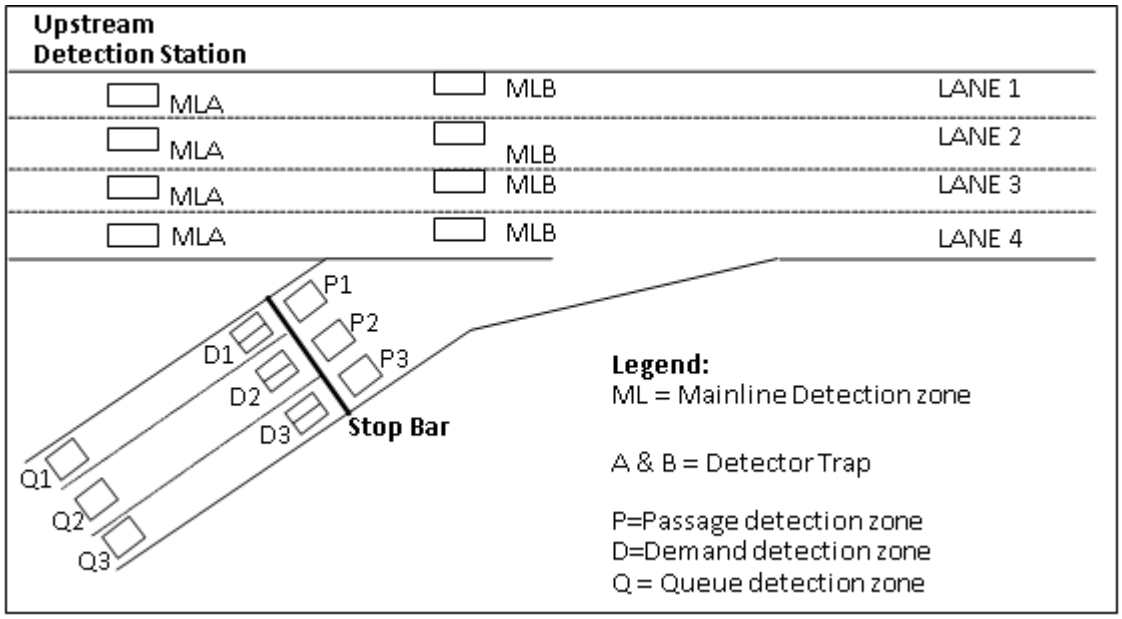

Figure 1: Typical Ramp Meter Layout

Lane numbering shall began at the median for mainline travel lanes. Lane numbering for ramp meter lanes shall began with the lane adjacent to the mainline travel lanes,

I-VDS is also used as a prefix to identify the individual I-VDS components used for signal and freeway ramp metering as follows:

- I-VDSnnnVCS: the video camera sensor for "nnn" direction, type of detection and lane assignment
- I-VDSnnnCC: the coaxial cable from the video camera to the controller cabinet for approach "nnn" direction, type of detection and lane assignment
- I-VDSnnnPC: the video camera sensor power cable from the video camera to the controller cabinet for approach "nnn" direction, type of detection and lane assignment
- I-VDSnnnCSS: the coaxial cable surge suppressor in the controller cabinet for approach "nnn" direction, type of detection and lane assignment
- I-VDSnnnCJ: the coaxial jumper cable from the coaxial surge suppressor in the controller cabinet to the processor module or detector panel for approach "nnn" direction, type of detection and lane assignment
- I-VDSnnnPM: the processor module for approach "nnn" direction , type of detection and lane assignment

D. Accuracy Requirements for Video Detection Systems

Provide a Video Detection System that meets the below minimum accuracy requirements for both daytime and night time conditions:

1. For volume (vehicle counts): 95% (no more than 5% missed actuations).
2. For speed measurement: 95% (no more than 5% error in speed calculation)
3. For occupancy measurement: 95% (no more than +/- 5% missed actuations)
4. For presence detection: 95% (no more than +/- 5% error in missed actuations)

E. Testing

Vendors are required to submit an independent test evaluation report from a third party which verifies the accuracies stated within their specifications.

Develop and submit plans for post-installation testing to the Engineer for consideration and approval. Ensure the plans test all functional requirements outlined in Section 937.2.01, and the accuracy requirements stipulated in Section 937.2.01 D. Provide the Engineer with Application Protocol Interface (API) documentation and Software Development Kit (SDK) for the video detection system, as requested by the Department. GDOT will have 30 days from receipt of the API and SDK to make a determination if it can be integrated. If the device cannot be integrated, the Engineer will give notice that the Contractor must submit a device that can be integrated into the central system software.

1. Post Installation Test Requirements

Utilize the following test procedures after the video detection system has been installed in its entirety as shown on the Plans. Commence no post-installation testing until all video detection systems in the project have been configured and/or calibrated to gather speed, volume, occupancy and/or presence detection, and programmed to communicate on the GDOT network. Including the accuracy testing requirements, at a minimum, provide the following on the test plan to be submitted and approved by the Engineer:

a. Inspect all vehicle detection system field components to ensure proper installation and cable termination.

b. Verify that field construction has been completed as specified in the plans.

c. Inspect the quality and tightness of ground and surge protector connections.

d. Check power supply voltage and outputs and ensure device connections are as specified in the Plans.

e. Verify that the installation of cables and connections between all detectors and field cabinets are as specified in the Plans

f. Demonstrate that each Video Detection System is fully operational and gathering the required data types at the specified interval. Perform this test from the hub building through which the detection system is connected.

g. Upon satisfactory completion of step f, GDOT will add the new video detection system(s) into the central system

937.2.02 Microwave Vehicle Detection System (MVDS)

A. Requirements

1. Microwave Detector

a. Provide a microwave detection system that meets the following minimum requirements**:**

Microwave Transmission: The microwave radar detector shall transmit on a frequency band of 24 (twenty-four) GHz or another approved spectral band. It shall comply with the limits for a Class A digital device, pursuant to Part 15 of the FCC rules or the appropriate Spectrum Management Authority. The Microwave Unit shall not interfere with any known equipment.

b. Area of Coverage

The Microwave Unit's field of view shall cover an area defined by an oval shaped beam and its maximum detection range shall be as follows:

- Elevation Beam Width 50 degrees or more
- Azimuth Beam Width 12 degrees or less
- Range 6 to 250 feet

c. Detection Zones

The minimum number of detection zones defined shall be no less than ten (10).

d. Capabilities

The Microwave Unit shall be a true presence detector. It shall be suitable for mounting on roadside poles or on overhead structures, at a mounting height determined by the manufacturer, to provide the following:

- Presence indication of moving or stopped vehicles in its detection zones.
- Traffic data, periodically accumulated over user defined time intervals in a 10 to 600 sec range, shall be transmitted via serial RS-485 communications lines to a serial port on the terminal server, provided by the Contractor and as specified in Specification 939.
- Traffic data shall be available simultaneously with detection zone contact closures and serial communications. Supply all modules as necessary for simultaneous communications.
- Side-fired configuration data shall include the following in each of up to Ten (10) detection zones (lanes):
  - Volume
  - Lane occupancy
  - Average speed

Vehicle classification by length in a minimum of 3 user defined classes.

Microwave Unit's in forward-looking configuration shall monitor traffic in one lane and be capable of providing the following data:

- Volume, occupancy, average speed and travel direction in the lane
- Per vehicle speed and direction
- Binning of Volume data in up to 7 speed bins
- MVDS shall allow the user to define the contents of transmitted data.
- Furnish the unit with the required software for data collection, processing, configuration and set-up, and data logging and retrieval. An operator shall be able to use the software to set detector count periods, sensitivities, and other operational features and parameters. The software must be capable of providing both manual and automatic setup and calibration.

e. Environmental Conditions and Protection

Except as stated otherwise herein, the equipment shall meet all its specified requirements during and after subjecting to any combination of the following:

- Ambient temperature range of -40° to +74° C
- Relative humidity from 5 to 95 percent, non-condensing
- Power surge of ± 1kV (rise time = 1.2 μsec, hold = 50μsec) applied in differential mode to all lines, power and output, as defined by IEC 1000-4-5 and EN 61000-4-5 standards or 300v TS2
- The microwave radar detector shall be resistant to vibration in accordance with IEC 68-2-30 (test Fc), NEMA TS-1 (Section 2.1.12), or approved equivalent
- The microwave detector shall be resistant to shock in accordance with IEC 68-2-27 (test a), NEMA TS-1 (Section 2.1.13), or approved equivalent

f. Mechanical

The microwave radar detector shall be enclosed in a rugged weather proof box and sealed to protect the unit from wind up to 90 mph, dust and airborne particles, and exposure to moisture (NEMA Type 3R or 4x enclosure).

The mounting assembly shall have all coated steel, stainless steel, or aluminium construction, and shall support a load of 20 pounds. The mounting assembly shall incorporate an approved mechanism that can be tilted in both axes and then locked into place, to provide the optimum area of coverage.

g. Electrical

The MVDS unit shall be operable from 12 - 24 VDC. Power supply shall be obtained from the MVDS communications wiring module in the device cabinet. Alternative power sources and adapters shall be submitted and approved by the Engineer.

The MVDS unit shall include Power Management features, allowing remote shutdown or cyclical shutdown of the unit.

h. Cables

Connection between the MVDS and the cabinet equipment shall be provided by a single MVDS unit harness cable that is MS-connector terminated at the MVDS detector and terminated to the MVDS communications wiring module in the equipment cabinets. No splices are permitted in the cable. The cable shall at a minimum provide power and the RS-485 serial data interface to the MVDS unit.

The MS connector pins must be crimped to the cable conductors and assembled and tested by the manufacturer prior to installation and pulling of cable on site. RS-485 signal ground shall be provided by the shield drain wire, an additional conductor, or an additional shielded pair, in accordance with the MVDS unit manufacturer's recommendations. Twisted pairs shall be identified by separate insulation colours. Communications pairs shall be individually or commonly shielded. Low voltage power conductors shall not be shielded in common with the communications pairs.

i. Electrical Isolation and Surge Protection

All power lines, contact closures and the serial port shall be surge protected within the unit. Contact closures and the serial port shall be isolated. Ensure that the surge protection of all cables and connections meets the minimum requirements of Section 925.2.02 A, part 14, Surge Protection.

j. Data Interface

Data communications shall be full duplex asynchronous, configurable as:

- Opto-isolated RS-485 port at rates from 9600 up to 115200 bits per second.
- Separate, local control RS232 serial port
- Serial data format shall be standard binary NRZ 8 bits data, 1 stop bit, No parity.
- Both point-to-point and multi-dropped configurations shall be supported.

B. Functional Requirements for Microwave Detection Systems

This section defines the minimally required functional aspects of the microwave detection system as well as the required accuracy levels. It also outlines the testing process that will be used to determine whether a proposed microwave detection system product meets these specifications.

1. Ensure that Microwave Detection Systems proposed for use provides vehicle presence, classification, speeds, vehicle counts and roadway occupancies on a lane-by-lane basis at a user definable reporting period between 20 to 600 seconds, and can detect a minimum of 10 detection zones where the farthest lane at ideal mounting height can detect at a maximum distance of 250 feet.

2. Verify that the traffic data collected by the Microwave Detection System is stored within internal non-volatile memory. Verify that data can be retrieved from the system either locally or via requests from computers at the central Transportation Management Center (TMC) over the communications network. Verify that the system configuration data and system software is also stored within internal non-volatile memory.

3. Ensure the Microwave Detection System includes computer software for the user to program, calibrate, operate and view current status of all system features using a laptop computer or network-connected workstation at the central TMC. Ensure the system allows the user to view live actuations from the microwave detector with the programmed detectors overlaying a representation of the roadway.

4. Ensure the Microwave Detection System configuration data can be uploaded and saved to a laptop or TMC workstation computer for later re-loading to the video detection processor if necessary. Ensure the system user can use a laptop or TMC workstation to reprogram, calibrate, adjust or alter any previously defined detector configurations. Ensure no periodic adjustments or fine-tuning is required except in the case of physical roadway changes such as lane-shifts, new construction or closures.

5. Ensure that the system offers an open Application Programming Interface (API) and software development kit (SDK) for GDOT developers and their consultants to integrate the Microwave Detection System with GDOT Central Software or other third-party software and systems. Furnish needed software licenses for the system.

C. Accuracy Requirements for Microwave Detection Systems

Provide a Microwave Detection System that meets the below minimum accuracy requirements for all conditions. Accuracy measurements for the testing shall be done with an appropriate sample size of vehicles, over a specific time period. Submit to the Engineer the Test plan for accuracy testing at the location that is site specific to the plans. The test plan shall take into account the roadway type (freeway, arterial), location (urban, rural), and traffic conditions in order to determine appropriate testing length and sample size. The following conditions shall be met for each sensor installed:

Measurement Accuracy

The following error levels shall be achievable and demonstrated during testing.

Parameter	Error Percentage
Presence	±5%
Volume	±8%
Lane Occupancy	±10%
Average Speed	±10%
Length Classification limits	±10%
Time event	10ms
Input Voltage	±2%

D. Testing

Develop and submit plans for post-installation testing to the Engineer for consideration and approval. Ensure the plans test all functional requirements outlined in Section 937.2.02 B and the accuracy requirements stipulated in Section 937.2.02 C. Provide the Engineer with Application Protocol Interface (API) documentation and Software Development Kit (SDK) for the microwave detection system. GDOT will have 30 days from receipt of the API and SDK to make a determination if it can be integrated. If the device cannot be integrated, the Engineer will give notice that the Contractor must submit a device that can be integrated into the central system software.

1. Post-installation test requirements

   Utilize the following test procedures after the microwave detection system has been installed in its entirety as shown on the Plans. Commence no post-installation testing until all microwave detection systems in the project have been configured and/or calibrated to gather speed, volume, classification, and occupancy and programmed to communicate on the GDOT network. Including the accuracy testing requirement, at a minimum, provide the following on the test plan to be submitted and approved by the Engineer.

   a. Inspect all microwave detection system field components to ensure proper installation and cable termination.

   b. Verify that field construction has been completed as specified in the plans.

   c. Inspect the quality and tightness of ground and surge protector connections.

d. Check power supply voltage and outputs and ensure device connections are as specified in the Plans.

e. Verify that the installation of cables and connections between all detectors and field cabinets are as specified in the Plans and in accordance with the manufacturers' recommendations.

f. Demonstrate that each Microwave Detection System is fully operational and gathering the required data types at the specified interval. Perform this test from the hub building through which the detection system is connected.

g. Upon satisfactory completion of step f, GDOT will add the new microwave detection system(s) into the central system

937.2.03 Wireless Magnetometer Vehicle Detector System (WMVD)

This specification sets forth the minimum requirements for a system to detect vehicles on a roadway by using battery-powered magnetometer-type sensors that communicate their detection data by radio to a roadside communications hub before the data is relayed to a freeway cabinet, a local traffic controller cabinet, a central software system, and/or a data server as required by the application. The application of the WMVDS and equipment specified shall be as shown in the plans. These specifications cover both intersection presence based vehicle detection used for traffic controller input, as well as freeway system or advanced system detection data collection of volume, occupancy and speed.

A. Requirements

The detection system shall provide accurate roadway information as needed to support the traffic management application.

1. The Wireless Battery-Powered Magnetometer Vehicle Detection System shall consist of one or more of the following:

   a. Battery-powered wireless sensors installed in-pavement in each traffic lane w/ reuse enclosure.

   b. Serial Port Protocol (SPP) Digital Radios mounted on the side of the roadway w/ cable and mount.

   c. Wireless battery-powered Repeaters (RPs) mounted on the side of the roadway, serving to extend the radio range of an SPP w/ mount.

   d. Access Point Contact Closure Interface (APCC) cards to provide sensor information processing and support the interface between an SPP and a standard traffic controller using contact closure signals, or mounted in a stand alone cabinet w/ direct IP communications.

   e. Extension (EX) contact closure cards to provide additional detector outputs to a traffic controller

   f. Isolation (ISO) Modules to provide surge protection and isolation, as well as providing signal conditioning to enhance the communication distance from the SPP and the APCC.

   g. Input/Output (I/O) Modules used to provide additional communication options, memory options and a battery backed real time clock.

   h. Software to control and configure the sensors, APCC, SPP's and RPs.

   i. Communications between a sensor and SPP can be direct, via a single repeater, or via two repeaters operating in tandem. Communications between the sensors and the SPP or RP and between the RP and SPP or another RP shall be via radio.

   j. Detection data shall be capable of being relayed from each AP to a local traffic controller for real-time vehicle detection using contact closure signals. Data shall also be capable of being relayed directly from each AP to a central software system or central server over standard IP (Internet Protocol) networks.

2. WMVD Sensor Type

a. All sensor components shall be contained within a single housing.

- The sensor housing shall conform to NEMA Type 6P and IEC IP68 standards.
- The sensor components shall be fully encapsulated within the housing to prevent moisture from degrading the components.

b. A sensor shall operate at temperatures from -37 ˚F /-38.3 ˚C to +176 ˚F / +80 ˚C.

c. A sensor shall be battery-powered with an average lifetime of ten (10) years when the sensor is configured for and operating under normal traffic conditions.

d. Two configurations of sensors shall be available from the manufacturer:

- Type A: shall provide all sensor functions, including data collection functions
- Type B: shall support presence detection only
- The drawings and/or plans shall dictate the sensor type required.

3. Serial Port Protocol (SPP) Device

a. An SPP shall support at least 48 sensors with a 0.125 second latency.

b. An SPP shall operate at temperatures from -37 ˚F / -38.3 ˚C to +176 ˚F / +80 ˚C.

c. All SPP components shall be contained within a single housing.

The SPP housing shall conform to NEMA Type 4X and IEC IP67 standards.

d. The SPP shall communicate to the APCC utilizing a standard CAT5e or higher Ethernet cable.

e. The SPP shall have a weatherproof Ethernet connector on the bottom.

f. The Ethernet connector shall be shipped with a cover firmly attached to provide protection from the elements prior to cable connection.

The weatherproof connector shall not require any specialized tools for installation.

4. WMVD Repeater (RP)

a. An RP communicating directly to an AP shall support at least 10 sensors.

b. An RP communicating to an AP via an intermediate RP (i.e., tandem operation) shall support at least 6 sensors.

c. An RP shall be battery-powered and battery shall last for a minimum of seven years when operating in normal traffic conditions.

d. The RP battery shall be field replaceable.

e. An RP shall operate at temperatures from -37 ˚F /-38.3 ˚C to +176 ˚F / +80 ˚C.

f. All RP components shall be contained within a single housing.

The RP housing shall conform to NEMA Type 4X and IEC IP67 standards.

5. WMVD Access Point Contact Closure (APCC) Card Type

a. Each APCC card shall be capable of communicating with at least 2 SPP modules.

b. Optional Extension (EX) cards shall provide additional contact closures in a signal cabinet (user configurable form 1 to 4 outputs each).

c. The APCC shall provide all the higher level processing and interface functions of the system.

d. Each APCC card shall provide detector data as contact closure signals to the traffic controller.

- Type A: An APCC card shall directly plug in to standard 170/2070 input files.
- Type B: An APCC card shall be supplied within a standard enclosure to supply power for use in freeway applications.

e. The APCC and EX cards front panel shall be either software or via front panel switches configurable to provide:

- Presence or pulse mode
- Delay timing
- Extension timing

f. An APCC and EX card shall operate at temperatures from -37 ˚F / -38.3 ˚C to +176 ˚F / +80 ˚C.

g. An APCC and EX card shall operate in humidity up to 95% (non-condensing).

6. Isolator module

a. An Isolator module shall be used between each SPP and APCC to extend communications range and protect the APCC card from transient surges.

b. The isolator module shall extend the communication range between the APCC and SPP from 33 feet (10 m) to 2000 feet (600 m).

c. The isolator module shall provide electrical isolation of 1500V.

d The isolator module shall provide surge protection of up to 1500V.

e. The isolator module shall provide AC power cross protection.

7. Input/Output (I/O) Module Type

An I/O module shall expand the capabilities of an APCC by adding a SD Memory Card Slot and battery backed up real time clock. The module shall be of the following types.

a. Type A: RS232 port for serial communications

b. Type B: Detection data shall be communicated as IP data over GSM-based cellular data services via a GPRS cellular modem.

c. Type C: Detection data shall be communicated as IP data over CDMA-based cellular data services via a 1xRTT cellular modem.

The I/O module shall be physically mounted to the APCC and shall be the same width. The combined APCC with I/O module shall be the width of a standard 2 slot wide detector amplifier.

B. Functional Requirements for Wireless Magnetometer Vehicle Detection

1. Sensors

Each sensor shall detect a vehicle by measuring changes in the earth's magnetic field near the sensor as caused by a stopped or passing vehicle (i.e., magnetometer-type detection)

a. The sensor shall communicate time-stamped ON and OFF vehicle detection events

b. Each sensor shall automatically recalibrate in the event of a detector lock

c. Each sensor shall communicate by radio to a nearby SPP or RP

d. Each sensor shall automatically re-transmit a detected event if no acknowledgement is received from the AP

e. Each sensor shall respond within 100 seconds when the AP is powered on and transmitting

2. The radio links between each sensor and SPP or RP and between each RP and SPP or each RP and RP shall conform to the following:
    a. The center frequencies, bandwidths, and transmit power levels of the radio links shall allow operation in an unlicensed frequency band
    b. Frequency channels shall be employed by the sensors, APs, and RPs to avoid interference with other devices operating in the unlicensed band
    c. Frequency channels shall be user-configurable
    d. At least 16 frequency channels shall be supported
3. If detection data is relayed to a central software system or central server, each installation of the Wireless Battery-Powered Magnetometer Vehicle Detection System shall provide the following measurements, as required by the application:
    a. Vehicle volume (count) per lane over a specified time interval
    b. Lane occupancy (percent) over a specified time interval
    c. Vehicle speed (mph or kph) when more than one sensor is deployed in a lane
    d. Per-vehicle speed
    e. Median speed over a specified time interval
    f. Mean speed over a specified time interval
    g. Distribution of speeds over a specified time interval
    h. Vehicle classification when more than one sensor is deployed in a lane
    i. Per-vehicle length
    j. Report distribution of vehicle lengths over a specified time interval
    k. The time interval for measurements shall be selectable from 30 seconds to 24 hours
4. Each sensor in an installation shall be capable of being individually configured with its own sensitivity level.
    a. A single sensor shall be capable of being configured with a sensitivity level that approximates the detection zone of a standard 6’ x 6’ / 1.8m x 1.8m inductive loop
    b. Each sensor shall be capable of being configured with relatively higher or lower sensitivity levels as may be required to detect bicycles, motorcycles, or light rail
    c. An APCC shall support the relay of sensor detection data through several interfaces as required by the application. The APCC shall be capable of simultaneously communicating detection data via the contact closure interface, Ethernet interface, and cellular data modem interface, as applicable.

C. Accuracy Requirements for the Wireless Magnetometer Vehicle Detection System

Provide a WMVD system that meets the below minimum accuracy requirements for all conditions. Accuracy measurements for the testing shall be done with an appropriate sample size of vehicles, over a specific time period. Submit to the Engineer the Test plan for accuracy testing at the location that is site specific to the plans. The test plan shall take into account the roadway type (freeway, arterial), location (urban, rural), and traffic conditions in order to determine appropriate testing length and sample size. The following conditions shall be met for each sensor installed:

D. Measurement Accuracy

The following error levels shall be achievable and demonstrated during testing.

Parameter	Error Percentage
Presence	±5%
Volume	±8%
Lane Occupancy	±10%
Average Speed	±10%
Length Classification limits	±10%

E. Testing

Develop and submit plans for post-installation testing to the Engineer for consideration and approval. Ensure the plans test all functional requirements outlined in Section 937.2.03B and the accuracy requirements stipulated in Section 937.2.03C. Provide the Engineer with Application Protocol Interface (API) documentation and Software Development Kit (SDK) for the WVDS detection system. GDOT will have 30 days from receipt of the API and SDK to make a determination if it can be integrated. If the device cannot be integrated, the Engineer will give notice that the Contractor must submit a device that can be integrated into the central system software. The testing shall prove that all in-pavement sensors are configured and collecting data as required in this specification and as shown on the plans.

1. Post-installation test procedures:
2. Utilize the following test procedures after the WVDS system has been installed in its entirety as shown on the Plans. Commence no post-installation testing until all WVDS systems in the project have been configured and/or calibrated to gather speed, volume, classification, occupancy, and/or presence and programmed to communicate on the GDOT network. Including the accuracy testing requirement, at a minimum, provide the following on the test plan to be submitted and approved by the Engineer:
    a. Inspect all detection system field components to ensure proper installation and cable termination.
    b. Verify that field construction has been completed as specified in the plans.
    c. Inspect the quality and tightness of cable, ground and surge protector connections.
    d. Check voltage and outputs and ensure device connections are as specified in the Plans and manufacturer recommendations.
    e. Verify that the installation of cables and connections between all APCC's and field cabinets are as specified in the Plans
    f. Demonstrate that each Wireless In-Pavement Vehicle Detection System is fully operational, communicating and gathering the required data types at the specified interval.

937.2.04 Short-Range Radio Device Detector System

The Short-Range Radio Device Detection System shall be capable of monitoring and measuring vehicular and pedestrian movement by identifying and comparing unique MAC (Media Access Control) addresses associated with Short-Range Radio enabled electronic devices. The system can be used to collect high quality, high-density travel times by sampling a portion of actual travel activity from the traffic stream of a predetermined route. The MAC address received by a sequence of two or more Short-Range Radio Device receivers shall be matched and used to develop a sample of travel time for that particular segment of the roadway, based on the relative detection times recorded by the adjacent units.

The Short-Range Radio enabled device (sensor) shall be an anonymous Short-Range Radio Device MAC address, which is a hardware identifier for the manufacturer and specific electronic device type. MAC addresses are not associated with any specific user account or any specific vehicle. The MAC address shall not be linked to a specific person through any type of

central database, but is assigned by the Short-Range Radio Device electronic chip manufacturer and shall not be tracked through the sales chain. Privacy concerns typically associated with alterative probe systems shall be eliminated.

A. Requirements (Type A, Type B, and Type C)

The Short-Range Radio Device Detection System shall be connected to, and work in conjunction with the support data processing system, located in a designated server at the TMC. All The Short-Range Radio Device Detection units shall adhere to the following requirements:

- Short-Range Radio Device: Class 1 Transceiver with 4 dB to 8 dB Omni Directional Antenna
- Environmental: - 30°C to +65°C, 5 – 90% humidity
- Connectivity: IP/Ethernet 10/100 Base-T (minimum)
- I/O ports: minimum one (1) RJ45 Ethernet port and one (1) RS-232 Configuration Serial Port

1. Short-Range Radio Device Detection System, Type A

   Provide a Short-Range Radio Device Detection System that can be installed in a typical signal or ITS cabinet. The unit shall be enclosed in its own housing and sit on a shelf within the cabinet. Utilize a conduit, as shown on the plans, for routing the antenna cable, and attach the antenna at the location shown on the plans. The power for the Short-Range Radio Device Detection System, Type A unit shall come from typical cabinet power (110 VAC) receptacles or terminal block. Supply all wiring for the Short-Range Radio Device Detection System Type A unit. Should the unit require a POE adapter or transformer to VDC, submit the adapter or transformer to the Department for review. The Contractor shall supply all surge protection devices for the external POE adapter or transformer.

2. Short-Range Radio Device Detection System, Type B

   Provide a Short-Range Radio Device Detection System that is self enclosed in a NEMA 4X enclosure that can be mounted to a pole, mast arm or cabinet structure. The voltage input shall be between 6 and 30 VDC, or be able to connect to 110 VAC with appropriate transformers and adapters, as determined by the Department. The Short-Range Radio Device Detection System Type B unit shall be wired to a cabinet or approved communication/power source, as shown on the plans. The unit shall not reside within the cabinet. Provide all grounding, wiring, adapters, transformers, and surge protection devices needed to support the Short-Range Radio Device Detection System Type B unit, as installed.

3. Short-Range Radio Device Detection System, Type C

   Provide a Short-Range Radio Device Detection System that is self enclosed in a NEMA 4X enclosure that can be mounted to a pole, mast arm or cabinet structure. Provide a Solar Power Array, which includes the solar panel, charging unit and batteries necessary for solar power. The Short-Range Radio Device Detection System Type C unit shall also include a GSM cellular modem with antennas, or approved equivalent. This Short-Range Radio Device Detection System type shall be a completely wireless installation. Provide all grounding, wiring, adapters, transformers, and surge protection devices needed to support the Short-Range Radio Device Detection System Type C unit, as installed.

4. Short-Range Radio Device Detection System Support Data System Software and Database

   Provide a Support Data System software package, including all necessary database 3rd party software required in order for the software to run as intended in support and conjunction of the Short-Range Radio Device sensor system. The software shall be installed on a server designated by the Department. It is the Contractor's responsibility to populate and configure the database for each field Short-Range Radio Device Detection System, and to test the accuracy of the data. The data shall be in an XML format compatible with the Department's central software. The software shall also display a real time chart or graph showing calculated travel time and speeds of the sampled vehicles and MAC address counts. The Short-Range Radio Device Detection System support software is required for

all new Short-Range Radio Device Detection System installations, but shall not be required for additional Short-Range Radio Device Detection System sensor installations on an existing network.

B. Functional Requirements for the Short-Range Radio Device Detection System

The sensor shall be capable of delivering data from both an Ethernet connection and a GSM wireless modem. The Short-Range Radio Device Detection sensor working in conjunction with the network's support data processing system must deliver real-time speed and travel time information in XML format to the central software system for routes where the sensors are deployed. The system shall be able to add multiple pairs of Short-Range Radio Device Detection sensors to form a network of manageable travel routes. Each route will display the data for the first and last sensor in addition to the travel-time and speed information for that segment. The Short-Range Radio Device Detection sensor shall be able to detect, at a minimum, within a radius of 300 feet when mounted on a pole or mast arm. The data processing shall be able to filter and 'throw out' MAC addresses that do not supply accurate information when compared to other device time stamps of the segment between two Short-Range Radio Detection devices. The data shall be smoothed, and be able to process median and mean average speeds. The following data shall be able to be compared and filtered, as needed, to deliver the most accurate information:

1. Pedestrians
2. Oversize Vehicles
3. Mass Transit (i.e. nearby trains or buses)

The Short-Range Radio Device Detection System equipment shall contain advanced features designed to allow the unit to operate efficiently in a remote environment. Diagnostic and configuration information shall be able to be viewed remotely, such that the health and operating status of the sensor is known. The system shall be designed to be able to automatically or remotely "reboot" if a condition is detected that requires such action.

C. Testing

Develop and submit plans for post-installation testing to the Engineer for consideration and approval. Ensure the plans test all functional requirements outlined in Section 937.2.03B. Provide the Engineer with the appropriate XML data interface, as necessary, for testing of the travel time accuracy and integration into the central software.

1. Post-installation test procedures: Utilize the following test procedures after the Short-Range Radio Device Detection System has been installed in its entirety as shown on the Plans. Commence no post-installation testing until all Short-Range Radio Device Detection sensors systems in the project have been configured, calibrated and programmed to communicate on the GDOT network to the support data system software. At a minimum, provide the following on the test plan to be submitted and approved by the Engineer:
    a. Inspect all Short-Range Radio Device Detection System field components to ensure proper installation and cable termination.
    b. Verify that field construction has been completed as specified in the plans.
    c. Inspect the quality and tightness of ground and surge protector connections.
    d. Check power supply voltage and outputs and ensure device connections are as specified in the Plans.
    e. Verify that the installation of cables and connections between all Short-Range Radio Device units, antennas and field cabinets and/or components are as specified in the Plans
    f. Demonstrate that each Short-Range Radio Device unit is fully operational and gathering the required data types at the specified and necessary interval.

937.3 Construction/Installation Requirements

This section shall include typical construction requirements for installing and configuring the vehicle detection systems. This specification only gives general requirements of installations. It is the Contractor's responsibility to be fully certified and trained in the detection technology application and the required installation of such devices by the manufacturer. All cable connections shall be manufacturer-rated and secured from outside elements. The Contractor shall be experienced and/or certified in proper cable/connector crimping and manufacturer sealing methods so as to ensure a water-tight and corrosion resistant installation. Wrap all other exposed cable connections with self sealing tape for weatherproofing and moisture seal.

Refer to Subsection 107.07 of the Specifications regarding proper conduct of The Work.

937.3.01 Personnel

All personnel shall be fully trained and manufacturer certified in the applicable vehicle detection installation application. When installing into a signal or ramp meter cabinet, the technician shall be minimum International Municipal Signal Association (IMSA) Level II certified.

937.3.02 Equipment

Use machinery such as trucks, derricks, bucket vehicles, saws, trenchers, and other equipment necessary for the work and approved by the Engineer prior to installation operations.

937.3.03 Preparation

Utility Permits

A. Application

Apply for, obtain, and pay for utility services, and pole attachment permits required in the Plans.

B. Maintenance

Maintain these utility services until Final Acceptance of each installation. After Final Acceptance, transfer these services and permits to the Department, local government or jurisdiction responsible for maintenance and operation. Ensure that the transfer does not interrupt service.

C. Utility Location

When installing aerial cable of any type, ensure that overhead clearance and separation requirements conform to local utility company standards, OSHA, the NEC and the NESC. Refer to the Standard Details Drawings for further information on utility clearances.

937.3.04 Fabrication

General Provisions 101 through 150.

937.3.05 Construction

A. Video Detection System Installation Requirements

1. General Installation Requirements:

    a. Install all video camera sensors, video detection system processors, output expansion modules, and associated enclosures and equipment at the locations specified in the Plans and per manufacturer recommendations. For traffic signal/ramp meter controller cabinets (Type D, E, and F processors), mount the processor and output expansion modules within the input files, or at a location as designated by the Engineer. Physical changes to the cabinet input files are not permitted. Make all necessary adjustments and modifications to the detection system prior to obtaining recommendation for system acceptance testing. For freeway applications (Type A, B and C processors), install all rack-mounted equipment with one rack unit space between adjacent equipment in the freeway ITS cabinet.

b. Installation, surge protection and all cabling shall comply with manufacturer's recommendation, at a minimum, or as specified in these plans. All equipment, cables, and hardware must be part of an engineered system that is designed by the manufacturer to fully interoperate with all other system components and be fully protected from all surge potential. Connectors installed outside the cabinets and enclosures shall be manufacturer terminated and be corrosion resistant, weather proof, and watertight. Use a UL listed cable that is ozone and UV resistant and weather resistant. Label cables with permanent cable labels at each end.

c. Wiring and cables must be continuous (without splices) between the VDS camera sensor and processor, except for surge protection connections between sensor and cabinet, so that both the camera and processor are appropriately protected. Coil a minimum of 6 feet of slack in the bottom of the controller or freeway cabinet. Tape ends of unused and spare conductors to prevent accidental contact to other circuits. Label conductors inside the cabinet for the functions depicted in the approved detailed diagrams of the cabinet and VDS documents.

d. Furnish an as-built cabinet wiring diagram, identified by location, for each VDS cabinet. Include all wiring, cabling, connections, and camera mounting height. Place all documentation in a weatherproof holder in the cabinet.

e. For freeway installations (Type A, B and C processors), install VDS power supply or transformer on a standard DIN rail using standard mounting hardware and power conductors wired to terminal blocks in the cabinet.

2. Camera Sensor Installation (all Types)

Adjust the video camera sensor lens as recommended by the manufacturer, and as required to minimize vehicle occlusion. For Type A camera sensors, aim the camera so that no part of the horizon is in the video image so as to protect it from the effects of the sun. Mount the camera on the specified pole or structure for that location as shown on the plans.

Mounting Bracket Assembly: Mount the video camera sensor on a mounting bracket such that its height and position provide a clear view of the approach or lanes. Mount the video camera sensor securely such that it is stable and steady. The mounting bracket assembly includes a video camera sensor mounting bracket, nipple pipe, cable-mount nipple clamp, and all associated hardware and materials. Mount the video camera sensor on a mounting bracket assembly which meets the following requirements unless otherwise specified in the plans:

a. Use stainless steel fastening hardware with lock washers on threaded fasteners

b. Use a video camera sensor enclosure mounting bracket that is non-rusting and is made from die cast aluminum, extruded aluminum, powder-coated galvanized steel or hot dipped galvanized steel. Provide a mounting bracket that permits vertical and horizontal adjustment of the video camera sensor. Provide a mounting bracket that securely fastens to the video camera sensor enclosure and mounts to the nipple pipe by threading onto the pipe or as a slip-fit, using a set-screw fastener in either above method.

c. Use a 1 ½" (38 mm) aluminum nipple pipe that is threaded on both ends.

d. Fasten the nipple pipe to the mast arm using a cable mount nipple clamp with minimum 2 5/16" (58 mm) U bolts. Use aircraft grade galvanized steel cables with stainless steel fastening hardware and that make at least two wraps around the mast arm. Do not use banding straps.

Install all VDS equipment into a cabinet type as shown in the plans with the following equipment:

3. Cabinet Equipment (All Types)

a. Wiring, Conductors and Terminal Blocks: Use stranded copper for all conductors, including those in jacketed cables, except for earth ground conductors, which may be solid copper. Neatly arrange all wiring, firmly lace or bundle it, and mechanically secure the wiring without the use of adhesive fasteners. Route and secure all wiring and cabling to avoid sharp edges and to avoid conflicts with other equipment or cabling. Route camera control

wiring, and 120 VAC power wiring separately. Terminate all wiring on a terminal block, strip, bussbar, or device clamp or lug; do not splice any wiring. Use a minimum #12 AWG for all conductors of 120 VAC circuits, or as recommended by the manufacturer of the VDS device.

Label coaxial cables for VDS cameras. Number all terminal blocks, terminal strips, circuit breakers and bussbar breakers and have each item and each terminal position numbered and named according to function. Labels shall be weather and wear resistant.

b. Surge Protection: Protect all copper wiring and cabling entering the cabinet housing by surge protection devices as specified in these specifications and per Section 925.2.02 Section A, part 14. Terminate all wiring between cabinet devices and the transient surge protection devices, except for the video signal coaxial feed, on terminal strips. Use a minimum #16 AWG grounding of each surge protection device, or larger if recommended by the surge protection device manufacturer. Do not "daisy chain" with the grounding wires of other devices including other surge suppressors. Dress and route grounding wires separately from all other cabinet wiring. Install grounding wires with the absolute minimum length possible between the surge protection device and the ground bussbar. Label all surge protection devices with silk-screened lettering on the mounting panel.

   Furnish and install a surge suppressor for each video signal coaxial line. Install a BNC connector, three stage surge protection device for the coax cable that employs gas discharge tubes, series current limiting components, and secondary 'fine' protection. The coax surge protection device shall have a surge current rating of 10 kA. For each cabinet housing, include surge protection devices for the VDS camera power lines installed on the terminal bloc.

   All surge protection shall be furnished and installed by the Contractor to protect not only the cabinet processor, but the camera sensor itself from ground rise potential (i.e. surge up to the camera sensor).

c. Documentation: Provide the following documentation in a waterproof documentation pouch in each cabinet:

   - One operation manual with programming instructions
   - One maintenance manual with schematics
   - Three legible wiring prints showing all VDS components, model and serial number and connections with the cabinet

4. Cabinet Equipment (Type A, B, and C)

   a. Component Installation: Fasten all components of the cabinet assembly to be mounted on cabinet side panels with hex-head or Phillips-head machine screws. Install the screws into tapped and threaded holes in the panels. These components include but are not limited to terminal blocks, bussbars, panel and socket mounted surge protection devices, accessory and equipment outlets, and DC power supply chassis. Fasten all other cabinet components with hex-head or Phillips-head machine screws insulated with nuts (with locking washer or insert) or into tapped and threaded holes. All fastener heads and nuts (when used) shall be fully accessible within a complete cabinet assembly, and any component shall be removable without requiring removal of other components, panels, or mounting rails. Do not use self-tapping or self-threading fasteners.

5. Cabinet Equipment (Type D, E, and F)

   a. Exercise extreme caution when installing VDS equipment and materials at traffic signal/ramp meter installations. Installation technicians accessing a signal cabinet shall be accompanied by a certified (minimum) International Municipal Signal Association (IMSA) Level II traffic signal technician. Repair any damage to existing traffic/ramp meter control equipment and materials which occurred during VDS installation to the Engineer's satisfaction at the Contractor's sole expense.

   b. In 336S cabinets, locate the VDS power termination panel on the equipment rail in the lower left portion of the rear of the cabinet as shown in the details and plans. Adjust the panel as far toward the cabinet sidewall as possible while still providing access to the circuit breaker. Notify the Engineer immediately if there is any

conflict with existing cabinet equipment in this position. Ensure that there is no conflict with door-mounted components when the door is closed.

c. In 332 and 334 cabinets, locate the VDS coax termination panel in the lower open section of the front of the cabinet equipment rack as shown in the details. Notify the Engineer immediately if there is any conflict with existing cabinet equipment in this position. Ensure that there is no conflict with door-mounted components when the door is closed. Dress, label, and secure all coaxial cabling to and from the coax termination panel such that the panel can be hinged open a minimum of 90 degrees without binding or stressing any coaxial cable.

B. Microwave Detection System Installation Requirements

1. General Installation Requirements

Install all detectors and associated equipment at the locations specified in the Plans. Installation must comply with manufacturer's recommendation. All detector equipment, cables, and hardware must be part of an engineered system that is designed by the manufacturer to fully interoperate with all other system components for the Microwave Detection System. Surge protection devices must be approved by the manufacturer, and must be of quality or better than manufacturer recommendations.

2. Detector

Furnish and Install the microwave radar detector on poles as shown in the plans using Contractor supplied materials and brackets. Install the microwave radar detector to achieve the field of coverage shown in the Plans. Aiming and alignment shall be per the manufacturer's recommendations. The Contractor shall verify height requirements based on manufacturer recommendations and shall notify the Engineer should the mounting height vary from the plans. It is the Contractor's responsibility to make all field adjustments to the locations shown in the Plans, in order to match manufacturer recommendations for operation. All field adjustments shall be approved by the Engineer. The Contractor shall use his laptop to setup the detection zones using detector manufacturer specific software. Use only the latest software that is compatible with the detector, as provided by the manufacturer. Use mounting hardware that meets hardware specifications as described in the Video Detection System Installation Requirements, mounting hardware assembly.

3. Cabinet Equipment

a. Wiring, Conductors, and Terminal Blocks: Furnish and Install a manufacturer terminated cable of length necessary for the detector installation. Use only cables provided by the manufacturer of the detection system. The detector end-connector shall be manufacturer assembled and tested prior to installation. It shall be completely watertight and weather resistant. All cabling shall be UV rated for outdoor and underground use. Use only stranded copper for all conductors, including those in jacketed cables, except for earth ground conductors, which may be solid copper. Neatly arrange all wiring, firmly lace or bundle it, and mechanically secure the wiring without the use of adhesive fasteners. Route and secure all wiring and cabling to avoid sharp edges and to avoid conflicts with other equipment or cabling. Route microwave radar detector control wiring and 120VAC power wiring separately so as no transient voltage bleeds over to the detector cable. Terminate all wiring on a terminal block, strip, bussbar, or device clamp or lug; do not splice any wiring from the detector unit to the terminal blocks.

Number and label all terminal blocks, terminal strips, circuit breakers and bussbar breakers and have each item and each terminal position numbered and named according to function. Label terminal blocks, terminal strips, circuit breakers and bussbars with weather and wear resistant labels.

b. Surge Protection Devices (SPD): Protect all copper wiring and cabling entering the cabinet housing by surge protection devices as specified in this specification and the minimum requirements of Section 925.2.02 Section A, part 14. Terminate all wiring between cabinet devices and the transient surge protection devices and between

the microwave radar detection unit and the surge protectors on terminal strips. Use a minimum #16 AWG grounding for each surge protection device, or larger if recommended by the surge protection device manufacturer. Use insulated green wire and connect the ground wire directly to the ground bussbar. Do not "daisy chain" with the grounding wires of other devices including other surge protection devices. Dress and route grounding wires separately from all other cabinet wiring. Install grounding wires with the absolute minimum length possible between the suppressor and the ground bussbar. Label all surge suppressors with silk-screened lettering on the mounting panel.

Furnish and install all necessary transient surge protection devices for the microwave radar detection units such that the detector and cabinet equipment are protected.

c. Component Installation: Fasten all components of the cabinet assembly to be mounted on cabinet side panels with hex-head or Phillips-head machine screws. Install the screws into tapped and threaded holes in the panels. The components include but are not limited to terminal blocks, bussbars, panel and socket mounted surge protectors, terminal servers, Ethernet switches, circuit breakers, and accessory and equipment outlets. Fasten all other cabinet components with hex-head or Phillips-head machine screws installed with nuts (with locking washer or insert) or into tapped and threaded holes. Fasten stud-mounted components to a mounting bracket providing complete access to the studs and mounting nuts. All fastener heads and nuts (when used) shall be fully accessible within a complete cabinet assembly, and any component shall be removable without requiring removal of other components, panels, or mounting rails. Do not use self-tapping of or self-threading fasteners.

d. As-Built Drawings: Furnish an as-built cabinet wiring diagram, identified by location, for each cabinet. Include label names and numbering, surge protection devices (SPD's), wiring, cabling, and connections. Place all documentation in a weatherproof holder in the cabinet.

4. Cables, Conduit and Power Service

Furnish and install electrical cables used for control, communications signaling and power supply as required by the manufacturer. Do not splice any cable, shield or conductor used for control, communications signaling, or power supply. Identify all conductors of all cables by color and number. Identify the conductor function in as-built documentation included in the cabinet documentation. After termination and dressing the cables in the cabinet, neatly coil and store a minimum of 6 ft of cable slack in the bottom of the cabinet. Cut unused conductors to a length that can reach any appropriate terminal. Bend back unused conductors over their outer jackets and individually tape them.

Install cabling inside new hollow metal or concrete support poles unless otherwise specified. Where devices are installed on existing wood poles, install cabling on the wood poles in rigid metal conduit risers of minimum 2 inch (5.08 cm) diameter. Use weatherheads on all nipple and conduit openings. Neatly install and route cabling to minimize movement in the wind and chafing against the pole, device or bracket. Form a drip loop at the weather head and route cabling to minimize water entry into the cable connector. Use a 24" diameter drip loop where cables enter a weatherhead.

5. As-Built Drawings

Furnish as-built drawings that include the cabinet wiring diagrams as outlined in 2d above. As-built drawings shall include but not be limited to microwave radar detection locations, microwave radar detection mounting heights, and component lists with brand, model and serial numbers. Place one copy of the as-built drawings in the cabinet documentation pouch and submit another copy to the Engineer.

C. Wireless Magnetometer Vehicle Detection

1. General Installation Requirements

Each installation of the Wireless Battery-Powered Magnetometer Vehicle Detection System shall consist of one or more sensors installed in the center of each traffic lane, avoiding sources of magnetic noise such as underground

power cables, overhead high tension power cables, light rail or subway tracks, and power generation stations and sub-stations.

a. The sensors shall be located as specified by the plans

b. For count applications, sensors shall be placed in areas with minimum stop-and-go traffic flow

c. If vehicle speeds are to be determined by the system, then at least two sensors are required in each lane, separated according to the anticipated average vehicle speed.

- If the anticipated average vehicle speed is less than 25 mph / 40 kph, the spacing between sensors shall be approximately 10 feet / 3 meters (and measured precisely at the time of installation in order to properly configure the system)
- If the anticipated average vehicle speed is greater than 25 mph / 40 kph but less than 45 mph / 75 kph, the spacing between sensors shall be approximately 10 to 12 feet / 3.1 to 3.7 meters (and measured precisely at the time of installation in order to properly configure the system)
- If the anticipated average vehicle speed is greater than 45 mph / 75 kph, the spacing between sensors shall be approximately 20 to 24 feet / 6.1 to 7.3 meters (and measured precisely at the time of installation in order to properly configure the system)

Prior to installation, the contractor shall provide personnel that have been certified by the manufacturer to test and pre-configure the components, including assigning channels and sensors to SPP, RP's, etc. The Contractor shall record all detection component ID numbers on a project plans drawing or intersection detail prior to installation, and supply all drawings showing the recordings as part of the as-builts at the end of the project. The Contractor shall install each sensor in the roadway per Manufacturer's recommendations. The contractor will install Type B sensors for stop bar detection only, where presence is only required, and Type A sensors will be deployed for all other detection applications.

2. Sensor Installation:

For a sensor installed just below the roadway surface:

a. The roadway shall be core drilled to provide a 4" diameter hole, a minimum 2.25" / 5.7 cm deep

b. The sensor shall be placed inside a small, clear plastic shell formed to provide a tight fit around the sensor.

c. A small layer of epoxy approximately 1.25" / 3.2 cm shall be applied to the bottom of the cored hole.

d. The epoxy must adhere to the following requirements:

- The epoxy shall be a two part poly-urea based joint sealant.
- It shall have self leveling characteristics.
- The surface the epoxy will be bonding to shall be free of debris, moisture and anything else which might interfere with the bonding process.

e. The epoxy shall be approved by the manufacturer of the detection system

f. The sensor shall then be placed on top of this layer of epoxy in the correct orientation as clearly marked on the sensor

g. The sensor shall be fully encapsulated with the epoxy to the lip of the cored hole

3. Sensor to Repeater, or Sensor to SPP Installation:

The maximum distance between a sensor installed in the roadway and an SPP or an RP with a clear line-of-sight between devices shall be:

a. At least 175 feet / 53 meters for an SPP or RP installed 30 feet / 9 meters above the roadway

b. At least 150 feet / 46 meters for an SPP or RP installed 20 feet / 6 meters above the roadway

c. At least 125 feet / 38 meters for an SPP or RP installed 16 feet / 5 meters above the roadway

d. The maximum distance between an SPP and an RP or between an RP and another RP shall be at least 750 feet / 228.6 meters when both units are installed 18 feet / 5.5 meters above the roadway and with a clear line-of-sight between devices

4. Repeater to SPP Installation:

Maximum wireless distances shall be based on the following:

a. SPP or Repeater front of the housing shall be aimed directly at the device (SPP, RP or Sensor) it is communicating with

b. Deviations from the centerline of the front of the SPP or RP shall reduce the effective distance of communication

D. Short-Range Radio Device Detection System Installation Requirements

1. General Installation Requirements

a. Install the Short-Range Radio Device Detection antenna and/or NEMA 4X enclosure on poles as shown in the plans using Contractor supplied materials and brackets. Install the Short-Range Radio Device Detector to achieve the field of coverage shown in the Plans. Make field adjustments to the locations shown in the Plans only with the Engineer's approval.

b. The minimum recommended mounting height for the Short-Range Radio Device sensor antenna shall be 10 feet above grade, unless otherwise approved by the Engineer. When using a solar power supply the panel shall be mounted in accordance with environmental and location geographic conditions, and as shown and noted in the plans. It shall be the Contractor's responsibility to tune the sensor for best coverage of the roadway vehicles being detected.

c. All mounting hardware shall be stainless steel or aluminum, and shall not be susceptible to weather and rusting. Use mounting hardware specifications as outlined in the Video Detection System Installation Requirements. Route all cabling within new conduit, unless otherwise approved by the Engineer. Protect the Short-Range Radio Device processor from the antenna with a surge protection device of specification recommended by the manufacturer.

d. It is the Contractor's responsibility to populate and configure the database and support data system software package and to test the accuracy of the data. Each Short-Range Radio Device Detector shall be configured in the software and show that it is taking a representative sample of vehicles from the traffic stream.

937.3.06 Quality Acceptance/Testing

The acceptance testing of the vehicle detection systems shall consist of two phases: 1) post installation detection system site testing, as outlined in the specific detection technology sections; and 2) burn-in period. Perform acceptance testing for all equipment, hardware and work as provided under this Contract. Perform all testing in the presence of the Engineer. Submit all testing plans and documents to the Engineer during the submittal phase of the vehicle detection equipment.

A. Burn-in Period

1. General Requirements

a. Provide a 30-day burn-in period for all work and equipment included in the Contract and associated with the vehicle detection equipment. The burn-in period shall consist of the field operation of the specific vehicle detection system in a manner that is in full accordance with the requirements of the Plans and Specifications.

b. Conduct only one (1) burn-in period on the entire Contract for all vehicle detection devices. Commence with the burn-in period only after meeting all of the following requirements:

- All work required in all Contract documents for the vehicle detection system project-wide has been completed and inspected by the Engineer.
- Successfully complete the Post-Installation Vehicle Detection System Site Testing.

c. Commence with the burn-in period upon written authorization by the Department to commence. Terminate the burn-in period 30 consecutive days thereafter unless an equipment malfunction occurs. Stop the burn-in period for the length of time any equipment is defective. After repairing the equipment so that it functions properly, resume the burn-in period at the point it was stopped.

d. Successful completion and acceptance of the burn-in period will be granted on the 31st day unless any equipment has malfunctioned. If any equipment has failed during the burn-in period, final acceptance will be withheld until all the equipment is functioning properly.

e. When one specific piece of equipment has malfunctioned more than three times during the 30 day burn-in period, replace that unit with a new unit at no cost to the Department. Multiple failures of detection devices in different locations shall be determined as a failure of the 30 day burn-in period. The Contractor shall investigate the detection system failure and shall give a full report to the Engineer. The Contractor shall replace the failed devices and shall restart the burn-in period at Day 1, once those devices have been replaced and retested.

2. Contractor Responsibilities

   During the burn-in period, maintain all work under this Contract in accordance with the Specifications. Restore any work or equipment to proper operating condition within 12 hours after notification.

3. Department Responsibilities

   Department responsibilities during the burn-in period will be as follows:

   - Expeditious notification of Contractor upon failure or malfunction of equipment
   - In the event that the Contractor does not provide the services enumerated above under his Contract responsibilities, the Department or its authorized agents may in the interest of public safety take emergency action to provide for adequate traffic control. Pay any costs incurred as a result of these emergency actions. Such action by the Department will not void any guaranties or warranties or other obligations set forth in the Contract.

4. Burn-In Period Acceptance

   The Department will make burn-in period acceptance after satisfactory completion of the required burn-in period and on the basis of a comprehensive field inspection of the complete vehicle detection system in accordance with the Specifications. Upon burn-in period acceptance but prior to Final Acceptance of the entire Contract, maintain the complete vehicle detection system in accordance with the specifications.

937.3.07 Contractor Warranty and Maintenance

Provide all manufacturers' warranties and guarantees for all equipment purchased and turned over to the Department as part of this contract. Ensure equipment provided under this specification shall be warranted by the manufacturer to be free from defects in materials and workmanship for a period of a minimum of three (3) years from Project Final Acceptance.

Ensure that manufacturer's and supplier's warranties and guarantees are transferable to the agency or user that is responsible for maintenance, are continuous throughout their duration and state that they are subject to such transfer.

Ensure the manufacturer will repair any faulty equipment during this period at no charge to the Department for parts, labor or shipping to and from the factory. When the Department detects a failure of any component of the system during the warranty period, the Department will notify the Contractor, Distributor, and/or Manufacturer in writing of the problem.

During the warranty period, supply any firmware or software upgrades associated with the detection system to the Department at no charge. In addition, provide phone consultation as needed at no cost during the warranty period for operating questions or problems that arise.

If the Department desires, it may enter into a separate agreement with the suppliers for technical support and software upgrades. Make available such a program to the Department after the original warranty period.

937.3.08 Training

Provide a minimum of at least eight (8) hours of configuration and maintenance training. The persons to be trained will be determined by the Engineer. Configuration training should last a minimum of three (3) hours and must include instructions for programming, hands on training in programming detection zones, adjusting, and calibrating the detection system. One hands on unit shall be provided per attendee during training. Operation and Maintenance training should last a minimum of five (5) hours and must include instructions on troubleshooting, maintenance, and operation for all detection system components. Each class will have a maximum of eight (8) people. The contractor must provide a training notebook to each trainee and an electronic copy of the training notebook to the Engineer.

The contractor must provide a location for holding the courses and pay all costs associated with travel and accommodation of the trainees if training is conducted away from the project area.

Notify the Engineer 20 days before training and agree on a time and place to conduct the training. If agreement cannot be reached, the Engineer will determine the time.

937.4 Measurement

937.4.01 Video Detection System

A. Video Camera Sensor Assembly (All Types)

Video camera sensor assemblies are measured for payment per each actually installed, complete, functional, and accepted. Unless otherwise specified in the Plans, furnish and install the following minimum items for a video camera sensor assembly.

1. Camera, environmental enclosure, and mounting assembly with all associated hardware.
2. Cabinet equipment, including but not limited to wiring, conductors, terminal blocks, surge protection devices, and mounting panels
3. All weather heads, vertical conduit risers, and conduit hardware on the VDS support pole for power service, grounding, communications, and control. If VDS and CCTV are mounted on the same pole, install common weather heads, conduit risers, and conduit hardware under Section 936 of the Specifications.
4. All hardware and materials necessary to provide electrical power service to the VDS field location as shown in the Plans, including but not limited to vertical sections of conduit, conduit hardware, wire, circuit breakers, disconnect closures, and grounding. The Department will pay for horizontal sections of conduit separately.
5. All cables, connectors, hardware, interfaces, supplies, and any other items necessary for the proper operation and function of any VDS system component to carry video signals to the video detection system processor. All cables shall have manufacturer installed and tested connector ends at the detection side of the cable.

B. Video Detection System Processor (All Types)

Video detection system processors are measured for payment per each actually installed, configured, complete, functional, and accepted. Unless otherwise specified in the Plans, furnish and install a video detection system processor to include, at a minimum, the following:

1. Video detection system processor module
2. Appropriate power supplies, power and communication wiring.

3. Necessary housing and rack assemblies for processors that do not plug directly into signal cabinet input files
4. System software provided within the video detection system processor and configuration software

C. Output Expansion Module

Output expansion modules are measured for payment per each actually installed, complete, functional, and accepted. Unless otherwise specified in the Plans, furnish and install an Output Expansion Module to include, at a minimum, the following:

1. Output expansion module
2. Any cabling and hardware required to connect to the processor module or additional expansion modules to the cabinet and controller input pins

D. Testing

Testing is measured as a lump sum for full delivery of testing and acceptance requirements.

E. Training

Training is measured as a lump sum for all supplies, equipment, materials, handouts, travel, and subsistence necessary to conduct the training.

937.4.02 Microwave Radar Detection

A. Microwave Radar Detector Assembly

Microwave radar detection assemblies are measured for payment per each actually installed, complete, functional, and accepted. Unless otherwise specified in the Plans, furnish and install the following minimum items for a microwave detection assembly:

1. Microwave radar detector (including housing)
2. Field cabling surge protection devices, and cabinet equipment. Field cable shall have manufacturer installed end connector at the detection end
3. Power supply modules
4. Serial communication modules
5. Local communication modules
6. Mounting bracket(s)
7. All weatherheads, vertical conduit risers, and conduit hardware on the support pole for power and detector signal as shown in the plans
8. Configuration and Software

B. Testing

Testing is measured as a lump sum for full delivery of testing and acceptance requirements.

C. Training

Training is measured as a lump sum for all supplies, equipment, materials, handouts, travel, and subsistence necessary to conduct the training.

937.4.03 Wireless In-Pavement Vehicle Detection

A. Sensor (All Types)

Sensors are measured for payment per each actually installed, complete, functional, and accepted. Unless otherwise specified in the Plans, furnish and install the following minimum items for a sensor detection assembly:

1. Sensor
2. Epoxy
3. Core Drilling and Placement
4. Sensor plastic enclosure
5. Configuration and Software

B. Access Point Contact Closure (All Types)

Access Point Contact Closure assemblies are measured for payment per each actually installed, complete, functional, and accepted. Unless otherwise specified in the Plans, the APCC shall include all configuration, software, enclosures, surge protection devices and power supplies, as necessary for a full installation. Provide all modules and cabling with the APCC for connection directly into an Ethernet switch.

C. Wireless Repeater

Repeaters are measured for payment per each actually installed, complete, functional, and accepted. Unless otherwise specified in the Plans, furnish and install the following minimum items for a wireless repeater assembly:

Repeater including housing

1. 7-year battery
2. Mounting hardware
3. Configuration and Software

D. Serial Port Protocol Unit (SPP)

SPP's are measured for payment per each actually installed, complete, functional, and accepted. Unless otherwise specified in the Plans, furnish and install the following minimum items for a SPP assembly:

1. Radio unit including housing
2. Cabling, surge protection devices and connectors from unit to cabinet
3. Mounting hardware
4. Configuration and Software

E. Expansion Contact Closure Card

Expansion Contact Closure Cards (EX) are measured for payment per each actually installed, complete, functional, and accepted. The EX card shall include all configuration to provide a full contact closure detection system.

F. Isolator Module

Isolator Modules are measured for payment per each actually installed, complete, functional, and accepted. Unless otherwise specified in the Plans, furnish and install the isolation module at all locations the Wireless In-Pavement Detection System is called out in the plans. Ensure that the isolation module is installed per the manufacturer

recommendation and is providing protection and amplification of the signal. This shall include all configuration of the unit.

G. Input/Output Module

Input/Output Modules are measured for payment per each actually installed, complete, functional, and accepted. Ensure that the Input/Output module is installed per the manufacturer recommendation and is providing the correct communications options necessary for the installation. This shall include all configuration of the unit.

H. Testing

Testing is measured as a lump sum for full delivery of testing and acceptance requirements.

I. Training

Training is measured as a lump sum for all supplies, equipment, materials, handouts, travel, and subsistence necessary to conduct the training.

937.4.04 Short-Range Radio Device Detection System (All Types)

A. Short-Range Radio Device Detection System (All Types)

Short-Range Radio Device Detectors are measured for payment per each actually installed, complete, functional, and accepted. Each type of system shall be complete, installed and in place and include all units necessary for full operation, as determined by Type. Unless otherwise specified in the Plans, furnish and install the following minimum items for a Short-Range Radio Device Detection assembly:

1. Short-Range Radio Device Detection assembly, including housing and necessary power supplies
2. Power and communications cabling
3. Antenna and mounting hardware
4. Surge Protection Devices
5. Cellular Modem (if applicable)
6. Solar Panel Array (if applicable)
7. Solar Battery charger (if applicable)
8. Batteries (if applicable)
9. NEMA 4X Enclosure (if applicable)
10. Configuration

B. Short-Range Radio Device Detection System Support Data System Software and Database Package

Short-Range Radio Device Detection System software and database packages are measured for payment per each package actually installed, complete, functional, and accepted. Each type of system shall be complete, installed and in place. Unless otherwise specified in the Plans, furnish and install the following minimum items for Short-Range Radio Device Detection System software:

1. Installation of the Software on a Department determined server
2. Installation of the Database software on a Department determined server
3. Configuration of the Short-Range Radio Device Detection System units and initial testing on the software
4. Testing of the XML data and interface to the central system

937.5 Payment

A. General

All Vehicle Detection assemblies, complete in place and accepted by the Department after a successful 30 day burn-in period, are paid for at the Contract Unit Price. Payment is full compensation for furnishing and installing the vehicle detection technology as shown on the plans.

B. Testing

The Department will pay for testing performed as prescribed by this Item, measured as provided under Measurement at the Lump Sum Contract bid price.

C. Training

Training is paid for as a lump sum for all supplies, equipment, materials, handouts, travel, and subsistence necessary to conduct the training, measured as provided under Measurement at the Lump Sum Contract bid price

Payment is full compensation for furnishing and installing the items complete in plans according to this Specification.

Payment will be made under:

Item No. 937	Video Camera Sensor Assembly, Type_	Per Each
Item No. 937	VDS System Processor, Type _	Per Each
Item No. 937	Output Expansion Module, Type _	Per Each
Item No. 937	Testing - Video Detection System	Lump Sum
Item No. 937	Training - Video Detection System	Lump Sum
Item No. 937	Microwave Radar Detection Assembly	Per Each
Item No. 937	Testing - Microwave Detection System	Lump Sum
Item No. 937	Training - Microwave Detection System	Lump Sum
Item No. 937	Wireless Magnetometer Sensor Type _	Per Each
Item No. 937	Access Point Contact Closure Type _	Per Each
Item No. 937	Wireless Repeater	Per Each
Item No. 937	Serial Port Protocol Unit	Per Each
Item No. 937	Expansion Contact Closure Card	Per Each
Item No. 937	Isolator Module	Per Each
Item No. 937	Input/Output Module	Per Each
Item No. 937	Testing – WMVD System	Lump Sum
Item No. 937	Training – WMVD System	Lump Sum
Item No. 937	Short-Range Radio Device Detection System Type _	Per Each
Item No. 937	Short-Range Radio Device Support Data Processing Software Package	Per Each

Item No. 937	Testing – Short-Range Radio Device Detection System	Lump Sum
Item No. 937	Training – Short-Range Radio Device Detection System	Lump Sum

Section 939—Communication and Electronic Equipment

939.1 General Description

This work includes installation, acceptance testing, warranty, and guaranty of items that are either components of several NaviGAtor subsystems or elements of the communication network.

Provide all equipment and materials of like kind and function to be of the exact same manufacture, model, revision, firmware, etc.

Provide all equipment, materials, and work in accordance with all manufacturers' recommendations.

939.1.01 Definitions

Type A Cabinet – The Type A cabinet housing is a standard Model 336 stretch (336S) housing with approximate exterior dimensions of 46 in. (1.2 m) (H) x 24 in. (0.61 m) (W) x 23 in. (0.58 m) (D).

Type B Cabinet - The Type B cabinet housing is a standard Model 337 housing with approximate exterior dimensions of 35 in. (0.89 m) (H) x 20 in. (0.5 m) (W) x 17 in. (0.43 m) (D).

Type C Cabinet - The Type C cabinet housing is a standard Model 332 housing with approximate exterior dimensions of 64 in. (1.6 m) (H) x 24 in. (0.61 m) (W) x 30 in. (0.76 m) (D).

Type D Cabinet – The Type D cabinet housing is a standard Model 336 stretch (336S) housing with approximate exterior dimensions of 46 in. (1.2 m) (H) x 24 in. (0.61 m) (W) x 23 in. (0.58 m) (D). The difference between a Type D and Type A cabinet is the difference in interior cabinet configuration.

Type F Cabinet - The Type F cabinet housing shall be a standard ITS Cabinet Housing #3 with approximate exterior dimensions of 67 in. (1.7 m) (H) x 44 in. (1.2 m) (W) x 26 in. (0.66 m) (D).

GBIC, Type LX: GBIC is a fiber interface module to the network switches and the LX type is for shorter distances on single mode fiber of up to 10 km in length.

GBIC, Type EX: GBIC is a fiber interface module to the network switches and the EX type is for medium distances on single mode fiber of up to 40 km in length.

GBIC, Type ZX: GBIC is a fiber interface module to the network switches and the LX type is for longer distances on single mode fiber of up to 70 km in length.

Field Switch, Type A – is a hardened network field cabinet switch with a minimum of two (2) Gigabit-Ethernet SFP GBIC sockets used in a typical drop and insert over fiber link.

Field Switch, Type B – is a hardened network field cabinet switch with a minimum of three (3) Gigabit-Ethernet SFP GBIC sockets used in a drop and insert over fiber link when two links come together or split.

Field Switch, Type C – is a hardened network field cabinet switch with a minimum of eight (8) Gigabit-Ethernet SFP GBIC sockets used where multiple drop and insert links come together.

Field Switch (POE), Type A – is a hardened network field cabinet switch with a minimum of two (2) Gigabit-Ethernet SFP GBIC sockets used in a typical drop and insert over fiber link and where Power Over Ethernet capability from the switch is needed for POE devices.

Field Switch (POE), Type B – is a hardened network field cabinet switch with a minimum of three (3) Gigabit-Ethernet SFP GBIC sockets used in a drop and insert over fiber link when two links come together or split and where Power Over Ethernet capability from the switch is needed for POE devices.

Field Switch (POE), Type C – is a hardened network field cabinet switch with a minimum of eight (8) Gigabit-Ethernet SFP GBIC sockets used where multiple drop and insert links come together and where Power Over Ethernet capability from the switch is needed for POE devices.

939.1.02 Related References

A. Georgia Standard Specifications

Section 631 – Permanent Changeable Message Sign

Section 682 – Electrical Wire, Cable and Conduit

Section 797 – Buildings

Section 922 – Electrical Wire and Cable

Section 923 – Electrical Conduit

Section 925 – Traffic Signal Equipment

Section 935 – Fiber Optic System

Section 936 – Closed Circuit Television System (CCTV)

Section 937 – Detection Systems

Section 940 – NaviGAtor Advanced Transportation Management System Integration

B. Referenced Documents

American Society of Testing and Materials (ASTM)

American National Standards Institute (ANSI)

Caltrans TEES – Caltrans Transportation Electrical Equipment Specifications, as published by the State of California Business, Transportation & Housing Agency; Department of Transportation, Current Edition, and all current addenda.

Caltrans TSCES – Caltrans Traffic Signal Control Equipment Specifications, as published by the State of California Business, Transportation & Housing Agency; Department of Transportation, Current Edition, and all current addenda

Canadian Standards Association (CSA)

Deutsches Institut für Normung {German Institute for Standardization} (DIN)

Electronics Industry Association (EIA)

Standards of the European Committee for Standardization (EN)

ICEA Table K.2/Method 1

Institute of Electrical and Electronics Engineers (IEEE)

International Electrotechnical Commission (IEC)

International Standards Organization (ISO)

International Telecommunications Union (ITU)

Motion Pictures Expert Group (MPEG)

National Electric Code (NEC)

National Electric Safety Code (NESC)

National Electrical Manufacturers Association (NEMA)

National Television System Committee (NTSC)

National Transportation Communications for ITS Protocol (NTCIP)

Telecommunications Industry Association (TIA)

Underwriter's Laboratory Incorporated (UL)

Association for Electrical, Electronic & Information Technologies [Germany] (VDE)

939.1.03 Submittals

Use only equipment and components that meet the requirements of these minimum specifications and that are approved on the Department's Qualified Products List. Products appearing on the Qualified Products List (QPL) are exempt from normal submittal requirements. These products have been evaluated by the Office of Traffic Operations and have proven their capability of meeting the applicable Georgia Department of Transportation Specification. Any of these products may be used without submitting catalogue cuts, sampling or pre-testing. The Contractor shall submit a letter to the Engineer, stating which QPL items they will use. The Engineer and/or department designee must ascertain that the construction item is the same material identified on the QPL and will acknowledge receipt of these items in the project diary or as required by the Construction manual.

The following chart provides the Contractor with an outline of the submittal requirements for the equipment and components not on the Qualified Products Lists for this pay item. This chart is to be used as a guide and does not relieve the Contractor from submitting additional information to form a complete submittal package.

Section 939 Submittal Requirements								
Item	Specification Subsection	Catalog Cuts	Factory Specifications	Independent Test Lab Certification	Installation Procedure	Test Plans	Maintenance Procedures	Submittal Due Date (Cal. Days after NTP)
Serial Data Terminal Server (All Types)	939.2.02				X	X	X	60 Days
Patch Cords	939.2.03							60 Days
Hub UPS	939.2.04				X	X	X	60 Days
Network Switch, Layer 3 Gig-E (All Types)	939.2.05				X	X	X	60 Days
GBIC Routing Switch Module (All Types)	939.2.06				X	X	X	60 Days
GBICs (All Types)	939.2.07				X	X	X	60 Days
Field Switch (All Types)	939.2.08				X	X	X	60 Days
Equipment Rack	939.2.11				X			60 Days
Equipment Cabinet Assembly (All Types)	939.2.13.A				X	X	X	60 Days
Training Plan	939.3.08				X		X	60 Days

Submit submittal data for all equipment, materials, test procedures, and routine maintenance procedures required for these items within sixty (60) calendar days after the Notice To Proceed and prior to any installation, unless noted otherwise in the Contract Documents.

Submit to the Engineer for approval, two (2) copies of the manufacturer's descriptive literature (catalog cuts), technical data, operational documentation, service and maintenance documentation and all other materials required within these specifications. An electronic copy, which includes all the aforementioned documents, shall be placed on a CD as pdf documents and delivered to the Engineer.

Provide submittal data that is neat, legible, and orderly. Neatly organize each package of submittal data and separate by hardware item. Use the "Materials Certification Package Index and Transmittal Form", contained in Section 105.02 of the Specifications, for each pay item to document and list all material and components that are included in the submittal package. Any submittal data submitted without the Index/Transmittal form or that is incomplete will be rejected.

A. Equipment

Materials submittal data for items specified herein shall include, but not be limited, equipment performance and technical specifications, electrical/power specifications, size/weight/mounting configuration requirements, and environmental operating conditions.

Provide a diagram showing the location of all equipment within the TCC, Hub and/or Equipment Cabinet, 30 days prior to any installation activities at the site. Include in this diagram the dimensions, power requirements, power service materials and heat dissipation specifications for all of the equipment.

Submit and provide all equipment and corresponding ancillary and incidental materials of a like kind to be the exact same manufacturer, model, revision, firmware, etc. for the entire quantity in the project. Like kind equipment shall include, but is not limited to, serial data terminal servers, uninterruptible power supplies, network switches, GBIC routing switch modules, GBICs, field switches, video encoders and decoders, and equipment racks.

B. Testing

Provide test equipment and system set-up and diagnostic software required for the testing, operation, maintenance and troubleshooting of the equipment, along with Operations, Installation and Maintenance manuals for these software packages. Submit all testing plans and procedures for Department approval in accordance with the chart above.

939.2 Materials

939.2.01

Not Applicable

939.2.02 Serial Data Terminal Server

Provide multiport Serial Data Terminal Servers (terminal servers) that are compatible with the existing NaviGAtor serial port control system. The existing serial port control system consists of serial data terminal servers (Digiboard PortServer II) addressed with the Digiboard RealPort system interface.

A. Ensure all terminal servers meet the following requirements:

1. Compatible with the existing NaviGAtor serial port control system
2. IP addressable supporting Ethernet 10/100Base-T/TX with RJ45 port
3. RS-232 serial ports with RJ45 ports
4. Management access by HTTP, telnet, and console ports, all password protected
5. SNMP read/write management of terminal server and individual serial ports
6. Each serial port individually configurable comm. settings and TCP/UDP socket support
7. RS-232/422/485 selectable serial connections
8. Each serial port with minimum 230Kbs throughput with 64Kbps buffering and data capture
9. Firmware upgradeable by FTP/TFTP
10. Upload/download of configuration settings
11. Diagnostic LEDs for Ethernet connection and unit status
12. UL approval

B. Ensure Serial Data Terminal Server, 16 Port, meet the following additional requirements:

1. EIA 19-inch rack-mounted units with maximum vertical height of 1.75 inch (44.4 mm).

2. 16 RS-232 ports mounted on the front of the unit.
3. Internal 120VAC power supply.

C. Ensure Serial Data Terminal Server, Type B, meet the following additional requirements:

1. Operating temperature of unit and power supply of -31ºF to 165ºF (-35ºC to 74ºC).
2. Conformal-coated circuit boards.
3. Capable of being panel-mounted, rack-mounted and shelf-mounted in equipment cabinets.
4. Minimum of two (2) RS-232 ports mounted on the front of the unit.
5. Internal or external 120VAC power supply.

939.2.03 Patch Cords

A. General Requirements

Provide all necessary patch cords with all electronic equipment for interconnection. Verify that patch cords consist of a length of cable that is connectorized on both ends, primarily used for interconnecting termination or patching facilities and/or equipment.

1. All patch cords shall be factory assembled and connectorized and be certified by the patch cord manufacturer to meet the relevant performance standards required below. All connectors shall incorporate mechanical cable strain relief and protective boots.
2. Coaxial Video Patch Cords: Ensure that coaxial video patch cords are 75-ohm precision double-shielded cables with tinned copper braid shield and minimum #22AWG solid copper stranded center conductor. Use BNC connectors with gold-plated center pins at both ends. Connectorized coaxial video patch cords shall be 100% sweep tested. Provide only adapters with gold-plated pins.
3. Network/Field Switch/Data Patch Cords: Verify that network//field/data patch cords meet all ANSI/EIA/TIA requirements for Category-5e 4-pair unshielded twisted pair cabling with stranded conductors and RJ45 connectors.
4. Voice/Telephone Patch Cords: Provide voice/telephone patch cords that meet all ANSI/EIA/TIA requirements for Category 3 unshielded twisted pair cabling with stranded conductors, unless otherwise required by the voice/telephone equipment manufacturer.
5. Fiber Optic Patch Cords: Provide fiber optic patch cords that meet all requirements of Section 935.

939.2.04 Hub Uninterruptible Power Supply

Ensure the Hub UPS provides AC back-up power for network electronics and other equipment as shown in the contract documents.

A. Provide a Hub UPS meeting the following requirements:

1. 19” rack mounted, maximum height of six (6) rack units (10.5”).
2. 120 VAC single phase 60 HZ output
3. Input line cord plug type NEMA L5-30P
4. 8 output receptacles type NEMA5-15R
5. Pure sine wave output at 115 VAC +/- 5%
6. Transfer time of 4 ms or less

7. Capacity of 2200 VA/1900 W
8. Load factor range of 0.5 to 1.0
9. Peak current capability of 6.5 KVA
10. Software adjustable high and low voltage buck/boost function
11. SNMP manageable hardware and software with 10Base-T connection (RJ-45)
12. Addressable SNMP command set shall minimally include: UPS state, battery condition (capacity, age, internal temperature); current AC input conditions (voltage, phase, frequency, failure condition); current AC output conditions (voltage, frequency, load); and diagnostic/self-test control and status.
13. Remote environmental sensing hardware and software integrated with SNMP minimally capable of temperature and humidity monitoring and 4 dry contact closures
14. Network connection to Ethernet port on Hub Network Switch, Layer 3 GigE
15. Printed and electronic user documentation for all management, configuration and operation hardware and firmware settings, installation procedures, and the MIB.
16. Sealed maintenance-free lead-acid batteries
17. Maximum audible noise of <53 dBA at 3 ft (0.9 m).
18. Upgradeable for increased runtime capacity (minimum 2.5X) with additional battery packs
19. Expansion battery pack that is 19” rack mounted, with maximum height of five (5) rack units (8.75”).

939.2.05 Network Switch, Layer 3 GigE

Furnish a Gigabit Ethernet Layer 3 network routing switch that is compatible with the existing GDOT Ethernet switching network. The existing network consists of Cisco Networks 3750 Layer 3 routing switches. The network switches shall be managed by the department’s existing network management software. Furnish and configure the network switches as complete compatible assemblies. Switches shall be modular, stackable and the modules configurable to be operated as a single switch. Configure the network switch (es) at the locations shown in the Plans, as applicable, to the following minimum requirements:

- Minimum 12 port 1000 Base SFP GBIC Routing Switch .
- One (1) 24-port auto-sensing 10/100/1000 Base-T/TX Ethernet Layer 3 switching interface.
- Three (3) 100-240VAC power supplies including North American power cables, configured for 120VAC service
- EIA 19” rack mounted
- All modules shall be hot-swappable.
- Meet the IEEE 802.3u (Fast Ethernet 100 Mbps) standard.
- Meet the IEEE 802.3x (Full Duplex with Flow Control) standard.
- Meet the IEEE 802.1p (Priority Queuing) standard.
- Meet the IEEE 802.1q (VLAN) standard per port for up to 255 VLAN’s.
- Meet the IEEE 802.1w (Rapid Spanning Tree Protocol) standard.
- Meet the IEEE 802.1d (Virtual Bridge) standard.
- Meet the IEEE 802.1x (authentication) standard.
- Meet the IEEE 802.3ad (Port Trunking) standard for a minimum of two groups of four ports.
- Full implementation of RIP protocol
- Full implementation of OSPF protocol
- Capable of mirroring any port to any other port within the switch.

- Full implementation of SNMPv1, SNMPv2c, and SNMPv3.
- Full implementation of GMRP (Generic Multicast Registration Protocol).
- Full implementation of GVRP (Generic VLAN Registration Protocol).
- Full implementation of IGMP, IGMPv2 and IGMP snooping.
- Full implementation of PIM-SM and PIM-DM.
- Full implementation of DVMRPv3.
- Full implementation of VRRP.

Additionally configure each Network Switch, Layer 3 GigE, Type E, with four (4) Type E GBICs. Include four (4) duplex fiber optic single-mode patch cords, 30 ft. (9 m) in length, in accordance with Section 935 and with LC - connectors on one end (at the FDC) and an LC-connector on the other end (at the network switch.)

Additionally configure each Network Switch, Layer 3 GigE, Type F, with four (4) Type E GBICs and four (4) Type F GBICs. Include eight (8) duplex fiber optic single-mode patch cords, 30 ft. (9 m) in length, in accordance with Section 935 and with LC-connectors on one end (at the FDC) and an LC-connector on the other end (at the network switch.)

939.2.06 GBIC Routing Switch Module

Provide a GBIC Routing Switch Module, Type B, which consists of 30-1000Base SFP GBIC ports populated with GBICs as called-out on the Plans and as specified herein. All Modules and GBICs provided shall be compatible with the Network Switch, Layer 3 GigE.

939.2.07 GBIC (Gigabit interface converter)

A. The GBICs shall meet the following minimum requirements:

1. Support single-mode operation
2. Fully compliant with IEEE 802.3z standards
3. Small Form Factor Plug-in module that Operates at 1000Mbps and full-duplex two fiber operation supporting the following types:
4. GBIC, Type LX
5. GBIC, Type EX
6. GBIC, Type ZX
7. Allow for hot swapping failed components.
8. Operate as its own switched port.
9. Support detecting and shutting down one-way link failures, using auto-negotiation.
10. The GBIC optical receiver saturation level shall be greater or equal to the maximum optical output of the mating transmitter minus 5db. Where required for manufacturer’s recommended operations, provide fiber optic patch cords in accordance with Section 935 with integral optical attenuators for optical power control in accordance with the Ethernet switch (network switch, field switch, etc.) manufacturer’s recommendations.
11. GBICs, all types, furnished with field switches shall meet the same environmental operating requirements as the field switch.

939.2.08 Field Switch

A. All Field Switches shall meet the following requirements:

General Characteristics and Capabilities:

1. Meet the IEEE 802.3 (10Mbps Ethernet) standard
2. Meet the IEEE 802.3u (Fast Ethernet 100 Mbps) standard
3. Provide Gigabit-Ethernet SFP GBIC sockets as specified in Field Switch Types subsection
4. Provide a minimum of six (6) 10/100 Base-T/TX ports unless otherwise specified in the Field Switch Types subsection. Each 10/100Base-T/TX port shall connect via RJ45 connector. The ports shall operate as half-duplex or full-duplex (IEEE 802.3x) over 100m segment lengths and provide auto-negotiation
5. Bit Error Ratio (number of erroneous bits divided by the total number of bits transmitted, received, or processed) shall not increase over the optical channel when two units are connected with a fiber optic jumper having total optical losses of 6dB, including connector losses
6. Operate with non-blocking store and forward switching at full wire speed
7. Minimum MTBF of 100,000 hrs using Bellcore TS-332 standard

B. Network Capabilities and Features

The Field Switch shall support/comply with the following minimum requirements:

1. Provide full implementation of IGMPv2 and IGMP snooping
2. Meet the IEEE 802.3x (Full Duplex with Flow Control) standard
3. Meet the IEEE 802.1p (Priority Queuing) standard
4. Meet the IEEE 802.1Q (VLAN) standard per port for up to four VLAN's
5. The switch shall meet the IEEE 802.1D (Spanning Tree Protocol) and IEEE 802.1w (Rapid Spanning Tree) standards
6. Meet the IEEE 802.3ad (Link Aggregation) standard for a minimum of two groups of four ports
7. Full implementation of GVRP (Generic VLAN Registration Protocol)

C. Port Security

The Field Switch shall support/comply with the following (remotely) minimum requirements:

1. Ability to configure static MAC addresses access
2. Ability to disable automatic address learning per ports; known hereafter as Secure Port. Secure Ports only forward statically configured Mac addresses
3. Trap and alarm upon any unauthorized MAC address and shutdown. Port shutdown requires administrator to manually reset the port before communications are allowed

D. Network Management Functions

The Field Switch shall support/comply with the following minimum requirements:

1. Password manageable
2. Full implementation of SNMPv1 and SNMPv2c.
3. Full implementation of RMON I statistics, history, alarms, and events objects.
4. Capable of mirroring any port to any other port within the switch.

E. Remote Management and Configuration

The Field Switch shall support/comply with the following minimum requirements:

1. SNMP
2. Telnet/CLI
3. HTTP (Embedded Web Server) with Secure Sockets Layer (SSL).
4. Full implementation of RFC 783 (TFTP) to allow remote firmware upgrades.

F. Mounting

All necessary hardware and adaptors for mounting shall be included. Provide a perforated shelf and secure with rack mounting hardware for a Field Switch that is not rack mountable with integral “rack ears.”

Provide a sufficient quantity of fiber optic patch cords to match the populated optical ports on the Field Switch. Include duplex fiber optic single-mode patch cords, 3 ft. (1 m) in length, in accordance with Section 935 and with ST-connectors on one end (at the FDC) and an LC-connector on the other end (at the Field Switch.)

G. Environmental

The Field Switch shall support/comply with the following minimum requirements:

1. Operate between -34 to +74 degree Celsius. (-29ºF to +165ºF). No fans are permitted.
2. Operate from 10% to 90% humidity

H. Electrical/Safety

The Field Switch shall support/comply with the following:

1. Operate from 100 VAC to 200 VAC (120VAC nominal, 60Hz) as shown on the Detail Drawings in this section.

The Field Switch shall be provided with all power conversion which is temperature hardened from -29º F to +165º F (-34 to +74 degrees Celsius) and all regulation necessary to support electronics operation. The power input circuitry shall be designed to protect the electronics from damage by a power surge or under voltage condition.

All power transformers provided shall be “fastening mechanism” type. No plug-in types will be provided. All corded transformers shall be mountable with the ability to neatly secure power cords.

Include UL approval

Provide rubber dust caps/covers with insertion/removal handles that completely seal the port opening for all unused copper and optical ports.

I. Status Indicators

The Field Switch shall support/comply with the following minimum requirements:

1. Power: On, Off
2. Network Status per port: Transmit, Receive, Link, Speed
3. Status indicators shall be LED.

J. Field Switch Types

In addition to meeting all the requirements specified herein, the Field Switch SFP GBIC sockets shall be populated as indicated on the Plans and shall be of GBIC Type compatible with the devices it shall interface to as also indicated on the Plans. The Field Switch types are defined as follows:

1. Field Switch, Type A – provide a minimum of two (2) Gigabit-Ethernet SFP GBIC sockets.
2. Field Switch, Type B – provide a minimum of three (3) Gigabit-Ethernet SFP GBIC sockets.
3. Field Switch, Type C – provide a minimum of eight (8) Gigabit-Ethernet SFP GBIC sockets

939.2.09 Field Switch (POE)

Field Switch (POE) is a Power Over Ethernet capable Field Switch that is to be used where POE field devices are installed and shall meet all the requirements of Field Switch as indicated in section 939.2.08 except as indicated by the following requirements:

- Each 10/100Base-T/TX port shall be capable of providing Power Over Ethernet (POE) with each port 802.3af / 802.3at compliant.
- Each port shall be Auto-sensing that provide power only to PoE end devices or shall be able to turn POE capability on or off on a per port basis.

A. Field Switch (POE) Types

In addition to meeting all the requirements specified herein, the Field Switch (POE) SFP GBIC sockets shall be populated as indicated on the Plans. The Field Switch types are defined as follows:

1. Field Switch (POE), Type A – provide a minimum of two (2) Gigabit-Ethernet SFP GBIC sockets.
2. Field Switch (POE), Type B – provide a minimum of three (3) Gigabit-Ethernet SFP GBIC sockets.
3. Field Switch (POE), Type C – provide a minimum of eight (8) Gigabit-Ethernet SFP GBIC sockets

939.2.10 Equipment Rack

Provide equipment racks as applicable and required within the equipment cabinets as specified herein.

939.2.11 Equipment Cabinet Assembly

Provide Equipment Cabinet Assemblies as show on the plans and as specified herein.

Ensure that all cabinets exhibit a smooth, uniform natural aluminum finish.

All bolts, nuts, washers, screws, hinges and hinge pins shall be stainless steel.

Manufacture the exterior mounting bracket and fixtures of aluminum or galvanized steel, and manufacture all fastening and mounting hardware of stainless steel. Verify that the bottom of the pole-mounted cabinet is fully enclosed. Where base-mounting of equipment cabinets is specified, the cabinet bottom shall be open.

Verify that all electrical cables between the cabinet and the device are UL-listed tray cable with #18 AWG 16-strand copper conductors with PVC/nylon insulation and a UV-resistant PVC outer jacket rated for 600V, 190 F (90 C) dry, 170 F (75 C) wet and wet/dry direct burial use. Conductor color-coding shall be in accordance with ICEA Table K.2/Method 1.

A. General

1. Standard Cabinet Housing

a. General Requirements: Unless otherwise specified, furnish cabinet housings that conform to the Cabinet Housing Details as defined in Chapter 6, Sections 2, 3 and 5 and the Cabinet Housing Details of the Caltrans Traffic Signal Control Equipment Specification, latest version (TSCES). The police panel and associated wiring circuits are not required as part of this cabinet assembly. All cabinets shall have hooks, welded to the inside of the front cabinet door, for hanging the plastic documentation pouch.

b. Unless otherwise specified in these Specifications or in the Plans, configure all equipment cabinet assemblies for pole mounting. The holes for pole mounting shall be properly reinforced with metal plates of adequate size and strength welded longitudinally across the inside depth of the cabinet. Where base-mounting of equipment cabinets is specified,

make the cabinet bottom open and provide an approved base mounting adapter, in accordance with the Department's Standard Specification for Traffic Signal Equipment.

2. Type A Standard Cabinet Housing – Not Applicable

3. Type B Standard Cabinet Housing – Not Applicable

4. Type C Standard Cabinet Housing:

   a. The Type C cabinet housing is a standard Model 332 housing with approximate exterior dimensions of 64 in. (1.6 m) (H) x 24 in. (0.61 m) (W) x 30 in. (0.76 m) (D).

   b. Equip all Type C cabinet housings with the standard EIA 19-inch rack cabinet cage as described in Section 3 of the Caltrans specification. Install side panels within the two sides of the cabinet cage. Each side panel shall be fabricated from 5052 sheet aluminum alloy with a minimum thickness of 0.125 in (3.175 mm).

   c. Equip Type C cabinet housings with a cabinet sliding drawer. Follow the drawer specifications given in Subsection 939.2.11.B.l

   d. Provide a ground fault interrupt 15A duplex receptacle (NEMA 5-15R) in the cabinet as an accessory outlet. Install two (2) non-ground fault protected 15A equipment outlet strips, each with ten (10) receptacles. Mount the strip outlets vertically near the top of the cabinet.

5. Type D Standard Cabinet Housing:

   a. The Type D cabinet housing shall be a standard Model 336 stretch (336S) housing with approximate exterior dimensions of 46 in. (1.2 m) (H) x 24 in. (0.61 m) (W) x 23 in. (0.58 m) (D). The minimum door opening dimensions shall be 40.5 in. (1.03 m) (H) x 22 in. (0.56 m) (W).

   b. Equip all Type D cabinet housings with the standard EIA 19-inch rack cabinet cage as described in Section 3 of the Caltrans specifications. The minimum clear vertical inside dimension of the rack for equipment mounting shall be 39.5 in. (1.00 m). Install side panels within the two sides of the cabinet cage. Use side panels fabricated from 5052 sheet aluminum alloy with a minimum thickness of 0.125 in (3.175 mm).

   c. Equip the Type D cabinet housing with a cabinet-sliding drawer. Follow the drawer specifications given in Subsection 939.2.11.B.l.

   d. Provide a ground fault interrupt 15A duplex receptacle (NEMA 5-15R) in the cabinet as an accessory outlet. Provide rack mounted power strip outlets near the top of the cabinet. The power strip shall incorporate eight (8) NEMA 5-15R receptacles. The power strip receptacle shall face the back of the cabinet and shall be recessed within the cabinet rack to provide a minimum spacing of three (3) inches between the outlet's face and the cabinet door when the door is closed.

6. Type F Standard Cabinet Housing:

   a. The Type F cabinet housing shall be a standard ITS Cabinet Housing #3 with approximate exterior dimensions of 67 in. (1.7 m) (H) x 44 in. (1.2 m) (W) x 26 in. (0.66 m) (D) as specified in the Caltrans Transportation Electrical Equipment Specifications, latest version and all addenda (TEES). The minimum door opening dimensions shall be 56 in. (1.4 m) (H) x 20 in. (0.51 m) (W).

   b. Equip all Type F cabinet housings with two standard EIA 19-inch rack cabinet cages as described in the Caltrans TEES. Equip all Type F cabinet housing with four (4) side mounting panels in the rack cabinet cages; side mounting panels shall mount from inside the rack cabinet cage only. The minimum clear vertical inside dimension of the rack for equipment mounting shall be 54.5 in. (1.4 m). Use side panels fabricated from 5052 sheet aluminum alloy with a minimum thickness of 0.125 in (3.175 mm) with minimum dimensions of 50 in (1.3 m) (H) x 21 in. (0.53 m) (W).

c. Provide a minimum of four (4) wiring pass-through holes on the inside mounting panels to permit patch cords to pass between the two cabinet sides. Each pass-through hole shall be 5 in. (127 mm) in diameter and shall be fully grommetted for patch cord protection, with the holes positioned with two (2) in the cabinet front and two (2) in the cabinet rear and aligning horizontally between the two side panels.

d. Provide a minimum of 16 plastic- or rubber-coated J-hooks or D-rings, minimum 1 in. (25 mm) depth and height, on the inside rails of the rack cabinet cages, to organize patch cords passing between the two cabinet sides. Install the J-hooks in horizontally-aligned pairs on the inside rails, with four (4) pairs in the cabinet front and four (4) pairs in the cabinet rear.

e. Equip the Type F cabinet housing with two cabinet-sliding drawers. Follow the drawer specifications given in Subsection 939.2.11.B.l.

f. Provide a ground fault interrupt 15A duplex receptacle (NEMA 5-15R) in the cabinet as an accessory outlet. Provide rack mounted power strip outlets near the top of the cabinet. The power strip shall incorporate eight (8) NEMA 5-15R receptacles. The power strip receptacle shall face the back of the cabinet and shall be recessed within the cabinet rack to provide a minimum spacing of 3 in. (76 mm) between the outlet's face and the cabinet door when the door is closed.

B. Internal Cabinet Assembly Components

1. Unless otherwise specified in the Plans or approved by the Engineer, construct all cabinet assemblies in conformance with this Subsection 939.2.11.B, all applicable provisions of the Georgia DOT Standard Specifications for Traffic Signal Equipment, and applicable provisions of the Caltrans TSCES or TEES. Do not include with the cabinet assembly the power supply assembly, power distribution assembly, input file, output file, monitor unit assembly, field terminal hookup blocks, modular/serial/control bus, AC/DC power assembly and extension, and related wiring assemblies as described in the Caltrans TSCES or TEES.

2. Provide a plastic documentation pouch to store the cabinet and equipment documentation. Use a pouch that is side-opening, re-sealable, opaque, and of a heavy-duty plastic material. Use a pouch that has metal or hard-plastic reinforced holes for hanging from hooks included on the cabinet door. The pouch shall be of the size and strength to easily hold all wiring diagrams, equipment documentation and the maintenance logbook

3. Wiring, Conductors and Terminal Blocks

   All 120VAC service entrance, power distribution, grounding and protection shall be provided by components mounted on 35mm DIN standard rails. Devices include, terminal blocks, circuit breakers and surge protection devices. All DIN rail mounted components will be certified to meet or exceed UL-94, UL-467, UL-489, UL-1449, IEC-947-7-1, IEC-60947-2, CSA-22.2 or as specified in the Details or special provisions.

   DIN rail mounted power distribution devices supplied shall be configured as shown in the Details and shall meet or exceed the specifications and certifications listed below.

   a. Mounting Rail

      Use DIN rail with pre-punched holes for mounting and certified to meet EN 50022, EN 60715 and DIN 46277-3. DIN mounting rail shall be 35mm wide, 7.5 mm high, 1 mm thick, perforated for flexible mounting and cut to length. Rail will cut between mounting holes to allow mounting at both ends of the rail section. Rail shall be provided burr free with no sharp edges or deformation from the standard profile. The portion of the rail at the mounting bolt holes shall be cleaned of any coating to expose the underlying steel. The area under the bolt hole and the aluminum power panel mounting point shall be covered with an anti corrosion paste to provide a solid and long lasting electrical connection between the DIN Rail and the power panel. DIN Rail shall be attached to the power panel by nut and bolt with star washers to provide a low resistance electrical connection between the rail and the power panel.

   b. Terminal Blocks

Use DIN terminal blocks with voltage and current ratings greater than the voltage and current ratings of the wires that are terminated on the blocks Metallic terminal block connection hardware and components shall be non-ferrous copper or nickel/tin-plated copper alloy or equivalent. All terminal blocks and wire shall be supplied in the colors listed below.

Black – Line
White – Neutral
Green or Green/Yellow – Ground

c. Service Entrance Terminal Blocks

Make the terminal block for the 120VAC cabinet service entrance (SE) a 10 mm single level screw type device. The terminal block shall accommodate #20 - 6 AWG wiring and shall be provided in colors as specified herein. The Ground terminal shall be the same size and pitch as the power terminals and shall provide positive electrical and mechanical connection to the mounting rail. Ground terminals may be provided in the color green or the international green and yellow style. Provide the quantity of terminals as shown in the Details.

d. Distribution Terminal Blocks

Terminal blocks for distribution of 120 VAC (TB2) and ground located on the protected side of the power distribution assembly shall be a 6 mm single level screw type device. The terminal block shall accommodate #24-8 AWG wiring and shall be provided in colors as specified herein. The Ground terminal shall be the same size and pitch as the power terminals and shall provide positive electrical and mechanical connection to the mounting rail. Ground terminals may be provided in the color green or the international green and yellow style. Provide the quantity of terminals as shown in the Details.

e. Cross Connection Bridge

Cross connection bridge strips shall be provided to connect a number of terminal blocks to create the specified power distribution design. The bridge strips shall match the pitch and construction of the terminals to be connected and shall be certified by the terminal block manufacturer to be compatible with the connected terminal blocks. Cross connection bridge strips shall be fully insulated to prevent operator contact. Connected terminal blocks of any number shall be connected by a single cross connection bridge strip.

f. Circuit Breaker

Provide circuit breakers as shown in the Detail Drawings in this section. Use only circuit breakers that are UL-489 and CSA 22.2 approved and plainly marked with trip, frame sizes and ampere rating. All circuit breakers shall be quick-make, quick-break on either automatic or manual operation. Ensure that contacts are silver alloy and enclosed in an arc-quenching chamber. Overload tripping shall not be influenced by an ambient air temperature range from -18 degrees C to 50 degrees C. Minimum interrupting capacity shall be 5,000 amperes RMS. Use only circuit breakers that are 35 mm DIN rail mounted.

g. End Brackets

Provide screw-clamped end brackets to positively lock all DIN rail mounted devices to the rail.

h. Spacer

Spacers or dividers shall be placed between terminal blocks and other components as shown in the Details for visual separation. Spacers shall snap on to DIN rail be approximately 5-18 mm thick and match the size of the terminals they separate.

i. Safety Cover

A safety covers shall be provided on terminal blocks to prevent contact with exposed conductors or any metallic components. This cover will provide electrical and visual separation between terminal blocks and other rail mounted devices. Covers shall be approximately 2mm thick and sized to match the terminal blocks they protect or separate.

j. Surge Suppressor

Provide a DIN rail mounted TVSS (Transient Voltage Surge Suppressor) with RFI/EMI filtering for AC power service to the cabinet housing. The TVSS shall provide protection from all conductors to ground and meet or exceed the following requirements and levels of protection.

Nominal operating Voltage 120 V

Max. Continuous Operating Voltage 150V

Max. Surge Current Rating 20 kA

Nominal Surge Current Rating for 8x20µs surge 20 kA
Internal Thermal Fuses
Failure/ replacement indication
Operating Temperature: -40C to 80C
Meet UL1449 2nd Ed.,
VDE0675-6, CSA-22.2, and CE marked

k. Wiring

Use a minimum #12 AWG grounding of each surge suppression device, or larger if recommended by the surge suppression device manufacturer or indicated in the Details. Use insulated green wire and connect the ground wire directly to the ground terminals. Do not “daisy chain” with the grounding wires of other devices including other surge suppressors. Terminate all ground wiring between cabinet surge suppressor devices on the DIN rail mounted ground terminal blocks. Dress and route grounding wires separately from all other cabinet wiring. Install grounding wires with the absolute minimum length possible between the suppressor and the ground terminals. Label all surge suppressors with silk-screened lettering on the mounting panel. Use minimum #12 AWG insulated THHN-THWN conductors between the surge suppression device and the power distribution terminal.

l. Sliding Drawer

Install drawer that is an aluminum storage compartment mounted in the rack assembly with the approximate following dimensions: 1.75 in (44.4 mm) (H) x 16 in (410 mm) (W) x 14 in (360 mm) (D). Ensure the compartment has telescoping drawer guides to allow full extension from the rack assembly. When extended, the storage compartment shall open to provide storage space for cabinet documentation and other miscellaneous items. Install a storage compartment that is of adequate construction to support a weight of 25 lb (11 kg) when extended. The top of the storage compartment shall have a non-slip plastic laminate attached which covers a minimum of 90% of the surface area of the top.

939.2.020 Delivery, Storage and Handling

Not applicable

939.3 Construction Requirements

939.3.01 Personnel

Have trained personnel available for troubleshooting and problem solving until all equipment is fully functional and ready to start the acceptance phase.

939.3.02 Equipment

Not applicable

939.3.03 Preparation

A. Network Equipment Programming

Perform network equipment programming and testing in accordance with the Network Equipment Programming Procedure below and as directed by the Engineer. Network equipment is defined as any traffic control and monitoring equipment with an Ethernet interface and includes equipment from these and the following GDOT Specifications and Special Provisions:

1. Section 631—Changeable Message Signs
2. Section 925—Traffic Signal Equipment
3. Section 936 – CCTV System
4. Section 937—Detection System
5. Section 938—Detection
6. Section 940—NaviGAtor System Integration

The Contractor is responsible for all steps, work and activities in the procedure below except when Department responsibility is expressly indicated. At all times, the Contractor is responsible for all equipment and materials, including while being programmed by the Department, and including operation, warranties, and technical support.

Coordinate all aspects of the procedure through the Engineer.

Perform all network equipment programming for a complete project at one time. The Contractor may request in writing for a staged equipment programming; provide a plan with schedule for the complete project that details all of the proposed stages and identifies all network equipment and field sites for each stage. If approved by the Department, the procedure below applies independently and fully to each individual stage. Field sites will always be programmed concurrently for all of the equipment at that site.

Materials submittal reviews for all network equipment, and related equipment, shall be successfully completed prior to beginning the Network Equipment Programming Procedure.

Step 1
Request in writing for GDOT to prepare and provide the basic equipment programming data. The request shall clearly identify the project. If the Contractor desires a staged equipment programming, that request must be identified at this time and the staging plan must be submitted.

Step 2
Once the Contractor's request is complete, the Department will provide the basic equipment programming data within 45 days from the Department's acceptance of the Contractor's request. Basic equipment programming data will include the IP address, subnet, and gateway for each network device. The programming data will be provided in spreadsheet form.

Step 3
Complete installation of all field equipment, including but not limited to support poles, equipment cabinets, power service, field and network devices, and fiber communications infrastructure. Complete all basic equipment programming. Furnish Network Switch GBICs to GDOT. Furnish all fiber patch cords in the hub(s) but make no connections to the Network Switch. Provide in spreadsheet form the equipment model numbers, serial numbers, MAC addresses, and firmware revision numbers for each network equipment device in its installed location. Complete all field testing required prior to the Interim Field Subnet (IFS) test, and conduct an IFS test dry-run.

Step 4
Request in writing to begin the IFS test a minimum of 30 days in advance of the desired start date. Conduct IFS test in the presence of the Engineer. If the IFS test fails, identify the defects and make corrections, provide a written report on the diagnosis and corrections made, and request in writing an IFS retest a minimum of 14 days in advance of the desired start date.

Step 5
Upon successful and accepted completion of IFS testing, the Department will have 45 days to complete all network and system programming and NaviGAtor integration of the field devices and hub equipment. Continue with all remaining field construction that has no impact on any equipment or communications infrastructure associated with the network programming. Any disruption of the equipment or communications infrastructure shall result in stopping the 45 day period for Department programming.

Step 6

The Department will notify the Contractor when network programming is successfully completed, at which time the Network Equipment Programming Procedure will be considered completed. Continue with all remaining project activities, including remaining acceptance testing.

939.3.04 Fabrication

Not applicable

939.3.05 Construction

A. Equipment

1. Installation

   Install all equipment in new and/or existing equipment racks and equipment frames in accordance with the equipment manufacturer's recommendations, including mounting, interconnection wiring, and electrical service. Furnish and install all mounting hardware and incidental materials, including fasteners and auxiliary supporting frames/brackets, as recommended by the manufacturer. Furnish and install all miscellaneous hardware, materials, wiring/cabling, configuration, and any other incidental items necessary for fully operational components and subsystems shown in the Contract Documents and Section 940 of the Standard Specifications, except when specifically identified as existing or as work to be performed by the Department.

   Work in this project may require access to various Department buildings and Hubs requiring coordination of all work activities in these locations with the Engineer before access is needed. Work in this project requires system configuration tasks to be performed by the Department before some Contractor-installed items can be brought online and completely system tested. Coordinate all work activities needing system configuration with the Engineer a minimum of 14 days prior to any testing.

   Install all Hub and control center equipment in the presence of the Engineer. Locate new equipment in new or existing equipment racks or equipment frames as shown in the Plans.

   Provide proper electrical service, including grounding and current rating, in the equipment racks and equipment frames for all hardware installed under this project. This requirement includes existing and new equipment racks and equipment frames. Obtain Engineer approval prior to installation of all electrical service for hardware in control centers. Furnish and install additional power outlet strips in new and existing equipment racks and equipment frames if needed for the new equipment.

   For any equipment that is not rack mountable with "rack ears", provide perforated shelves and secure all shelf-mounted equipment with rack mounting hardware.

   Label all wiring and cabling, including building entrance cables, jumper and patch cords, and power supply cables, using cable identification numbers as shown in the Plans or provided by the Engineer. Apply cable labels at each end and in the center of the cable. Cable labels shall consist of permanent ink printed or legibly written on self-laminating and over-wrapping label material.

   Protect cable ends at all times with acceptable end caps. Never subject any coaxial cable to a bend radius of less than six (6) inches. Provide grommets, guides and/or strain relief material where necessary to avoid abrasion of or excess tension on wire and cable.

2. Serial Data Terminal Server

   For Hubs, install the Serial Data Terminal Servers, 16 Port, in equipment frames as shown in the Plans and in accordance with the Manufacturer's recommendations. For equipment cabinets and as required, install the Serial Data Terminal Servers, Type B, as shown in the Plans and in accordance with the Manufacturer's recommendations. Furnish and install all interconnection wiring and power service connections.

3. Patch Cords

   a. General Requirements:

      - Use patch cords only within control center buildings, communication Hubs, and equipment cabinets.

- Label all patch cords using cable identification numbers as shown in the Plans or provided by the Engineer. Apply cable labels at each end and in the center of the cable. Use printer-generated adhesive overlapping cable labels.
- Neatly route, dress and secure patch cords in the equipment racks or frames and at both ends. Use all available cable management devices and/or trays. Route patch cords only vertically on the sides of the equipment racks and frames or horizontally across the bottom or top of the racks and frames; no diagonal routing is permitted. Follow all manufacturer's recommendations including bend radius requirements during all patch cord installation.

b. Fiber Optic Patch Cords: Furnish and install fiber optic patch cords in accordance with Section 935 and this section.

c. Coaxial Video Patch Cords: Where an equipment or termination facility has a connector other than BNC (such as an RCA), furnish and install a BNC adapter to connect the patch cord to the equipment or termination facility.

d. Data Patch Cords: Use data patch cords to connect all local area network and RS-standard (e.g., RS-232, RS-422/485) serial data termination facilities and equipment.

Where an equipment or termination facility has a connector other than an RJ45 outlet (such as a "D-shell" connector), furnish and install RJ45 adapters between the connectors and the network/data patch cords as approved by the Department. For any type of RJ45 adapter, provide the proper pin-out of the adapter as part of the documentation.

e. Network Switch / Field Switch Patch Cables: Furnish and install Category-5e unshielded twisted pair (UTP)/shielded twisted pair (STP) patch cables that comply with EIA/TIA-568 (current edition) for all network to device interconnects (device to switch). The maximum length of Category-5e cable should not exceed 250 feet. In no case shall the total cable distance (device to switch) including risers, connectors, and connecting patch cables exceed 300 feet (90 meters). All cables over 250 feet shall be tested for transmission capability and cable certification using a Network Tester. All tests shall be performed with the Engineer present.

f. Voice/Telephone Patch Cords: Use voice/telephone patch cords to connect all voice or telephone communications facilities and equipment. Furnish and install the voice/telephone patch cords with the necessary pair sizing and connector for the equipment being connected.

4. Network Switch, Layer 3 Gig-E

For Hubs, furnish and install Network Switches, Layer 3 GigE that are compatible with the existing NaviGAtor Ethernet network as shown in the Plans, as applicable. The existing network consists of Nortel Networks 8600 Layer 3 GigE switches.

Furnish and install the network switch and all fiber optic jumper cabling necessary to connect to the fiber optic cable FDC as shown in the Plans.

5. Hub Uninterruptible Power Supply

Furnish and install a dedicated electrical service branch circuit from the Hub main service panel for the UPS system. Ensure that the UPS system branch circuit is in accordance with all recommendation of the UPS manufacturer, including the provision of a locking plug/receptacle connection. Make all electrical conduit and fittings rigid EMT or approved equivalent. Locate the branch circuit receptacle as close as possible to the UPS mounting position to minimize the UPS input line cord and to minimize tripping hazards.

Configure the electrical service inputs for all network switches, serial data terminal servers, video encoders/decoders, and video switches to be supplied by the UPS. Furnish and install line cords, power strips, and all incidental materials to configure the UPS service to the above equipment.

B. Communications Subsystem

1. General

   a. Use Network Switches, Layer 3 Gig-E, Field Switches, Serial Data Terminal Servers, and Video Encoders/Decoders, as necessary or required to establish:

      - For Traffic Signals, digital data communications between local controllers and system masters and to and from Hubs and control centers
      - For Ramp Meters, digital data communications to and from equipment cabinets/Hubs/control centers
      - Digital camera video and control data communications to and from equipment cabinets/Hubs/control centers
      - Digital CMS control data communications to and from equipment cabinets/Hubs/control centers
      - Digital detector data communications to and from equipment cabinets/Hubs/control centers
      - Digital VDS processor control data communications to and from equipment cabinets/Hubs/control centers

   b. Furnish and install Network Switches, Layer 3 Gig-E, Field Switches, Serial Data Terminal Servers, and Video Encoders/Decoders, as necessary or required as specified in the Plans to ensure proper communications.

2. Installation Requirements

   a. Install all communications equipment and materials necessary for a complete communications path from the field site to the control center or communications Hub as shown in the Plans. Furnish and install all mounting and interconnection materials, including but not limited to card cages, mounting panels and rack hardware, fiber, patch/jumper cables, and power supply cables. Mount card cages and mounting panels as shown in the Plans and Detail Drawings in this section. Furnish and install the type and quantity of equipment shown in the Plans. Where the Plans show that new Field Switches, Video Encoders, VDS System Processors, Modems, and/or other devices are to be placed in existing cabinet space, furnish and install compatible mounting hardware, as required.

   b. Label all wiring and cabling, including entrance cables, jumper and patch cords, and power supply cables. Cable labels shall consist of permanent ink printed or legibly written on self-laminating and over-wrapping label material.

   c. Equipment Cabinet Mounting: All field equipment shall be mounted in a manner as to not restrict the replacement of other components in the cabinet housing.

   d. Hub/Control Center Mounting: Where data is transmitted to a receiving end such as a Hub, TCC or TMC, permanently mount the equipment as required within an equipment rack, frame.

3. Equipment Cabinet Assembly

   a. General Requirements

      Furnish and install the equipment cabinet assembly to include all devices/components, assembly, wiring and materials required in this Subsection 939.3.05.C and in Subsection 939.2.11.B.

      The equipment cabinet assembly, as described below, shall conform to all applicable sections of the Caltrans specifications and Georgia DOT Standard Specifications.

   b. Classification of Types

4. Furnish and install equipment cabinet assemblies as called for in the Plans in accordance with the following requirements for each type.

   a. Type A Cabinet – Not Applicable.

b. Type B Cabinet – Not Applicable.

c. Type C Cabinet: Furnish and install a Type C Cabinet that conforms with all materials and installation requirements of this Subsection 939.3.05.C and Subsection 939.2.11.B using a Type C Standard Cabinet Housing.

d. Type D Cabinet: Furnish and install a Type D cabinet assembly that conforms with all materials and installation requirements of this Subsection 939.3.05.C and Subsection 939.2.11.B using a Type D Standard Cabinet Housing.

e. Type F Cabinet: Furnish and install a Type F cabinet assembly that conforms with all materials and installation requirements of this Subsection 939.3.05.C and Subsection 939.2.11.B using a Type F Standard Cabinet Housing.

939.3.06 Quality Acceptance

The Engineer, based on justification of public interest, may order any completed or partially completed portions of the project placed in service. Such action is not an acceptance of the project in whole or in part, nor is it a waiver by the Engineer of any provision of the specifications. Assume no right to additional compensation or extension of time for completion of the work or any other concession because of the use of the project or any part thereof prior to final acceptance of the completed project. Fully maintain all equipment prior to final acceptance, which includes but is not limited to equipment configuration and communication systems.

Perform all acceptance testing in the presence of the Engineer. Notify the Engineer of a desired acceptance test schedule no less than 14 calendar days prior to beginning the testing except for testing using the NaviGAtor software and existing NaviGAtor control center and communications equipment. For acceptance testing using the NaviGAtor software and existing NaviGAtor control center and communications equipment, coordinate the testing schedule with the Engineer no less than 30 days prior to the start of this testing. Do not conduct any testing during any State or Federal holiday.

A. Equipment

1. General

   Coordinate all work activities needing system configuration with the Engineer a minimum of 14 days prior to any testing.

   Work in this project includes furnishing specific equipment to the Department for configuration and use by the Department during the course of the project. Operate this equipment and maintain the proper configuration until final acceptance of the project, including throughout the project duration after the Department has started using the equipment.

2. Start-up Testing

   Provide start-up testing for the various devices supplied as described herein and as further detailed in the respective equipment specification section.

   The Contractor shall provide a test plan and procedures for review and approval by the Engineer prior to any testing. The Contractor shall conduct a pre-test prior to contacting the Engineer prior to final inspection. Pretest shall be defined as all tests that are performed for the Engineer during inspection. The Contractor shall provide all test equipment and software necessary to perform the tests. Perform all tests in the presence of the Engineer unless otherwise specified.

   Include in the test plan and procedures, as a minimum, the following tests:

   a. Device or system power-on self test

   b. Conduct visual inspection of device or system to confirm presence of all components and features specified by the Contract specifications and otherwise customarily provided by the manufacturer

c. Test using the built-in manufacturer's product or system diagnostics to confirm proper performance

d. Test all input and output ports

e. Demonstrate that all functional features of the device or system are operational

f. An operational test demonstrating equipment performs as intended and as prescribed by the manufacturer and meets the requirements of the Contract specifications.

g. Configure the components of the device, make necessary settings or adjustments, and power-on according to the manufacturer's instructions.

3. Serial Data Terminal Server

Prior to acceptance of any Serial Data Terminal Servers (all Types), the following shall be performed:

a. Connect with serial cable to Serial Data Terminal Server with PC or laptop using HyperTerminal.

b. Ensure that the Serial Data Terminal Server recognizes all ports and attached expansion modules.

c. Input addressing for Serial Data Terminal Server and reset.

d. Determine successful Ethernet connectivity (link light at Hub/switch).

e. Successfully telnet from PC or laptop to Serial Data Terminal Server through Hub/switch.

f. Print to screen configuration information that is consistent with addressing data previously entered into Serial Data Terminal Server.

4. Field Switches

Prior to acceptance of any Field Switch (all Types), the following shall be performed:

a. Stand-alone Acceptance Test (SAT)

- The Contractor shall provide the test plan and procedures for review and approval by the Department prior to any SAT activities. The test procedures shall provide comprehensive tests to verify and demonstrate full compliance with these specifications and device functionality. Pass and fail criteria shall be identified for each test for review and approval by the Department.
- The Contractor shall provide all test equipment and software necessary to perform the tests.
- The Department will perform the SAT in a test area provided by the Department. A Contractor representative shall be present during the SAT.
- The Field Switch will be assembled and connected to power in a stand-alone configuration.
- The Field Switch will be powered up and allowed to initialize, boot and run self-diagnostic tests as defined in the Department-approved test procedures.
- After the Field Switch has started and initialized, test procedures will be executed.
- After the test procedures have been executed, the Field Switch will be allowed to run, uninterrupted, for period of seventy-two (72) hours and then rebooted. The switch shall hold all settings and configurations through reboots and power failures. Once this is confirmed the 30 day burn-in period would then begin.
- At the end of the burn-in period, the unit will be re-started and configuration verified.
- Upon completion of all test procedures, the Contractor will be notified of SAT Field Switch acceptance or failure. If the unit fails the test, the Contractor shall replace it at no additional cost to the Department and the test procedure shall be re-started.

b. Operational Test

- The Contractor shall provide the test plan and procedures for review and approval by the Department prior to any Operational Test activities. The test procedures shall provide comprehensive tests to verify and demonstrate full compliance with these specifications in regards to device or subsystem network performance. Pass and fail criteria shall be identified for each tests for review and approval by the Department.
- Upon completion of all test procedures, the Contractor will be notified of SAT Field Switch acceptance or failure. If the unit fails the test, the Contractor shall replace it at no additional cost to the Department and the test procedure shall be re-started.
- The Contractor shall provide all test equipment and software necessary to perform the tests.
- After successful completion of the SAT, the Department will configure and connect the Field Switch to the GDOT Network.
- Verify communications and network control from the Field Switch to/from the Hub and TMC.
- Verify system integrity through comprehensive diagnostics.
- Verify 10/100Base-T/TX interfaces and operations.
- Verify 1000Base-X interfaces and operations.
- Upon completion of all the tests, the Contractor will be notified of Operational Field Switch acceptance or failure. If the unit fails the test, the Contractor shall replace the unit at no additional cost to the Department and the test procedure shall be restarted.

5. Interim Field Subnet Test

   Prior to acceptance of any network communications equipment or field device connected to the communications network, perform and successfully complete an Interim Field Subnet (IFS) test. All Start-Up and Standalone testing shall be successfully completed on all devices before an IFS test can begin. Include in the IFS test all network communications devices in the project, including but not limited to all field switches, video encoders and decoders, VDS processors, CMS controllers, microwave radar detectors, serial data terminal servers, ramp meter signal controllers, and traffic signal controllers.

   a. Provide the test plan and procedures for review and approval by the Department prior to any IFS activities. The test procedures shall provide comprehensive tests to verify and demonstrate full compliance with these specifications and device functionality. Pass and fail criteria shall be identified for each test for review and approval by the Department. The test procedures shall identify all field sites and devices in the project, as well as the field subnets the sites are attached to.

   b. Furnish all test equipment and software necessary to perform the tests, including but not limited to laptop PC with web browser and network analysis software, temporary field switch or other compatible media converter, and all necessary patch cords.

   c. Prior to conducting a scheduled IFS test, conduct a dry-run test to ensure all preparations for the IFS test are complete. The Engineer reserves the right to attend the dry-run test.

   d. An IFS test shall be conducted for each field subnet, which is typically a group of field sites connected to a fiber pair ring between two hubs. The test shall be conducted from one of the hubs. During the test, every network device shall be pinged, probed by SNMP or equivalent status queries, logged into, and connected to by other methods as needed to demonstrate that the equipment is functional, contains the proper base programming data, and is in the proper location.

939.3.07 Contractor Warranty and Maintenance

Provide a 3 year Manufacturer's support (usual and customary warranties) period for all equipment and materials furnished and installed as part of the Communications and Electronic Equipment System. Include in warranty and support all Contractor or Manufacturer activities related to maintenance, removal and replacement of parts and materials during the period of support. Begin the Manufacturer warranty support period upon successful completion of equipment cabling and component

testing as outlined in Subsection 939.3.06. All Manufacturer warranties shall be continuous throughout the period and state that they are subject to transfer to the Department.

939.3.08 Training

Provide training as required herein. Include with training all supplies, equipment, materials, handouts, travel, and subsistence necessary to conduct the training. Furnish a training notebook in a labeled 3-ring binder to each trainee.

Provide installation, operations, and maintenance training on the equipment at a site near the project area. Personnel trained by the various equipment manufacturers and authorized by said manufacturers shall perform the training. Provide installation, operations and maintenance training for up to twelve (12) people. Include in this training both classroom training and hands-on training. Limit in-shop and in-field training to group sizes of four (4) people at a time. Conduct all training in half-day sessions. Two half-day sessions may be held on the same day. The total of the training shall consist of at least six (6) clock hours of training for each participant. Provide a course content of, at a minimum, the following:

A. Field Switches

1. Unit set-up and configuration
2. Diagnostic and maintenance
3. Performance tuning
4. Hands-on use of Field Switches for each trainee

939.4 Measurement

A. Equipment

For each equipment unit listed below, furnish and install all mounting and interconnection materials, including but not limited to card cages, mounting hardware, all patch cords of all types, and power strips and power supply cables at no separate cost to the Department. If software device drivers/communication protocols not currently incorporated into NaviGAtor software are needed, provide and integrate them at no separate cost to the Department.

1. Serial Data Terminal Server

   Serial Data Terminal Servers (16 Port and all Types) are measured for payment by the number actually installed, complete, functional and accepted. For each unit provided, furnish and install any required Serial Data Terminal Servers and serial port concentrators as specified in Subsection 939.2.A.2 and in the Plans at no separate cost to the Department.

2. Hub Uninterruptible Power Supply

   Hub Uninterruptible Power Supplies are measured for payment by the number actually installed, complete, functional and accepted.

3. Network Switch, Layer 3 Gig-E

   Network Switches, Layer 3 GigE (all Types) are measured for payment by the number actually installed, complete, functional and accepted. For each unit provided, furnish and install any required switching Hubs, router and switching chassis as specified in Subsection 939.2.A.5 and in the Plans at no separate cost to the Department.

4. GBIC Routing Switch Module

   GBIC Routing Switching Modules (all Types) are measured for payment by the number actually installed, complete, functional and accepted.

5. GBICs

   GBICs (all Types) are measured for payment by the number actually installed, complete, functional and accepted.

6. Field Switches:

   Field Switches (all Types) with rack mounting hardware are measured for payment by the number actually installed, complete, functional and accepted.

7. Field Switches with Power Over Ethernet (POE)

   Field Switches (POE) (all Types) with rack mounting hardware are measured for payment by the number actually installed, complete, functional and accepted.

8. Equipment Frame

   Equipment frames are measured for payment by the number actually installed, complete, functional and accepted.

B. Equipment Cabinet Assembly

Equipment cabinet assemblies are measured for payment by the number actually installed, complete, functional and accepted. For each unit installed, furnish all required items, including but not limited to identification and documentation, lighting, contact switch, fan, contact-closure sensor, patch cords, and cables at no separate cost to the Department

C. Testing

Testing is to be included in the cost of the project and providing the devices.

D. Training

Training is measured as a lump sum for all supplies, equipment, materials, handouts, travel, and subsistence necessary to conduct the training. Include in the lump sum bid price for training all supplies, equipment, materials, handouts, travel, and subsistence necessary to conduct the training.

939.4.01 Limits

Not applicable

939.5 Payment

Payment is full compensation for furnishing and installing the items complete in place according to this Specification. Payment for all items is as follows:

Item No. 939	Serial Data Terminal Server, 16 Port and Type _	Per Each
Item No. 939	Type__ Cabinet	Per Each
Item No. 939	Network Switch, Layer 3 Gig-E, Type _	Per Each
Item No. 939	GBIC Routing Switch Module, Type _	Per Each
Item No. 939	GBIC, Type _	Per Each
Item No. 939	Field Switch, Type _	Per Each
Item No. 939	Field Switch (POE), Type _	Per Each
Item No. 939	Hub Uninterruptible Power Supply	Per Each
Item No. 939	Equipment Frame	Per Each
Item No. 939	Training	Lump Sum

939.5.01 Adjustments

Not applicable

Section 940-NaviGator Advanced Transportation Management System Integration

940.1 General Description

This work includes coordination and integration of the project into the Department's NaviGAtor advanced transportation management system to provide a complete and fully operational expansion of the Department's NaviGAtor system as shown in the Contract Documents.

Integration Requirements: All field devices, communications and network systems installed during the project shall be fully integrated into the existing NaviGAtor system and shall form a complete, usable and fully integrated system capable of being fully controlled and operated from the Transportation Management Center.

940.1.01 Related References

A. Standard Specifications

Section 631 – Permanent Changeable Message Signs

Section 647 – Traffic Signal Installation

Section 797 – Hub Buildings

Section 925 – Traffic Signal Equipment

Section 935 – Fiber Optic System

Section 936 – Closed Circuit Television System (CCTV)

Section 937 – Detection Systems

Section 939 – Communication and Electronic Equipment

B. Referenced Documents

Not applicable

940.1.02 Submittals

Submit six copies of the Integration Plan to the Engineer within 15 days of Contract Notice to Proceed. Submit six copies of the Acceptance Test Plan to the Engineer within 45 days of Contract Notice to Proceed.

940.2 Materials

Not applicable

940.3 Construction Requirements

Not applicable

940.3.01 Personnel

Not applicable

940.3.02 Equipment

Not applicable

940.3.03 Preparation

Not applicable

940.3.04 Fabrication

Not applicable

940.3.05 Construction

Contractors that need access to the GDOT hub buildings during the construction activity to complete their work shall purchase an electronic programmable key and key programmer. Contractors needing access to a hub building must submit a System Change Request (SCR) form if installation of new equipment is being performed, or a Maintenance and Repair Report (MARR) form for regular routine maintenance. These forms shall be submitted via email to GDOT at least 72 hours in advance. The system currently in use for Hub building access is CyberLock by Videx. To purchase keys, key programmers and get technical assistance on the GDOT CyberLock system, contact:

Glen Peifer

Peifer Companies LLC

5287 Knight Arnold Rd.

Memphis, TN 38118

901-363-6396 phone

901-363-6986 fax

www.PeiferLock.com

940.3.06 Quality Acceptance

A. Overall System Testing

While each individual device and subsystem requires specific testing, the overall system requires detailed testing to demonstrate that the system is fully integrated and forms a complete and usable system.

Acceptance of the overall system requires successful completion of all individual subsystem tests and then completion of an overall 30 day burn-in period of the complete system once it is fully integrated and functioning as a complete system.

Perform all acceptance testing in the presence of the Engineer. Notify the Engineer of a desired acceptance test no less than fourteen calendar days prior to beginning the testing except for testing using the NaviGAtor software and existing NaviGAtor control center and communications equipment. For acceptance testing using the NaviGAtor software and existing NaviGAtor control center and communications equipment, coordinate the testing schedule with the Engineer no less than 30 days prior to the start of this testing. Do not conduct any testing during any State or Federal holiday.

If, in the Department's judgment, the Contractor is not demonstrating progress in solving any technical problem, the Contractor may be directed to supply Factory technical representation and diagnostic equipment at no cost to the Department until satisfactory resolution of those defined problems.

The Engineer may direct any completed or partially completed portions of the project to be placed in service. Such action cannot be deemed an acceptance of the project in whole or in part, nor shall such action be construed as a waiver by the Engineer of any provision of the specifications. Assume no right to additional compensation or extension of time for completion of the work. Fully maintain all equipment until final acceptance, which includes but is not limited to equipment configuration and communication systems that are being integrated.

Make the acceptance testing plan a detailed and thorough procedure that demonstrates that all equipment, hardware and work meet all requirements of the Contract. These requirements include but are not limited to all design, construction, materials, equipment, assembly, documentation of manufacturer's certification of assembly and configuration, environmental, performance, communications, video and data communications signal strength and clarity, compatibility with the NaviGAtor software, and documentary requirements of the Contract.

B. Burn-in Period

Provide a 30-day burn-in period for all work and equipment included in the Contract. The burn-in period shall consist of full operation of the entire system from the Transportation Management Center or an alternate location designated by the Engineer.

Commence with the burn-in period upon written authorization by the Department to commence. Terminate the burn-in period 30 consecutive days thereafter unless an equipment malfunction occurs. Stop the burn-in period for the length of time any equipment is defective. After repairing the equipment the Department shall determine that it functions properly.

Successful completion and acceptance of the burn-in period will be granted on the 30th day unless any equipment has malfunctioned during the the burn-in period. If any equipment has failed during the 1st through 15th day, then the final acceptance shall be withheld until all the equipment is functioning properly for 30 consecutive days after repair. If any equipment has failed during the 16th through 30th day, final acceptance will be withheld until all the equipment is functioning properly for 15 consecutive days after repair.

When a specific piece of equipment has malfunctioned more than three times during the 30 day burn-in period, replace that equipment with a new unit and repeat the 30 day burn-in period.

C. Contractor Responsibilities

During the burn-in period, maintain all work under this Contract in accordance with the Specifications. Restore any work or equipment to proper operating condition within 12 hours after notification.

D. Department Responsibilities

Department responsibilities during the burn-in period will be as follows:

1. Expeditious notification of Contractor upon failure or malfunction of equipment.
2. In the event that the Contractor does not provide the services enumerated above under his contract responsibilities, the Department or its authorized agents may in the interest of public safety take emergency action to provide for adequate traffic control. Pay any costs incurred as a result of these emergency actions. Such action by the Department will not void any guaranties or warranties or other obligations set forth in the Contract.

E. Burn-In Period Acceptance

The Department will make burn-in period acceptance after satisfactory completion of the required burn-in period and on the basis of a comprehensive field inspection of the complete system in accordance with the Specifications. Upon burn-in period acceptance but prior to Final Acceptance of the entire Contract, maintain the system in accordance with all contract requirements.

F. Ramp Meter Testing

The Contractor shall submit to and obtain approval from the Engineer a ramp metering testing procedure for each specific ramp meter location. The testing procedure shall demonstrate that all components: hardware, cable, and connections furnished and installed by the contractor operates correctly and that all functions are in conformance with the specifications. Testing requirements are also outlined in Section 647.

The Department will provide controller firmware. The Contractor shall provide the controller to the Department. The Department will load the firmware into the controller and return to the Contractor.

At a minimum, the Contractor shall demonstrate to the Engineer:

1. The I-VDS and loop detectors at each location are functioning with expected accuracy as specified.
2. The ramp meter signals function properly at all stages, including non-metering, startup, metering and shutdown.
3. In multi-lane configurations, the ramp meter can operate a simultaneous release of vehicles from all lanes as well as an alternating or staggered release of vehicles from the two (or three) lanes.
4. Queue detectors are functioning as specified, including both queue detection and queue override.
5. The ramp meter functions properly for both local traffic responsiveness and time of day operations.
6. The advance warning sign can be clearly seen and can be activated and deactivated properly.

7. The ramp meter can communicate properly with the Hub/TMC.

8. The traffic enforcement heads are operating as per the plans and can be seen by enforcement personnel.

The Contractor shall coordinate closely with the NaviGAtor system integrator for conducting ramp meter operational tests. Note: Pretest should be performed prior to calling the Engineer for inspection. Pretest shall be defined as all tests that will be performed during the Engineer's inspection. Begin operational tests after the Engineer is satisfied that all work has been completed. After the ramp meter has been placed in operation, the contractor, in coordination with the system integrator, shall demonstrate that all equipment furnished and installed by the Contractor operates with all software and firmware as specified.

After successful completion of the test procedure, each ramp meter assembly shall go through a burn-in period for 30 consecutive days of normal ramp metering operations. During the burn-in period, the Contractor shall ensure that all Contractor-supplied equipment operates without failures of any type. If any equipment component malfunctions or fails to provide the specified functionality during the 30-day burn-in period, the Contractor shall replace or repair the defective equipment within 48 hours of notification by the Engineer.

After the malfunctioning component(s) have been repaired or replaced to the satisfaction of the Engineer, the Contractor shall begin a new 30-day burn-in period. The new 30-day burn-in period shall apply only to equipment components supplied by the Contractor. In the event of a failure or malfunctioning of equipment furnished by others which prevents the 30-day burn-in test from continuing, the Engineer will suspend the burn-in test and resume when the other equipment failures are corrected.

G. As-Built Documentation

Submit as-built documentation of all work provided in accordance with this specification prior to Contract final acceptance. Include in the as-built documents the following documents as a minimum as they are applicable. Supply manuals and wiring diagrams at the time of installation. Deliver as-builts no later than 30 days after completion of installation or as otherwise specified in the Plans or Specifications. Provide complete and accepted as-builts, which shall be reviewed and approved by the Department prior to any final acceptance or payment.

1. Operator's Manual

   a. Furnish a manual containing detailed operating instructions for each different type of equipment.

2. Maintenance Procedures Manuals

   a. Furnish a manufacturer's manual containing detailed preventative and corrective maintenance procedures for each different type or model of equipment.

3. System Connection Diagrams

   a. Furnish diagrams showing fiber optic and electric system interconnection cables and terminations. Include a diagram showing the location of all equipment in the new equipment racks or frames in hubs. Include diagrams that clearly indicate the use of each fiber.

4. As Built Drawings

   a. Provide as-built drawings showing the final location of all new equipment and communications installed, including but not limited to CCTV and VDS support poles, new utility poles, new equipment cabinets, detection systems, CMS, and ramp meter support poles. Show all routes and locations of the final cable installation in-place and complete. For aerial cable installations show poles, pole attachment heights, spans, co-locations, splice closures, maintenance/storage coils, and vertical risers. For underground cable installations show conduit size, quantity and routes, pull boxes and ECBs, closures, and cabinet terminations. Provide the cable distance marking documentation required in 935.3.05.G.2. The as-built drawings shall also include any other device specific details that are required in the individual specifications.

b. The location for all items noted above shall be indicated with the state-plane GPS coordinates shown on the plans beside each item. All markups on the plans shall be shown in red. A separate Excel file with the GPS coordinates for each item shall also be submitted with the as-built drawings.

c. Except for standard bound materials, bind all 8.5”x11” documentation, including 11” x 17” drawings folded to 8.5”x11”, in logical groupings in loose-leaf binders of either the 3-ring or plastic slide-ring type. Permanently and appropriately label each such bound grouping of documentation.

d. Furnish five (5) copies of all bound documentation.

940.3.07 Contractor Warranty and Maintenance

Not applicable

940.3.08 Training

Not applicable

940.4 Measurement

The Department will pay all costs of coordination with and integration of the project into NaviGAtor under the integration pay item when the pay item is included in the Contract. The integration pay item is measured as a lump sum for all supplies, materials and subsistence it requires.

When the integration pay item is not included in the Contract, all costs of coordination with and integration of the project into NaviGAtor with all supplies, materials and subsistence it requires shall be included in other Contract items. The Department will make no separate payment for integration.

940.4.01 Limits

Not applicable

940.5 Payment

The Department will pay for integration that is complete, in place and accepted by the Department. Payment is full compensation for the work.

Payment for Section 940 is made under:

Item No. 940	NaviGAtor Integration	Lump Sum

– or –

Not applicable [when the Integration pay item is not included on the job.]

940.5.01 Adjustments

Not applicable

Section 941—Macro-Synthetic Fibers for Concrete Reinforcement

941.1 General Description

This section includes the requirements for manufacturing macro-synthetic fibers which are permitted as reinforcement in lieu of steel reinforcement in the following selected precast concrete products:

- Precast concrete manhole riser sections
- Precast concrete flared end sections

941.1.01 Related References

A. Standard Specifications

Section 866–Precast Concrete Catch Basin, Drop Inlet, and Manhole Units

B. Referenced Documents

ASTM C 1116

ASTM C 1399

ASTM D 3822

QPL 86

GDOT Standard 1120

941.2 Materials

For a list of sources, see **QPL 86**.

941.2.01 Macro-Synthetic Fibers for Concrete Reinforcement

A. Requirements

1. Ensure that macro-synthetic fibers are manufactured from virgin polyolefins (polypropylene and polyethylene) and comply with ASTM C 1116.4.1.3. Fibers manufactured from materials other than polyolefins must show documentary evidence confirming their long term resistance to deterioration when in contact with the moisture and alkalies present in cement paste and/or the substances present in air-entraining and chemical admixtures.
2. The minimum fiber length required is 1.50 in (38 mm).
3. Ensure that macro-synthetic fibers have an aspect ratio (length divided by the equivalent diameter of the fiber) between 45 and 150.

B. Acceptance

1. Ensure that macro-synthetic fibers have a minimum tensile strength of 40 ksi (276 MPa) when tested in accordance with ASTM D 3822.
2. Minimum dosage rate in pounds of fibers per cubic yard is established by determining a minimum average residual strength of no less than 150 psi (1034 kPa) when tested in accordance with ASTM C 1399. In all cases, ensure a minimum fiber dosage rate of 5 lbs/yd^3 (2.9 kg/m^3) and a maximum fiber dosage rate of 10 lbs/yd^3 (5.9 kg/m^3).
3. Ensure that macro-synthetic fibers have a minimum modulus of elasticity of 400 ksi (2758 MPa) when tested in accordance with ASTM D 3822.
4. The fiber manufacturer is required to obtain independently performed test results that confirm the requirements listed herein and submit those for approval by the Engineer.
5. Approved fibers are listed on the Department’s Qualified Products List 86 (QPL-86), "Macro-Synthetic Fibers for Concrete Reinforcement".

C. Materials Warranty

General Provisions 101 through 150.

Section 950—Telecommunication Facilities

950.1 General Description

Specifications for this work will be included elsewhere in the Contract.

Section 951—Cable Systems

951.1 General Description

Specifications for this work will be included elsewhere in the Contract.

Section 952—Non-Invasive Magneto-InductiveVehical Sensor

952.1 General Description

Specifications for this work will be included elsewhere in the Contract.

Section 955—Highway Advisory Radio System

955.1 General Description

Specifications for this work will be included elsewhere in the Contract.

Section 960—Precast Reinforced Concrete Three Sided Culvert

960.1 General Description

Specifications for this work will be included elsewhere in the Contract.

Section 997—Mowing

997.1 General Description

Specifications for this work will be included elsewhere in the Contract.

GDOT PAY SOFTWARE SYMBOLS

ENGLISH		METRIC		
UNIT OF MEASURE	**GDOT PAY SOFTWARE SYMBOL**	**UNIT OF MEASURE**	**ASTM E-380 SYMBOL**	**GDOT PAY SOFTWARE SYMBOL**
Inch	IN	Millimeter	mm	MM
Linear Foot	LF	Linear Meter	m	LM1
Gross Linear Foot	GLF	Gross Linear Meter	m	GLM1
Mile	MI	Kilometer	km	KM
Gross Linear Mile	GLM	Gross Linear Kilometer	km	GLKM
Acre	AC	Hectare	ha	HA
Square Foot	SF	Square Meter	m^2	M2
Square Yard	SY	Square Meter	m^2	M2
Cubic Foot	CF	Cubic Meter	m^3	M3
Cubic Yard	CY	Cubic Meter	m^3	M3
Gallon	GL	Liter	L	L
Thousand Gallons	MG	Cubic Meter	m^3	M3
Thousand Foot Board Measure	MBM	Cubic Meter	m^3	M3
Thousand	M	K	k	K
Pound	LB	Kilogram	kg	KG
Ton (2000 lb)	TN	Megagram (1000 kg)	Mg	MG

ALPHABETIC INDEX

A

Abandoned Obstructions 132, 754
Abbreviations 1, 623-624
Abrasives for Blast Cleaning 661, 929, 1098-1099
Adjusting to Grade of Miscellaneous Roadway Structures 753, 757
Agreement 3-4, 9, 18, 21-23, 26, 30, 37, 49, 60-61, 65, 161, 204, 208, 340, 576, 724, 1035, 1269, 1550
Agricultural Lime 34, 97, 99, 446, 717, 1015, 1023, 1029-1030, 1032-1035, 1299
Air-Entraining 474, 482, 484, 549, 694, 739, 1159-1160, 1583
Air-Entraining Admixtures 474, 482, 549, 739, 1159-1160
Alteration of Plans or Character of Work 18
Aluminum Alloy Bolts 611, 1208
Aluminum Alloy Materials 870, 1207
Aluminum Alloy Pipe 611, 699, 713, 721, 724, 727, 1186-1188, 1210
Aluminum Alloy Rivets 611, 1209
Aluminum Alloy Sheet and Plate 611, 615, 1208
Aluminum Alloy Shims 611-612, 1210
Aluminum Alloy Washers 611, 1209
Aluminum Caulking Compound 1288
Aluminum Handrail 610-613
Aluminum Powder 553-555, 577, 1180, 1249, 1458
Aluminum Structural Shape Posts 1329, 1333
Anchor Bolts 45, 517, 529, 534-535, 557, 559, 599-600, 609, 612, 733-734, 736-738, 791, 801, 814, 834, 845-847, 849, 853, 872, 888-890, 970-971, 1212-1213, 1354, 1356-1359, 1448-1449
Appurtenances for Water Systems 963
Arch Culverts 698-705, 713-716, 764
Asphalt Concrete 50, 289, 300, 310, 327, 336, 657-658, 729, 943, 945, 1149, 1153, 1172
Asphalt Plank 561-563, 1146
Asphalt Plank Bridge Floor 561-563
Asphalt Plant 272, 279, 299, 307, 309, 1151
Asphalt-Rubber Joint and Crack Seal 323-327
Authority of 23, 175, 1191
Authority to Make Changes 18
Award and Execution of Contract 16-17

B

Backfill for Minor Structures 148-153, 165, 167, 598, 698, 713, 749, 844, 957
Backfill Materials 148, 150-152, 154, 699, 704, 714-715, 727, 804, 815, 976, 1108, 1114-1117
Bags 106, 109, 111, 279, 450, 475, 481, 483, 639, 743, 745, 917, 1041, 1072, 1074, 1099, 1183, 1291, 1293, 1481
Bar Reinforcement Steel 488, 582, 584, 593-594, 604, 607, 633, 1002
Barbed Wire 82, 863, 865, 867, 1320, 1323

Barricades 39, 264, 372, 410, 419, 663, 761, 828-829, 996
Barriers 46, 112, 124-126, 372, 387-388, 410, 492, 503, 507, 511, 593, 657, 669, 772, 786-788, 792-802, 805, 813, 816-818, 998, 1038, 1075-1077, 1309
Base and Subbase Courses 206-207, 214-215, 226, 233, 239, 245, 251, 254, 261
Bearing Plates with Polytetrafluroethylene Surfaces 732
Bearing Surfaces 526-528, 1306
Bidding Requirements and Conditions 10-16
Bids 2, 5, 10-13, 15-16, 24, 32, 1317
Bituminous Adhesive For Raised Pavement Markers 924, 927, 1264-1267
Bituminous Coated Corrugated Steel Culvert Pipe 1194
Bituminous Material 58-59, 199, 209-210, 227-230, 232, 252, 267, 271-273, 278-279, 298, 300, 302, 314, 329, 331-332, 336-339, 341-346, 356, 389-390, 396, 398, 653, 1062, 1121, 1147, 1162, 1194-1196
Bituminous Plastic Cement 599, 602, 699, 807, 1203, 1206
Bituminous Prime 160, 164, 193-194, 199, 201, 204, 206, 214-215, 217, 222, 224, 226-227, 230-235, 237-239, 241-243, 245-246, 248-249, 251, 253, 258-260, 329-332, 353, 655
Bituminous Surface Treatment 204, 267, 319, 329-330, 333, 337-347, 353, 1085-1088, 1134
Bituminous Tack Coat 59, 204, 267, 270, 274, 277, 314, 318-320, 333-336, 347, 350, 356, 361, 396, 431, 433-435, 655, 658
Bituminous Treated Roving 102-103, 1069
Blanket 42, 106, 143, 162, 185-186, 190-191, 244, 508, 723, 743, 745-746, 1023, 1061-1067, 1070-1071, 1103
Blanket for Fill Slopes 143, 185-186
Boiled Linseed Oil 500, 504, 1289
Borrow 20, 46, 96, 136, 143, 145-148, 153, 156, 158-159, 161, 163-165, 176, 181, 206, 233, 237, 242-243, 793, 797, 800-801, 1054
Borrow Excavation 145-148, 153, 165, 206, 233, 237, 793, 1054
Bracing 126-127, 149, 152, 486, 488-489, 518, 545, 629, 631, 634, 673, 810, 828, 830, 832, 846, 856, 863, 900, 967, 1239, 1244-1245, 1285-1286, 1320, 1322, 1329, 1445, 1447, 1457
Brick 135, 709-712, 749-751, 757-758, 957-960, 1090, 1127, 1178
Brick Masonry 709, 749-751, 957, 959
Bridge Complete 3, 683, 689-691
Bridge Excavation and Backfill 167-171, 469, 638, 689
Bronze 515, 517-518, 529, 536, 557-558, 969, 1231-1232, 1249-1250, 1366
Bronze Bearings 1231-1232
Bronze Plates 518, 536, 558
Buildings 8, 20, 40, 74-75, 77-78, 80-81, 84, 130, 134, 306, 755, 776, 864, 1080, 1085, 1238, 1556, 1570, 1578-1579
Burlap 97, 350, 365, 371-372, 405, 410, 418, 454, 459, 496, 498, 500, 660, 664, 743, 954, 1036, 1038, 1040, 1163-1164, 1251, 1258, 1262, 1291, 1293, 1295
Bushings 515, 517, 536-537, 557, 647, 884, 886, 966, 988, 1231-1232, 1249-1250

C

Calcium Chloride 446, 475, 494, 549, 1161, 1286, 1302, 1308
Capacity 8, 11, 13, 15, 27, 46, 49, 57-58, 76-77, 83, 113, 175, 182, 208, 210-211, 276, 325, 423, 447, 465, 477-479, 483, 485, 566, 569, 586, 620, 622, 629, 639, 681, 688, 720, 733, 735, 737, 743, 776, 779, 836-837, 887, 944, 954, 1000, 1002, 1007, 1010, 1055-1056, 1108, 1111, 1214-1216, 1218, 1229, 1251, 1293, 1371, 1395, 1414-1416, 1421-1422, 1507, 1560, 1567
Cast Aluminum Alloy Railing Posts 1225-1226
Cast Iron Soil Pipe 1189
Castings and Forgings 515, 757, 870, 957, 964, 1225-1228
Catch Basins 8, 130, 132, 750, 755, 812, 957, 959-962, 1178, 1261
Cationic Asphalt Emulsion 302, 314, 333, 337, 347-348, 353, 355-356, 358, 1142-1146
Cattle Pass 678
Cement Grout 494, 757-758, 769-770, 1181, 1257
Cement Stabilized 36, 206, 210, 213, 222, 224-225, 243, 250, 258, 260, 834
Certified Mill Test Reports 36, 538, 566, 846, 1229-1230
Chain Link Fence 82, 863, 1320-1321
Channel Excavation 137-139, 145, 152, 165
Channel Type Shear Connectors 595-597
Check Point Shelter 1080, 1084
Chemical Admixtures 262, 364, 404, 549, 1159, 1161, 1583
Chlorides 445, 484, 497, 549, 707, 769, 805, 1116-1117, 1250, 1302, 1481-1482
Claims for Adjustments and Disputes 22, 26, 44

Clay Pipe 1047, 1190
Clay Underdrain Pipe 1047
Closed Circuit Television (CCTV) 1080, 1501-1522
Coal Tar Emulsion Seal Coat 322
Coarse Aggregate for Asphaltic Concrete 267, 302, 1094
Coarse Aggregate for Underdrains 1102
Cofferdams 46, 167-168, 638-641, 697
Commissioner 3, 34, 44, 63, 65
Compensation 22, 25-30, 42-46, 52, 60-62, 65, 78, 84, 89, 99, 101, 109-111, 119, 123, 126, 129, 135, 137, 147, 152, 157, 160, 164, 167, 173, 177, 181, 184-185, 189, 201-202, 225, 231-232, 237-238, 245, 249, 253, 256-257, 260, 266, 289, 298, 304, 308, 318, 322, 326, 329, 336, 352, 360, 362, 372, 378-379, 383, 385, 390, 395, 398, 411, 415, 421, 436, 444, 451, 455, 460, 462, 464, 469, 484, 510, 512, 547, 561, 570, 579-580, 633-635, 641, 646, 650, 660, 677, 680, 688-689, 691, 698, 705, 713, 715-716, 719, 728, 738, 752, 756, 758-759, 761, 763, 767, 782, 788, 799, 802, 814, 820, 825, 829, 834, 843, 856, 858, 862, 904, 906, 908, 914, 923, 927, 929, 931, 941, 948, 952, 956, 961-962, 975-976, 993-994, 998, 1004, 1012, 1029, 1034, 1046, 1051, 1053, 1055-1056, 1060, 1063, 1066, 1069, 1071, 1077, 1427, 1478-1479, 1500-1501, 1522, 1529, 1554, 1573, 1577, 1579, 1582
Concrete Pavement 140, 179, 221, 247-248, 261, 276, 314, 324, 327-329, 362-386, 402-416, 418, 422-423, 428, 433, 445, 447, 452-456, 469, 657, 751-752, 919-920, 938, 944, 1007, 1091, 1126, 1172, 1220, 1223
Concrete Sidewalks 424, 426
Concrete Slope Drains 421, 427
Concrete Slope Paving 424, 426-427
Concrete Spillways 421, 426, 729
Concrete Underdrain Pipe 725, 1190, 1192
Conformity with Plans and Specifications 23
Connectors 506, 513, 515, 517, 526, 595-598, 805, 840, 877, 888, 969, 990, 1377-1378, 1395, 1408, 1422, 1467-1473, 1475, 1482-1483, 1485, 1489-1490, 1492, 1496, 1498-1501, 1504, 1508-1509, 1521, 1525-1529, 1543, 1550, 1552, 1559, 1561, 1563, 1571
Construction Layout 50, 67-72
Construction Stakes 25
Contract Bond 3, 6, 16, 55-56, 65
Contract Time 4-5, 44-45, 50-54, 123, 157, 650, 689, 768, 784, 816, 842, 974, 1003
Control of Materials 31-37, 145, 178, 206, 233, 267, 362, 437, 793, 803, 815, 869, 953, 1054, 1061, 1067, 1071, 1104, 1165, 1189, 1197, 1199, 1203, 1207, 1211-1212, 1234, 1248, 1303, 1306, 1344, 1459
Control of Soil Erosion and Sedimentation 100, 102, 120, 124, 152
Control of Work 23-31, 226, 239, 245, 337, 681, 684, 998, 1005, 1354
Controlled Low Strength Flowable Fill 739-741
Cooperation 24-25, 33, 45, 89
Cooperation by Contractor 24, 89
Copper Pipe 1199-1200
Corrugated Aluminum Alloy 699, 713-714, 721-722, 724-725, 727, 1186-1188
Corrugated Polyethylene Underdrain Pipe 721-722, 724-725, 1185-1186
Corrugated Steel 551-553, 599, 699-700, 706, 717, 722, 727, 1193-1196, 1212, 1218
Corrugated Steel Bridge Plank 551-553, 1218
Corrugated Steel Underdrain Pipe 722, 1195
Cotton 365, 371-372, 405, 410, 459, 498, 517, 535, 542, 557, 743, 1163, 1291-1293, 1327, 1339
Crushed Aggregate Subbase 186, 1131
Crushed Stone Base 20, 250
Crushed Stone Drainage 170, 1103
Cubic Yard 139, 144-145, 147-148, 152, 160, 163-164, 167, 171, 173, 176-177, 181, 184-186, 192, 201-202, 216, 223-225, 231-232, 236-238, 242-243, 253-254, 256-257, 259-260, 329, 373, 411, 416, 426-428, 460, 472, 483, 510-512, 514, 549-551, 740-741, 748, 750-751, 813-814, 821-822, 834, 962-963, 1049, 1056, 1583, 1585
Culverts 8, 56, 144, 156, 159, 167, 187, 491-492, 501, 504, 506, 511, 513-514, 549, 592-595, 598-604, 679, 698-705, 713-716, 720, 755, 764, 1147, 1207
Curb 41, 48, 163, 288, 383, 387-388, 396-402, 421, 424-428, 486, 492, 494-495, 500, 504, 506-507, 510, 560, 582, 591-592, 656, 658, 688, 729, 731, 755, 758, 873, 876, 880, 891, 896, 1044, 1090, 1101
Curing Agents 261, 363-364, 402, 404, 422, 474, 742, 789-790, 870, 964, 1163-1164
Cutback 193-194, 215-216, 226-228, 233, 246, 302, 329, 562, 635, 1136-1138, 1140-1142

D

Deck Drain System 692-693
Deduction 50, 54, 224, 231, 236, 249, 513, 636, 898
Default of Contract 55
Definitions and Terms 1-9, 614, 998, 1005

Delay in Completing Work on Time 53, 1003, 1011
Delineator Posts 830, 832, 1329, 1333-1335
Delineators 830, 833-834, 1333, 1341, 1345-1347
Detour Bridges 19, 681-683, 720
Detours 19, 48, 70, 158-159, 235, 301, 310, 683, 719-721
Deviations 23, 77, 264, 283, 289, 291-294, 300-301, 310-311, 363, 370, 382, 409, 413, 418, 458, 484-485, 526, 540, 587, 632, 689, 755, 782, 1258, 1548
Display and Interior Furnishings 1084
Ditch Checks 128-129
Ditch Excavation 35, 144, 147
Docks 762-764, 1311
Dowel Bars and Tie Bars 401
Drilled Caisson Foundations 49, 638
Drilled Wells 1082
Drop Inlets 8, 130, 957, 959-962, 1261
Duck 124, 517, 535, 542, 557, 1291-1292
Dynamic Testing of Pile 638

E

Edgedrains 724-725
Elastomeric Bearing Pads 515, 673, 732-733, 793, 795, 1249, 1303
Elastomeric Profile Bridge Joint Seals 428, 445
Electrical Conduit 644-645, 835, 870, 964, 979, 982, 986, 1005, 1367-1369, 1373, 1460, 1502, 1556, 1571
Electrical Wire 56, 645, 870, 901, 963-964, 977, 979-994, 1080, 1366-1367, 1373, 1460, 1483, 1502, 1524, 1556
Electrical Work 646, 870, 1079-1081
Eliminated Items 62, 834
Emulsified Asphalt Slurry Seal 333, 347-353
Emulsion 106, 226-227, 233, 246, 302, 314, 322, 333-334, 337, 347-351, 353, 355-358, 1026, 1061-1062, 1139-1146, 1181, 1280-1282, 1284
Epoxy Adhesives 926, 928, 1304
Epoxy Coated Steel Reinforcement 604-607, 693, 803, 815, 1219, 1248
Epoxy Pressure Injection of Concrete Cracks 642-644
Epoxy Resin Adhesives 363, 391, 403, 452, 456, 465, 642, 732-733, 751, 870, 924, 927, 1249, 1304, 1480
Erection 9, 20, 23, 473, 476, 489, 515-517, 522-523, 526, 534-535, 537, 556, 559, 561, 566, 673-674, 715, 733, 736-737, 794, 798, 803, 806-807, 810-811, 814, 843, 849-850, 856, 860-861, 864-865, 876, 888, 1195, 1251, 1259
Erosion Control 3, 18, 41, 46, 48, 100-111, 113, 115, 121-122, 124, 126, 158, 1014, 1042, 1055, 1057, 1063, 1067-1071, 1299, 1313-1316
Erosion Control Check Dams 100-102, 113, 115, 124
Excavation for Minor Structures 149-151
Expanded Mortar 553-556, 559, 598-599, 602, 732, 734, 1180
Expansion Joint 370-371, 408-409, 437, 505, 508, 564, 647, 688, 878
Expansion Plates 515, 517, 557, 1231-1232, 1249-1250
Extension Agreement 4, 18
Extra Work 4, 18-19, 26, 30, 38, 40, 46, 60, 134, 167, 176-177, 206, 633-635, 641, 756, 875, 879
Extruded Aluminum 610, 830, 833, 1327, 1337, 1340, 1445, 1543

F

Failure 5, 14, 17, 23, 26-29, 31-32, 42, 44, 51-54, 65, 90, 92, 121, 438, 440-441, 444, 468, 485, 579, 624, 660, 683, 737, 771, 776, 800, 871, 889, 897-898, 911, 921, 935, 943-944, 946, 1000, 1002-1003, 1007, 1011, 1046, 1108, 1134, 1172, 1174, 1176, 1184, 1214, 1216, 1218, 1256, 1308, 1342, 1384, 1386, 1390-1391, 1416, 1423, 1434-1435, 1438-1439, 1477, 1519, 1549, 1560, 1568, 1574-1575, 1580-1581
Failure to Execute Contract 17
Failure to Maintain Roadway or Structures 31, 683
Fertilizers 34, 1014, 1030, 1035, 1050, 1313-1314
Fiber Optic System 870, 1373, 1460, 1482-1501, 1556, 1578
Fiber Stabilizing Additives 270, 1131-1132, 1148, 1153
Fiberglass Blanket 1061-1063, 1070
Field Fencing 867, 1320, 1323
Field Laboratory 36, 58, 74-78, 206-207, 267, 271, 298, 363, 366, 402, 1248, 1261
Field Laboratory Building 74-78, 206, 267, 363, 402, 1248
Field Office 78, 80, 82-83, 873

Filter Fabric for Embankment Stabilization 460-462, 1298
Final Cleaning Up 20, 41, 48, 626
Final Finishing of Roadway 143
Final Inspection and Acceptance 31, 41, 48, 55
Final Payment 35, 54-55, 64-65, 141
Fine Aggregate for Asphaltic Concrete 302, 338, 1093
Fine Aggregate for Cushion 1090
Fine Aggregate for Portland Cement Concrete 508, 1091
Fine Aggregate for Sand Cement Rip Rap 743
Fire Hydrants 45
Fittings 58, 77, 487, 570, 572, 576, 608, 646-647, 700, 702, 723, 726, 758, 795, 831, 833, 835, 841, 860, 884, 886, 889, 962, 966, 975, 980, 982-984, 988, 1049, 1185, 1189-1190, 1197, 1199-1200, 1202, 1233-1235, 1321, 1324, 1361, 1365, 1368, 1374, 1419, 1433, 1440, 1442, 1457, 1571
Flag Pole 1083
Foamed Asphalt Stabilized Base Course 266
Force Account 4, 18-19, 60-62, 66, 84, 135, 206, 677, 724
Force Account Work 60-62, 66
Forest Protection 39
Full Depth Slab Replacement 445, 456-460

G

Galvanized Steel Sign Posts 1329-1331
Galvanized Steel Structural Shape Posts 830, 834, 1329, 1333
Galvanizing Repair Compound 545, 692, 806, 868, 1286
Gasket Joints 699, 1189-1190
Gaskets 599, 602, 699, 717, 758, 838, 1203-1205, 1207, 1364, 1445
Gate Valves 1203, 1205
Geogrid Materials 1104-1111
Geogrid Reinforcement 464
Graded Aggregate 160-162, 206, 213, 245-250, 254-255, 258, 260-262, 415-416, 474-475, 484, 699-700, 742, 1123-1128
Graded Aggregate Construction 206, 245-250, 258
Grading Complete 165-167, 178, 793
Graffiti Proof Coating for Concrete 1184
Granite Curb 399-401, 1090
Granular Embankment 47, 172-173
Grassing 41, 47-49, 63, 93, 101-102, 104-106, 108, 126, 129, 142, 179, 186, 650, 760-761, 793, 797, 799-801, 842, 844, 859, 862, 870, 901, 974, 1014-1030, 1034, 1049, 1052, 1055, 1057, 1060-1063, 1065, 1068, 1070-1072, 1077, 1299, 1313, 1315, 1326
Grind Concrete 363, 380-383, 402, 456, 469
Grind Concrete Pavement 363, 380-383, 402, 456, 469
Grout Pump 571, 719, 778, 1252
Grout Pumping Equipment 447
Grouting 49, 381, 445-451, 560, 566, 570-571, 575, 577-580, 709-713, 716, 719, 744, 770-771, 777-778, 782, 792, 988-989, 1257, 1304
Grouting Equipment 566, 570-571, 777
Grubbing 35, 41, 46, 48, 88, 101, 130-137, 139, 145-146, 152, 165, 167, 212, 214, 233, 237-238, 678, 753, 759, 793, 797, 800-801, 867, 1045
Guard Rail 18-19, 56, 66, 132, 682, 730, 757-759, 814, 831-832, 1233-1237, 1239, 1244-1245, 1247, 1329
Gutter 41, 48, 163, 191, 288, 322, 383, 424-427, 496, 758, 818, 1044, 1101

H

Handling Materials 34
Handrail 19, 49, 492, 494-495, 505, 507, 582, 594, 607-613, 673, 814
Haul Roads 36, 147, 177, 203-206
Heat Stable Anti-Stripping Additive 270
High Early Strength Concrete 506, 1158
High Level Lighting Systems 963, 977, 994-995, 1080
High Mounting Height Luminaires 1364
High Tensile Strength Bolts 1212-1213
Highway Lighting 20, 49, 869, 901, 963-977, 979, 994, 1005, 1080, 1502
Highway Provisions 38
Highway Signs 40, 614, 753, 756, 829-835, 843-847, 850-851, 855, 869, 899, 972, 1213, 1330, 1332, 1336-1337, 1355, 1357, 1360
Holidays 2, 5, 52, 676
Hot Asphalt-Vulcanized Rubber Seal Treatment 319-322
Hot In-Place Recycled Asphaltic Concrete 312-318
Hot Mix Recycled Asphaltic Concrete 74, 304-311
Hydrated Lime 194, 197, 201, 270, 272-273, 278-279, 284, 298-301, 304, 306, 308-311, 348, 355, 960, 1150, 1179, 1300-1301

I

Illuminated Sign System 835-843, 1080
Imperfect Trench 149-152, 1114-1115
In-Place Embankment 154, 158-160
Information Center Building 1080, 1082
Inoculants 1015, 1314, 1318
Insect Control 41, 84-86
Interpretation of Estimates 10
Iron Pipe 699-701, 764-765, 1189-1190, 1201
Irrigation System 1080, 1083
Item Numbers 24

J

Jacking or Boring Pipe 709, 764, 869, 979
Joint Fillers and Sealers 363-364, 391, 402, 404, 422, 452, 456, 465, 474, 786, 789, 844, 870, 1164-1177, 1373
Jointing 602
Junction Box 648, 839, 885, 961, 963, 968-969, 994, 1010, 1360
Jute Mesh Erosion Control 1067-1070

K

Knots 540, 1036, 1240-1241, 1243-1245, 1319

L

Lead Joints 1189
Legal Regulations and Responsibility to the Public 37-48, 118, 131, 136, 139, 145, 174, 182, 206, 659, 869, 929, 1054, 1327
Liability 16, 25-27, 29-30, 37, 42-44, 49, 61-62, 65-66, 71, 183, 581, 660
Lighting Standards and Towers 964-965, 975-977, 994-995, 1354-1362
Lighting Towers 975-976, 994, 1356
Lime-Fly Ash Soil Construction 257
Limitations 42, 53, 71, 97, 151, 153-154, 180, 216, 227, 264, 277, 279, 330, 335, 340, 350-351, 358, 394, 442, 448, 472, 476, 491-492, 504-506, 593, 750, 1006, 1038, 1122, 1238, 1257, 1289, 1310-1311
Linseed Oil 474, 500, 504-505, 507, 656, 672, 1270, 1272, 1274, 1289
Liquidated Damages 5, 53-55, 64, 662, 1003, 1011
Load Restrictions 42-43, 1055
Local Material Sources 34, 207, 238
Lumber and Timber 102-103, 542-544, 546-547, 828, 1237-1238
Luminaires 647-648, 835-836, 838, 841-842, 844, 870, 963-965, 970, 972-973, 975-978, 994-995, 1080, 1330, 1336-1337, 1354-1355, 1357, 1360, 1362-1366
Lump Sum Construction 203

M

Maintenance During Construction 19, 30
Maintenance of Traffic 19
Manholes 8, 130, 159, 750, 755, 758-759, 957-962, 1178, 1493
Masonry Materials 598, 699, 709, 746, 749, 957, 1047, 1178-1180
Mast Arm Assemblies 830, 832-834, 851, 870, 1327, 1344-1345, 1373, 1460
Material Guaranty 14
Membrane Curing Compound 422, 425, 454, 742, 744, 1163-1164
Merchantable Timber 134
Metal Drain Inlet 730-732
Metal Drain Inlets 729-732
Metal Shell Piling 533, 615-618, 621-623, 628-629, 632-635, 659, 663, 675
Method of Handling Classes of Soils 156
Micro Surfacing 353-360
Microwave Radar Detection 854, 1523, 1546, 1551, 1554
Mill Asphaltic Concrete Pavement 383-386
Mineral Filler 270, 272, 278-279, 303, 347-348, 350-351, 353-356, 445-446, 716-717, 1148, 1153, 1206, 1288, 1301-1302
Mineral Spirits 474, 500, 504, 1274, 1289
Minor Drainage Structures for Detours 719-721
Miscellaneous Bridge Hardware 1232-1233

Miscellaneous Concrete 386, 400, 421-428, 491, 729, 789, 1090-1091
Miscellaneous Drainage Structures 757, 957-963
Miscellaneous Electrical Materials 644-645, 870, 964-965, 1369-1373
Miscellaneous Erosion Control Items 102, 124, 126, 1014, 1299, 1313
Miscellaneous Metals 514, 542, 1232-1233
Miscellaneous Pipe 699-700, 764, 1199-1203
Miscellaneous Planting Materials 102, 185, 1014, 1035, 1054, 1314-1320
Miscellaneous Steel Materials 515, 542, 551, 599, 644-645, 732, 844, 851, 870, 1211-1219
Mitigation Site Construction 174, 1034
Mobile Operations Office 1080, 1084
Mobilization 62, 72-73, 660
Modification of Existing Signs 826
Modular Expansion Joints 436
Monuments and Road Markers 826-827
Mowing 99, 1019-1020, 1023, 1027, 1033, 1039, 1584
Mulch 85, 96-98, 101-106, 108, 110-111, 128, 131, 973, 1015-1016, 1022-1025, 1027-1029, 1032-1033, 1035, 1038-1041, 1043-1046, 1050-1051, 1057, 1065, 1070, 1077, 1314-1316, 1319-1320

N

Navigation 39, 644-650, 1080, 1362, 1365
Navigation Lighting 644-650, 1080, 1362, 1365
Navigation Lighting Luminaires 1365
Nonreinforced Concrete Pipe 699, 958, 1190, 1192
Normal Backfill 150-152, 154, 704, 715, 962
Notice 3-4, 6, 11-14, 16, 22, 26-29, 31, 40-41, 45-46, 48, 50-51, 55, 65, 90, 92, 122-123, 134, 146, 175, 277, 538, 633, 756, 873, 875, 898, 980, 1003, 1012, 1250, 1259-1260, 1317, 1359, 1484, 1486, 1503-1504, 1531, 1534, 1539, 1557, 1578
Nuts 87, 517, 523, 528-529, 531, 534-535, 537, 542, 544, 546, 559, 599-600, 608-609, 611-612, 615, 629, 733-734, 771, 805-808, 831, 833, 840, 846-847, 850, 854, 861, 889, 892, 969, 971, 1207-1209, 1211-1214, 1218, 1233-1235, 1321, 1332, 1340, 1356-1358, 1361, 1419, 1421, 1431-1432, 1440, 1449, 1457, 1517, 1544, 1546, 1564

O

Obliteration of Old Roads 143
Offset Luminaires 1362, 1364
Outdoor Furniture 1079
Overrun in Contract Time 54, 1003

P

Painting Existing Steel Structures 677
Painting Structures 515, 551, 564, 607, 659-678, 706, 732, 803, 815, 869
Painting Traffic Stripe 908-914, 927
Paints for Structural Steel 1269
Patching Portland Cement Concrete Pavement 452-455
Patented Devices 37, 1329
Paved Ditches 388-391, 421, 424-426
Pavement Arrow with Raised Reflectors 927-929
Peat Moss 1318-1319
Pedestrian Overpass Bridge 659
Permanent Anchored Walls 767-782
Permanent Changeable Message Signs 822, 1080, 1578
Permanent Soil Reinforcing Mat 1066
Pile Encasement 614, 633, 693-698
Piling and Round Timber 542, 851, 870, 1239-1244, 1373
Pilot Vehicles 20, 67, 346
Pine Bark 1315, 1319
Pine Seedlings 96-99
Pipe Appurtenances 599, 699, 804, 815, 1189, 1199, 1203-1207
Pipe-Arch 698-705, 713-716, 764
Pits 20, 35, 41, 46, 93-99, 131, 136, 140, 145-147, 156, 158-159, 181, 206, 212, 475, 502, 579, 765-766, 981, 990-991, 1000-1003, 1007-1008, 1014, 1038, 1040, 1043-1044, 1046, 1050-1051, 1054, 1056, 1442, 1446, 1456-1457
Plain Portland Cement Concrete Shoulders 415-421
Plans and Working Drawings 23, 685
Plant Establishment 98-99, 1027, 1029, 1033, 1042-1043, 1046
Plant Inspection 33, 36, 269, 1260
Plant Laboratory 36, 75, 77, 207
Plant Topsoil 143, 185-186, 1015, 1035, 1038-1039, 1045-1046, 1050-1051, 1054-1056, 1314-1315, 1318

Planting Zones 93-96, 1016, 1038, 1042
Plastic Pipe 599
Plastic Sheets 106, 499
Pneumatic Ejector Lift Station 1079-1080
Pneumatically Applied Concrete 789-792
Polymer Concrete 1182-1184, 1451
Porous Material 1047-1049, 1314
Portland Cement Concrete End Dams and Patches 436
Portland Cement Concrete Pavement 221, 247-248, 261, 362-380, 386, 402-416, 422, 445, 452-456, 751, 919-920, 938, 1091, 1126, 1172
Portland Cement Concrete Subbase 261-266, 484
Portland Cement Concrete Whitetopping 460
Post Tensioning 563-580
Post-Tensioning Steel Wire 1219, 1221, 1249
Pot Bearings 732-738
Precast Concrete 63, 400-402, 484, 593, 628, 648, 792, 795, 797, 801-802, 809, 812, 839, 957, 967-968, 1261-1263, 1583
Precast Concrete Header Curb 400-402
Preformed Joint Filler 371, 409, 425, 789, 1165
Preformed Plastic Gaskets 599, 602, 699, 1207
Preformed Plastic Pavement Markings 927-928, 931-941, 949-952
Premolded Asphalt Plank 562, 1146
Prepared Plant Topsoil 1035, 1038-1039, 1045, 1314, 1318
Prequalification of Bidders 10
Preservative Treatment 102-103, 542, 615, 644, 762, 828, 835, 851-852, 863, 1234, 1237, 1239-1240, 1243-1248, 1329
Preservative Treatment of Timber Products 102-103, 542, 615, 644, 762, 828, 835, 851, 863, 1234, 1237, 1239, 1244, 1246-1248, 1329
Pressure Grouting 49, 381, 445-451, 580, 709, 712, 716, 719, 777-778
Pressure Grouting Portland Cement Concrete Pavement 445
Prestressed Concrete Bridge Members 469-470, 499, 514, 556-561, 594, 614, 793, 804, 809, 815, 851, 1221, 1248-1261, 1354
Prestressed Concrete Piling 560, 614-622, 626, 629, 634-636, 1250, 1286
Pretensioning Steel Wire Strand 1219, 1221, 1249-1250
Progress 2, 10, 18, 23-25, 31, 44-45, 49-56, 63-64, 73, 90, 92, 145, 158, 188, 191, 454, 566, 869, 991, 999, 1002, 1005, 1008, 1028, 1034, 1579
Proposal Guaranty 6, 10, 12-14, 16-17
Prosecution and Progress 49, 51, 869, 999, 1005, 1034
Protection and Restoration of Property 40, 118
Protective Concrete Collar for Existing Columns 613
Protective Platforms 580-582
Public 2, 5, 12, 14, 16, 19, 23, 25, 37-48, 51-54, 57-59, 63, 66, 79, 91, 107, 114, 118, 131, 134, 136, 139, 145, 174, 182, 197, 206, 372, 381, 410, 454, 459, 468, 548, 638, 659, 669, 683, 712, 869, 929-930, 1005, 1010, 1054-1055, 1299, 1313, 1327, 1474, 1477, 1519, 1549, 1573, 1580
Pumping Underseal Grout 449
Putty 884, 1206, 1289, 1328

Q

Quality Control 32, 36, 207, 213-214, 219, 269, 278, 282-283, 285-286, 307, 354, 516, 539, 661, 1186, 1246, 1253, 1423

R

Radiographic 515, 539, 674
Railroad 18, 24-26, 38-40, 49, 59, 139, 203, 490, 625, 668-669, 677, 712, 857-858, 875, 912, 921, 939, 947, 1147
Railroad Construction 203, 668
Railroad Grade Separation Structures 18
Raise Existing Bridge 613
Raised Pavement Markers 315, 318, 924-927, 1264-1267, 1304, 1350-1354
Raised Traffic Bars 906-908
Random Clearing and Grubbing 136-137, 145, 165, 233, 753
Rapid Setting Cement Concrete End Dams and Patches 391
Rapid Setting Patching Materials for Portland Cement Concrete 391, 452, 1480-1482
Raw Linseed Oil 1270, 1272, 1274, 1289
Ready Mix Concrete 43, 470, 472, 475
Reclamation of Material Pits 41, 93-99, 131, 145, 206, 1014
Reclamation of Material Pits and Waste Areas 93-99, 131, 145, 206, 1014
Reconstructed Base Course 204, 250-254
Red Primer 535, 1269-1270
Reflective and Nonreflective Characters 830, 1327
Reflective Sheeting Signs 1328

Reflectorizing Materials 78, 828, 830, 870, 927, 1327, 1329, 1341, 1348
Reinforced Concrete Approach Slabs 386-388, 786
Reinforcement and Tensioning Steel 363, 386, 401, 403, 422, 456, 470, 582, 604, 767, 786, 789, 870, 957, 964, 999, 1219-1224, 1249, 1261
Reinforcement Steel 386-387, 469, 488, 490, 492-493, 495, 499-500, 509, 512, 540, 549, 582-584, 586-595, 599-600, 603-604, 607, 629, 631, 633, 689, 691, 767, 783, 803, 815, 844, 847, 975-976, 999, 1002, 1005, 1191, 1248, 1250, 1259
Rejection of Proposals 13
Removal of Miscellaneous Roadway Items 140, 753-757
Removal of Pavement Markings 909, 911, 913, 915, 922, 929-931, 938-939, 942, 948
Removal of Portland Cement Concrete Roadway Slabs 445, 456, 751-753
Removal of Unacceptable and Unauthorized Work 26
Repair of Galvanized Coatings 542, 607, 644, 692, 699, 709, 713, 729, 803, 815, 844, 859, 863, 867-869, 1354
Resident Engineer 25
Responsibility 6, 15-16, 19, 23, 25, 30-31, 34, 37-48, 56, 71, 90, 118, 120, 122, 131, 136, 139, 145, 149, 158, 174, 182, 188, 206, 222, 265, 269, 437-438, 473, 485, 488, 504, 508, 514, 516-517, 523, 534-535, 538, 548, 581, 614, 637, 639, 643, 646, 650, 659, 663, 685, 754, 763, 772, 776, 816, 818, 869, 871, 875, 898, 929, 1005, 1026, 1042, 1054, 1173, 1176, 1299, 1313, 1327, 1461, 1473-1475, 1540, 1542, 1545, 1548, 1569
Rest Area Luminaires 1363
Rest Room Building 1079-1080
Restoration or Alteration of Lakes and Ponds 118-119
Retaining Walls 8, 130, 150, 492, 501, 504, 508, 511, 513-514, 706, 748, 803-822, 958, 1047, 1104, 1147, 1294
Retarding Admixtures 474, 482
Right of Way 27, 93, 130-136, 756, 1043, 1323
Rip Rap 102-104, 106, 108-111, 115, 133, 399, 729-731, 742-746, 1077, 1099-1102, 1294
Rivets 487, 611, 833, 1207, 1209, 1329, 1348
Roads 19, 36, 38, 42, 133, 143, 147, 155, 177, 188-189, 203-206, 510, 518, 1053, 1055, 1087, 1176
Roadway Excavation 138-145, 148, 153, 159, 161, 163-165, 178, 193, 206, 215, 233, 254, 256, 327, 698, 713, 753, 764, 793, 859, 963, 979
Roadway Luminaires 1363
Roadway Materials 100, 148, 153, 160, 172, 181, 193, 258, 1111-1114, 1118, 1130
Rock 80, 93, 97, 102, 107, 109, 111-117, 135, 142-145, 147, 149-150, 153, 156-157, 159-160, 166, 168-169, 228, 322, 349, 511, 709, 738, 770, 772, 775, 777-779, 833, 861, 865-867, 886, 968, 992, 1008, 1059, 1086-1087, 1092, 1096-1097, 1100, 1112-1115, 1122, 1124-1125, 1127, 1132, 1301, 1316
Rock Embankment 153, 159-160, 1113-1114
Root Protection 1047-1049
Rubber Gasket Joints 1189-1190
Rubber Impregnated Cotton Duck 557
Rubber Seal Treatment 319-322, 336
Rubble 746-748, 957, 959, 1047-1049, 1179
Rubble Masonry 746-748, 957, 959, 1047-1049, 1179
Rumble Strips 361-362, 418, 462-464

S

Sample Holes 34
Sand Bituminous Stabilized Base Course 231
Sanitary Sewer 765, 959-962
Sanitary Sewers 952
Sawed Joints in Existing Pavements 428-430
Scales 56-58, 63, 110, 192, 207-209, 218-219, 231, 237, 256, 262, 271, 273, 366, 405, 413, 447, 477-478, 481, 718, 998, 1000-1004, 1008-1011
Scope of Payment 60
Sealing Roadway and Bridge Joints 363, 391, 402, 415, 456, 464-469, 1165
Seamless Steel Pile 1228-1229
Seasonal Limitations 53, 97, 340, 351, 1038
Seed and Sod 93, 102, 973, 976, 1014, 1030, 1310-1313
Seeding 7, 96-99, 105, 141, 1014, 1016, 1018-1025, 1028-1034, 1066, 1069, 1312
Selected Material Surface Course 254-257
Selective Clearing 133
Self-Lubricating Bronze Plates 518, 536, 558
Sewage Pumping Station 1080, 1085
Shear Connectors 506, 513, 515, 517, 526, 595-598
Shop and Working Drawings 646, 1359-1360
Shoring 40, 636-638, 766, 812, 818-820

Shoulder 7, 69, 71, 106, 143, 152, 160-161, 163-164, 178-181, 191, 199-200, 202, 215, 221-225, 230-242, 245-250, 252, 276, 287, 305, 338, 359, 366, 417-421, 447-450, 454, 458, 463-464, 685, 730-731, 752, 824-825, 859, 861, 883, 885-886, 900, 903, 967, 981, 987, 990-991, 993, 996, 1008, 1023, 1053, 1123-1128, 1130, 1150, 1154
Shoulder Materials 178, 180, 249
Sign Blanks and Panels 78, 830, 870, 1327, 1337-1340
Sign Paint 830-831, 1327, 1342-1344
Sign Posts 78, 754, 830, 835, 870, 885, 967, 1244-1245, 1327, 1329-1337
Silt Control Gates 102-103, 108-109, 112-113, 115-116
Silt Filter Bag 1073-1074
Silt Retention Barrier 113, 115-117, 124-126
Siltation Control 41, 142
Slag Cement 1157-1158
Slope Drains 102, 104, 108-109, 111, 421, 423, 427, 727, 1185
Smooth Lined Corrugated Polyethylene (PE) Culvert Pipe 716, 727, 1196-1197
Sod 85, 93, 97, 102, 131, 217, 228, 475, 761, 799, 973, 976, 1014-1016, 1025-1030, 1111, 1310-1313
Soil Aggregate 213, 239-243, 1128-1130
Soil Aggregate Bases 239, 1128-1129
Soil Aggregate Construction 239-243
Soil Base Materials 193, 215, 226, 233, 254, 1118-1123, 1314
Soil-Cement Construction 193, 206, 215-225, 258, 1118
Soil-Lime Construction 193-203
Solar Application 1084
Sound Barriers 792-802, 817-818
Spar Varnish 1289
Special Subgrade Compaction 187-190
Special Subgrade Compaction and Test Rolling 187-190
Special Surface Coating for Concrete 470, 1181-1182, 1184
Special Work 17
Specialty Items 20, 49
Splicing 437, 535, 634, 840, 848, 883-884, 969, 1253, 1486, 1489, 1492, 1494-1495, 1497-1500
Spring Box 961, 963
Square Yard 56, 163-164, 181, 201-202, 216, 224-225, 227, 231-232, 234, 236-238, 242-243, 245, 249-250, 253-254, 257, 265-266, 282, 296-299, 301, 308, 311, 318, 320, 322, 347, 352-353, 358, 360, 378-379, 383, 385-386, 388, 414-415, 420-421, 426-428, 435-436, 455, 462, 510, 512, 550-551, 563, 653-654, 658, 745-746, 752-753, 792, 913-914, 923-924, 930-931, 940-941, 948-949, 952, 997-998, 1026, 1029, 1046, 1060, 1063, 1066-1067, 1069, 1071, 1078, 1312, 1585
Stabilized Base Material for Patching 258-260
Stabilizer Aggregate 160-161, 163-164, 204, 206, 233-235, 237-238, 254-257, 1095-1098
Standard Release Form 55, 64-65
Static Scale System 998-1004, 1006, 1008, 1012, 1080
Steel Bolts 517, 599-600, 608, 611, 615, 629, 1204, 1211-1212, 1235, 1332, 1356, 1358
Steel Forgings 1204, 1225, 1227
Steel Joints 512, 528, 535, 541
Steel Pile 614-615, 634, 830, 1228-1230
Steel Pipe 599, 608, 610, 699-701, 703, 706, 709, 713, 716-717, 721, 727, 729, 765, 847, 1193-1196, 1199-1201, 1355
Steel Plate 552, 733-734, 1194, 1200, 1218, 1449, 1451
Steel Shell Pile 629, 1228-1229
Steel Sign Posts 830, 870, 1329-1331
Storage of Materials 34
Storm Drain Pipe 698-705, 764
Strain Poles 851-857, 869, 871, 875, 883, 888-889, 892, 899, 901, 1373, 1459, 1483, 1502, 1524
Stripping Excavation 35, 214, 237-238
Structural Steel 36-37, 50, 63, 489, 512-515, 517-518, 522-523, 529-530, 534, 536-537, 540-542, 557-558, 567, 595, 598, 608, 617, 646, 663, 665, 670, 673, 677, 732-733, 738, 769, 794, 847, 1211, 1258, 1268-1269, 1331, 1374
Structural Supports for Overhead Signs 835, 843-851
Studs 80, 487, 533, 596, 646-648, 768, 815, 1433, 1458, 1517, 1546
Subgrade Stabilization 160, 162-164, 1299
Substitution of Sources of Materials 35
Supplemental Agreement 4, 9, 18, 21-23, 26, 60, 161, 340, 724, 1035
Surcharge Removal 143-144
Surety 3, 6, 9, 17-18, 37, 43-44, 52-55, 64-65, 67
Surface Finish 214, 366, 368, 381-382, 412, 480, 490, 497-501, 503, 509, 526-527, 535-536, 558, 600, 605, 609, 612, 788, 907, 1214, 1257, 1447, 1456-1457
Survey Aids 86-90

Swaybracing 533, 541, 628, 631-632, 634, 659, 662-663, 669, 675-677, 806

T

Tackifiers 1015
Temporary Silt Fence 102-103, 113, 115-117, 124, 128
Temporary Suspension of Work 52
Test Piles 621-622, 625-626, 633-636, 676
Thermoplastic Traffic Stripe 915-924, 927
Tie Bars 367, 401, 418, 422, 1224
Timber Piling 513, 544, 546, 558, 615, 617-619, 621, 623, 628, 634-636
Timber Poles 852, 854-856, 875, 883, 887, 890, 901, 1239, 1243, 1380, 1402, 1449, 1500
Timber Structures 542-547, 1237
Traffic Control 1, 18-19, 23, 39, 48, 72, 121, 206, 317, 358, 382, 429-430, 433, 456, 458-459, 663, 709, 712, 824-825, 829-830, 835, 844, 869-870, 908, 911, 915, 929, 931-932, 941, 945, 949-950, 952, 996, 1006-1009, 1011, 1083, 1327, 1349, 1373, 1431, 1435-1437, 1460, 1477, 1483, 1495, 1519, 1523, 1549, 1568, 1580
Traffic Impact Attenuator 901-904
Traffic Signal Installation 659, 851, 869-901, 979, 1080, 1373, 1460, 1483, 1522, 1524, 1578
Traffic Stripe 462, 908-924, 927, 931, 938-949, 951
Training Program 90-92, 644, 838, 966, 1079
Travel Trailer Sanitary Disposal Station 1082
Trees 19, 30, 40, 101, 130-134, 137, 797, 882-883, 1034-1038, 1040-1044, 1047-1051, 1240, 1244, 1314, 1317, 1319-1320, 1476
Triangular Silt Barrier 102-104, 114-117, 1075-1077
Truck Weigh Station Communication System 1080
Truck Weigh Station Height Checking Device 1080, 1083
Truck Weigh Station Length Estimating Device 1080, 1084
Truck Weigh Station Traffic Control Signs 1083
Truck Weighing Station Building 1080, 1083
Tubing 611, 770, 840-841, 878, 969-970, 1009, 1186, 1199-1201, 1204, 1207, 1210, 1256, 1370, 1489-1490, 1497
Tunnel Liner 709-713
Turf Establishment 1052-1053
Turpentine 1240, 1243, 1289
Twenty-Four-Hour Accelerated Strength Concrete 550-551

U

Unbalanced Bids 13
Unclassified Excavation 68, 140-141, 145, 149, 189, 329, 801
Underdrains 8, 56, 721-724, 1102, 1195, 1294
Underpass Luminaires 1364-1365
Uniform Traffic Control Devices 1, 19, 663, 709, 712, 829-830, 844, 870, 908, 915, 931-932, 941, 945, 949-950, 1327
Unpaved Shoulders 153, 178-181
Unsuitable Material Excavation 143
Use of Explosives 39-40, 142

V

Vehicle Maintenance Building 1080, 1085
Velocity Dissipators 421, 423, 427-428
Video Detection System 870, 1373, 1489, 1522-1524, 1526-1528, 1530-1531, 1542, 1545, 1548, 1550-1551, 1554

W

Waiver 18, 28-29, 43-44, 55, 63, 66, 899, 1250, 1478, 1573, 1579
Waste Water Treatment Plant 1079-1080
Water Distribution System 963, 1080
Water Reducing Admixtures 474
Water Storage Tanks 1080, 1082
Waterproof Paper 499, 1163
Waterproofing Fabrics 469, 561, 651-653
Weather Limitations 216, 264, 279, 330, 340, 350, 358, 394, 442, 448, 750
Weed Control 1044-1045, 1077-1078, 1334
Welcome Station Building 1080, 1082

Welded Steel Wire Fabric for Concrete Reinforcement 364, 404
Welding 1, 443, 490, 516-517, 523, 529, 532-534, 538-541, 552, 575, 595-597, 609, 628, 663, 673, 676, 717, 733, 735-736, 738, 765, 849, 852-853, 865, 868, 889, 1058, 1105, 1109, 1252, 1259, 1321-1322, 1355-1356, 1422, 1440, 1506
Well Pumps 1080, 1082
Wildflower Seeding 1030-1034
Wood Fence Posts 863, 1244, 1247
Wood Posts and Bracing 126-127, 828, 863, 1244-1245, 1320, 1329
Wood Sign Posts 1244-1245, 1329, 1335
Working Drawings 6, 9, 23, 437, 566, 570-571, 577, 646, 685, 1359-1360
Woven Wire Fence 863, 1320, 1322

Z

Zinc 490, 517, 583, 646, 662, 670-672, 676, 794-795, 836, 847, 849, 1165, 1213-1214, 1269-1273, 1275-1276, 1286-1287, 1321-1323, 1332, 1368, 1374, 1440, 1445, 1456